HYDROLOGY

H18/D9
2 PLANS

H 18/D9

2 PLANS

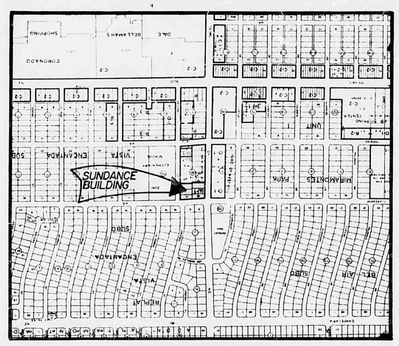

LOCATION MAP

Zone Atlas No. H-18

PLATE 1
SUNDANCE BUILDING
UNDEVELOPED DRAINAGE
ALBUQUERQUE, NEW MEXICO
SCALE: 1" = 20'
78-152

—LEGEND—

Flow Path

BARKER-BOL & ASSOCIATES
CIVIL ENGINEERS
LAND SURVEYORS

JOB NO.
DATE:

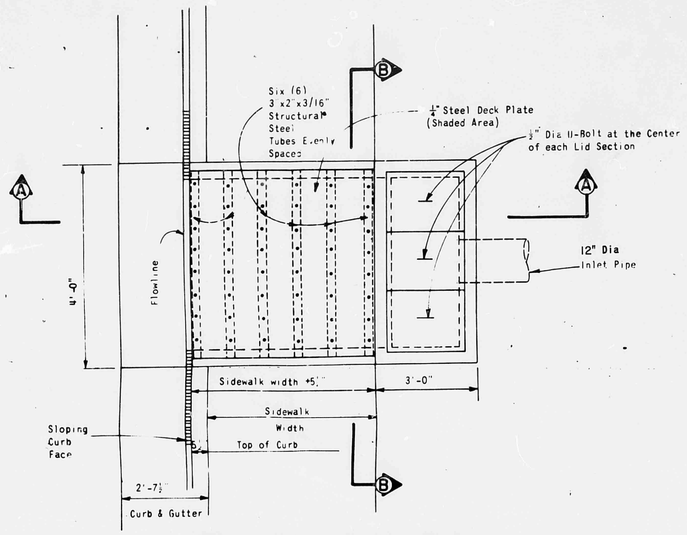

CURB OUTLET PLAN VIEW

NO SCALE

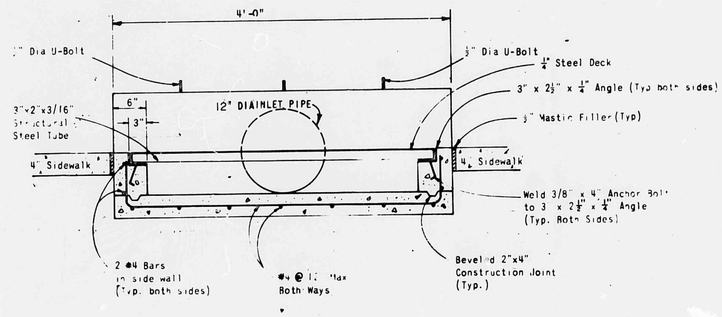

SECTION B-B

NO SCALE

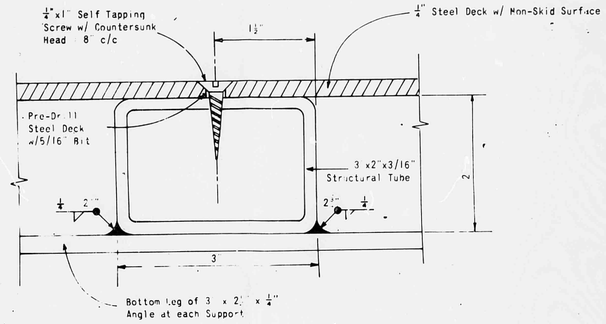

DETAIL M

NO SCALE

NOTES:

1. ALL CONCRETE SHALL BE 3000 PSI 28 DAY STRENGTH W/3/4" AGGREGATE (MAX.)
2. ALL REINFORCING BARS SHALL BE GRADE 60 WITH MINIMUM 1" COVER.
3. SPLICE LENGTH FOR #4 BAR SHALL BE 1'-9".
4. STRUCTURAL BACKFILL SHALL HAVE A MINIMUM OF 90% COMPACTION.

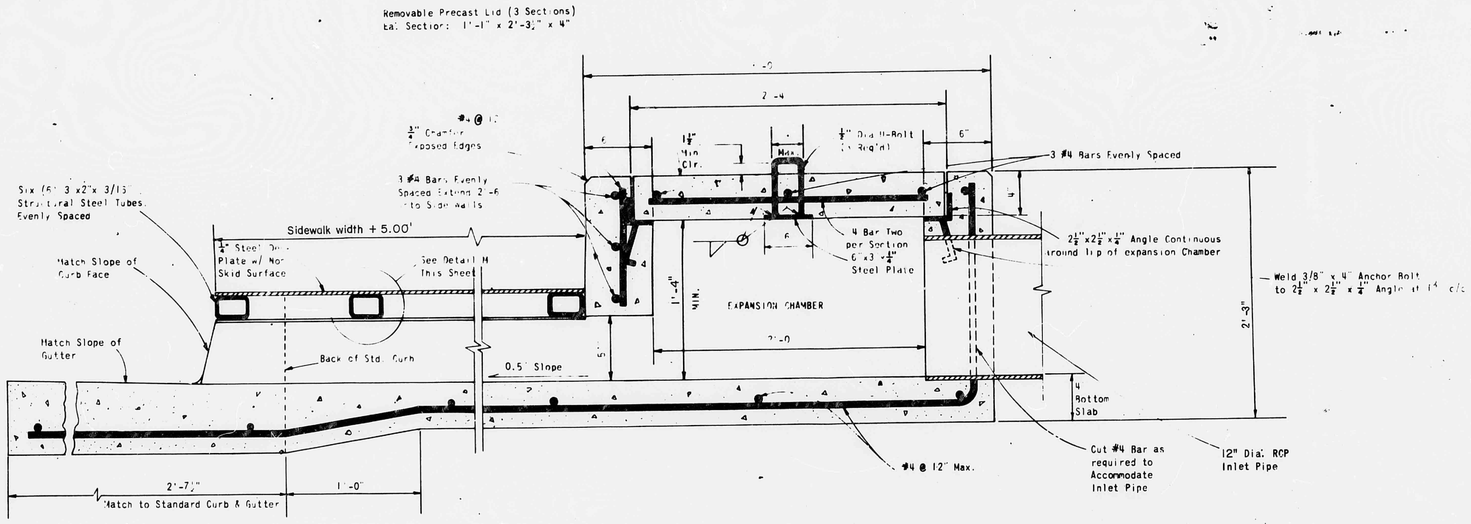

SECTION A-A

NO SCALE

PLATE 3
DRAINAGE REPORT

SUNDANCE BUILDING

CURB OUTLET DETAIL

ALBUQUERQUE, NEW MEXICO

Job No. 78-152	Sheet of
Drawn By	Date SEPT., 1978
Checked By	Scale NO SCALE