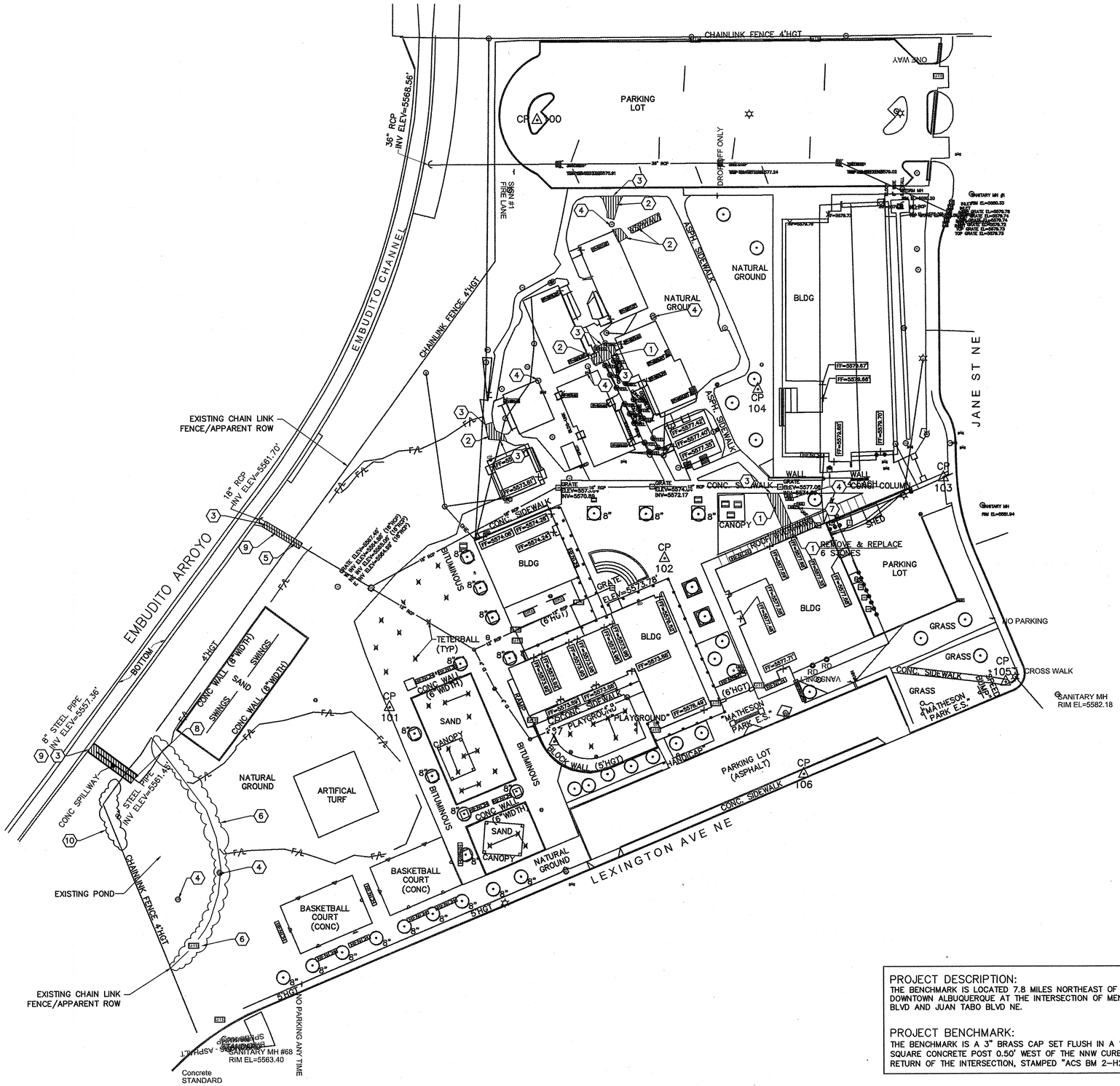


PROJECT DESCRIPTION:
THE BENCHMARK IS LOCATED 7.8 MILES NORTHEAST OF DOWNTOWN ALBUQUERQUE AT THE INTERSECTION OF MENAUL BLVD AND JUAN TABO BLVD NE.

PROJECT BENCHMARK:
THE BENCHMARK IS A 3" BRASS CAP SET FLUSH IN A 1.0' SQUARE CONCRETE POST 0.50' WEST OF THE NNW CURB RETURN OF THE INTERSECTION, STAMPED "ACS BM 2-H21".

## A1 DEMOLITION PLAN
SCALE: 1" = 40'

## GENERAL NOTES

1. WORK ON EMBUDITO CHANNEL, CITY ROW TO BE COMPLETED UNDER SPECIAL ORDER 19 –SO19 PERMITS. SEE SHEET C–403. CONTRACTOR TO CONTACT JASON RODRIGUEZ AT 505–235–8016 PRIOR TO COMMENCING WORK ON CHANNEL TO COORDINATE INSPECTIONS.

## SHEET KEY NOTES

1. REMOVE AND DISPOSE OF 4" PCC SIDEWALK
2. REMOVE AND DISPOSE OF EXISTING ASPHALT
3. SAWCUT NEAT LINE, REMOVE AND DISPOSE
4. ADJUST EXISTING UTILITY TO PROPOSED FINISHED GRADE. SEE SHEET C–102 FOR PROPOSED ELEVATIONS.
5. REMOVE SECTION OF 18" RCP TO ALLOW FOR INSTALLATION OF MANHOLE. SEE SHEET C–102
6. REMOVE AND DISPOSE OF EXISTING CHAINLINK FENCE
7. EXISTING HOT BOX TO REMAIN UNDISTURBED.
8. REMOVE AND DISPOSE OF EXISTING CONCRETE RUNDOWN, INCLUDING 4" PIPE.
9. CONTRACTOR TO GRADE AREA TO MATCH ADJACENT SLOPE. CONTACT AND COORDINATE WITH APS ON–CALL LANDSCAPE CONTRACTOR FOR SOIL AMENDMENT, SODDING AND IRRIGATION ADJUSTMENTS.
10. REMOVE, SALVAGE AND RESET FENCE AS REQUIRED TO CONSTRUCT NEW REINFORCED CONCRETE RETAINING WALL ON SHEET C–402.

## LEGEND

| | |
|---|---|
| PP | POWER POLE |
| | SANITARY MANHOLE |
| | WATER VALVE |
| | FIRE HYDRANT |
| | LIGHTPOLE |
| | TELEPHONE MANHOLE |
| | TRAFFIC SIGN |
| V | VAULT |
| RD | ROOF DRAIN |
| TV | TV PEDESTAL |
| SCB | SPRINKLER CONTROL BOX |
| | DECIDUOUS TREE |
| CO | SANITARY CLEANOUT |
| + 5348.67' | FINISH FLOOR ELEVATION |
| GAS | UNDERGROUND GASLINE |
| UGE | UNDERGROUND ELECTRIC |
| OHE | OVERHEAD ELECTRIC |
| FO | FIBER OPTIC LINE |
| UGTV | UNDERGROUND TV LINE |
| SS | SANITARY SEWER LINE |
| | CURB AND GUTTER |
| 5530 | INDEX CONTOUR |
| | INTERMEDIATE CONTOUR |
| | DEMOLITION LIMITS |


WILSON & COMPANY
4900 Lang Avenue NE
Albuquerque, NM 87109
Phone: (505) 348–4000


CONSULTANTS

SEAL
MARIO G. JUAREZ-INFANTE
NEW MEXICO
15340
6-21-13
PROFESSIONAL ENGINEER

PROJECT NAME
MATHESON PARK ELEMENTARY
SITE IMPROVEMENTS
ALBUQUERQUE, NM

| MARK | DATE | DESCRIPTION |
|---|---|---|

PROJECT NO: 10–600–028–00
DRAWN BY: JLL
CHECKED BY: TJA
SHEET TITLE
DEMOLITION PLAN
SHEET
C–101

RECEIVED
JUN 24 2013
LAND DEVELOPMENT SECTION

H21-D036

1/13

50-19

M:\DGS\10-600-028-00\CADD\SHEETS\02_DEMO\10600028_DEMO.DWG 6/20/2013 11:16 AM

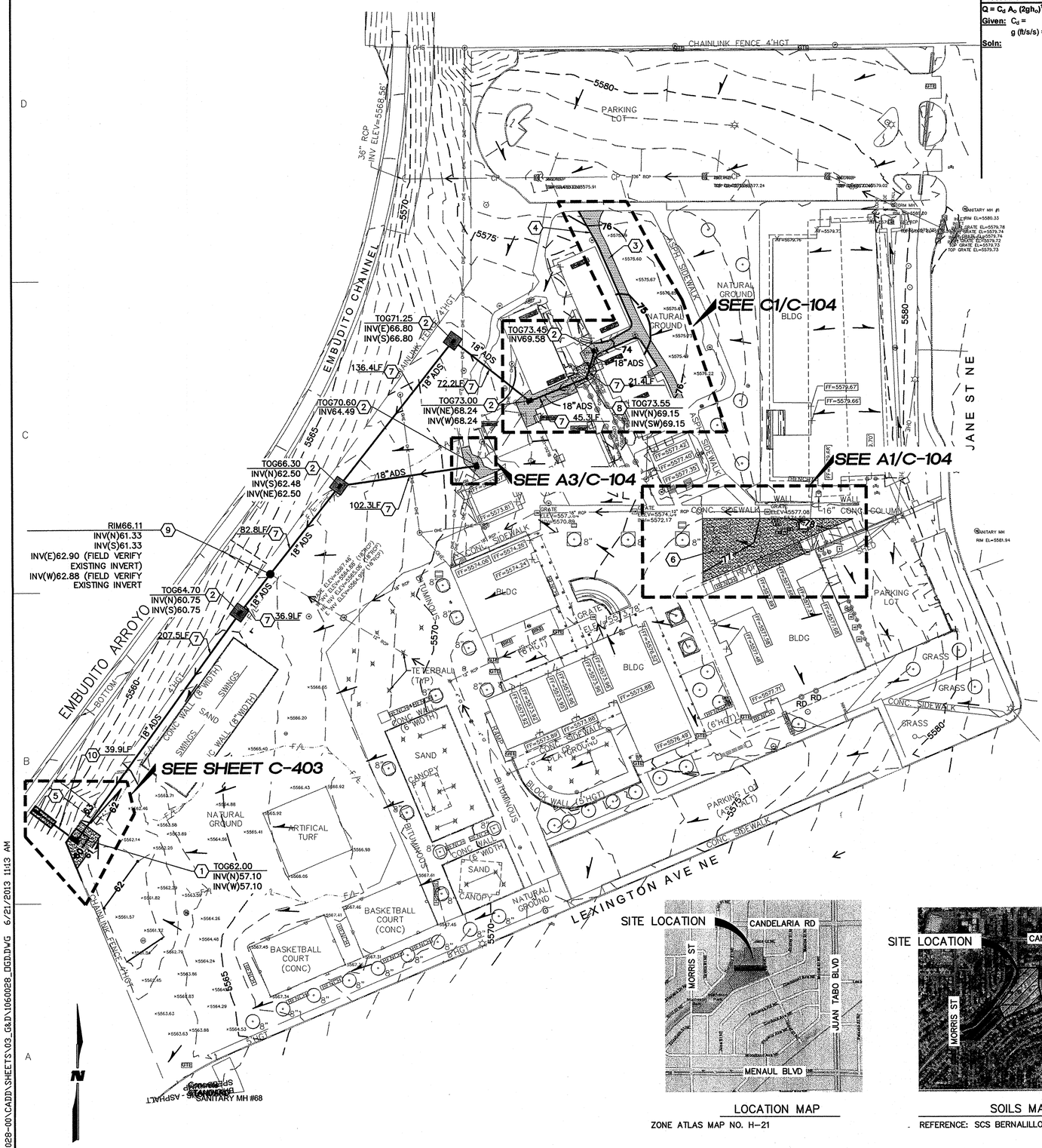


**Procedure for determing "Orfice" discharge (Q) on the Water Quality Structure**

$Q = C_d A_o (2gh_o)^{1/2}$ Orifice Flow (EQ. 7.68, Haestad)

**Given:** $C_d$ = 0.6 **Find:** Outlet Capacity uniform and square-edged openings

g (ft/s/s) = 32.174

**Soln:**

| $Area_1$ (ft^2) | $Area_2$ (ft^2) | $\Delta h_1$ (ft) | $\Delta h_2$ (ft) | $Q_{orifice1}$ ($ft^3/s$) | $Q_{orifice2}$ ($ft^3/s$) | $Q_{total}$ ($ft^3/s$) | |
|---|---|---|---|---|---|---|---|
| 0.09 | 0.09 | 1.167 | 1.67 | 0.45 | 0.54 | 1.00 | |
| 0.09 | 0.09 | 1.167 | 1.67 | 0.45 | 0.54 | 1.00 | |
| 0.09 | 0.09 | 1.167 | 1.67 | 0.45 | 0.54 | 1.00 | |
| 0.09 | 0.09 | 1.167 | 1.67 | 0.45 | 0.54 | 1.00 | |
| 0.09 | 0.09 | 1.167 | 1.67 | 0.45 | 0.54 | 1.00 | |
| 0.09 | 0.09 | 1.167 | 1.67 | 0.45 | 0.54 | 1.00 | |
| 0.09 | 0.09 | 1.167 | 1.67 | 0.45 | 0.54 | 1.00 | |
| 0.09 | 0.09 | 1.167 | 1.67 | 0.45 | 0.54 | 1.00 | |
| 0.09 | 0.09 | 1.167 | 1.67 | 0.45 | 0.54 | 1.00 | |
| 0.09 | 0.09 | 1.167 | 1.67 | 0.45 | 0.54 | 1.00 | |
| | | | | | | **10.95** | (22) 4in diameter |

## GENERAL NOTES

1. ALL CONNECTIONS BETWEEN NEW AND OLD CONCRETE ON SITE SHALL BE CONSTRUCTED PER DETAIL C3/C-501.
2. ALL CONNECTIONS BETWEEN NEW AND OLD ASPHALT SHALL BE CONSTRUCTED PER DETAIL C4/C-501.
3. ALL CONNECTIONS BETWEEN NEW AND OLD CONCRETE FOR EMBUDITO ARROYO SHALL BE CONSTRUCTED PER SHEET C-503.
4. WORK ON EMBUDITO CHANNEL, CITY ROW TO BE COMPLETED UNDER SPECIAL ORDER 19 – S019 PERMITS. SEE SHEET C-403. CONTRACTOR TO CONTACT JASON RODRIGUEZ AT 505-235-8016 PRIOR TO COMMENCING WORK ON CHANNEL TO COORDINATE INSPECTIONS.

## SHEET KEY NOTES

1. INSTALL 1-MODIFIED WATER QUALITY INLET. SEE DETAIL A1/C-502.
2. INSTALL 1-SGL TYPE "D" INLET. SEE DETAIL C1/C-504.
3. INSTALL 2" ASPHALT. SEE DETAIL B5/C-501.
4. INSTALL 8" TEMPORARY ASPHALT CURB. SEE DETAIL C1/C-505.
5. INSTALL CHANNEL PENETRATION. SEE SHEET C-503.
6. INSTALL 4" PCC SIDEWALK. SEE DETAIL A5/C-501.
7. INSTALL 18" DIA ADS N-12 WT STORM DRAIN PIPE.
8. INSTALL 12" DIA ADS INLET. SEE DETAIL A4/C-501.
9. INSTALL 1-6' DIA TYPE "C" MANHOLE. SEE DETAIL C3/C-502.
10. INSTALL 24" DIA RCP STORM DRAIN PIPE.

## LEGEND

| | |
|---|---|
| PP | POWER POLE |
| | SANITARY MANHOLE |
| | WATER VALVE |
| | FIRE HYDRANT |
| | LIGHTPOLE |
| | TELEPHONE MANHOLE |
| | TRAFFIC SIGN |
| V | VAULT |
| RD | ROOF DRAIN |
| TV | TV PEDESTAL |
| SCB | SPRINKLER CONTROL BOX |
| | DECIDUOUS TREE |
| CO | SANITARY CLEANOUT |
| + 5348.67' | FINISH FLOOR ELEVATION |
| | UNDERGROUND GASLINE |
| UGE | UNDERGROUND ELECTRIC |
| OHE | OVERHEAD ELECTRIC |
| FO | FIBER OPTIC LINE |
| UGTV | UNDERGROUND TV LINE |
| SS | SANITARY SEWER LINE |
| | CURB AND GUTTER |
| 5530 | INDEX CONTOUR |
| | INTERMEDIATE CONTOUR |
| | PROPOSED STORM DRAIN PIPE |
| | PROPOSED STORM INLET |
| TSXX.XX | PROPOSED SPOT ELEVATION |
| TS | TOP OF SIDEWALK |
| TC | TOP OF CURB |
| FL | FLOW LINE ELEV. |
| | PROPOSED 2" ASPHALT |
| | 4" CONCRETE |
| | DIRECTION OF FLOW |
| | PIPE FLOW DIRECTION |

PROJECT DESCRIPTION:
THE BENCHMARK IS LOCATED 7.8 MILES NORTHEAST OF DOWNTOWN ALBUQUERQUE AT THE INTERSECTION OF MENAUL BLVD AND JUAN TABO BLVD NE.

PROJECT BENCHMARK:
THE BENCHMARK IS A 3" BRASS CAP SET FLUSH IN A 1.0' SQUARE CONCRETE POST 0.50' WEST OF THE NNW CURB RETURN OF THE INTERSECTION, STAMPED "ACS BM 2-H21".




LOCATION MAP
ZONE ATLAS MAP NO. H-21

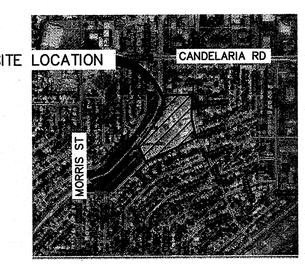


SOILS MAP
REFERENCE: SCS BERNALILLO COUNTY SOIL SURVEY

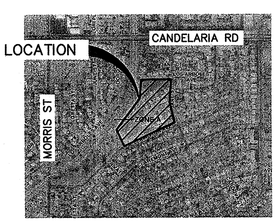


FLOOD INSURANCE MAP
REFERENCE: FLOOD INSURANCE STUDY PANEL 35001C0357G

# A1 OVERALL GRADING AND DRAINAGE PLAN
SCALE: 1" = 40'


WILSON & COMPANY
4900 Lang Avenue NE
Albuquerque, NM 87109
Phone: (505) 348-4000


CONSULTANTS

SEAL
MARIO G. JUAREZ-INFANTE
NEW MEXICO
15340
6-21-13
PROFESSIONAL ENGINEER

PROJECT NAME
MATHESON PARK ELEMENTARY
SITE IMPROVEMENTS
ALBUQUERQUE, NM

| MARK | DATE | DESCRIPTION |
|---|---|---|

PROJECT NO: 10-600-028-00
DRAWN BY: JLL
CHECKED BY: TJA
SHEET TITLE
OVERALL GRADING & DRAINAGE PLAN
SHEET
C-102

RECEIVED
JUN 24 2013
LAND DEVELOPMENT SECTION

2/13

5019

M:\DS\10-600-028-00\CADD\SHEETS\03_G&D\1060028_OGD.DWG 6/21/2013 11:13 AM

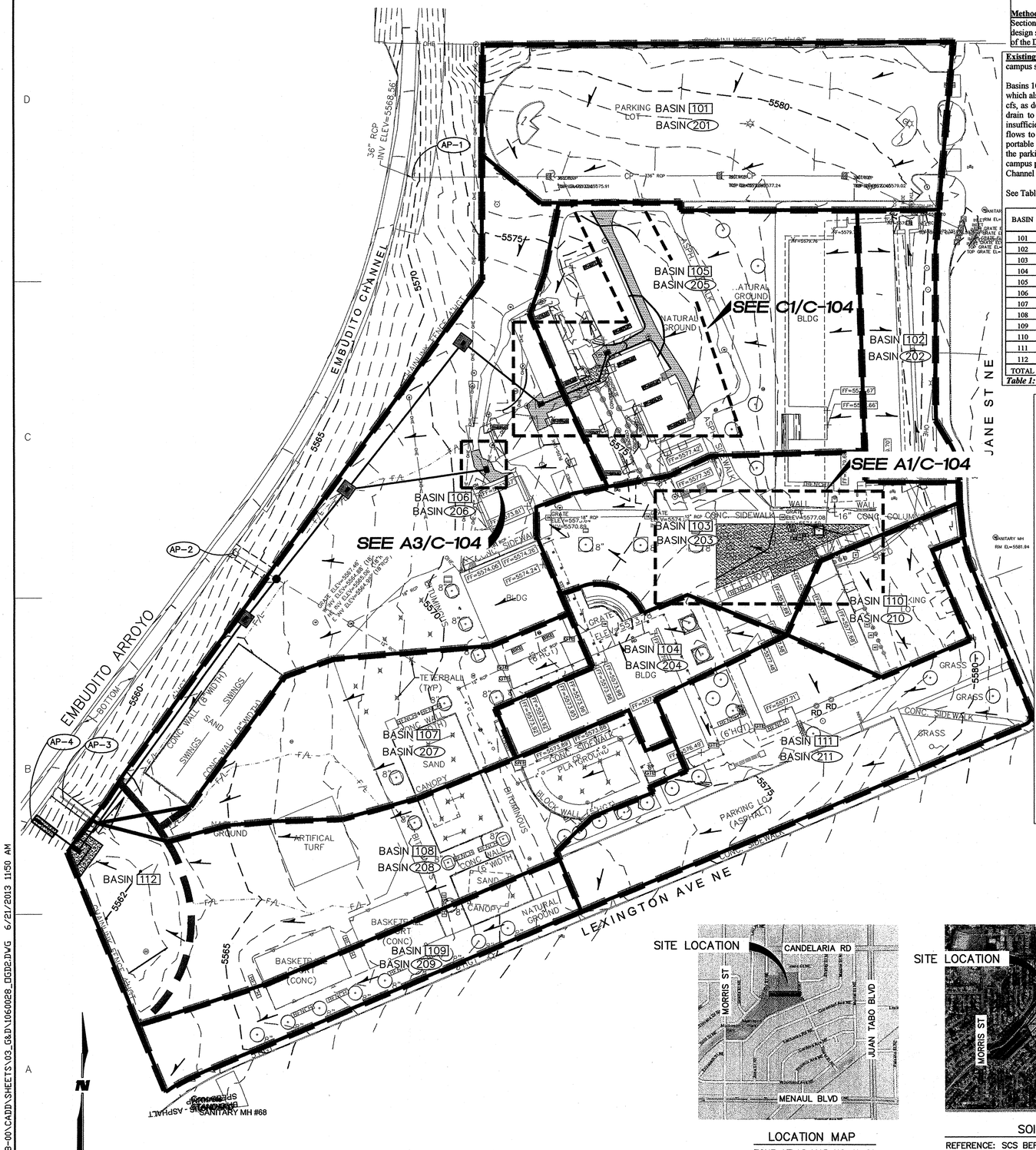


**Site Location & Project Description:** Location of Matheson Park Elementary School at 10809 Lexington NE, the project encompasses the majority of the campus. This project's purpose is to resolve existing drainage deficiencies including removing the existing pond.

**Methodology:** The AHYMO computer program was used to calculate design flows. This software adheres to Section 22.2 of the City of Albuquerque DPM. The 100-year, 24-hour and 100-year, 6-hour storm event were the design storms computed for the improvements. The site is located in Precipitation Zone 4 as designated in Table A-1 of the DPM. All basins were delineated using AutoCAD software to determine areas.

**Existing Conditions:** The site is a combination of mildly compacted soil, asphalt and concrete paving and campus structures. The existing topography slopes generally from the northeast to the southwest with mild slopes.

Basins 101's and 102's flows are conveyed to the Embudito Channel by means of 36" RCP channel penetration (*AP-1*) which also conveys flows from an off-site storm drain network. The 36" RCP discharges 55.4 cfs with a capacity of 94 cfs, as described in the Phase I Drainage Report by Red Mountain Engineers, Inc. in June, 1996. Basin 103 and 104 drain to the Embudito Channel by means of an 18 inch storm drain channel penetration (*AP-2*). Basin 103 has insufficient grade adjacent to doorways; ice builds up in the winter months causing a slipping hazard. Basin 105 surface flows to the southwest to Basin 106. Basin 106 surface flows to the pond. Basin 105 has insufficient grade in the portable park concrete walkways resulting in pooling. Basins 107 and 108 surface flow to the pond. Basin 110 drains to the parking lot in Basin 111. Basins 109, 110 and 111 surface flow to Lexington Ave NE. Basin 112 consists of the campus pond, enclosed by chain-link fencing. The pond acts as a sediment control structure and drains to the Embudito Channel by means of a concrete rundown / weir (*AP-3*) with a crest elevation of 5562.65. No off-site flows are present.

See Table 1 for Existing Hydrologic conditions, and the Grading and Drainage Plan for basin boundaries.

| BASIN | AREA | | LAND TREATMENT (%) | | | | $Q_{E(100-6)}$ | $V_{(100-24)}$ |
|---|---|---|---|---|---|---|---|---|
| | ACRE | SM | A | B | C | D | (cfs) | (ac-ft) |
| 101 | 0.9067264 | 0.00141676 | 0 | 0 | 8 | 92 | 3.86 | 0.2001 |
| 102 | 0.2571166 | 0.00040174 | 0 | 0 | 0 | 100 | 1.12 | 0.0596 |
| 103 | 0.5402433 | 0.00084413 | 0 | 0 | 19 | 81 | 2.23 | 0.1110 |
| 104 | 0.2714646 | 0.00042416 | 0 | 3 | 2 | 95 | 1.17 | 0.0608 |
| 105 | 0.9447658 | 0.00147620 | 0 | 0 | 47 | 53 | 3.54 | 0.1571 |
| 106 | 1.1950643 | 0.00186729 | 0 | 9 | 66 | 25 | 3.96 | 0.1487 |
| 107 | 0.5523186 | 0.00086300 | 0 | 9 | 44 | 47 | 2.00 | 0.0857 |
| 108 | 0.7465335 | 0.00116646 | 0 | 8 | 49 | 43 | 2.66 | 0.1119 |
| 109 | 0.3200413 | 0.00050006 | 0 | 4 | 76 | 20 | 1.06 | 0.0381 |
| 110 | 0.2293848 | 0.00035841 | 0 | 0 | 0 | 100 | 1.00 | 0.0532 |
| 111 | 0.7560147 | 0.00118127 | 0 | 22 | 4 | 74 | 2.92 | 0.1433 |
| 112 | 0.2063361 | 0.00032240 | 0 | 0 | 100 | 0 | 0.64 | 0.0191 |
| TOTAL | 6.92601 | 0.01082189 | | | | | 26.16 | 1.1886 |

*Table 1: Existing Hydrology*

**Proposed Conditions:** The proposed site includes asphalt paving, concrete paving, inlet and storm drain installation. The pond will be removed to allow the space to be utilized in recreational activities for students. Basins 101, 102, 104, 109, 110 and 111 will remain as-is, draining per existing conditions. In Basin 203 portions of the sidewalk will be removed and replaced along with paving the existing gravel courtyard.. Basin 205's and 206's Land Treatments will see increases in Type D due to asphalt paving which will direct flows to the proposed storm drain network discharging to the Embudito Channel. In addition, this takes into consideration the Master Plan done by SMPC Architects in 1995. Phase 3 and Phase 4 Future Classrooms and associated walkways in between the proposed classrooms are treated as Land Treatment Type D. The construction of Phase 4 classrooms will include removing the upstream-most three inlets. Basins 207 and 208 will largely remain unchanged, with the exception of increasing in size due to the removal of the pond (Basin 112). Basins 206, 207 and 208's flows merge together and will be filtered by means of a water quality manhole and be discharged into the Embudito Channel (*AP-3*). Basin 112 is now part of Basins 206, 207 and 208.See Table 3 for Analysis Point data pertaining to Existing & Proposed Conditions, based on the 100-year, 6-hour storm event.

See Table 2 for Proposed Hydrologic conditions. See Grading and Drainage Plan for basin boundaries.

| BASIN | AREA | | LAND TREATMENT (%) | | | | $Q_{E(100-6)}$ | $V_{(100-24)}$ |
|---|---|---|---|---|---|---|---|---|
| | ACRE | SM | A | B | C | D | (cfs) | (ac-ft) |
| 201 | 0.9067264 | 0.00141676 | 0 | 0 | 8 | 92 | 3.86 | 0.2001 |
| 202 | 0.2571166 | 0.00040174 | 0 | 0 | 0 | 100 | 1.12 | 0.0596 |
| 203 | 0.5402433 | 0.00084413 | 0 | 0 | 0 | 100 | 2.35 | 0.1253 |
| 204 | 0.2714646 | 0.00042416 | 0 | 3 | 2 | 95 | 1.17 | 0.0608 |
| 205 | 0.9447658 | 0.00147620 | 0 | 0 | 0 | 100 | 4.11 | 0.2191 |
| 206 | 1.2039945 | 0.00188124 | 0 | 8 | 60 | 32 | 4.11 | 0.1619 |
| 207 | 0.5663682 | 0.00088495 | 0 | 9 | 45 | 46 | 2.04 | 0.0871 |
| 208 | 0.9300735 | 0.00145324 | 0 | 6 | 58 | 36 | 3.24 | 0.1309 |
| 209 | 0.3200413 | 0.00050006 | 0 | 4 | 76 | 20 | 1.06 | 0.0381 |
| 210 | 0.2293848 | 0.00035841 | 0 | 0 | 0 | 100 | 1.00 | 0.0532 |
| 211 | 0.7560147 | 0.00118127 | 0 | 22 | 4 | 74 | 2.92 | 0.1433 |
| TOTAL | 6.92619 | 0.01082218 | | | | | 26.98 | 1.2794 |

*Table 2: Proposed Hydrology*

| ANALYSIS POINT | EXISTING $Q_{E(100-6)}$ | PROPOSED $Q_{E(100-6)}$ |
|---|---|---|
| AP-1 | 55.4 cfs | 55.4 cfs |
| AP-2 | 3.4 cfs | |
| AP-3 | 12.8 cfs | |
| AP-4 | | 17.02 cfs |

*Table 3: Analysis Points*

**Conclusion:** Project improvements will alleviate current drainage issues while removing the current pond to allow the school to have more recreational space for outdoor activities. Due to minor paving necessary to resolve the pooling issues and future planning, the site will have an increase in Land Treatment Type D and thus will see the peak discharge increase by 0.82 cfs.




LOCATION MAP
ZONE ATLAS MAP NO. H-21

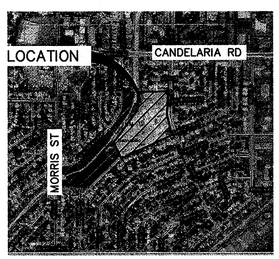


SOILS MAP
REFERENCE: SCS BERNALILLO COUNTY SOIL SURVEY

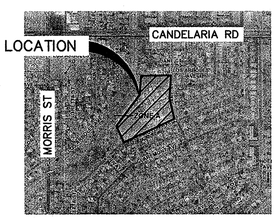


FLOOD INSURANCE MAP
REFERENCE: FLOOD INSURANCE STUDY
PANEL 35001C0357G

## A1 BASIN MAP
SCALE: 1" = 40'

## LEGEND

| | |
|---|---|
| PP | POWER POLE |
| | SANITARY MANHOLE |
| | WATER VALVE |
| | FIRE HYDRANT |
| | LIGHTPOLE |
| | TELEPHONE MANHOLE |
| | TRAFFIC SIGN |
| V | VAULT |
| | ROOF DRAIN |
| TV | TV PEDESTAL |
| SCB | SPRINKLER CONTROL BOX |
| | DECIDUOUS TREE |
| | SANITARY CLEANOUT |
| 5348.67 | FINISH FLOOR ELEVATION |
| | UNDERGROUND GASLINE |
| UGE | UNDERGROUND ELECTRIC |
| OHE | OVERHEAD ELECTRIC |
| FO | FIBER OPTIC LINE |
| UGTV | UNDERGROUND TV LINE |
| SS | SANITARY SEWER LINE |
| | CURB AND GUTTER |
| 5530 | INDEX CONTOUR |
| | INTERMEDIATE CONTOUR |
| | PROPOSED STORM DRAIN PIPE |
| | PROPOSED STORM INLET |
| | PROPOSED BASIN BOUNDARY |
| | EXISTING BASIN BOUNDARY |
| BASIN 211 | PROPOSED BASIN IDENTIFICATION |
| BASIN 111 | EXISTING BASIN IDENTIFICATION |
| | PROPOSED 2" ASPHALT |
| | 4" CONCRETE |
| | DIRECTION OF FLOW |


WILSON & COMPANY
4900 Lang Avenue NE
Albuquerque, NM 87109
Phone: (505) 348-4000


CONSULTANTS

SEAL

PROJECT NAME
MATHESON PARK ELEMENTARY
SITE IMPROVEMENTS
ALBUQUERQUE, NM

| MARK | DATE | DESCRIPTION |
|---|---|---|
| | | |

PROJECT NO: 10-600-028-00
DRAWN BY: JLL
CHECKED BY: TJA
SHEET TITLE
BASIN MAP

SHEET
C-103


RECEIVED JUN 24 2013 LAND DEVELOPMENT SECTION


3/13

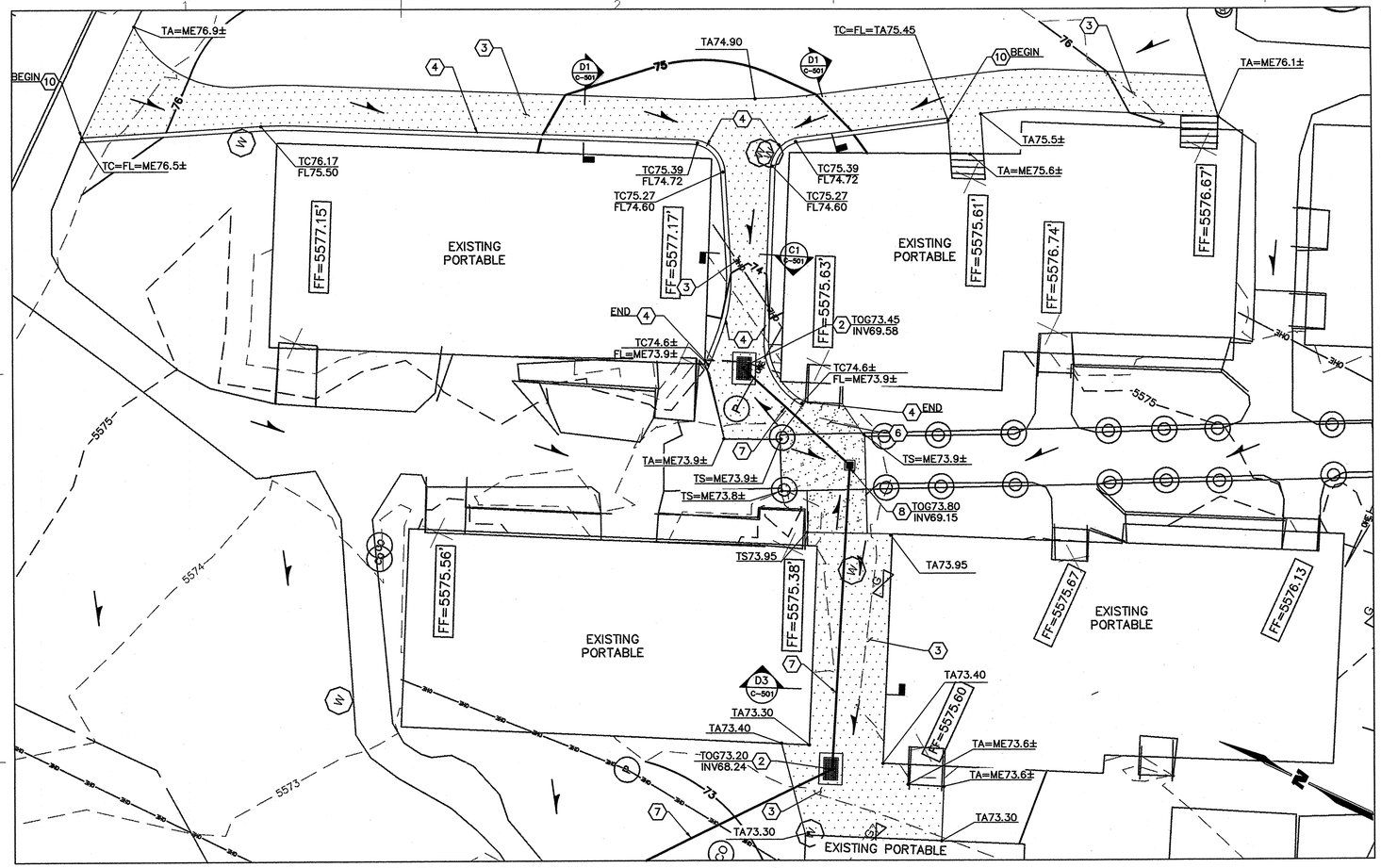


## C1 GRADING AND DRAINAGE PLAN–PORTABLE WALKWAYS

SCALE: 1" = 10'

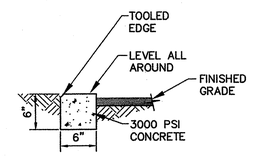


## C4 MOW STRIP

SCALE: NTS

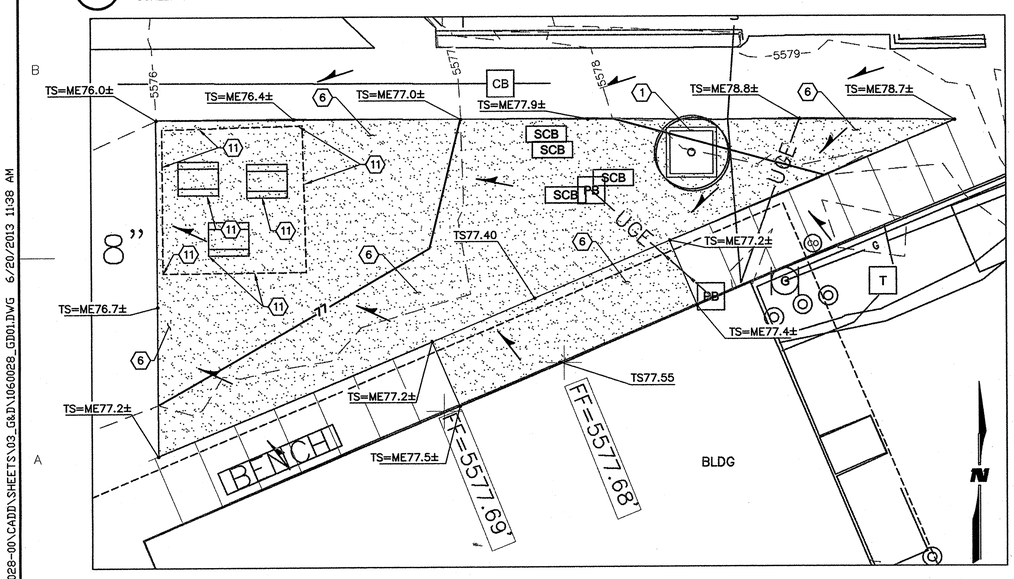


## A1 GRADING AND DRAINAGE PLAN–MAIN COURTYARD

SCALE: 1" = 10'

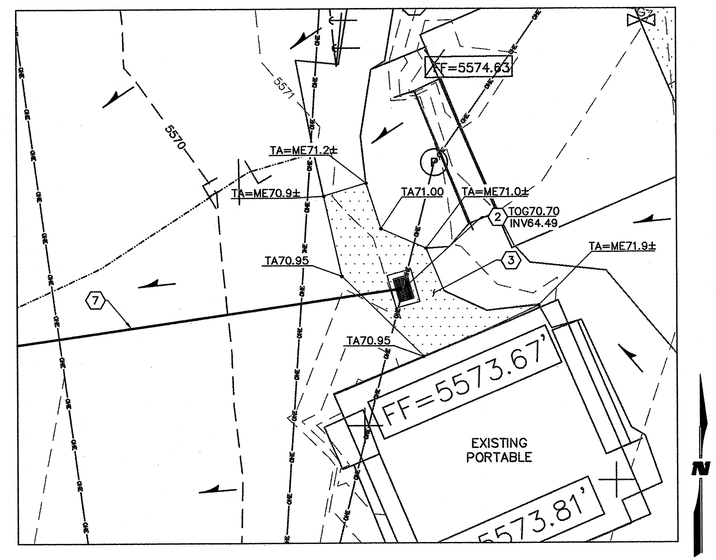


## A3 GRADING AND DRAINAGE PLAN–WALKWAY

SCALE: 1" = 10'

## GENERAL NOTES

1. ALL CONNECTIONS BETWEEN NEW AND OLD CONCRETE SHALL BE CONSTRUCTED PER DETAIL C3/C-501.
2. ALL CONNECTIONS BETWEEN NEW AND OLD ASPHALT SHALL BE CONSTRUCTED PER DETAIL C4/C-501.

## SHEET KEY NOTES

1. INSTALL MOW STRIP AROUND PLANTER. SEE DETAIL C4 THIS SHEET.
2. INSTALL 1-SGL TYPE "D" INLET. SEE DETAIL C1/C-504.
3. INSTALL 2" ASPHALT. SEE DETAIL B5/C-501.
4. INSTALL 8" TEMPORARY ASPHALT CURB. SEE DETAIL C1/C-505.
5. INSTALL CHANNEL PENETRATION. SEE SHEET C-503.
6. INSTALL 4" PCC SIDEWALK. SEE DETAIL A5/C-501.
7. INSTALL 18" DIA N-12 WT ADS STORM DRAIN PIPE.
8. INSTALL 12" ADS INLET. SEE DETAIL A4/C-501.
9. INSTALL 1-6' DIA TYPE "C" MANHOLE. SEE DETAIL C3/C-502.
10. TRANSITION TO 8" TEMPORARY ASPHALT CURB. SEE DETAIL D4/C-501.
11. INSTALL EXPANSION JOINT AROUND CANOPY POSTS AND TABLE POSTS.

## LEGEND

| | |
|---|---|
| PP | POWER POLE |
| | SANITARY MANHOLE |
| | WATER VALVE |
| | FIRE HYDRANT |
| | LIGHTPOLE |
| | TELEPHONE MANHOLE |
| | TRAFFIC SIGN |
| | VAULT |
| | ROOF DRAIN |
| TV | TV PEDESTAL |
| SCB | SPRINKLER CONTROL BOX |
| | DECIDUOUS TREE |
| | SANITARY CLEANOUT |
| 5348.67' | FINISH FLOOR ELEVATION |
| GAS | UNDERGROUND GASLINE |
| UGE | UNDERGROUND ELECTRIC |
| OHE | OVERHEAD ELECTRIC |
| FO | FIBER OPTIC LINE |
| UGTV | UNDERGROUND TV LINE |
| SS | SANITARY SEWER LINE |
| | CURB AND GUTTER |
| 5530 | INDEX CONTOUR |
| | INTERMEDIATE CONTOUR |
| | PROPOSED STORM DRAIN PIPE |
| | PROPOSED STORM INLET |
| | PROPOSED BASIN BOUNDARY |
| | EXISTING BASIN BOUNDARY |
| BASIN 111 | BASIN IDENTIFICATION |
| TSXX.XX | PROPOSED SPOT ELEVATION |
| TS | TOP OF SIDEWALK |
| TC | TOP OF CURB |
| FL | FLOW LINE ELEV. |
| TA | TOP OF ASPHALT |
| | PROPOSED 2" ASPHALT |
| | 4" CONCRETE |
| | DIRECTION OF FLOW |

RECEIVED JUN 24 2013 LAND DEVELOPMENT SECTION

4/13

WILSON & COMPANY
4900 Lang Avenue NE
Albuquerque, NM 87109
Phone: (505) 348-4000

CONSULTANTS

SEAL

MARIO C. JUAREZ-INFANTE NEW MEXICO 15340 10-21-13 PROFESSIONAL ENGINEER

PROJECT NAME
MATHESON PARK ELEMENTARY
SITE IMPROVEMENTS
ALBUQUERQUE, NM

| MARK | DATE | DESCRIPTION |
|---|---|---|

PROJECT NO: 10-600-028-00
DRAWN BY: JLL
CHECKED BY: TJA
SHEET TITLE
GRADING & DRAINAGE PLAN
SHEET
C-104

M:\DS\10-600-028-00\CADD\SHEETS\03_G&D\060028_GD01.DWG 6/20/2013 11:38 AM

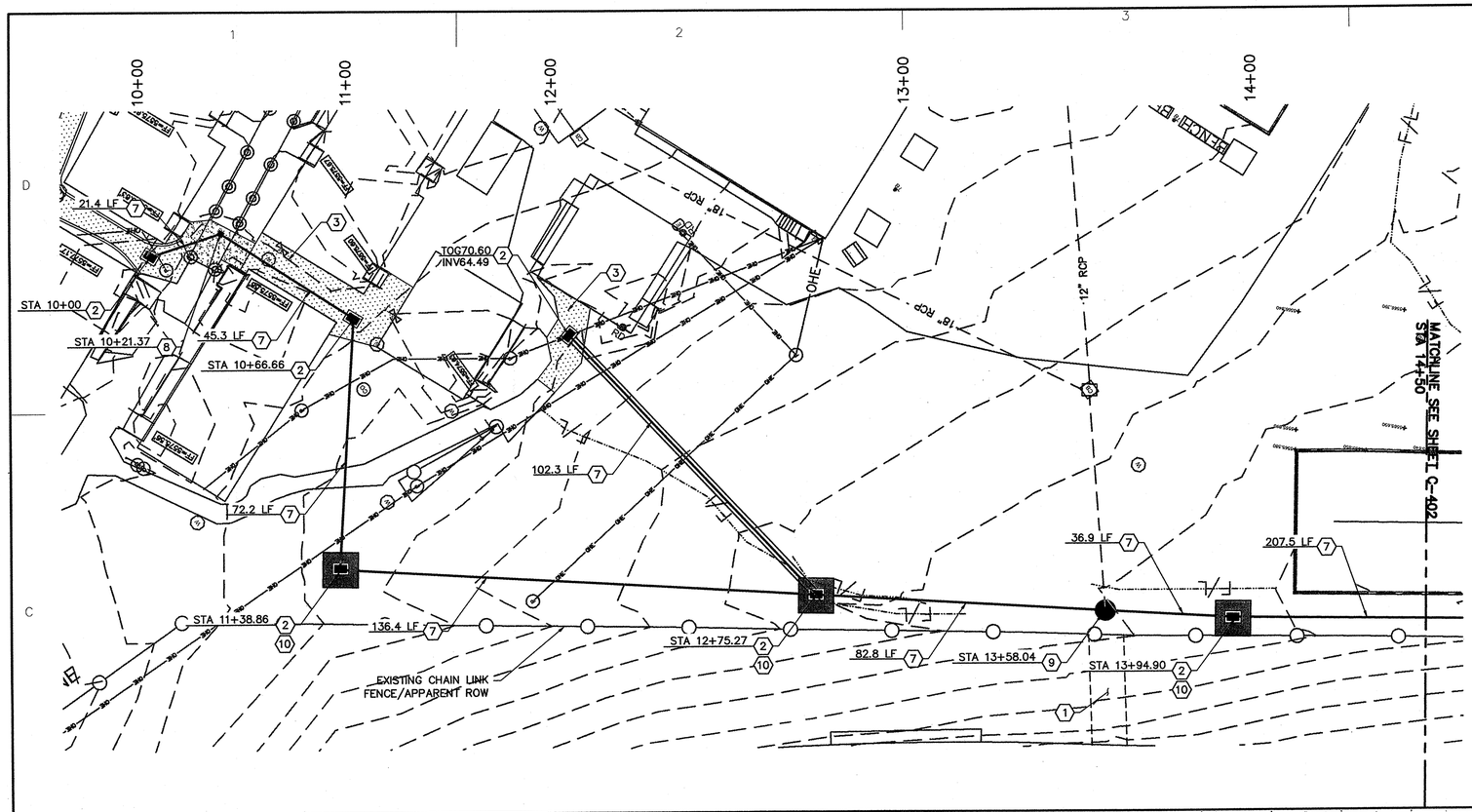


PLAN: SCALE: 1"=20'

PROFILE: SCALE: 1"=20' HORZ SCALE: 1"=5' VERT

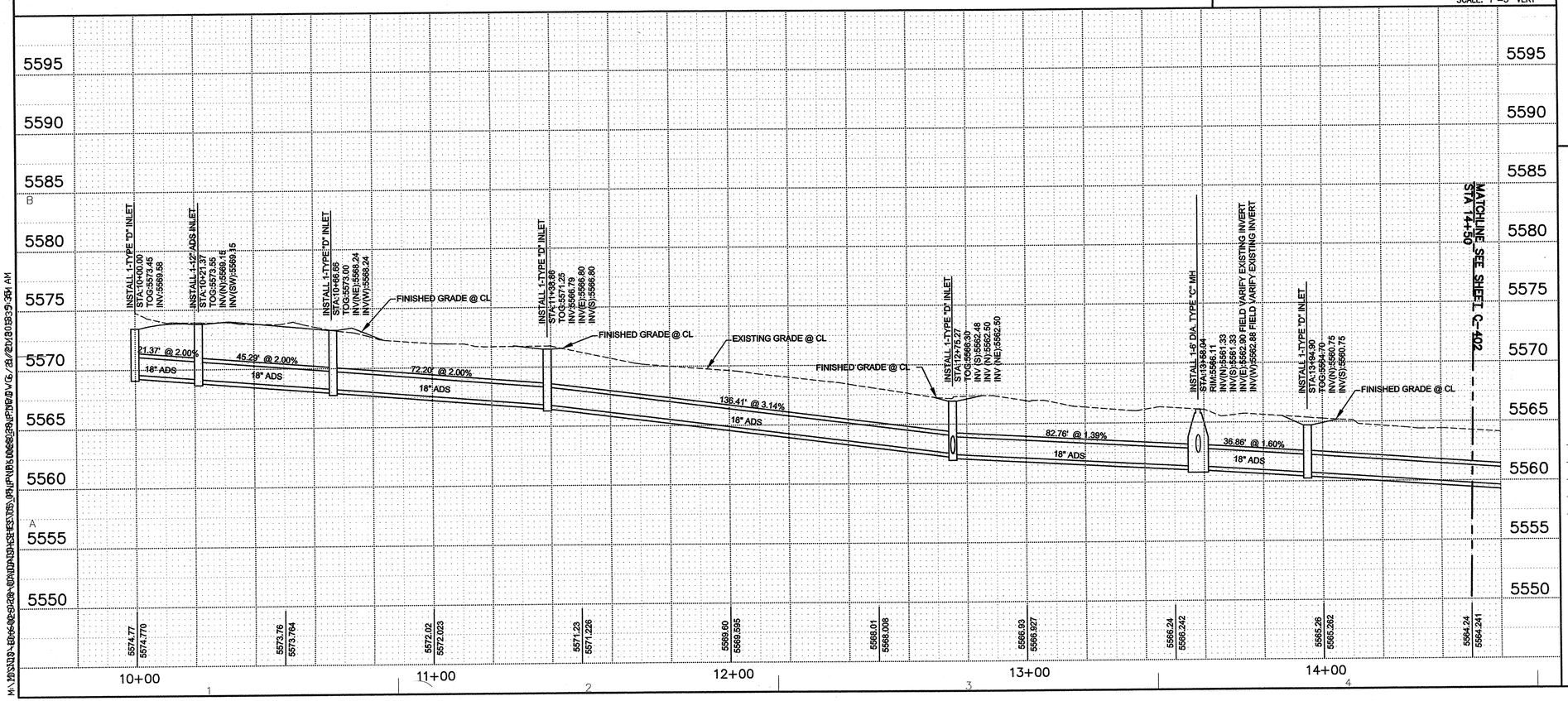


## SHEET KEY NOTES

1. CONTRACTOR TO GRADE AREA TO MATCH ADJACENT SLOPE. CONTACT AND COORDINATE WITH APS ON-CALL LANDSCAPE CONTRACTOR FOR SOIL AMENDMENT, SODDING AND IRRIGATION ADJUSTMENTS.
2. INSTALL 1-SGL TYPE "D" INLET. SEE DETAIL C1/C-504.
3. INSTALL 2" ASPHALT. SEE DETAIL B5/C-501.
4. INSTALL 8" TEMPORARY ASPHALT CURB. SEE DETAIL C1/C-505.
5. INSTALL CHANNEL PENETRATION. SEE SHEET C-503.
6. INSTALL 4" PCC SIDEWALK. SEE DETAIL A5/C-501.
7. INSTALL 18" DIA N-12 WT ADS STORM DRAIN PIPE.
8. INSTALL 12" DIA ADS INLET. SEE DETAIL A4/C-501
9. INSTALL 1-6' DIA TYPE "C" MANHOLE. SEE DETAIL C3/C-502. FIELD VARIFY EXISTING 12" RCP INVERTS
10. INSTALL 10'x10' ASPHALT PAD 3" THICK AROUND NEW INLET. SEE DETAIL C2/C-501.

## LEGEND

| | |
|---|---|
| PP | POWER POLE |
| | SANITARY MANHOLE |
| WV | WATER VALVE |
| | FIRE HYDRANT |
| | LIGHTPOLE |
| T | TELEPHONE MANHOLE |
| | TRAFFIC SIGN |
| V | VAULT |
| | ROOF DRAIN |
| TV | TV PEDESTAL |
| SCB | SPRINKLER CONTROL BOX |
| | DECIDUOUS TREE |
| CO | SANITARY CLEANOUT |
| 5348.67' | FINISH FLOOR ELEVATION |
| GAS | UNDERGROUND GASLINE |
| UGE | UNDERGROUND ELECTRIC |
| OHE | OVERHEAD ELECTRIC |
| FO | FIBER OPTIC LINE |
| UGTV | UNDERGROUND TV LINE |
| SS | SANITARY SEWER LINE |
| | CURB AND GUTTER |
| 5530 | INDEX CONTOUR |
| | INTERMEDIATE CONTOUR |

RECEIVED JUN 24 2013 LAND DEVELOPMENT SECTION


WILSON & COMPANY
4900 Lang Avenue NE
Albuquerque, NM 87109
Phone: (505) 348-4000


CONSULTANTS

SEAL: MARIO G. JUAREZ INFANTE, NEW MEXICO, 15340, 6-21-13, PROFESSIONAL ENGINEER

PROJECT NAME
MATHESON PARK ELEMENTARY
SITE IMPROVEMENTS
ALBUQUERQUE, NM

| MARK | DATE | DESCRIPTION |
|---|---|---|

PROJECT NO: 10-600-028-00

DRAWN BY: JLL

CHECKED BY: TJA

SHEET TITLE
STORM DRAIN PLAN AND PROFILE

SHEET
C-401

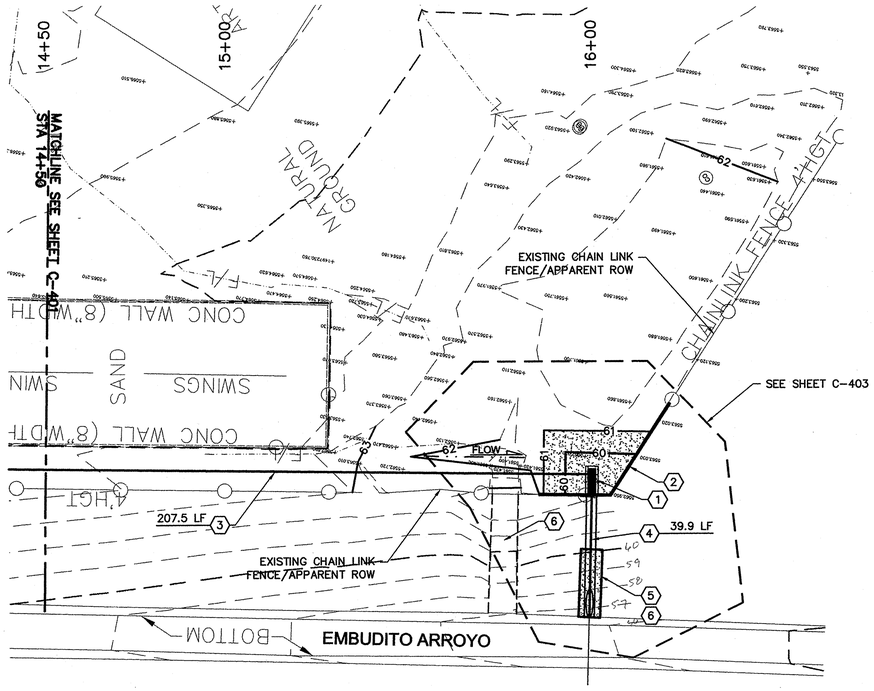


PLAN:
SCALE: 1"=20'

PROFILE:
SCALE: 1"=20' HORZ
SCALE: 1"=5' VERT

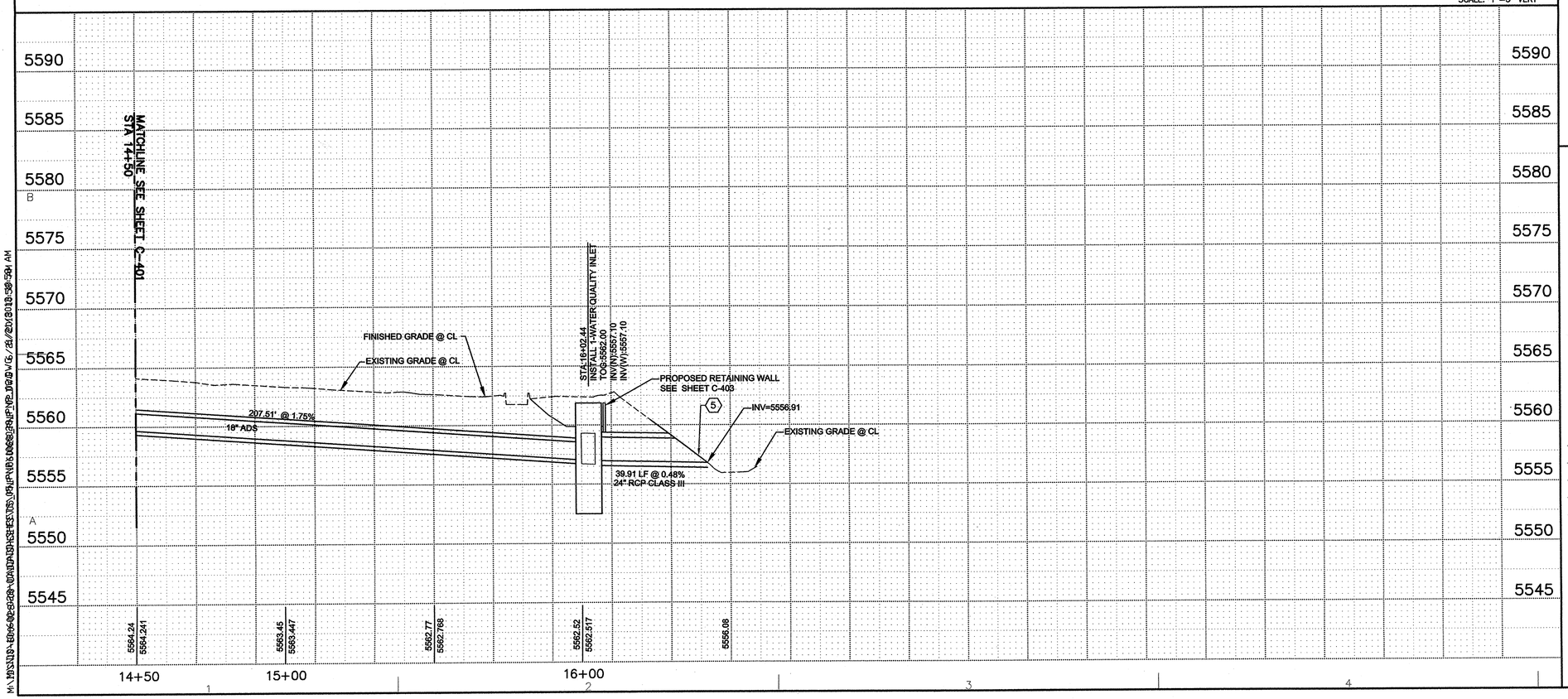


## SHEET KEY NOTES

1. INSTALL 1-MODIFIED WATER QUALITY STORM DBL TYPE "D" INLET. SEE DETAIL A1/C-502.
2. INSTALL 6" REINFORCED RETAINING WALL SEE DETAIL A2/C-501.
3. INSTALL 18" DIA ADS N-12 WT STORM DRAIN PIPE.
4. INSTALL 24" CLASS III RCP STORM DRAIN PIPE.
5. INSTALL CHANNEL PENETRATION PER DETAIL C-503.
6. CONTRACTOR TO GRADE AREA TO MATCH ADJACENT SLOPE. CONTACT AND COORDINATE WITH APS ON-CALL LANDSCAPE CONTRACTOR FOR SOIL AMENDMENT, SODDING AND IRRIGATION ADJUSTMENTS.

## LEGEND

| | |
|---|---|
| PP | POWER POLE |
| | SANITARY MANHOLE |
| | WATER VALVE |
| | FIRE HYDRANT |
| | LIGHTPOLE |
| | TELEPHONE MANHOLE |
| | TRAFFIC SIGN |
| | VAULT |
| | ROOF DRAIN |
| TV | TV PEDESTAL |
| SCB | SPRINKLER CONTROL BOX |
| | DECIDUOUS TREE |
| | SANITARY CLEANOUT |
| 5348.67' | FINISH FLOOR ELEVATION |
| GAS | UNDERGROUND GASLINE |
| UGE | UNDERGROUND ELECTRIC |
| OHE | OVERHEAD ELECTRIC |
| FO | FIBER OPTIC LINE |
| UGTV | UNDERGROUND TV LINE |
| SS | SANITARY SEWER LINE |
| | CURB AND GUTTER |
| 5530 | INDEX CONTOUR |
| | INTERMEDIATE CONTOUR |

RECEIVED
JUN 24 2013
LAND DEVELOPMENT SECTION

6/13


WILSON & COMPANY
4900 Lang Avenue NE
Albuquerque, NM 87109
Phone: (505) 348-4000


CONSULTANTS

SEAL
MARIO G. JUAREZ-INFANTE
NEW MEXICO
15340
12-21-12
PROFESSIONAL ENGINEER

PROJECT NAME
MATHESON PARK ELEMENTARY
SITE IMPROVEMENTS
ALBUQUERQUE, NM

| MARK | DATE | DESCRIPTION |
|---|---|---|

PROJECT NO: 10-600-028-00
DRAWN BY: JLL
CHECKED BY: TJA
SHEET TITLE
STORM DRAIN PLAN AND PROFILE

SHEET
C-402

50-19

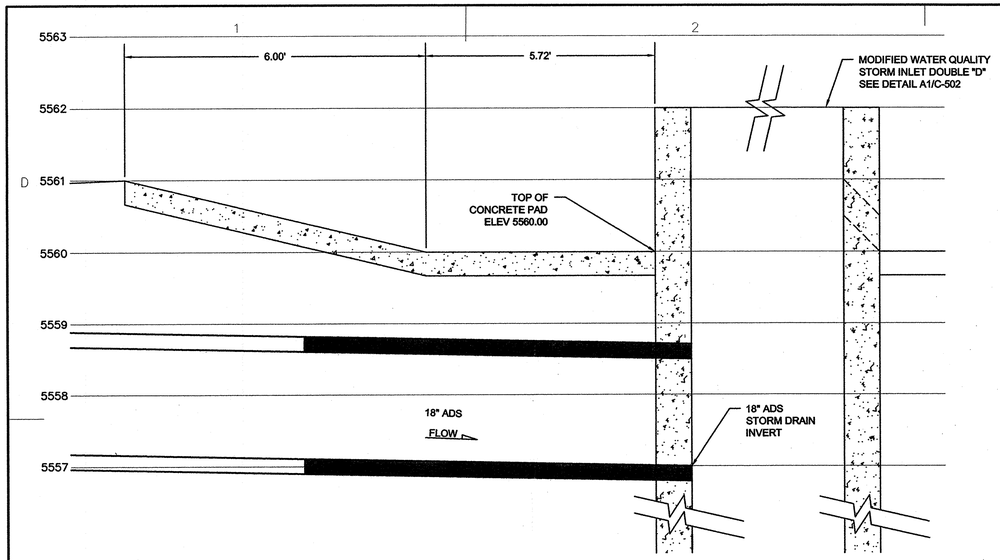


## C1 SECTION A-A 18" ADS STORM DRAIN DETAIL
1"=1'

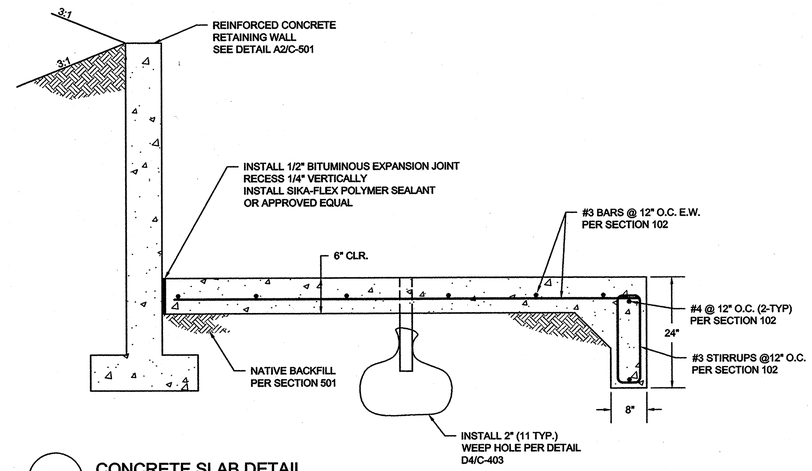


## C3 CONCRETE SLAB DETAIL
NO SCALE

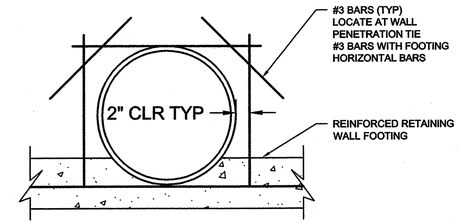


## C4 24" CLASS III RCP STORM DRAIN REBAR DETAIL
NTS

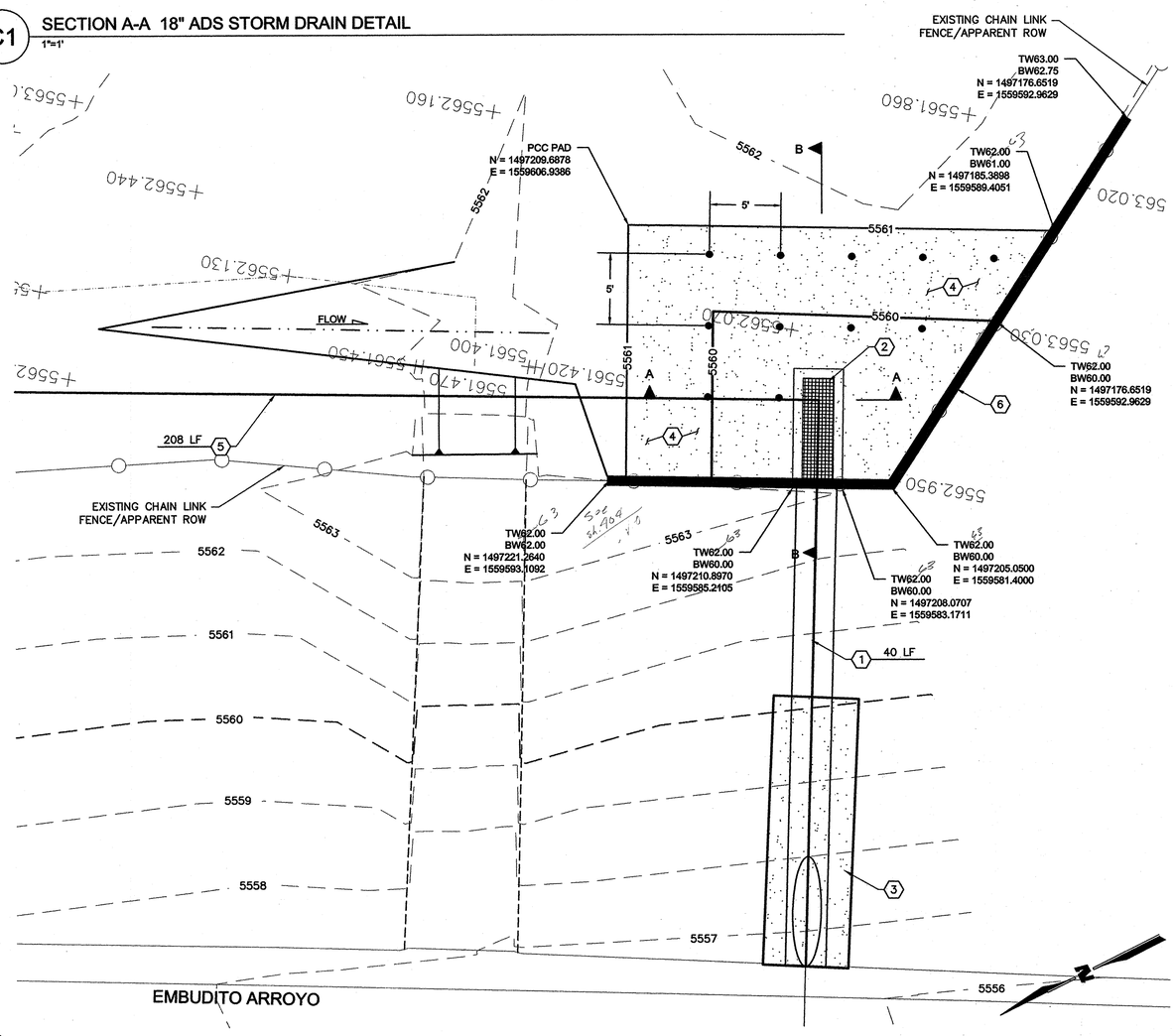


## A1 WATER QUALITY STRUCTURE PLAN
1"=5'

NOTES:
1 CUT WEEP PIPE FLUSH TO CONCRETE SLAP

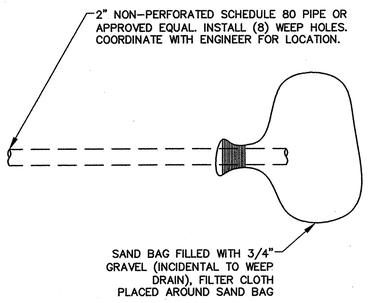


## D4 WEEP PIPE DETAIL
NO SCALE

## GENERAL NOTES

1. REMOVE AND RESET EXISTING CHAINLINK FENCE ON NEW REINFORCED CONCRETE RETAINING WALL. COORDINATE WITH ON CALL FENCING CONTRACTOR FOR SLEEVE LOCATIONS
2. RETAINING WALL AND WATER QUALITY INLET SHALL BE POURED MONOLITHICALLY.

## ⬡ SHEET KEY NOTES

1. INSTALL 24" DIA RCP CLASS III DRAIN PIPE.
2. INSTALL 1–WATER QUALITY DBL TYPE "D" INLET. SEE DETAIL A1/C–502.
   TOG ELEV=5562.00
   INV ELEV=5557.10
   SUMP ELEV=5553.10
3. INSTALL CHANNEL PENETRATION. SEE SHEET C–503.
4. INSTALL 4" PCC SIDEWALK. SEE DETAIL A5/C–501.
5. INSTALL 18" DIA ADS STORM DRAIN PIPE.
6. INSTALL 6" REINFORCED RETAINING WALL SEE DETAIL A2/C–501.

**Private Drainage Facilities within City Right-of-Way**
**Notice to Contractor**
(Special Order 19 ~ "SO-19")

1. An excavation permit will be required before beginning any work within City Right-Of-Way.
2. All work on this project shall be performed in accordance with applicable federal, state and local laws, rules and regulations concerning construction safety and health.
3. Two working days prior to any excavation, the contractor must contact **New Mexico One Call, dial "811"** [or (505) 260-1990] for the location of existing utilities.
4. Prior to construction, the contractor shall excavate and verify the locations of all obstructions. Should a conflict exist, the contractor shall notify the engineer so that the conflict can be resolved with a minimum amount of delay.
5. Backfill compaction shall be according to traffic/street use.
6. Maintenance of the facility shall be the responsibility of the owner of the property being served.
7. Work on arterial streets shall be performed on a 24-hour basis.

City Inspector – Jason Rodriguez

## SPECIAL ORDER 19 (SO–19)

## LEGEND

| | |
|---|---|
| PP | POWER POLE |
| | SANITARY MANHOLE |
| | WATER VALVE |
| | FIRE HYDRANT |
| | LIGHTPOLE |
| | TELEPHONE MANHOLE |
| | TRAFFIC SIGN |
| | VAULT |
| RD | ROOF DRAIN |
| TV | TV PEDESTAL |
| SCB | SPRINKLER CONTROL BOX |
| | DECIDUOUS TREE |
| CO | SANITARY CLEANOUT |
| 5348.67' | FINISH FLOOR ELEVATION |
| GAS | UNDERGROUND GASLINE |
| UGE | UNDERGROUND ELECTRIC |
| OHE | OVERHEAD ELECTRIC |
| FO | FIBER OPTIC LINE |
| UGTV | UNDERGROUND TV LINE |
| SS | SANITARY SEWER LINE |
| | CURB AND GUTTER |
| 5530 | INDEX CONTOUR |
| | INTERMEDIATE CONTOUR |
| | PROPOSED WEEP HOLE |
| | SLOPE DIRECTION |

RECEIVED JUN 24 2013 LAND DEVELOPMENT SECTION

7/13


WILSON & COMPANY
4900 Lang Avenue NE
Albuquerque, NM 87109
Phone: (505) 348–4000


CONSULTANTS

SEAL

MARIO G. JUAREZ NEVATE NEW MEXICO 15340 6-21-13 PROFESSIONAL ENGINEER

PROJECT NAME
MATHESON PARK ELEMENTARY
SITE IMPROVEMENTS
ALBUQUERQUE, NM

| MARK | DATE | DESCRIPTION |
|---|---|---|

PROJECT NO: 10–600–028–00
DRAWN BY: JLL
CHECKED BY: TJA
SHEET TITLE
WATER QUALITY STRUCTURE

SHEET
C–403

SO-19

M:\IDS\10-600-028-00\CADD\SHEETS\03_G&D\1060028_GD02.DWG 6/21/2013 11:55 AM

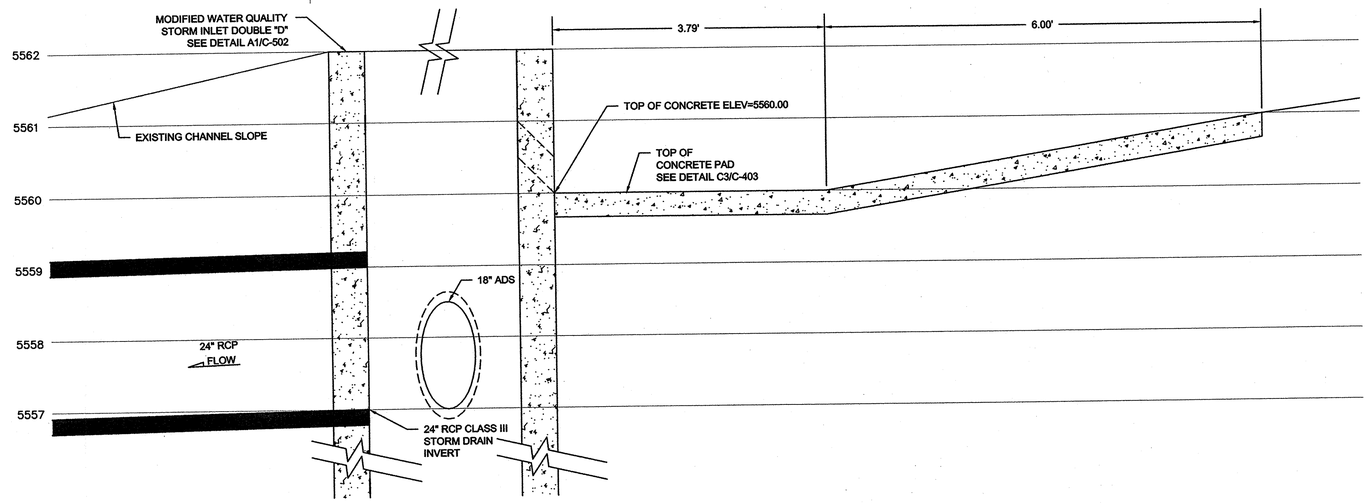


C1 SECTION B-B - 24" RCP CLASS III STORM DRAIN DETAIL
1"=1'

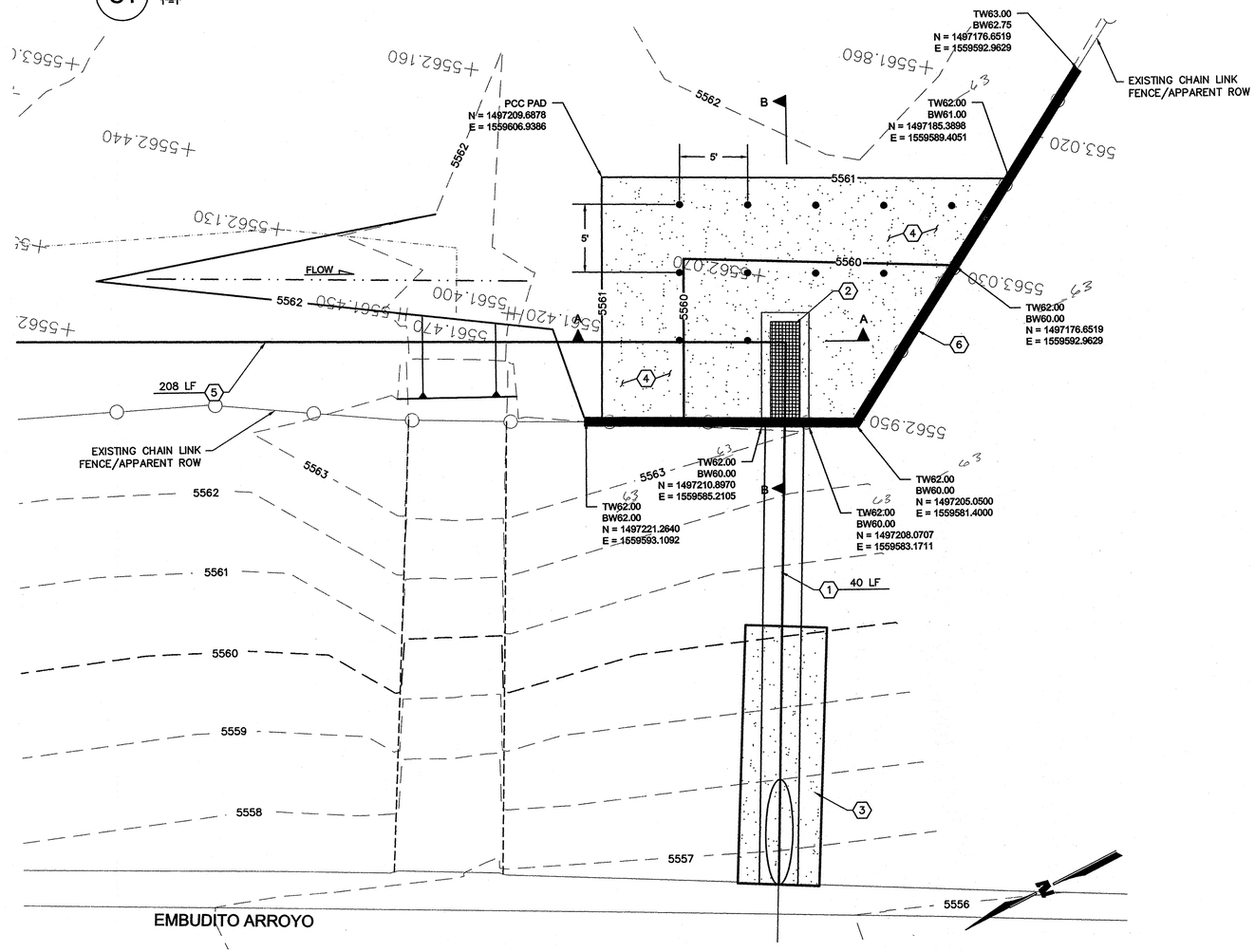


A1 WATER QUALITY STRUCTURE PLAN
1"=5'

TW change per Nicole Truj. Tlo, Wilson 348-4112 on 7/10/13 OK

## GENERAL NOTES

1. REMOVE AND RESET EXISTING CHAINLINK FENCE ON NEW REINFORCED CONCRETE RETAINING WALL. COORDINATE WITH ON CALL FENCING CONTRACTOR FOR SLEEVE LOCATIONS
2. RETAINING WALL AND WATER QUALITY INLET SHALL BE POURED MONOLITHICALLY.

## SHEET KEY NOTES

1. INSTALL 24" DIA RCP CLASS III DRAIN PIPE.
2. INSTALL 1–WATER QUALITY DBL TYPE "D" INLET. SEE DETAIL A1/C–502.
   TOG ELEV=5562.00
   INV ELEV=5557.10
   SUMP ELEV=5553.10
3. INSTALL CHANNEL PENETRATION. SEE SHEET C–503.
4. INSTALL 4" PCC SIDEWALK. SEE DETAIL A5/C–501.
5. INSTALL 18" DIA ADS STORM DRAIN PIPE.
6. INSTALL 6" REINFORCED RETAINING WALL SEE DETAIL A2/C–501.

**Private Drainage Facilities within City Right-of-Way**
**Notice to Contractor**
(Special Order 19 ~ "SO-19")

1. An excavation permit will be required before beginning any work within City Right-Of-Way.
2. All work on this project shall be performed in accordance with applicable federal, state and local laws, rules and regulations concerning construction safety and health.
3. Two working days prior to any excavation, the contractor must contact **New Mexico One Call, dial "811"** [or (505) 260-1990] for the location of existing utilities.
4. Prior to construction, the contractor shall excavate and verify the locations of all obstructions. Should a conflict exist, the contractor shall notify the engineer so that the conflict can be resolved with a minimum amount of delay.
5. Backfill compaction shall be according to traffic/street use.
6. Maintenance of the facility shall be the responsibility of the owner of the property being served.
7. Work on arterial streets shall be performed on a 24-hour basis.

City Inspector – Jason Rodriguez

## SPECIAL ORDER 19 (SO–19)

## LEGEND

| | |
|---|---|
| PP | POWER POLE |
| | SANITARY MANHOLE |
| | WATER VALVE |
| | FIRE HYDRANT |
| | LIGHTPOLE |
| | TELEPHONE MANHOLE |
| | TRAFFIC SIGN |
| V | VAULT |
| | ROOF DRAIN |
| TV | TV PEDESTAL |
| SCB | SPRINKLER CONTROL BOX |
| | DECIDUOUS TREE |
| CO | SANITARY CLEANOUT |
| 5348.67' | FINISH FLOOR ELEVATION |
| GAS | UNDERGROUND GASLINE |
| UGE | UNDERGROUND ELECTRIC |
| OHE | OVERHEAD ELECTRIC |
| FO | FIBER OPTIC LINE |
| UGTV | UNDERGROUND TV LINE |
| SS | SANITARY SEWER LINE |
| | CURB AND GUTTER |
| 5530 | INDEX CONTOUR |
| | INTERMEDIATE CONTOUR |
| | PROPOSED WEEP HOLE |
| | SLOPE DIRECTION |

RECEIVED JUN 24 2013 LAND DEVELOPMENT SECTION

8/13

WILSON & COMPANY
4900 Lang Avenue NE
Albuquerque, NM 87109
Phone: (505) 348–4000

CONSULTANTS

SEAL
MARIO G. JUAREZ NEW MEXICO 15340 PROFESSIONAL ENGINEER 6-21-13

PROJECT NAME
MATHESON PARK ELEMENTARY
SITE IMPROVEMENTS
ALBUQUERQUE, NM

| MARK | DATE | DESCRIPTION |
|---|---|---|

PROJECT NO: 10–600–028–00
DRAWN BY: JLL
CHECKED BY: TJA
SHEET TITLE
WATER QUALITY STRUCTURE

SHEET
C–404

SO-19

M:\IDS\10-600-028-00\CADD\SHEETS\03_G&D\1060028_GD02.DWG 6/21/2013 11:55 AM

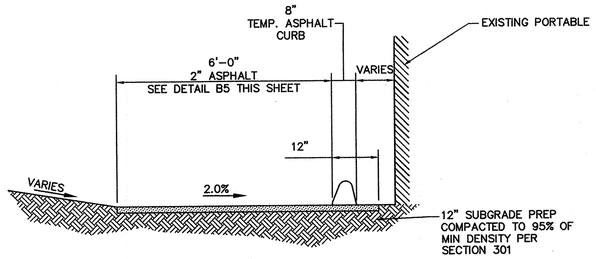


D1 SECTION–A
SCALE: NTS

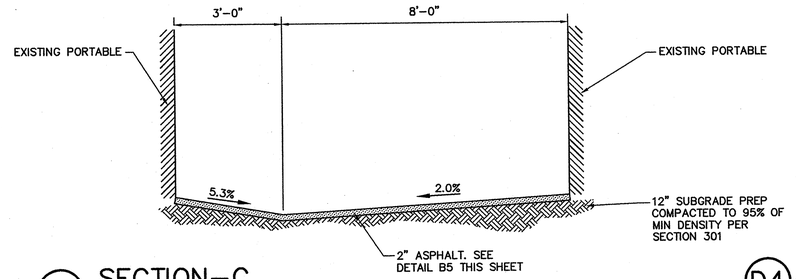


D3 SECTION–C
SCALE: NTS

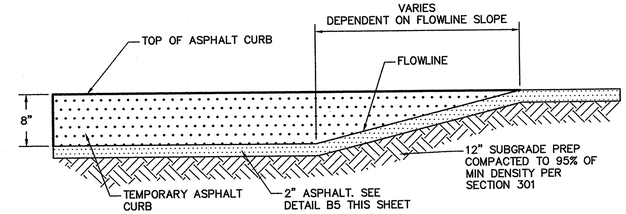


D4 TRANSITION TO 8" TEMP. ASPHALT CURB
SCALE: NTS

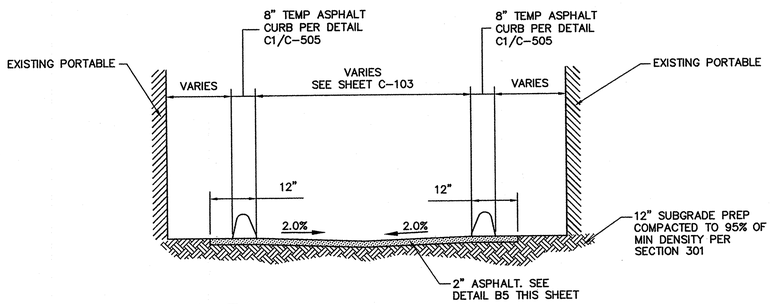


C1 SECTION–B
SCALE: NTS

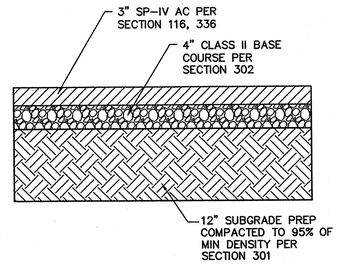


C2 3" ASPHALT SECTION
SCALE: NTS

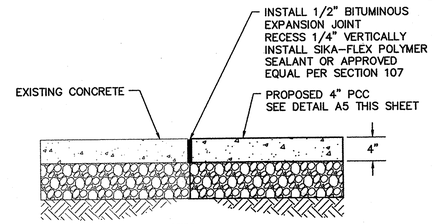


CONSTRUCTION NOTES
1 WHEN ABUTTING TO VERTICAL WALLS, BENCHES OR BUILDINGS, INSTALL 1/2" BITUMINOUS EXPANSION JOINT. RECESS 1/4" VERTICALLY. INSTALL SIKA-FLEX POLYMER SEALANT OR APPROVED EQUAL PER SECTION 107 (TYP).
2 INSTALL CONTRACTION JOINTS @ 6'-0" OC
3 LIGHT BROOM FINISHED CONCRETE SURFACE REQUIRED.

C3 OLD/NEW CONCRETE JOINT DETAIL
SCALE: NTS

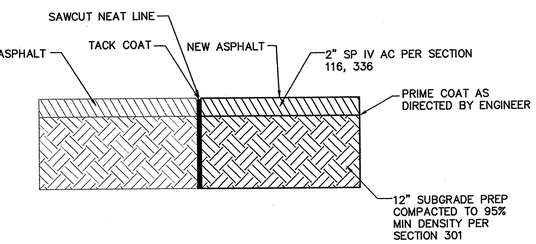


C4 OLD/NEW ASPHALT JOINT DETAIL
SCALE: NTS

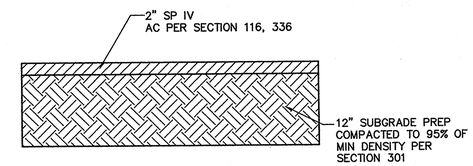


B5 2" ASPHALT SECTION
SCALE: NTS

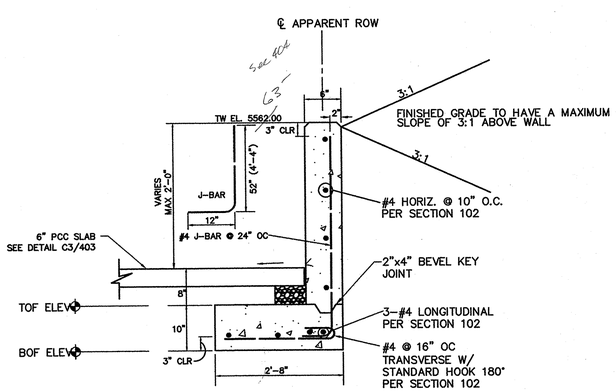


A2 REINFORCED RETAINING WALL
SCALE: NTS

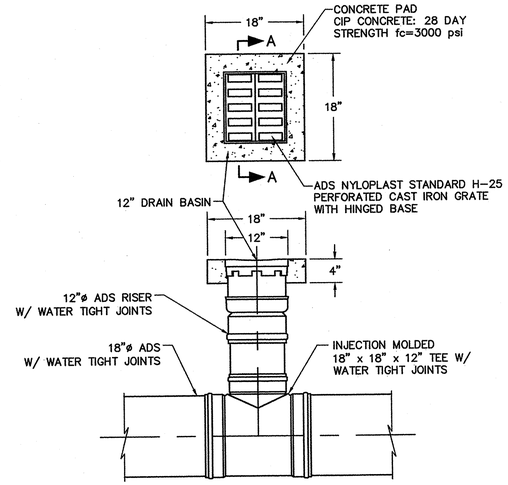


SECTION A–A

A4 12" ADS INLET
SCALE: NTS

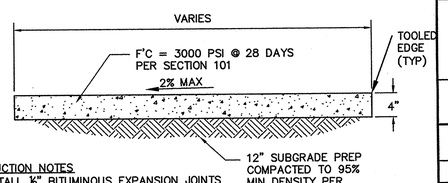


CONSTRUCTION NOTES
1. INSTALL ½" BITUMINOUS EXPANSION JOINTS WHERE SIDEWALK ABUTS BUILDINGS, FENCES AND NO MORE THAN 32' LONGITUDINALLY EXPANSION JOINTS RECESS ¼" VERTICALLY, INSTALL SIKA-FLEX POLYMER JOINT SEALANT OR APPROVED EQUAL.
2. INSTALL CONTRACTION JOINTS AT 6'-0" O.C.
3. LIGHT BROOM FINISHED CONCRETE SURFACE REQUIRED, SEE DETAIL D4 THIS SHEET.
4. AS MUCH AS POSSIBLE SIDEWALK JOINTS SHALL MATCH CURB & GUTTER JOINT SPACING.

A5 4" PCC SIDEWALK
SCALE: NTS

RECEIVED
JUN 24 2013
LAND DEVELOPMENT SECTION

9/13

WILSON & COMPANY
4900 Lang Avenue NE
Albuquerque, NM 87109
Phone: (505) 348-4000

CONSULTANTS

SEAL
MARIO G. JUAREZ INFANTE
NEW MEXICO
15340
6-21-13
PROFESSIONAL ENGINEER

PROJECT NAME
MATHESON PARK ELEMENTARY
SITE IMPROVEMENTS
ALBUQUERQUE, NM

| MARK | DATE | DESCRIPTION |
|---|---|---|

PROJECT NO: 10-600-028-00
DRAWN BY: JLL
CHECKED BY: TJA
SHEET TITLE
SITE DETAILS
SHEET
C-501

M:\IDS\10-600-028-00\CADD\SHEETS\06_DETAILS\1060028_DTL01DWG.DWG 6/21/2013 9:08 AM

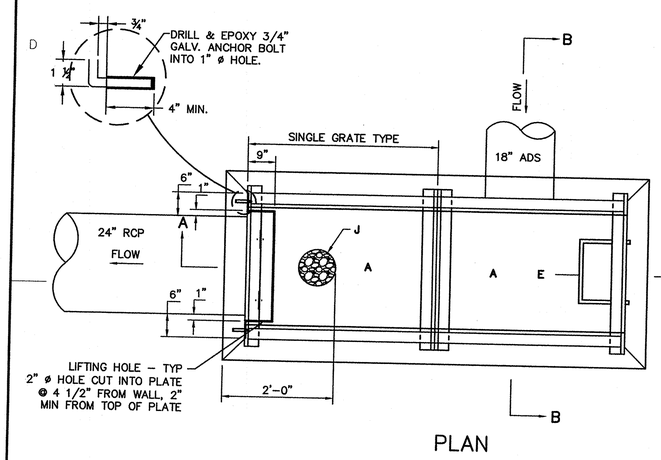


PLAN

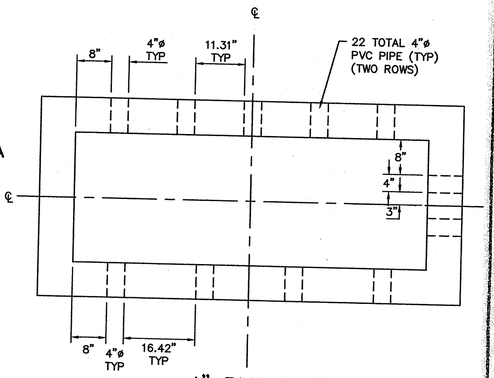


4" PVC PIPE SPACING LAYOUT PLAN

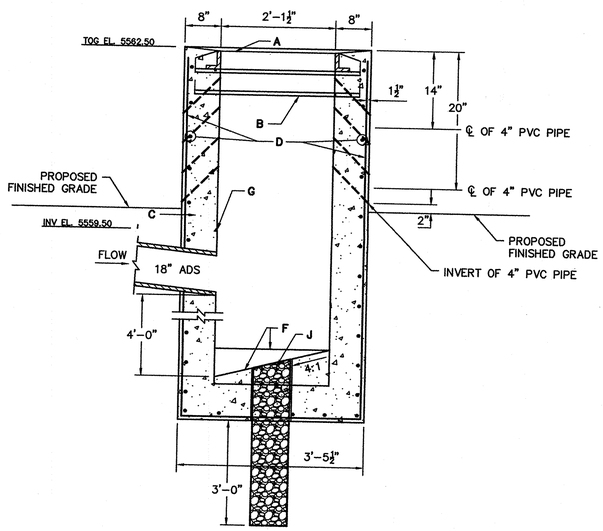


SECTION B–B

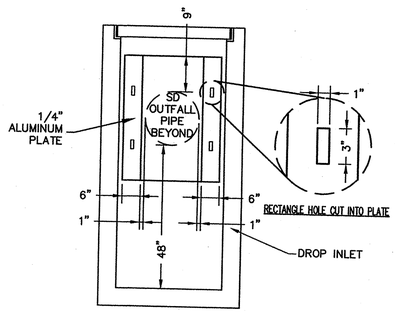


ELEVATION VIEW
NTS

## GENERAL NOTES:

1. FOR SINGLE GRATE TYPE STORM INLET, DELETE CENTER SUPPORT AND MOVE ONE END WALL TO FORM NEW SINGLE GRATE INLET.
2. STORM INLET GUTTER TRANSITION WILL BE SHOWN ON THE CONSTRUCTION PLANS.
3. OUTLET PIPE SIZE, PER DESIGN REQUIREMENT.
4. FOR FRAME & GRATING, SEE DWG 2216, 2220 & 2221.
5. FOR CENTER SUPPORT ASSEMBLY, SEE DWG 2215.

## CONSTRUCTION NOTES:

A. FRAME & GRATE.
B. CENTER SUPPORT ASSEMBLY.
C. CUT ONE HORIZONTAL & ONE VERTICAL BAR MAX AT PIPE OPENING.
D. NO 4 BARS AT 6" OC EW
E. USE STANDARD STEPS, SEE DWG 2229.
F. CONC FILL, SEE NOTE C, DWG 2201.
G. INVERT PER DESIGN.
H. INSTALL STEPS ON DOWNSTREAM FACE.
I. INSTALL 22–4" DIA. SCHEDULE 40 PVC PIPE PENETRATIONS INVERTED 45° AND MITERED FLUSH WITH CONCRETE
J. 8" SLOTTED PVC PIPE FILLED WITH 3/4" GRAVEL.

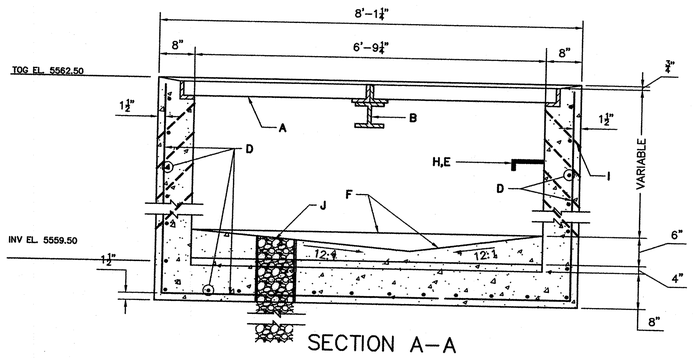


SECTION A–A

A1 MODIFIED WATER QUALITY STORM INLET DOUBLE "D"
NTS

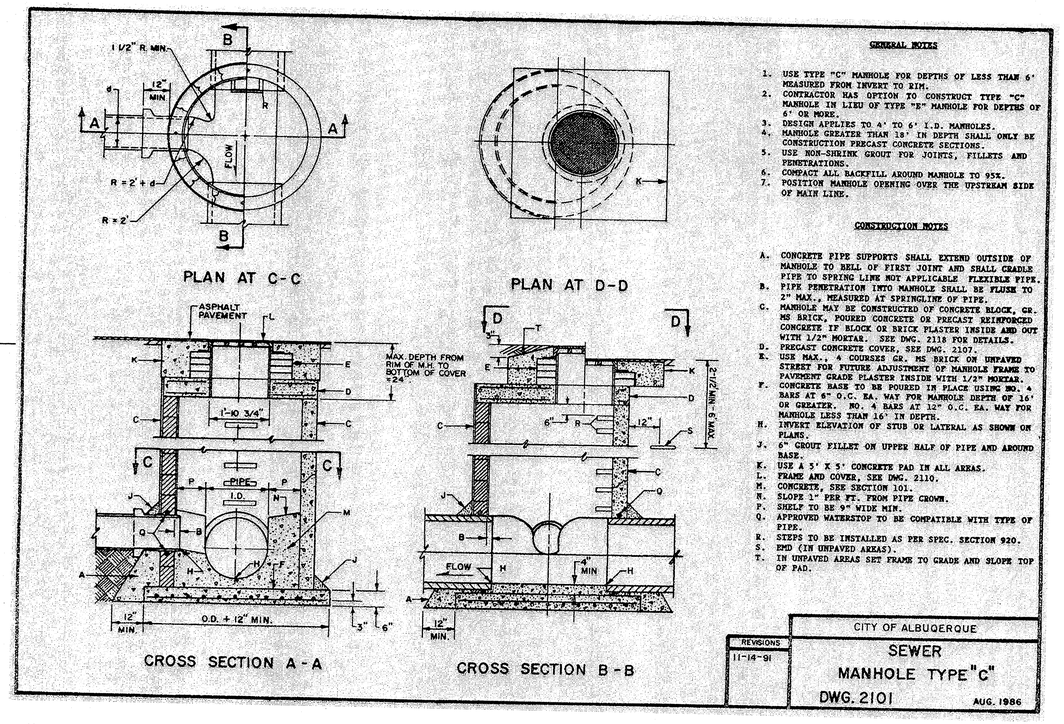


GENERAL NOTES

1. USE TYPE "C" MANHOLE FOR DEPTHS OF LESS THAN 6' MEASURED FROM INVERT TO RIM.
2. CONTRACTOR HAS OPTION TO CONSTRUCT TYPE "C" MANHOLE IN LIEU OF TYPE "E" MANHOLE FOR DEPTHS OF 6' OR MORE.
3. DESIGN APPLIES TO 4' TO 6' I.D. MANHOLES.
4. MANHOLE GREATER THAN 18' IN DEPTH SHALL ONLY BE CONSTRUCTION PRECAST CONCRETE SECTIONS.
5. USE NON-SHRINK GROUT FOR JOINTS, FILLETS AND PENETRATIONS.
6. COMPACT ALL BACKFILL AROUND MANHOLE TO 95%.
7. POSITION MANHOLE OPENING OVER THE UPSTREAM SIDE OF MAIN LINE.

CONSTRUCTION NOTES

A. CONCRETE PIPE SUPPORTS SHALL EXTEND OUTSIDE OF MANHOLE TO BELL OF FIRST JOINT AND SHALL CRADLE PIPE TO SPRING LINE NOT APPLICABLE FLEXIBLE PIPE.
B. PIPE PENETRATION INTO MANHOLE SHALL BE FLUSH TO 2" MAX., MEASURED AT SPRINGLINE OF PIPE.
C. MANHOLE MAY BE CONSTRUCTED OF CONCRETE BLOCK, GR. MS BRICK, POURED CONCRETE OR PRECAST REINFORCED CONCRETE IF BLOCK OR BRICK PLASTER INSIDE AND OUT WITH 1/2" MORTAR. SEE DWG. 2118 FOR DETAILS.
D. PRECAST CONCRETE COVER, SEE DWG. 2107.
E. USE MAX., 4 COURSES GR. MS BRICK ON UNPAVED STREET FOR FUTURE ADJUSTMENT OF MANHOLE FRAME TO PAVEMENT GRADE PLASTER INSIDE WITH 1/2" MORTAR.
F. CONCRETE BASE TO BE POURED IN PLACE USING NO. 4 BARS AT 6" O.C. EA. WAY FOR MANHOLE DEPTH OF 16' OR GREATER. NO. 4 BARS AT 12" O.C. EA. WAY FOR MANHOLE LESS THAN 16' IN DEPTH.
H. INVERT ELEVATION OF STUB OR LATERAL AS SHOWN ON PLANS.
J. 6" GROUT FILLET ON UPPER HALF OF PIPE AND AROUND BASE.
K. USE A 5' X 5' CONCRETE PAD IN ALL AREAS.
L. FRAME AND COVER, SEE DWG. 2110.
M. CONCRETE, SEE SECTION 101.
N. SLOPE 1" PER FT. FROM PIPE CROWN.
P. SHELF TO BE 9" WIDE MIN.
Q. APPROVED WATERSTOP TO BE COMPATIBLE WITH TYPE OF PIPE.
R. STEPS TO BE INSTALLED AS PER SPEC. SECTION 920.
S. END (IN UNPAVED AREAS).
T. IN UNPAVED AREAS SET FRAME TO GRADE AND SLOPE TOP OF PAD.

REVISIONS: 11-14-91

CITY OF ALBUQUERQUE
SEWER
MANHOLE TYPE "C"
DWG. 2101 AUG. 1986

C3 MANHOLE TYPE "C" (COA STD DWG 2101)
NTS

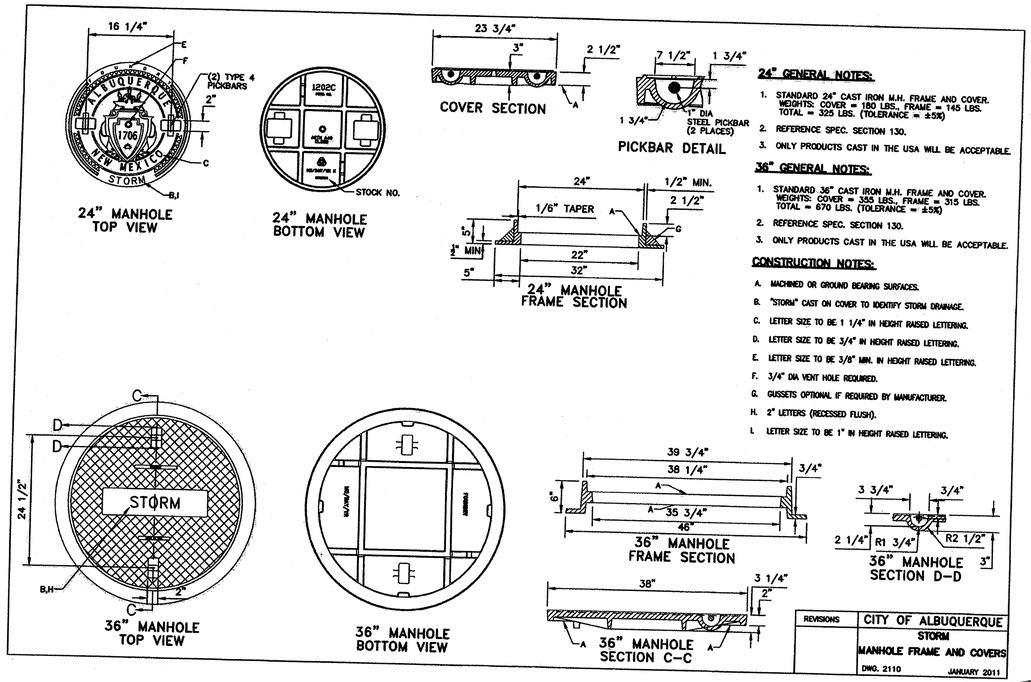


24" GENERAL NOTES:

1. STANDARD 24" CAST IRON M.H. FRAME AND COVER. WEIGHTS: COVER = 180 LBS., FRAME = 145 LBS. TOTAL = 325 LBS. (TOLERANCE = ±5%)
2. REFERENCE SPEC. SECTION 130.
3. ONLY PRODUCTS CAST IN THE USA WILL BE ACCEPTABLE.

36" GENERAL NOTES:

1. STANDARD 36" CAST IRON M.H. FRAME AND COVER. WEIGHTS: COVER = 355 LBS., FRAME = 315 LBS. TOTAL = 670 LBS. (TOLERANCE = ±5%)
2. REFERENCE SPEC. SECTION 130.
3. ONLY PRODUCTS CAST IN THE USA WILL BE ACCEPTABLE.

CONSTRUCTION NOTES:

A. MACHINED OR GROUND BEARING SURFACES.
B. "STORM" CAST ON COVER TO IDENTIFY STORM DRAINAGE.
C. LETTER SIZE TO BE 1 1/4" IN HEIGHT RAISED LETTERING.
D. LETTER SIZE TO BE 3/4" IN HEIGHT RAISED LETTERING.
E. LETTER SIZE TO BE 3/8" MIN. IN HEIGHT RAISED LETTERING.
F. 3/4" DIA VENT HOLE REQUIRED.
G. GUSSETS OPTIONAL IF REQUIRED BY MANUFACTURER.
H. 2" LETTERS (RECESSED FLUSH).
I. LETTER SIZE TO BE 1" IN HEIGHT RAISED LETTERING.

REVISIONS

CITY OF ALBUQUERQUE
STORM
MANHOLE FRAME AND COVERS
DWG. 2110 JANUARY 2011

A3 MANHOLE FRAME AND COVERS (COA STD DWG 2110)
NTS

10/13

RECEIVED JUN 24 2013 LAND DEVELOPMENT SECTION

WILSON & COMPANY
4900 Lang Avenue NE
Albuquerque, NM 87109
Phone: (505) 348-4000

CONSULTANTS

SEAL: MARIO G. JUAREZ-INFANTE, NEW MEXICO, 15340, 6-21-13, PROFESSIONAL ENGINEER

PROJECT NAME
MATHESON PARK ELEMENTARY
SITE IMPROVEMENTS
ALBUQUERQUE, NM

| MARK | DATE | DESCRIPTION |
|---|---|---|

PROJECT NO: 10-600-028-00
DRAWN BY: JLL
CHECKED BY: TJA
SHEET TITLE
SITE DETAILS

SHEET C-502

M:\IDS\10-600-028-00\CADD\SHEETS\06_DETAILS\1060028_DTL02.DWG 6/21/2013 11:58 AM

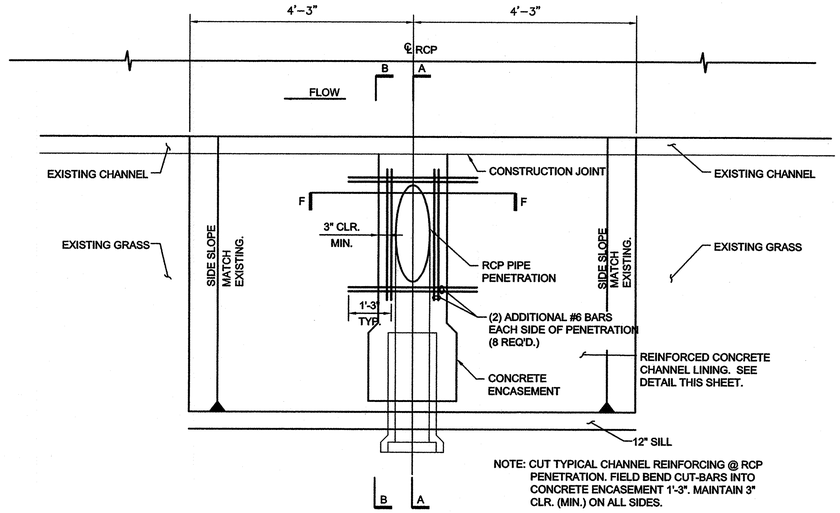


NOTE: CUT TYPICAL CHANNEL REINFORCING @ RCP PENETRATION. FIELD BEND CUT-BARS INTO CONCRETE ENCASEMENT 1'-3". MAINTAIN 3" CLR. (MIN.) ON ALL SIDES.

## PIPE PENETRATION (PLAN VIEW)

NO SCALE

| DIMENSION "B" | | | | | | | |
|---|---|---|---|---|---|---|---|
| PIPE DIAMETER (INCHES) | | | | | | | |
| 24 | 30 | 36 | 42 | 48 | 54 | 60 | 72 |
| 10" | 11" | 1'-1" | 1'-2" | 1'-3" | 1'-4" | 1'-6" | 1'-8" |

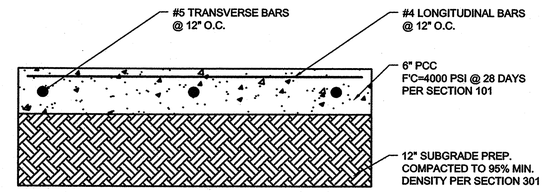


## CHANNEL LINING

NO SCALE

## GENERAL NOTES:

1. THE PIPE PENETRATION DETAILED HEREIN SHALL BE PAID FOR LUMP SUM AND SHALL BE COMPENSATION FOR THE PENETRATION COMPLETE AND IN PLACE. INCLUDED IN THIS WORK (BUT NOT LIMITED TO) IS GRADING, SUBGRADE PREPARATION, REINFORCED CONCRETE, CONSTRUCTION JOINTS, CONCRETE PLACEMENT AND FINISHING. NOTE THE MEASUREMENT FOR 8" CHANNEL LINING IS CONTINUOUS AND UNINTERRUPTED AT THE PENETRATION LOCATION.
2. ALL CULVERT PIPE PLACED UNDER THE CHANNEL LINING OR WITHIN AMAFCA RIGHT-OF-WAY SHALL BE RCP CLASS III MIN.
3. FOR PIPE PENETRATIONS INTO EXISTING CHANNELS, USE CHANNEL REMOVAL DETAILS FROM AMAFCA STANDARD DRAWING 102.

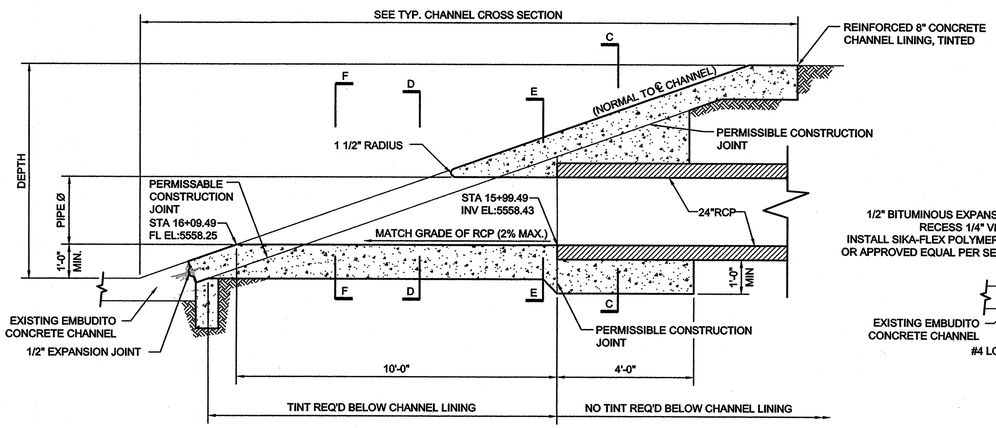


## SECTION A-A

NO SCALE

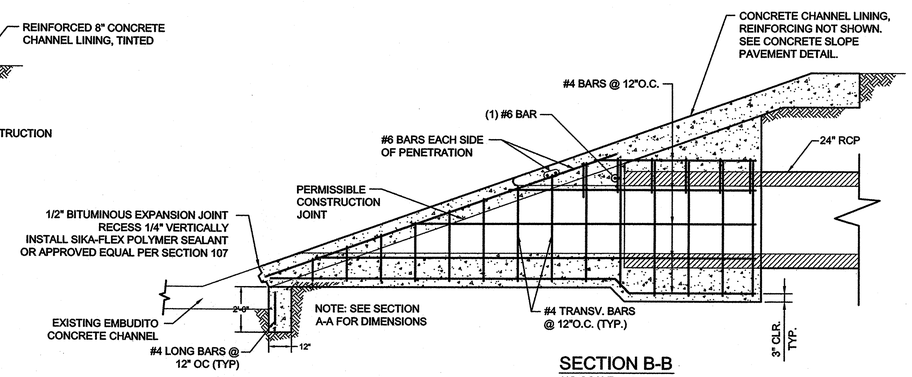


## SECTION B-B

NO SCALE

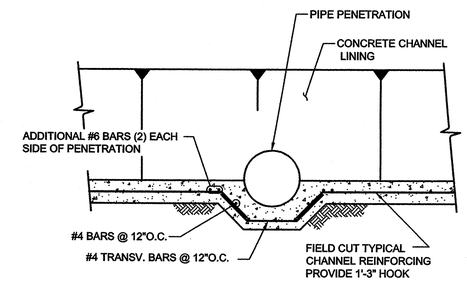


## SECTION F-F

NO SCALE

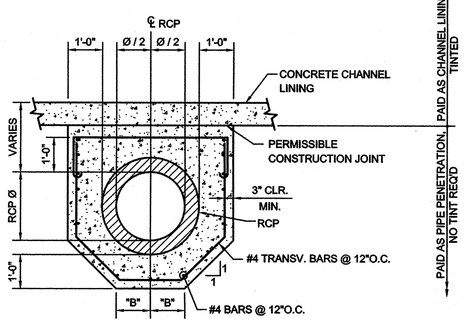


## SECTION C-C

NO SCALE

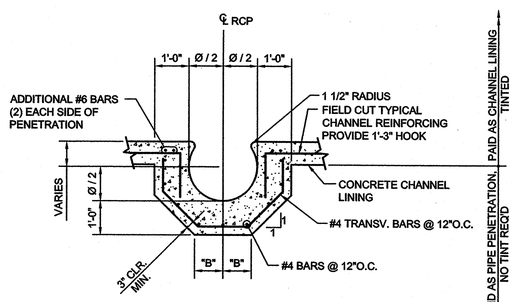


## SECTION D-D

NO SCALE

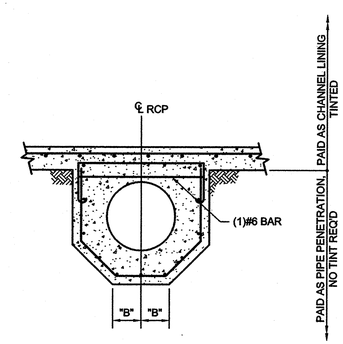


## SECTION E-E

NO SCALE

RECEIVED JUN 24 2013 LAND DEVELOPMENT SECTION

11/13

50-19

WILSON & COMPANY
4900 Lang Avenue NE
Albuquerque, NM 87109
Phone: (505) 348-4000

CONSULTANTS

SEAL

MARIO G. JUAREZ-NEVATE NEW MEXICO 15340 10-21-13 PROFESSIONAL ENGINEER

PROJECT NAME
MATHESON PARK ELEMENTARY SITE IMPROVEMENTS ALBUQUERQUE, NM

| MARK | DATE | DESCRIPTION |
|---|---|---|

PROJECT NO: 10-600-028-00
DRAWN BY: JLL
CHECKED BY: TJA
SHEET TITLE
CHANNEL PENETRATION DETAILS
SHEET
C-503

M:\DS\10-600-028-00\CADD\SHEETS\06_DETAILS\1060028_DTL03.DWG 6/21/2013 9:14 AM

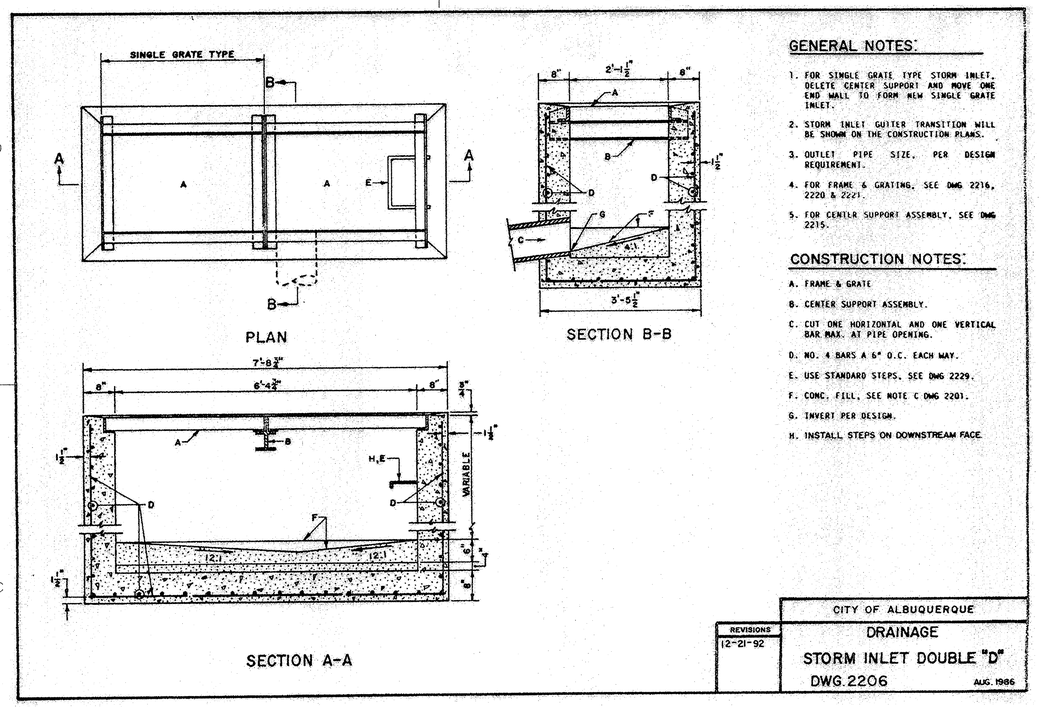


C1 STORM INLET DOUBLE "D" (COA STD DWG 2206)
NTS

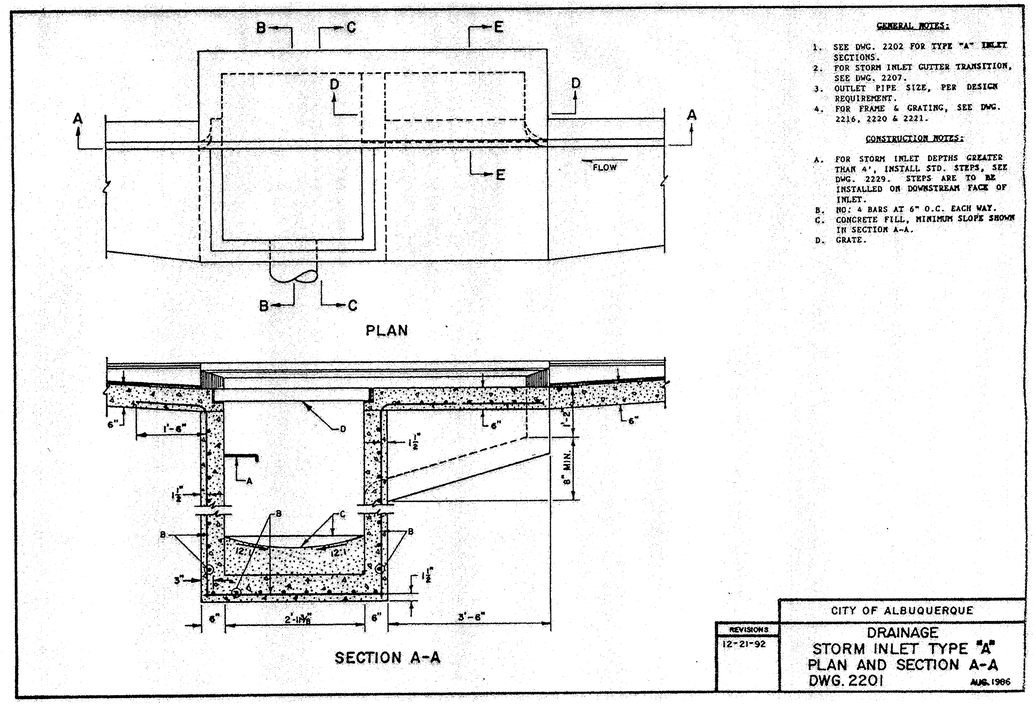


C3 STORM INLET TYPE "A" (COA STD DWG 2201)
NTS

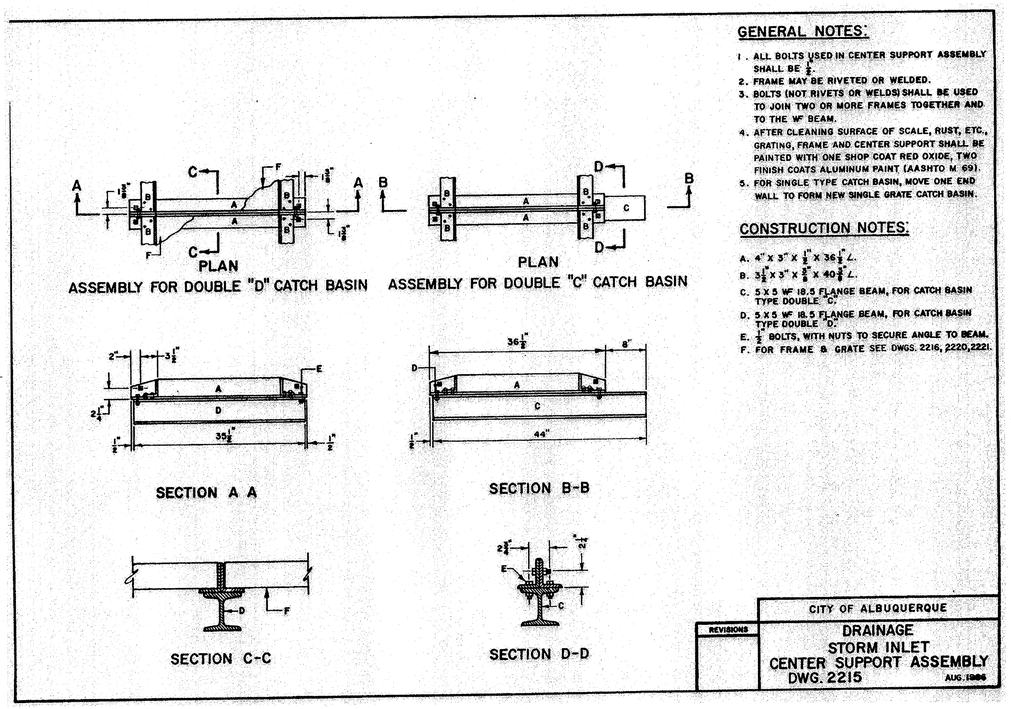


A1 STORM INLET CENTER SUPPORT ASSEMBLY (COA STD DWG 2215)
NTS

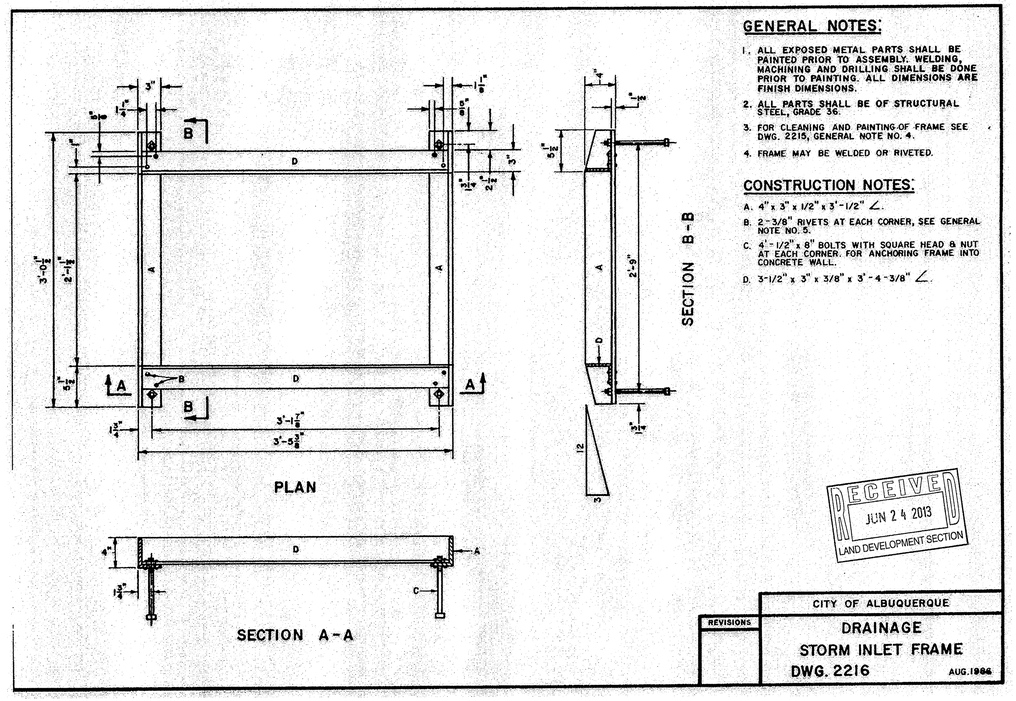


A3 STORM INLET FRAME (COA STD DWG 2216)
NTS

12/13

WILSON & COMPANY
4900 Lang Avenue NE
Albuquerque, NM 87109
Phone: (505) 348-4000

CONSULTANTS

SEAL
MARIO G. JUAREZ SANTE
NEW MEXICO
15340
10-21-13
PROFESSIONAL ENGINEER

PROJECT NAME
MATHESON PARK ELEMENTARY
SITE IMPROVEMENTS
ALBUQUERQUE, NM

| MARK | DATE | DESCRIPTION |
|---|---|---|

PROJECT NO: 10-600-028-00
DRAWN BY: JLL
CHECKED BY: TJA
SHEET TITLE
STORM INLET DETAILS
SHEET
C-504

M:\IDS\10-600-028-00\CADD\SHEETS\06_DETAILS\1060028_DTL04.DWG 6/11/2013 2:26 PM

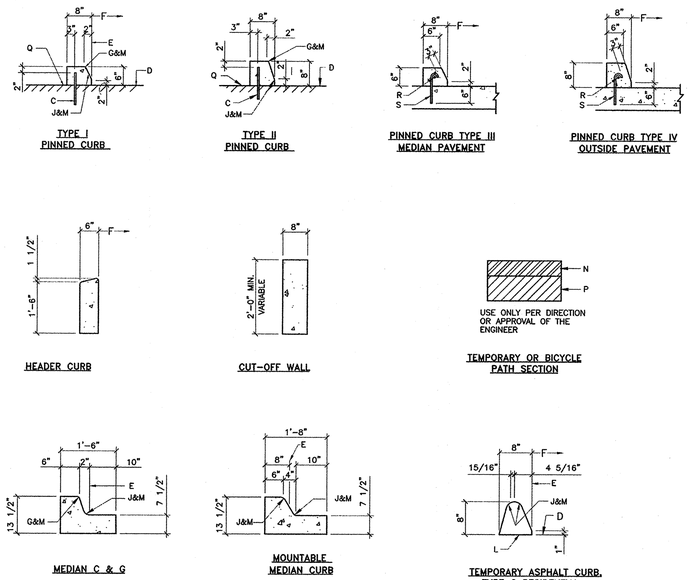


## CONSTRUCTION NOTES

A. REQ. CONC. CHANNEL LINING, OR CUT-OFF WALL, PROVIDE 1/4" EXP JOINT BETWEEN BACK OF CURB & CHANNEL LINING AND/OR WALL.

B. VARIABLE, DEPRESS AS NEEDED.

C. DRIVE NO. 4 PINS 18" DEEP IN HOLES DRILLED @ 2" O.C. IN EXISTING PAVEMENT, SEAL WITH EPOXY.

D. EXISTING ASPHALT CONCRETE (AC) OR PORTLAND CEMENT CONCRETE (PCC) PAVEMENT.

E. THEORETICAL FACE OF CURB OR FLOWLINE.

F. TRAFFIC SIDE.

G. 3/4" RADIUS.

H. 1-1/2" RADIUS.

J. 2" RADIUS.

K. 24" RADIUS.

L. TACK COAT.

M. DIMENSIONS AT ROUNDED CORNERS MEASURED TO INTERSECTION OF STRAIGHT LINES.

N. 4" AC: MAJOR LOCAL OR BETTER (SP-III)
3" AC: LOCAL RESIDENTIAL STREET (TYPE C)
2" AC: BICYCLE PATH (TYPE B, RESIDENTIAL)

P. 8" SCARIFIED AND COMPACTED SUBGRADE. 95% MINIMUM COMPACTION PER SECTION 301.

Q. AC PAVEMENT.

R. #4 CONT. BETWEEN JOINTS 3" COVER AT JOINTS.

S. #3 PINS @ 3'-0" O.C. W/STD. HOOK.

GENERAL NOTES
SEE COA DRAWING 2415A

| REVISIONS | CITY OF ALBUQUERQUE |
|---|---|
| 9/91<br>11/14/91<br>12/15/92<br>3/30/94 | PAVING<br>CURB AND GUTTER &<br>TEMPORARY PAVING SECTION<br>DWG. 2415B JANUARY 2003 |

C1 PAVING DETAILS (COA STD DWG 2415B)
NTS

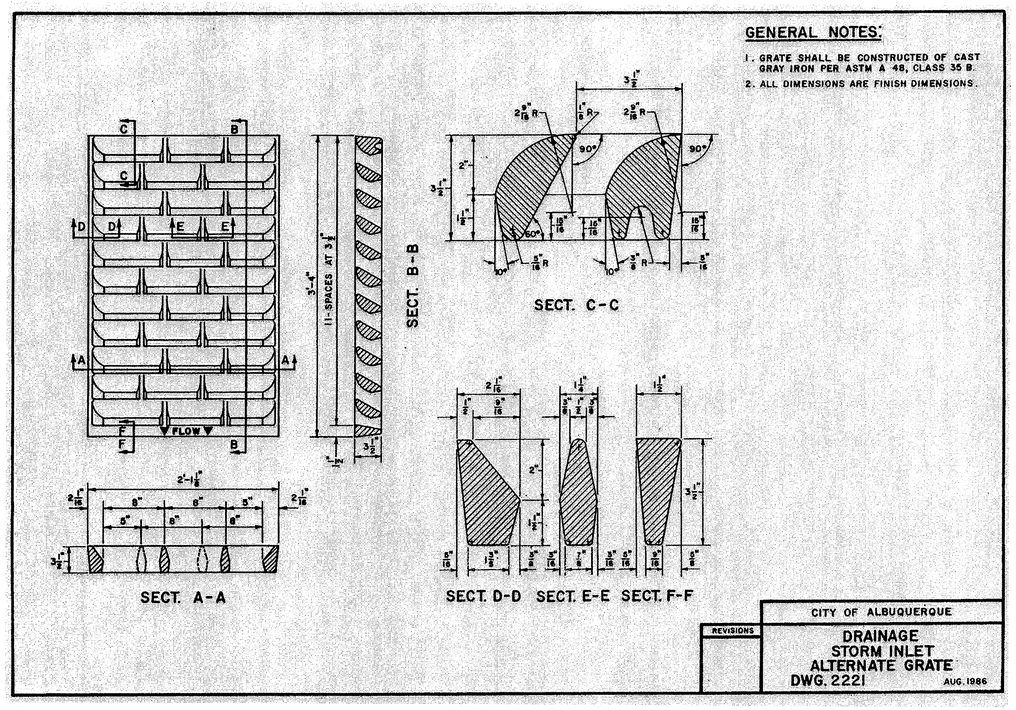


## GENERAL NOTES:

1. GRATE SHALL BE CONSTRUCTED OF CAST GRAY IRON PER ASTM A 48, CLASS 35 B.
2. ALL DIMENSIONS ARE FINISH DIMENSIONS.

| REVISIONS | CITY OF ALBUQUERQUE |
|---|---|
| | DRAINAGE<br>STORM INLET<br>ALTERNATE GRATE<br>DWG. 2221 AUG. 1986 |

C3 STORM INLET ALTERNATE GRATE (COA STD DWG 2221)
NTS

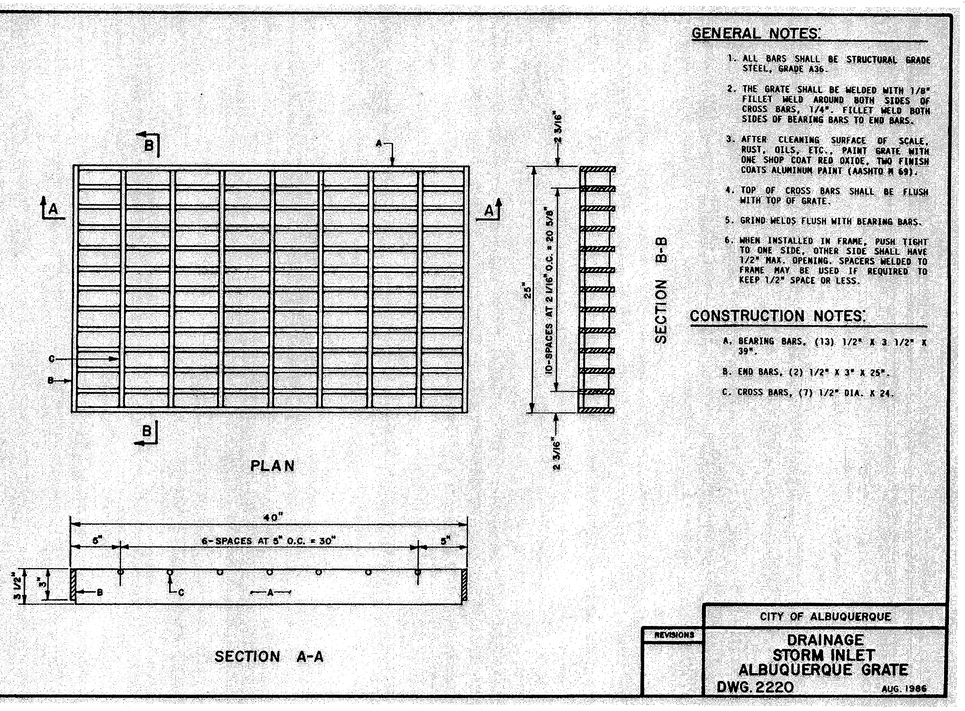


## GENERAL NOTES:

1. ALL BARS SHALL BE STRUCTURAL GRADE STEEL, GRADE A36.
2. THE GRATE SHALL BE WELDED WITH 1/8" FILLET WELD AROUND BOTH SIDES OF CROSS BARS, 1/4". FILLET WELD BOTH SIDES OF BEARING BARS TO END BARS.
3. AFTER CLEANING SURFACE OF SCALE, RUST, OILS, ETC., PAINT GRATE WITH ONE SHOP COAT RED OXIDE, TWO FINISH COATS ALUMINUM PAINT (AASHTO M 69).
4. TOP OF CROSS BARS SHALL BE FLUSH WITH TOP OF GRATE.
5. GRIND WELDS FLUSH WITH BEARING BARS.
6. WHEN INSTALLED IN FRAME, PUSH TIGHT TO ONE SIDE, OTHER SIDE SHALL HAVE 1/2" MAX. OPENING. SPACERS WELDED TO FRAME MAY BE USED IF REQUIRED TO KEEP 1/2" SPACE OR LESS.

## CONSTRUCTION NOTES:

A. BEARING BARS, (13) 1/2" X 3 1/2" X 39".

B. END BARS, (2) 1/2" X 3" X 25".

C. CROSS BARS, (7) 1/2" DIA. X 24.

| REVISIONS | CITY OF ALBUQUERQUE |
|---|---|
| | DRAINAGE<br>STORM INLET<br>ALBUQUERQUE GRATE<br>DWG. 2220 AUG. 1986 |

A1 STORM INLET ALBUQUERQUE GRATE (COA STD DWG 2220)
NTS

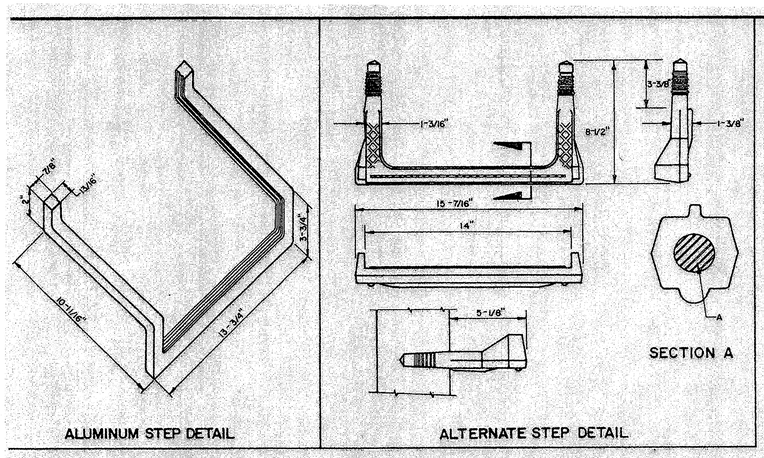


## GENERAL NOTES:

1. ALUMINUM STEP, ALCOA NO 12653A OR APPROVED EQUAL.
2. ALTERNATE STEP SHALL BE POLYPROPOLENE - MOLDED OVER 1/2" STEEL REINFORCEMENT MODEL NO. PS-2-PFS, W.A. INDUSTRIES INC., OR APPROVED EQUAL.
3. STORM INLETS: INLETS GREATER THAN 4' DEEP SHALL HAVE STEPS INSTALLED IN DOWNSTREAM FACE OR INLET WALLS. STEPS SHALL PROTRUDE 7" FROM THE WALL AND BE CENTERED 12" FROM FACE OF CURB. STEPS SHALL BE 12" APART, WITH THE TOP STEP +/- 18" FROM TOP OF GRATE AND THE BOTTOM STEP NO MORE THAN 16" ABOVE THE CONCRETE FILL IN THE BOTTOM OF THE INLET.
4. DRAINAGE CHANNELS: CHANNELS SHALL HAVE STEPS FOR ACCESS AND RESCUE INSTALLED PER DETAILS ON DWG. 2261. STEPS SHALL BE INSTALLED ON BOTH SIDES OF THE CHANNEL AND SHALL BE LOCATED IMMEDIATELY BEFORE THE INLET AND AFTER OUTLET TRANSITIONS FOR CROSSING STRUCTURES OR AS NOTES ON THE PLANS.

## CONSTRUCTION NOTES:

A. 1/2" GRADE 60 STEEL REINFORCEMENT.

RECEIVED
JUN 24 2013
LAND DEVELOPMENT SECTION

| REVISIONS | CITY OF ALBUQUERQUE |
|---|---|
| 8/20/92 | DRAINAGE<br>STEP DETAILS<br>DWG. 2229 AUGUST 1986 |

A3 STEP DETAILS (COA STD DWG 2229)
NTS

H21-D036
13/13

WILSON & COMPANY
4900 Lang Avenue NE
Albuquerque, NM 87109
Phone: (505) 348-4000

CONSULTANTS

SEAL
MARIO D. JUAREZ NEW MEXICO 15340 6-24-13 PROFESSIONAL ENGINEER

PROJECT NAME
MATHESON PARK ELEMENTARY
SITE IMPROVEMENTS
ALBUQUERQUE, NM

| MARK | DATE | DESCRIPTION |
|---|---|---|

PROJECT NO: 10-600-028-00
DRAWN BY: JLL
CHECKED BY: TJA
SHEET TITLE
STORM INLET DETAILS
SHEET
C-505

M:\IDS\10-600-028-00\CADD\SHEETS\06_DETAILS\1060028_DTL05.DWG 6/14/2013 1:22 PM