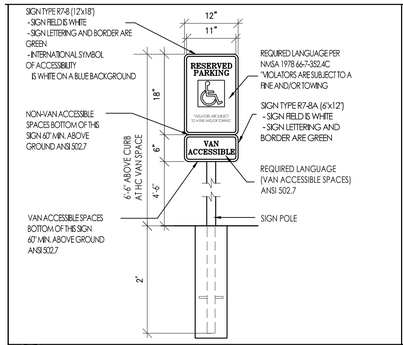

A-7 HC PARKING SIGNAGE (EXISTING) ELEVATIONS 3/4"=1'-0"

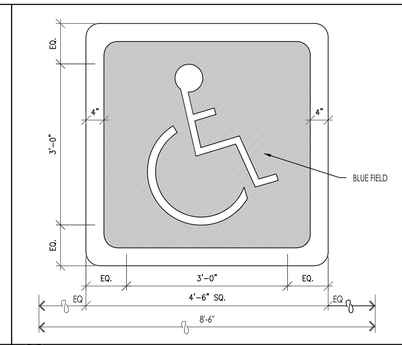

A-8 HC PARKING MARKING (EXISTING) PLAN 3/4"=1'-0"

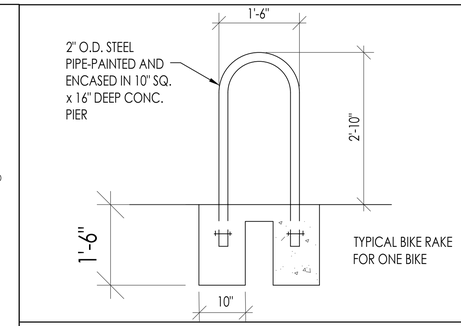

C1 BIKE RACK ELEVATION 3/4"=1'-0"

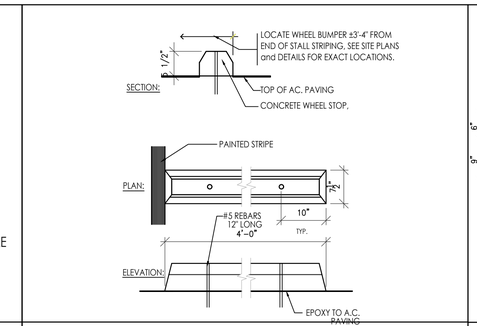

C2 WHEEL BUMPER DETAIL 3/4"=1'-10"

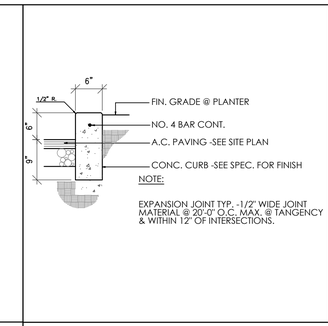

C3 CONCRETE CURB DETAIL 3/4"=1'-10"

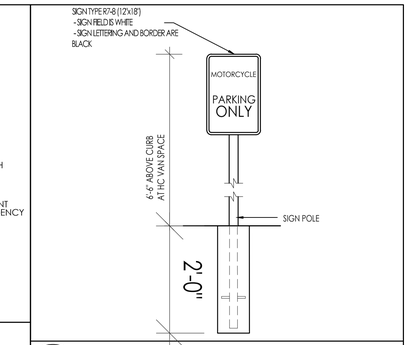

A-7 MOTORCYCLE SIGNAGE ELEVATIONS 3/4"=1'-0"

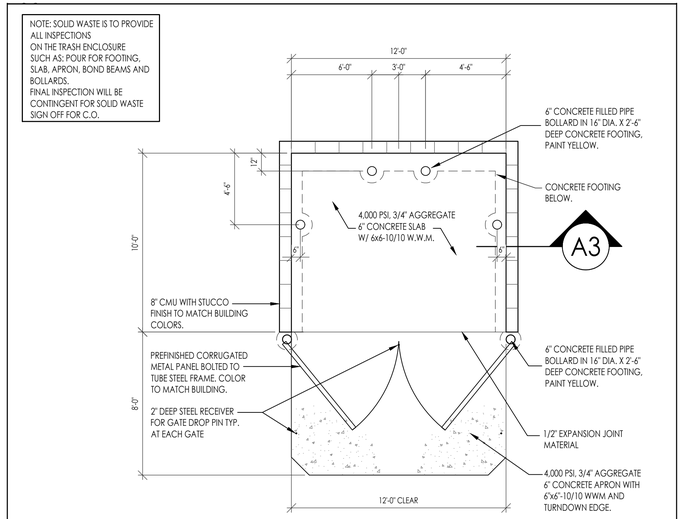

A1 REFUSE ENCLOSURE PLAN 1/4"=1'-0"

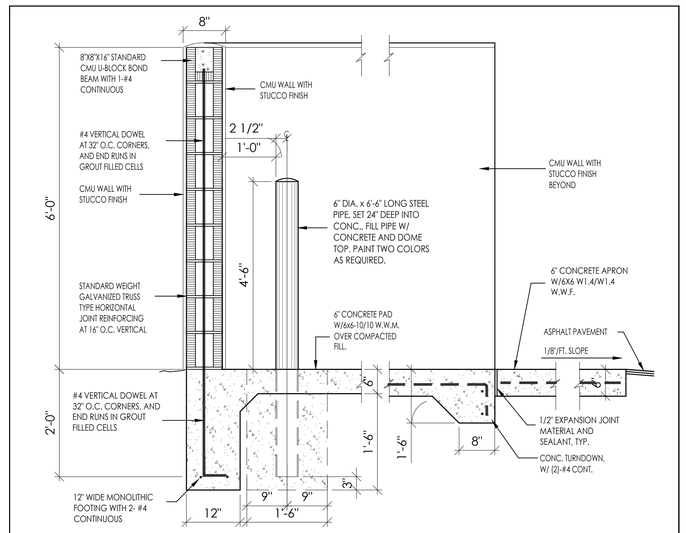

A3 ENCLOSURE CMU WALL DETAIL 1/4"=1'-0"

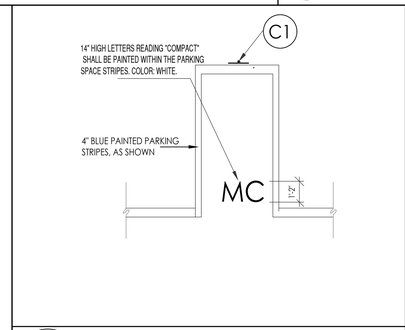

A5 COMPACT PARKING SPACE PAVEMENT MARK $\frac{1}{4}$"=1'-0"

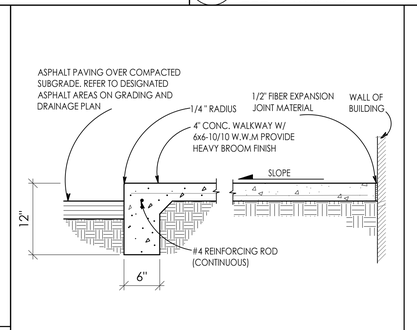

A6 CONCETE CURB/SIDEWALK TO ASPHALT PAVING DETAIL N.T.S.

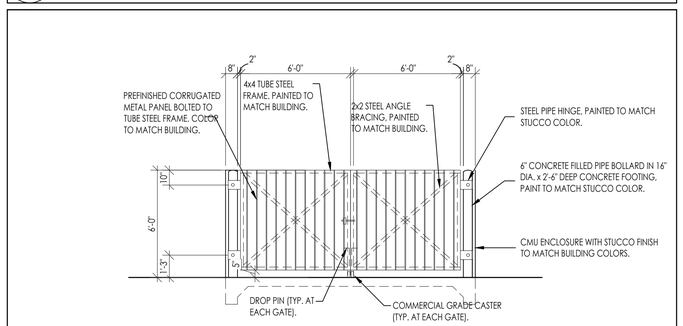

A2 REFUSE ENCLOSURE ELEVATION 1/4"=1'-0"

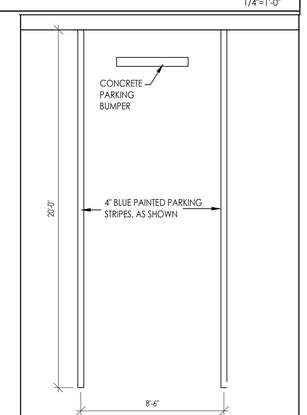

A9 4" WIDE PAINTED STRIPE DETAIL $\frac{3}{4}$"=1'-10"

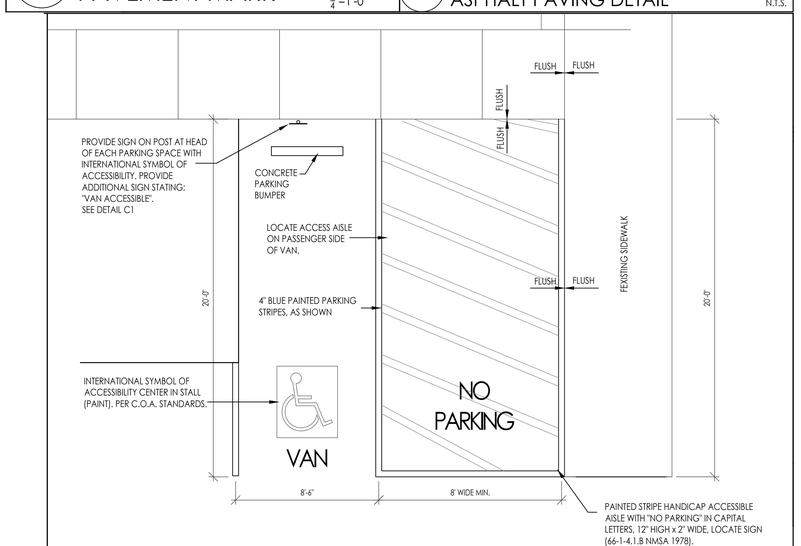

A-4 HC PARKING STRIPING PLAN 1/4"=1'-0"

ECOS INFANTILES 319
SITE DETAILS
319 7TH STREET NW. 87102
ALBUQUERQUE, NM
PROJECT #2357

REVISION DATE

STATE OF NEW MEXICO
RICHARD P. BENNETT
No. 1240
2/27/2024
REGISTERED ARCHITECT

RBA ARCHITECTURE, PC
AND ASSOCIATES DESIGN
1104 Park Ave. SW
Albuquerque, NM 87102
(505)242-1589 (505)242-6485
www.rba2001.com

DATE
2/26/2024

SHEET NUMBER
AS-2.0