TRAFFIC CIRCULATION LAYOUT APPROVED

Ernest Armijo — Signed — 11/10/2022 — Date

City of Albuquerque
Solid Waste Management Department
4600 Edith Blvd NE
Albuquerque, NM 87107

Minimum Requirements for a Swanson Enclosure

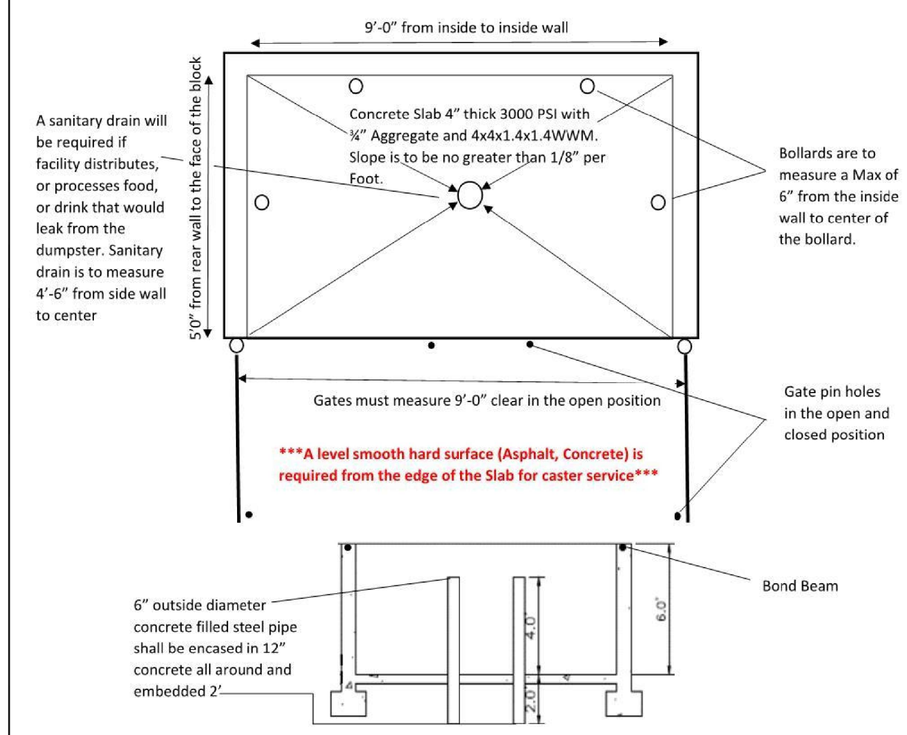

Additional information concerning these specifications may be obtained by calling the Solid Waste department at (505) 761-8125

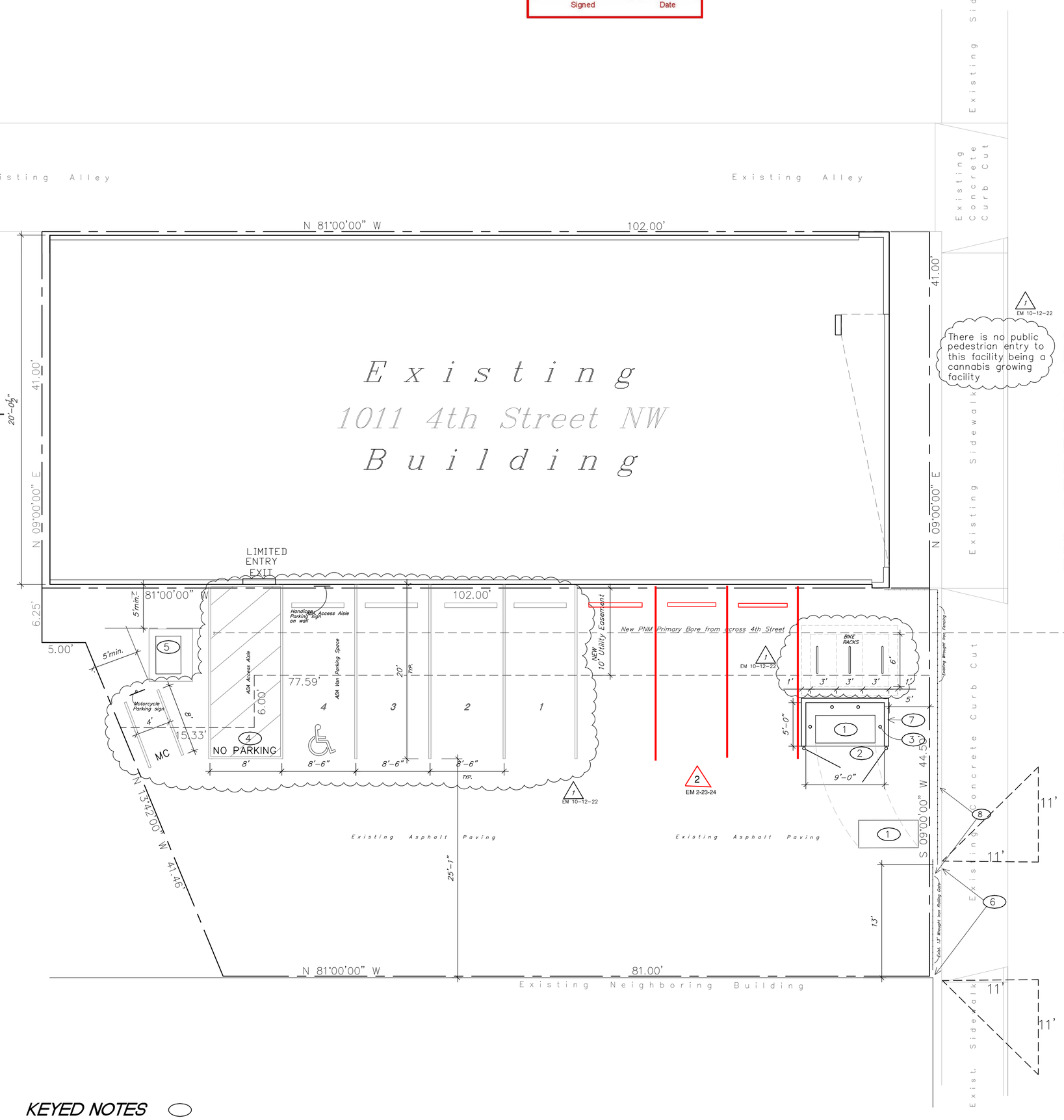

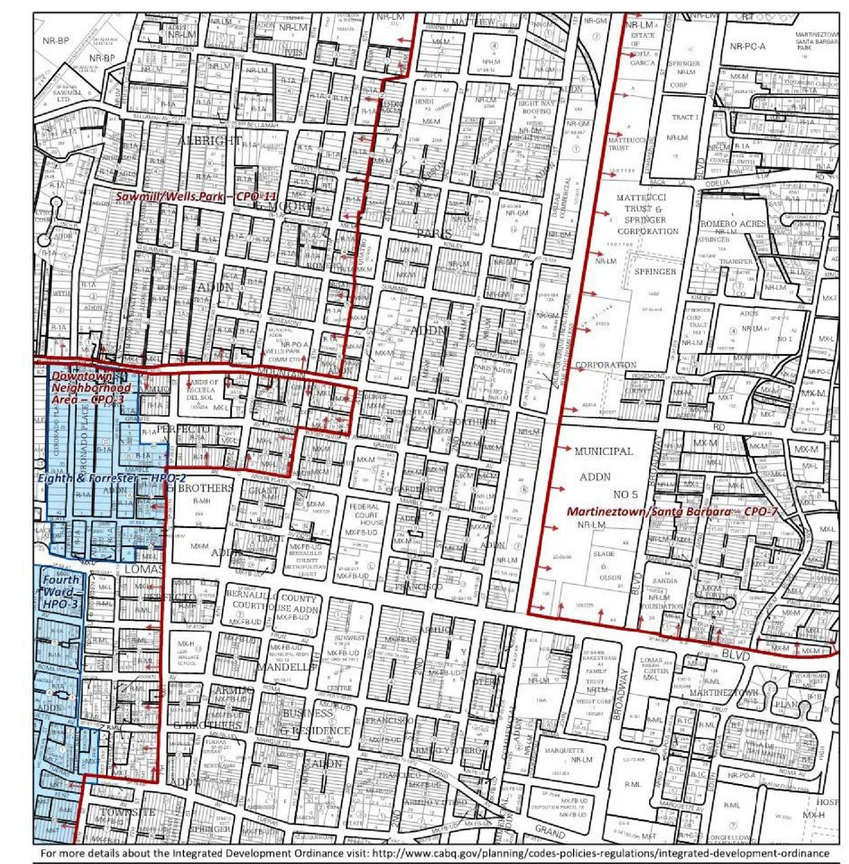

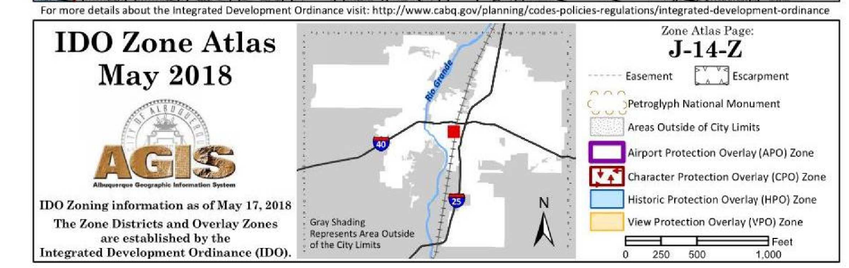

Unused Curb Cuts must be replaced w/ sidewalk, curb & gutter per City standard drawing 2430 & 2415A

All broken or cracked sidewalk must be replaced with sidewalk and curb & gutter per City standard drawing 2430 Standard C & G

LANDSCAPING AND SIGNAGE WILL NOT INTERFERE WITH CLEAR SIGHT REQUIREMENTS, THEREFORE, SIGNS, WALLS, TREES, AND SHRUBBERY BETWEEN 3' AND 8' TALL (AS MEASURED FROM THE GUTTER PAN) WILL NOT BE ACCEPTABLE IN THE CLEAR SIGHT TRIANGLE

11' 11'

Bicycle racks shall be sturdy and anchored to a concrete pad
A 1-foot clear zone around the bicycle parking stall shall be provided
Bicycle parking spaces shall be at least 6 feet long and 2 feet wide

a. The rack shall be a minimum 30" tall and 18" wide
b. The bicycle frame shall be supported horizontally at 2 or more places Comb/toaster racks are not allowed
c. The rack shall be designed to support the bicycle in an upright position See the DPM 7-4(k)(2) & IDO 14-16-5-5(E) for additional information
d. The rack allows varying bicycle frame sizes and styles to be attached
e. The user is not required to lift the bicycle onto the bicycle rack
f. Each bicycle parking space is accessible without moving another bicycle

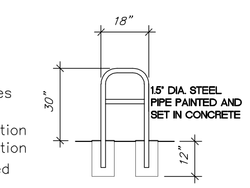

BICYCLE RACK
N.T.S.

STATE OF NEW MEXICO — ERIC V. MUNN — No. 005183 — REGISTERED ARCHITECT
10-24-22

PARKING CRITERIA UC-AC-MS-PT

CANNABIS CULTIVATION 3757 SF – 1 SPACE PER 1000 SF GROSS
3757 SF / 1000 = 3.7 x 1 = 4 SPACES REQUIRED
4 SPACES REQUIRED (x30% on Transit Route) = 3 REQUIRED SPACES
3 SPACES PROVIDED
1 OF WHICH IS HANDICAPPED ACCESSIBLE
1 MOTORCYCLE SPACE REQUIRED, 1 MOTORCYCLE SPACE PROVIDED
3 BICYCLE SPACES REQUIRED, 3 BICYCLE SPACES PROVIDED

EM 10-12-22

REFUSE

A NEW 1 C.Y. DUMPSTER AND DUMPSTER PAD/ENCLOSURE WILL BE PROVIDED

SITE LIGHTING

ANY EXTERIOR BUILDING MOUNTED OR SITE LIGHT FIXTURES WILL NOT SHINE DIRECTLY ON ANY PUBLIC RIGHT-OF-WAY OR OTHER RESIDENTIAL/COMMERCIAL PREMISES

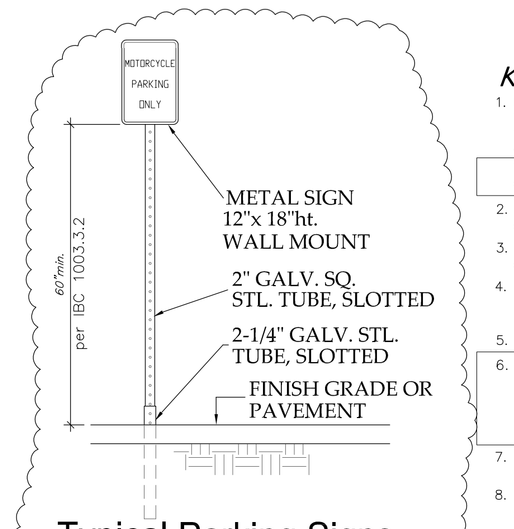

Typical Parking Signs
N.T.S. NMAC, SECTION 14.7.2.19 J

EM 10-12-22

KEYED NOTES

1. New 1 cubic yard dumpster to be provided by Owner, must meet City Solid Waste Department size standards for this size of dumpster, Owner will coordinate There will be no hazardous/contaminated materials disposed of here, this facility will not process food or drink.
   The Facility workers will have to wheel the dumpster 2' from the gate opening on service day, and place it back into the trash enclosure after being serviced
2. Concrete dumpster slab: 4" thick 3000 PSI (28 days) with 3/4" aggregate and 4 x 4 1.4 x 1.4 welded wire fabric
3. 6" o.d. steel pipe bollard filled with concrete and encased in 12" thick concrete min. all around below grade. Concrete to be a min. of 24" below grade, 4' ht bollards
4. H.C. Parking Space & Access Aisle, NO PARKING letters shall be capital letters 1'ht. minimum and 2" wide, at rear of space where an adjacent vehicle's rear tires would be placed
5. Transformer and Concrete pad
6. BUSINESS OWNER SHALL PROVIDE, TO THE SOLID WASTE REPRESENTATIVE, ACCESS TO THE PROPERTY BY WAY OF KEY FOB, A CLICKER/REMOTE OPENER, OR CITY LOCK. THIS IS NOT A LIMITED ACCESS POINT
   THE SOLID WASTE REPRESENTATIVES MUST HAVE ACCESS TO THE SITE FROM 5 AM to 8 PM ON SCHEDULED PICK-UP DAYS
7. 6" CMU Dumpster enclosure, Tan or desert sand color to match exsting adjacent building Provide horizontal reinforcement 16"o.c.
8. Existing Fence and gate shall be repaired as necessary to meet City Solid Waste Department access requirements

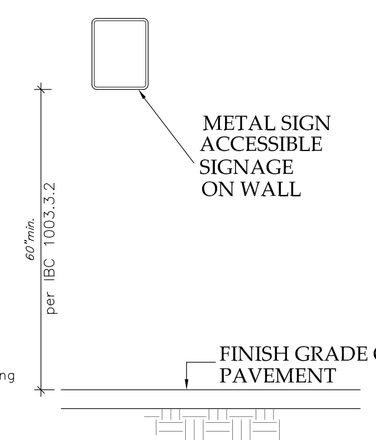

Typical Parking Signs
N.T.S. NMAC, SECTION 14.7.2.19 J

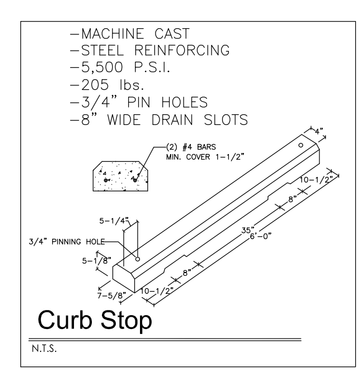

Curb Stop
N.T.S.

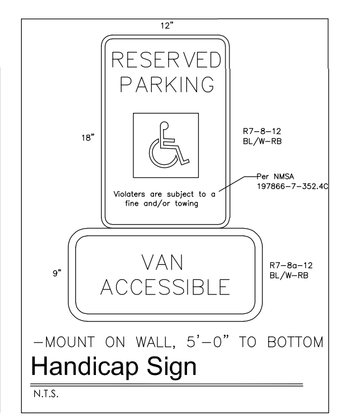

Handicap Sign
N.T.S.

TRAFFIC CIRCULATION LAYOUT

1/8" = 1'-0"

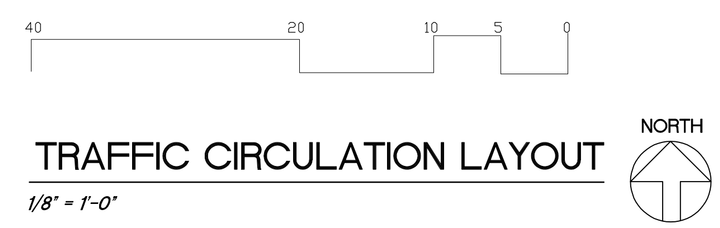

CANNABIS GROWING FACILITY REMODEL

TJ Design Services — Eric V Munn — 717 Cagua Drive NE, Albuquerque, NM 87108 — 505-688-2914

ASSET PRO LLC
1011 4th STREET NW ALBUQUERQUE, NEW MEXICO 87102

SHEET
TCL
2 — 2-23-24

	DATE
	9-12-22
1	10-12-22