DRAINAGE INFORMATION SHEET

PROJECT TITLE: Prairie Hills Apartments ZONE ATLAS/DRNG. FILE #: J22/D36

LEGAL DESCRIPTION: Parcel "F" , Panorama Heights

CITY ADDRESS: 1001 Service Road N.E.

ENGINEERING FIRM: Espey, Huston & Assoc. CONTACT: Dennis A. Lorenz

ADDRESS: 4801 Indian School N.E. Suite 204 Albuquerque, N.M. 87110 PHONE: (505) 255-1625

OWNER: A.G. Spanos Construction CONTACT: Paul Inglat

ADDRESS: 20 First Plaza, Suite 511 Albuquerque, N.M. 87102 PHONE: (505) 247-8783

ARCHITECT: N/A CONTACT:

ADDRESS: PHONE:

SURVEYOR: Espey, Huston and Assoc. CONTACT: Tim Aldrich

ADDRESS: Same as above PHONE: (505) 255-1625

CONTRACTOR: A.G. SPANOS CONSTRUCTION CONTACT: PAUL INGLAT

ADDRESS: SAME PHONE: 247-8783

RECEIVED
APR 02 1986
HYDROLOGY SECTION

PRE-DESIGN MEETING:

X YES

___ NO

___ COPY OF CONFERENCE RECAP SHEET PROVIDED

DRB NO. -

EPC NO. 2-84-108

PROJ. NO. -

TYPE OF SUBMITTAL:

___ DRAINAGE REPORT

___ DRAINAGE PLAN

___ CONCEPTUAL GRADING & DRAINAGE PLAN

___ GRADING PLAN

___ EROSION CONTROL PLAN

X ENGINEER'S CERTIFICATION

CHECK TYPE OF APPROVAL SOUGHT:

___ SKETCH PLAT APPROVAL

___ PRELIMINARY PLAT APPROVAL

___ SITE DEVELOPMENT PLAN APPROVAL

___ FINAL PLAT APPROVAL

___ BUILDING PERMIT APPROVAL

___ FOUNDATION PERMIT APPROVAL

X CERTIFICATE OF OCCUPANCY APPROVAL

___ ROUGH GRADING PERMIT APPROVAL

___ GRADING/PAVING PERMIT APPROVAL

___ OTHER _____ (SPECIFY)

DATE SUBMITTED: APRIL 2, 1986

BY: Dennis A. Lorenz

City of Albuquerque

P.O. BOX 1293 ALBUQUERQUE, NEW MEXICO 87103

DESIGN HYDROLOGY SECTION
123 Central NW, Albuquerque, NM 87102
(505) 766-7644

November 8, 1984

Mr. Dennis Lorenz
Espey, Huston & Associates
4801 Indian School Rd. N.E.
Albquerque, N.M. 87110

RE: OFFSITE DRAINAGE FOR PRIARIE HILL (J22-D36) RECEIVED 10/9/84

Dear Mr. Lorenz:

I agree with the analysis done at Chelwood and Lomas Blvd. N.E., the 10.1 cfs discharge and 0.85 cfs/acre appear to be a good criteria for the drainage area. However, before conceptual approval can be given the following concerns should be addressed, please address the method in which Prairie Hills discharge will travel through Quail Ridge Subdivision. How will Quail Ridge ponding areas discharge? Also, will the inlets to the ponds be changed to accept or pass the Prairie Hills discharge?

If I can be of further assistance, please contact me at 766-7644.

Sincerely yours,

Carlos A. Montoya

Carlos A. Montoya
Civil Engineer/Hydrology

CAM/ccg

FILE COPY

City of Albuquerque

P.O. BOX 1293 ALBUQUERQUE, NEW MEXICO 87103

DESIGN HYDROLOGY SECTION
123 Central NW, Albuquerque, NM 87102
(505) 766-7644

April 7, 1986

Jim Leymon
Espey, Huston & Associates, Inc.
4801 Indian School Road, NE Suite 204
Albuquerque, New Mexico 87110

RE: CERTIFICATION FOR PRAIRIE HILLS APARTMENTS (J-22/D36)
CERTIFICATION STATEMENT DATED APRIL 2, 1986

Dear Mr. Leymon:

Based on the information provided on your April 2, 1986 resubmittal, the above referenced certification is acceptable.

If I can be of further assistance, please feel free to call me at 766-7644.

Cordially,

Bernie J. Montoya

Bernie J. Montoya, C.E.
Engineering Assistant/Hydrology

BJM/bsj

FILE COPY

City of Albuquerque

P.O. BOX 1293 ALBUQUERQUE, NEW MEXICO 87103

KEN SCHULTZ
MAYOR

August 31, 1988

A.G. Spanos Construction, Inc.
1341 W. Robinhood Drive
Stockton, California 95207

RE: DRAINAGE COMPLAINT FROM THE QUAIL RIDGE SUBDIVISION
ALBUQUERQUE, NEW MEXICO (J-22/D36)

Gentlemen:

A drainage complaint was filed with our office on July 12, 1988 regarding overflow from Pond "B" which flows entered Lots 23 and 24 of the Quail Ridge Subdivision causing a garden wall to fail.

A subsequent field inspection and a topographic survey was conducted by the City's Survey Section, which revealed a grade deviation from the approved as-built certification provided by your consultant (Espey, Huston & Associates, Inc.). In particular, the elevation of the berm adjacent to Lots 23 and 24 is approximately .2 feet lower than the overflow elevation which resulted in the storm runoff exiting Pond "B" and collapsing a garden wall adjacent to Lots 23 and 24.

The maintenance of the berm is the responsibility of the owner, hence we are requesting that you make the necessary corrections as soon as possible to eliminate a recurrence of a similar problem.

Please contact me when the corrections have been completed. If I can be of further assistance, please feel free to call me at 768-2650.

Cordially,

Bernie J. Montoya

Bernie J. Montoya, C.E.
Engineering Assistant

CERTIFIED MAIL RECEIPT NO. P 261 028 315

xc: Jim Leyman, Espey, Huston & Associates, Inc.
Sharon McPhee, Prairie Hills Apartments
George Selvia, Director, PWD
Councillor M. Wiener

BJM/bsj
(WP+75)

CITY OF ALBUQUERQUE
DRAINAGE COMPLAINT REPORT

Location: Tramway N. of Lomas Sheet 1 of 1
PRAIRIE HILLS APARTMENTS

Reported by: RICHARD ANDES 1012 PAWNEE Phone 292-3379 - Home
844-2149 - Work

Address: Quail Ridge Subdivision Ext.

Complainant: "Same as above" Phone

Address Ext.

Taken by: Roger Green Date 7/12/88

COMPLAINT: Pond B overflows to west and floods houses to west. Spillway may be higher than top of west berm or else blocked. Please survey and compare to "As-Builts".

Referred to:

INVESTIGATION — CAUSE: RUNOFF FROM PRAIRIE HILLS POND OVERTOPPING WEST BERM & RUNNING INTO 1012-1016 PAWNEE BACKYARDS. WALL @ 1012 HAS COLLAPSED, PONDS HAVE INSUFFICIENT CAPACITY

Recommendation:

Investigated by: Rick Duran Date

Action taken: Survey done on Pond "B" survey shows that the berm within certain places is below the spillway elevation. Letter is being sent to Engineer who certified the drainage concept. Also to owner A.G. Spanos

Taken by: Date

Follow Up:

Taken by: Date

Zone Atlas: J-22

Drainage Map: J22/D36

Complaint Report No.

Date

Plan No.

Date

Project No.

Approved

ESPEY, HUSTON & ASSOCIATES, INC.
Engineering & Environmental Consultants
4801 INDIAN SCHOOL ROAD, N.E., SUITE 204
ALBUQUERQUE, N.M. 87110
(505) 255-1625

EH&A Job No. 5631

CORPORATE OFFICE
P.O. BOX 519
AUSTIN, TEXAS 78767

DRAINAGE REPORT
FOR
PRAIRIE HILLS APARTMENTS

RECEIVED
FEB 11 1985
HYDROLOGY SECTION

Prepared for:

A.G. Spanos
20 First Plaza
Suite 511
Albuquerque, New Mexico 87102

February 1985

ESPEY, HUSTON & ASSOCIATES, INC.

TABLE OF CONTENTS

	Page
PURPOSE AND SCOPE	1
LOCATION AND DESCRIPTION	2
EXISTING DRAINAGE CONDITIONS	5
PROPOSED DRAINAGE CONDITIONS	7
EROSION CONTROL	9
CONCLUSIONS	10
CALCULATIONS	12

LIST OF FIGURES AND EXHIBITS

VICINITY MAP - FIGURE 1	3
SOILS MAP - FIGURE 2	4
FLOOD HAZARD MAP - FIGURE 3	6
EXHIBIT A	11
EXISTING DRAINAGE BASIN BOUNDARIES - PLATE 1	Back pocket
GRADING AND DRAINAGE PLAN - PLATES 2 & 3	Back Pocket
QUAIL RIDGE DRAINAGE BASIN BOUNDARIES - PLATE 4	Back pocket
QUAIL RIDGE STORM DRAINAGE IMPROVEMENTS - PLATE 5	Back pocket

PURPOSE AND SCOPE

The purpose of this report is to establish the criteria for controlling surface runoff from the Prairie Hills Apartments in a manner which is acceptable to the City of Albuquerque and the Albuquerque Metropolitan Flood Control Authority (AMAFCA). The plan determines the excess runoff resulting from 100-year/6-hour and 10-year/6-hour frequency storms falling within the project site and contributing drainage basins under existing and developed conditions.

The scope of this plan is to ensure that the project site will be protected from storm runoff and that the project will not increase the flooding potential to adjacent properties and downstream areas.

LOCATION AND DESCRIPTION

The Prairie Hills Apartments are located on Service Road N.E., just west of Tramway Boulevard N.E., approximately 400 feet north of Lomas Boulevard N.E. The site is more particularly described as Parcel "F", Panorama Heights. The vicinity map (See Figure 1) graphically depicts the location of the site.

The site is approximately 11.84 acres in size and is presently undeveloped. The natural topography slopes from east to west at approximately 5%. The major soil group present on this site is Embudo-Tijeras complex. The soil is found on slopes of 0% to 9% on the east mesa. The unit is composed of approximately 50% Embudo gravelly fine sandy loam and about 35% Tijeras gravelly fine sandy loam (See Figure 2). Also included in this unit are areas of Tesajo, Millett and Wink Soils, which make up the remaining 15% of the unit. The U.S.D.A. Soils Conservation Service has classified this unit as a type "B" soil.

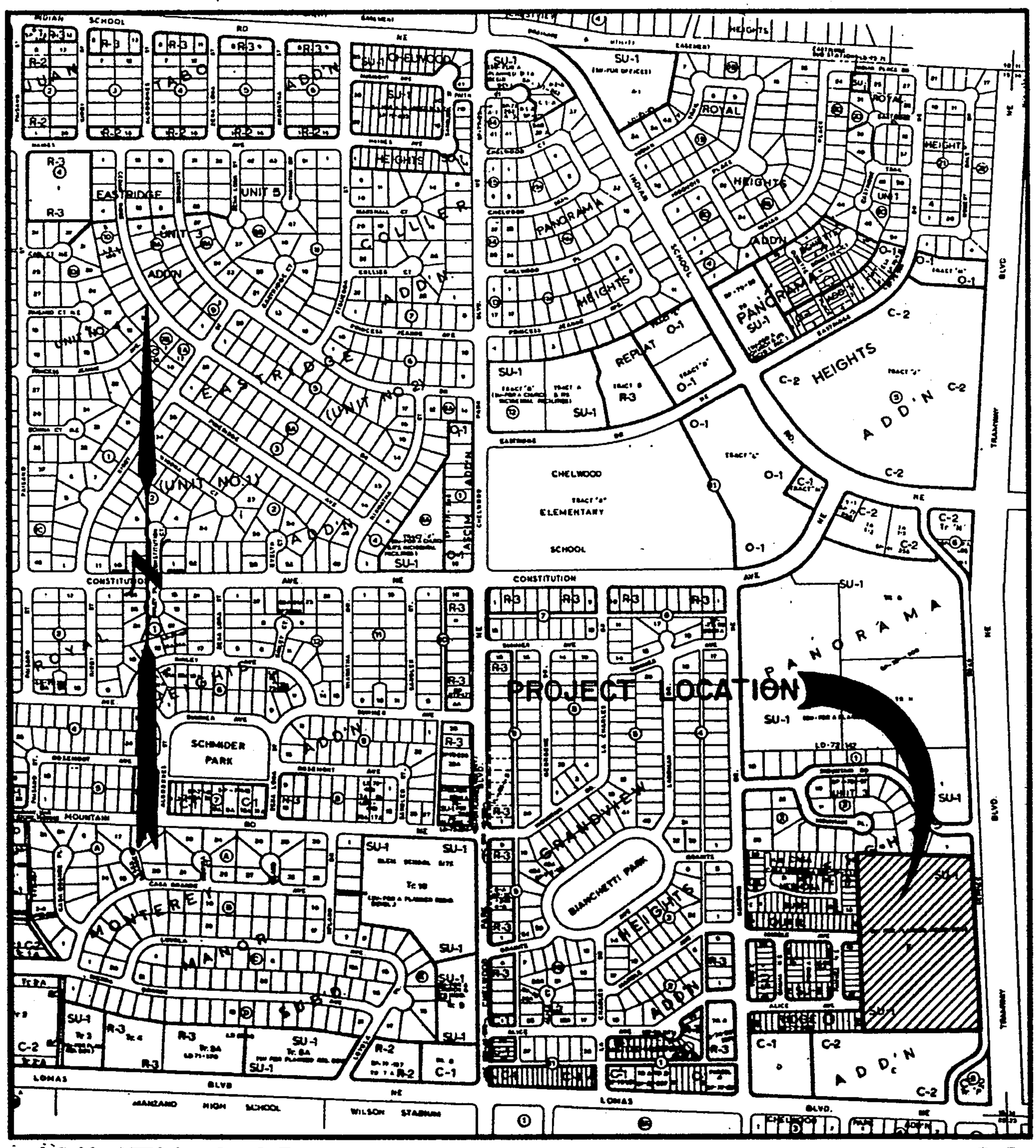

VICINITY MAP

SCALE 1" = 800'

J-22

FIGURE 1

EXISTING DRAINAGE CONDITIONS

The project site is currently undeveloped. The site is bounded on the east by Tramway Service Road (unimproved), on the south by undeveloped land, and on the north and west by developed residential areas. No off-site flows enter the site as all off-site flows are intercepted by the Tramway channel.

Plate I illustrates the existing on-site drainage basins affecting the site and adjacent downstream areas (See back panel). Basin "A" discharges directly into Marble Avenue N.E. and then through existing ponding areas in Quail Ridge Subdivision. Basin "B" also discharges directly into Alice Avenue N.E. and then through existing ponding areas in Quail Ridge Subdivision. Basin "C" discharges onto the undeveloped property to the south where it eventually outfalls into Lomas Boulevard N.E.

As mentioned above, Basins "A" and "B" discharge directly into Marble Avenue and Alice Avenue respectively. Quail Ridge Subdivision was developed with four (4) retention ponds that collect storm water from undeveloped Parcel "F", Panoram Heights and Quail Ridge Subdivision. No outfall is provided to drain the retention ponds, contrary to current drainage ordinances.

As shown by Plate J-22 of the Albuquerque Master Drainage Study, Volume III (See Figure 3) this site does not lie within a designated flood hazard zone.

PROPOSED DRAINAGE CONDITIONS

The proposed drainage plan (See Plates 2 & 3) in included in the back pocket of this report. The plan shows 1) drainage basins; 2) developed peak flow rates; 3) existing and proposed elevations indicated by spot elevations and contours at one foot intervals; 4) continuity between proposed and existing elevations; 5) proposed buildings, private streets, parking areas, community facilities, and landscaping improvements; 6) proposed drainage patterns and structures.

The proposed development will consist of a 260 unit apartment complex, with 1 recreation - office complex, two swimming pools, tennis courts, covered parking and landscaping.

As per pre-design conferences with City Hydrology staff, a downstream analysis was conducted to determine downstream capacity. This analysis is included in this report (See Exhibit A). It was determined that downstream capacity is limited due to inadequate storm sewers and street capacity. The allowable discharge rate for developed land within the drainage basin was established at 0.85 CFS per acre by the analysis. This rate projects to an allowable discharge of10.1 CFS for the Prairie Hills Apartment site. The discharge from Prairie Hills Apartments will be controlled through detention pond facilities.

All storm water discharged from Prairie Hills Apartments drains through Quail Ridge Subdivision (See Plate 4). Quail Ridge Subdivision was developed with four (4) retention pond sites to collect on-site and undeveloped off-site stormwater. The existing retention ponds do not drain, therefore, evaporation and percolation are the only means of removing stormwater from the ponds. Additional stormwater due to the upstream development of Prairie Hills Apartments will further impact the ponds. Further analysis of the Quail Ridge Subdivision ponding scheme (See Exhibit "A") revealed that; 1) the central pond is equipped with an overflow channel sized for developed flows; 2) the three (3) retention ponds

located along Nakomis Drive N.E. have no overflow, therefore excess stormwater will spillover the sidewalk and onto Nakomis Drive; 3) considering the allowable 0.85 CFS/acre discharge rate established by downstream analysis, Quail Ridge Subdivision is over ponding stormwater; and 4) as per the current drainage ordinance retention ponding is illegal.

Further negotiations with Mr. Fred Aguirre resulted in additional studies to determine downstream impact due to the free discharge of stormwater from Quail Ridge Subdivision. This analysis revealed an increase in the street depth at Lomas Boulevard of only 0.03 feet. In light of this, a free discharge was granted to Quail Ridge Subdivision, thus eliminating the existing retention ponds. Prairie Hills Apartments is of course required to detain stormwater at the established rate.

As shown by the plan (See Figures 2 and 3) all stormwater is routed within the Prairie Hills site to a series of detention ponds located along the west end of the site. The detention ponds discharge into Marble Avenue and Alice Avenue at a controlled rate. Overflow spillways are provided to handle flows in excess of the 100-year/6-hour storm.

Stormwater will then bypass the existing ponds within Quail Ridge Subdivision. A continuous concrete channel will be constructed through the central pond and the four (4) existing catch basins will be plugged prohibiting stormwater from entering the ponds along Nakomis (See Figure 5). All facilities within Quail Ridge Subdivision were found to have adequate capacity to accept flows from Prairie Hills Apartments.

EROSION CONTROL

Erosion will not result due to this development. All exposed soils will be ultimately landscaped. Temporary erosion control measures will be taken during the construction phase. Temporary erosion control will consist of a ditch-dyke system placed along the south and west boundaries of the site (See Plate 2). Temporary sedimentation ponds will be constructed at the site of the permanent detention ponds. All temporary erosion control measures shall remain in place until permanent drainage facilities are completed.

CONCLUSIONS

The following conclusions can be made with regard to the development of Prairie Hills Apartments:

1. This site does not lie within a designated flood hazard zone.

2. Off-site analysis establishes the allowable discharge rate at 0.85 CFS per acre.

3. Off-site analysis supports the elimination of the four (4) existing retention ponds at Quail Ridge Subdivision.

4. The Quail Ridge Subdivision drainage improvements will be constructed concurrently with this project.

5. Positive drainage will be provided away from all improvements.

6. The proposed improvements will not increase the flooding potential adjacent of downstream properties.

7. Erosion will not result due to this development.

8. This drainage plan is in complete compliance with the approved conceptual drainage plan and downstream analysis.

ESPEY, HUSTON & ASSOCIATES, INC.
Engineering & Environmental Consultants
4801 INDIAN SCHOOL ROAD, N.E., SUITE 204
ALBUQUERQUE, N.M. 87110
(505) 255-1625

CORPORATE OFFICE
P.O. BOX 519
AUSTIN, TEXAS 78767

October 2, 1984

Mr. Carlos Montoya
Civil Engineer/Hydrology
City of Albuquerque
Post Office Box 1293
Albuquerque, New Mexico 87103

SUBJECT: Off-Site Drainage Analysis for Prairie Hills Apartments

Dear Carlos:

Transmitted herewith for your review is one copy of the revised off-site analysis for Prairie Hill Apartments. I have expanded the drainage basin maps to clarify the drainage basins that I am using.

In response to your questions regarding the total drainage area and why the area bounded by Lomas, Constitution, Chelwood and Nakomis is not considered a part of the sub-basin under study, I have the following comments:

This drainage area does drain into the storm sewer system in question, however, it does so through numerous inlets upstream from analysis point No. 1. The capacity of the mainline in Chelwood is stated in the Albuquerque Master Drainage Study. The point made in the off-site analysis is that the Albuquerque Master Drainage Study failed to consider the bank of inlets located on Lomas, just east of Chelwood. This bank of inlets is the only relief for the sub-basin understudy. By analysis of these inlets and connecter pipe, the calculations demonstrate that this system of inlets has a capacity of 82 CFS. Considering a estimated Q10 = 136 CFS, future development in this area should be required to retain storm water. This retention should be considered temporary, until system "314-03D" is constructed.

I hope this has answered your questions. If I may be of further assistance, please call.

Sincerely,

Dennis Lorenz

/lm

I. INTRODUCTION

THIS DOWNSTREAM ANALYSIS IS PROVIDED AS A SUPPLEMENT TO THE CONCEPTUAL DRAINAGE PLAN SUBMITTED FOR PRAIRIE HILL APARTMENTS. THIS ANALYSIS WILL DETERMINE THE DRAINAGE CRITERIA FOR THE PRAIRIE HILL APARTMENTS AS WELL AS REDEFINING DRAINAGE PARAMETERS AT QUAIL RIDGE SUB'N.

II. RESULTS

THE ANALYSIS POINT UNDER STUDY IS LOCATED AT CHELWOOD AND LOMAS. THIS IS SHOWN IN THE ALB. MASTER DRAINAGE STUDY AS AP 1202. AS SHOWN BY THE HYDROGRAPHS (EXHIBIT A) FROM CITY HYDROLOGY (ENGR DIV.) FOR AP 1202, THE STORM DRAINAGE SYSTEM AT AP 1202 HAS A CAPACITY OF 189 CFS. HOWEVER, THE HYDROGRAPHS DO NOT ACCURATELY DESCRIBE THE

THE FLOW CHARACTERISTS OF THE DRAINAGE BASIN. THE HYDROGRAPHS DO NOT STUDY THE SUB-BASINS AS THEY ENTER EACH POINT OF THE SYSTEM. SUCH IS THE CASE AT CHELWOOD AND LOMAS. STUDYING THE BANK OF INLETS AT CHELWOOD AND LOMAS IT WAS DETERMINED THAT THE 30" CONNECTOR PIPE LIMITS THE CAPACITY OF THIS 'SUB-SYSTEM' TO APPROXIMATELY 82 CFS. THE SUB-BASIN THAT DRAINS INTO THIS 'SUB-SYSTEM' IS APPROXIMATELY 98 ACRES IN SIZE WITH Q_{100} = 207 CFS AND Q_{10} = 136 CFS. THEREFORE, THIS 'SUB-SYSTEM' IS UNDER-SIZED. A UNIT DISCHARGE THEORY WAS THEN APPLIED TO SET THE DISCHARGE PER ACRE AT APPROX 0.85 CFS/AC.

USING A UNIT DISCHARGE APPROACH, IT WAS DETERMINED THAT QUAIL RIDGE SUB'N IS REQUIRED TO POND APPROX

ESPEY, HUSTON & ASSOCIATES INC.
Engineering & Environmental Consultants

SUBJECT _____

PRAIRIE HILL APTS.

SHEET 3 OF ____ BY PV
DATE 8/6/84 CK BY _____

28,570 CF OF STORM WATER WITH A 6.8 CFS DISCHARGE. PRESENTLY QUAIL RIDGE PONDS APPROX 35,330 CF WITH NO POSITIVE DISCHARGE. THEREFORE, QUAIL RIDGE IS PONDING APPROX 7000 CF OF EXCESS STORM WATER.

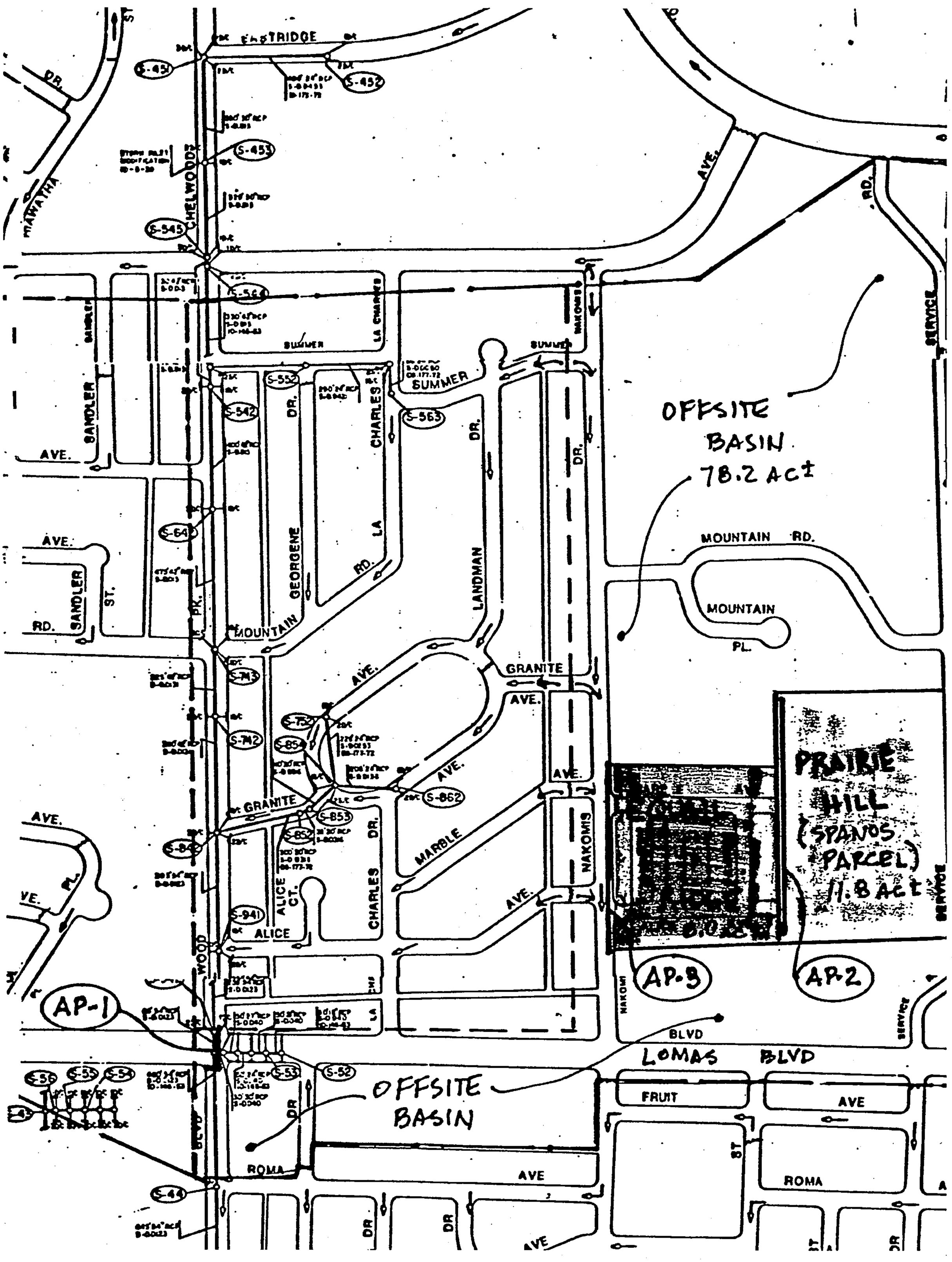
EASTRIDGE
HIAWATHA
DR.
CHELWOOD
AVE.
RD.
SERVICE
S-451
S-452
S-453
S-545
S-561
SUMMER
LA CHARLES
S-552
S-542
S-563
DR.
CHARLES
LA
RD.
GEORGENE
LANDMAN
OFFSITE
BASIN
78.2 Ac±
MOUNTAIN RD.
MOUNTAIN
PL.
SANDLER
ST.
PK.
MOUNTAIN
S-743
S-742
S-752
S-851
S-862
S-853
S-852
S-841
GRANITE
AVE.
MARBLE
NAKOMIS
PRAIRIE
HILL
(SPANOS
PARCEL)
11.8 Ac±
AP-3
AP-2
AP-1
ALICE
CT.
S-941
WOOD
BLVD
LOMAS BLVD
FRUIT
ROMA
S-56
S-55
S-54
S-53
S-52
S-44
OFFSITE
BASIN
ROMA
AVE

III CALCULATIONS

A. CAPACITY OF SD SYSTEM @ CHELWOOD & LOMAS:

1. PER C.O.A. STORM DRAINAGE FACILITIES MAP J-22S, AT CHELWOOD & LOMAS THERE ARE 15 D/C INLETS,

ASSUMING DEPTH OF WATER IN GUTTER OF 0.75' MAX BY PLATE 22.3 D-6 (DPM)

Q/INLET = 17.0 CFS

⇒ TOTAL Q INTERCEPTED BY INLET BANK = 15 × 17.0 = 255 CFS ±

2. CHECKING CONNECTOR PIPE, AS PER MAP J-22-S, LARGEST PIPE = 30" RCP @ S = 0.040 BY MANNING EQN:

$$Q = \frac{1.49}{n} A R^{2/3} S^{1/2}$$

$n = 0.013$
$A = 4.91$ SF
$R = 0.62$
$S = 0.040$

Q = 82 CFS

⇒ CONNECTOR PIPE LIMITS CAPACITY OF SYSTEM TO APPROX 82 CFS

B. DISCHARGE DETERMINATION

ASSUMING A DOWNSTREAM CAPACITY OF 82 CFS ± A UNIT DISCHARGE RATE PER ACRE CAN BE CALCULATED

$$\Rightarrow \frac{83 \text{ CFS}}{98 \text{ ACRES}} = 0.85 \text{ CFS/ACRE}$$

CONSIDERING BOTH PRAIRIE HILL AND QUAIL RIDGE:

PRAIRE HILL 11.84 AC (0.85) = 10.1 CFS
QUAIL RIDGE 8.0 AC (0.85) = 6.8 CFS

C. PONDING VOLUMES

BY POND ROUTING, THE REQUIRED VOLUMES FOR EACH SITE ARE DETERMINED BY SOLVING HYDROGRAPHS:

PRAIRIE HILL VOL = 42,065 CF
QUAIL RIDGE VOL = 28,570 CF

ESPEY, HUSTON & ASSOCIATES INC.
Engineering & Environmental Consultants

SUBJECT PRAIRIE HILL

HYDROGRAPHS

SHEET 1 OF 1 BY DL
DATE 8/6/84 CK BY

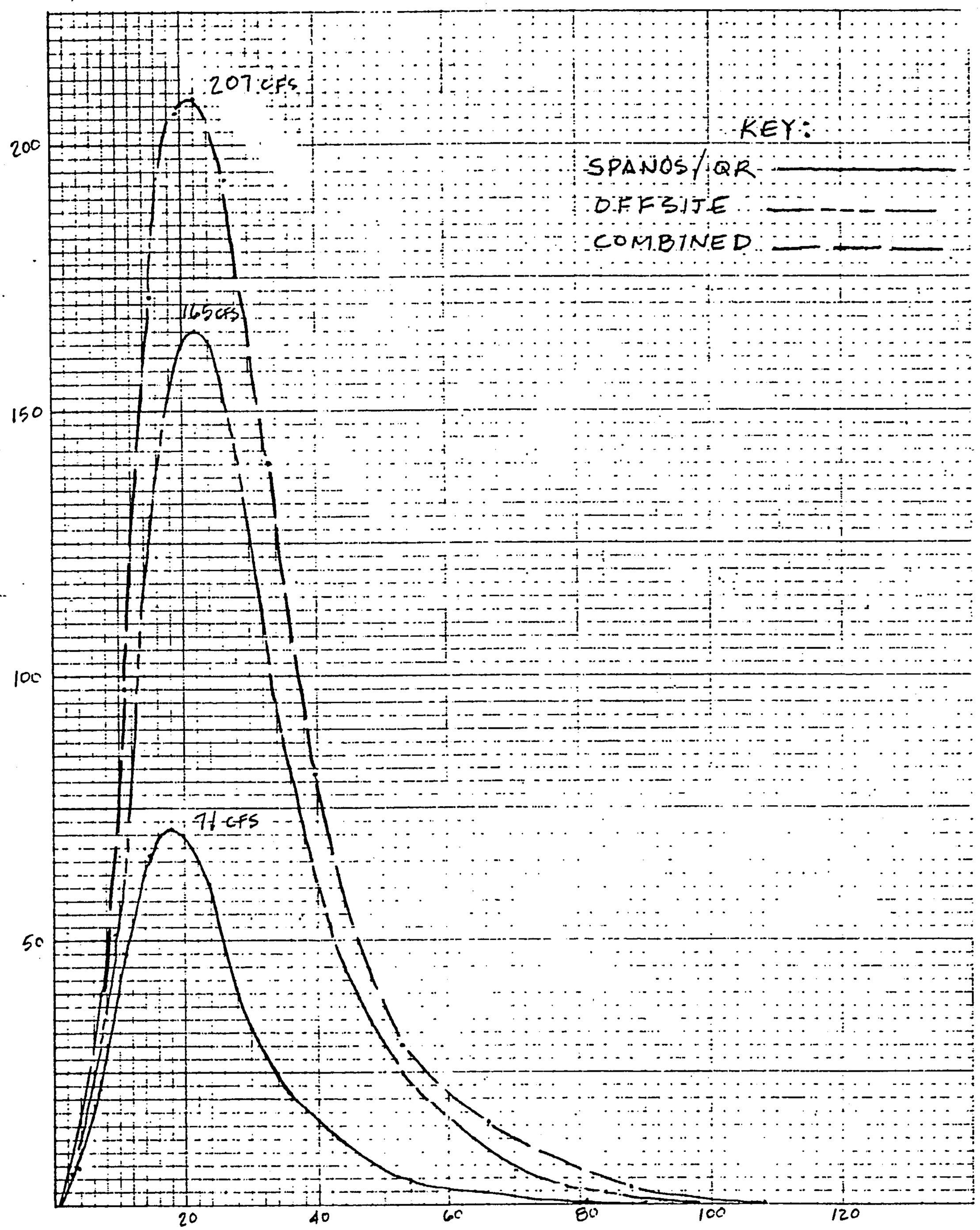

DRAINAGE CRITERIA

IN THIS ANALYSIS THE RATIONAL METHOD OF ESTIMATING RUNOFF IS USED IN ACCORDANCE WITH THE DEVELOPMENT PROCESS MANUAL, VOLUME II, CHAPTER 22. THE FOLLOWING DESIGN CONSTANTS ARE USED IN THE ANALYSIS:

1. RAINFALL; P100 = 2.51 in P10 = 1.65 in
2. SOIL; EMBUDO-TIJERAS COMPLEX - TYPE 'B' SOIL
3. 'C' FACTOR; UNDEVELOPED C = 0.34
   ON-SITE DEVELOPED C = 0.66 @ 65% IMPERVIOUS
   PLATE 22.2 C-1 DPM

I. EXISTING CONDITIONS

BASIN 'A'

LENGTH = 700 Ft.
EL. DIFF. = 39 Ft.
SLOPE = .055714 ft/ft
TIME OF CONCENTRATION = 10 Min.
RUNOFF COEFF. = .34
AREA = 6.86 Acres

P100 = 2.51 Inches.
P10 = 1.6491 Inches.

I100 = 5.3055 Inches/Hr.
I10 = 3.4857 Inches/Hr.

Q100 = 12.375 c.f.s.
Q10 = 8.1304 c.f.s.

VOL100 = 21251 c.f.
VOL10 = 13962 c.f.

BASIN 'B'

LENGTH = 610 Ft.
EL. DIFF. = 27 Ft.
SLOPE = .044262 ft/ft
TIME OF CONCENTRATION = 10 Min.
RUNOFF COEFF. = .34
AREA = 3.6 Acres

P100 = 2.51 Inches.
P10 = 1.6491 Inches.

I100 = 5.3055 Inches/Hr.
I10 = 3.4857 Inches/Hr.

Q100 = 6.4939 c.f.s.
Q10 = 4.2665 c.f.s.

VOL100 = 11152 c.f.
VOL10 = 7326.9 c.f.

BASIN 'C'

LENGTH = 480 Ft.
EL. DIFF. = 23 Ft.
SLOPE = .047917 ft/ft
TIME OF CONCENTRATION = 10 Min.
RUNOFF COEFF. = .34
AREA = 1.38 Acres

P100 = 2.51 Inches.
P10 = 1.6491 Inches.

I100 = 5.3055 Inches/Hr.
I10 = 3.4857 Inches/Hr.

Q100 = 2.4893 c.f.s.
Q10 = 1.6355 c.f.s.

VOL100 = 4275 c.f.
VOL10 = 2808.7 c.f.

II. DEVELOPED CONDITIONS

BASIN 'A1'

LENGTH = 530 Ft.
EL. DIFF. = 27 Ft.
SLOPE = .050943 ft/ft
TIME OF CONCENTRATION = 10 Min.
RUNOFF COEFF. = .66
AREA = 1.19 Acres

P100 = 2.51 Inches.
P10 = 1.6491 Inches.

I100 = 5.3055 Inches/Hr.
I10 = 3.4857 Inches/Hr.

Q100 = 4.1669 c.f.s.
Q10 = 2.7377 c.f.s.

VOL100 = 7156 c.f.
VOL10 = 4701.5 c.f.

ALLOWABLE DISCHARGE = 1 c.f.s.

POND VOLUME = 4133.5 c.f.

BASIN 'A2'

LENGTH = 250 Ft.
EL. DIFF. = 10 Ft.
SLOPE = .04 ft/ft
TIME OF CONCENTRATION = 10 Min.
RUNOFF COEFF. = .66
AREA = 1 Acres

P100 = 2.51 Inches.
P10 = 1.6491 Inches.

I100 = 5.3055 Inches/Hr.
I10 = 3.4857 Inches/Hr.

Q100 = 3.5016 c.f.s.
Q10 = 2.3006 c.f.s.

VOL100 = 6013.5 c.f.
VOL10 = 3950.9 c.f.

ALLOWABLE DISCHARGE = .85 c.f.s.

POND VOLUME = 3448.3 c.f.

BASIN 'A3'

LENGTH = 520 Ft.
EL. DIFF. = 23 Ft.
SLOPE = .044231 ft/ft
TIME OF CONCENTRATION = 10 Min.
RUNOFF COEFF. = .66
AREA = 2.94 Acres

P100 = 2.51 Inches.
P10 = 1.6491 Inches.

I100 = 5.3055 Inches/Hr.
I10 = 3.4857 Inches/Hr.

Q100 = 10.295 c.f.s.
Q10 = 6.7638 c.f.s.

VOL100 = 17680 c.f.
VOL10 = 11616 c.f.

ALLOWABLE DISCHARGE = 2.5 c.f.s.

POND VOLUME = 10136 c.f.

BASIN 'A' TOTAL

LENGTH = 530 Ft.
EL. DIFF. = 27 Ft.
SLOPE = .050943 ft/ft
TIME OF CONCENTRATION = 10 Min.
RUNOFF COEFF. = .66
AREA = 5.13 Acres

P100 = 2.51 Inches.
P10 = 1.6491 Inches.

I100 = 5.3055 Inches/Hr.
I10 = 3.4857 Inches/Hr.

Q100 = 17.963 c.f.s.
Q10 = 11.802 c.f.s.

VOL100 = 30849 c.f.
VOL10 = 20268 c.f.

ALLOWABLE DISCHARGE = 4.36 c.f.s.

POND VOLUME = 17691 c.f.

BASIN 'B1'

LENGTH = 470 Ft.
EL. DIFF. = 20 Ft.
SLOPE = .042553 ft/ft
TIME OF CONCENTRATION = 10 Min.
RUNOFF COEFF. = .66
AREA = 1.8 Acres

P100 = 2.51 Inches.
P10 = 1.6491 Inches.

I100 = 5.3055 Inches/Hr.
I10 = 3.4857 Inches/Hr.

Q100 = 6.3029 c.f.s.
Q10 = 4.141 c.f.s.

VOL100 = 10824 c.f.
VOL10 = 7111.4 c.f.

BASIN 'B2'

LENGTH = 910 Ft.
EL. DIFF. = 29 Ft.
SLOPE = .031868 ft/ft
TIME OF CONCENTRATION = 10 Min.
RUNOFF COEFF. = .66
AREA = 4.04 Acres

P100 = 2.51 Inches.
P10 = 1.6491 Inches.

I100 = 5.3055 Inches/Hr.
I10 = 3.4857 Inches/Hr.

Q100 = 14.147 c.f.s.
Q10 = 9.2946 c.f.s.

VOL100 = 24294 c.f.
VOL10 = 15961 c.f.

BASIN 'B' TOTAL

LENGTH = 910 Ft.
EL. DIFF. = 29 Ft.
SLOPE = .031868 ft/ft
TIME OF CONCENTRATION = 10 Min.
RUNOFF COEFF. = .66
AREA = 5.84 Acres
4.0
P100 = 2.51 Inches.
P10 = 1.6491 Inches.

I100 = 5.3055 Inches/Hr. 8.46 32.61 cfs
I10 = 3.4857 Inches/Hr.

Q100 = 20.45 c.f.s.
Q10 = 13.436 c.f.s.

VOL100 = 35119 c.f.
VOL10 = 23073 c.f.

ALLOWABLE DISCHARGE = 5 c.f.s.

POND VOLUME = 20045 c.f.

BASIN 'C'

LENGTH = 550 Ft.
EL. DIFF. = 19 Ft.
SLOPE = .034545 ft/ft
TIME OF CONCENTRATION = 10 Min.
RUNOFF COEFF. = .66
AREA = .8 Acres

P100 = 2.51 Inches.
P10 = 1.6491 Inches.

I100 = 5.3055 Inches/Hr.
I10 = 3.4857 Inches/Hr.

Q100 = 2.8013 c.f.s.
Q10 = 1.8405 c.f.s.

VOL100 = 4810.8 c.f.
VOL10 = 3160.7 c.f.

ALLOWABLE DISCHARGE = .7 c.f.s.

POND VOLUME = 2706.9 c.f.

III. POND DESIGN

BASIN 'A' TOTAL - PONDS A1,A2,A3,A4

REQUIRED POND VOLUME = 17691 CF
DESIGN POND WITH 18 INCH MAXIMUM WATER DEPTH
AVAILABLE VOLUME (POND A1,A2,A3) = 9997 CF
USE ROCK BOTTOM 18 INCHES THICK WITH n=0.40
ROCK VOLUME = 8222 CF
STORAGE IN ROCK LAYER = 3290 CF
TOTAL PONDED VOLUME PROVIDED (PONDS A1,A2,A3) = 13286 CF

PONDED VOLUME POND A4 = 4500 CF

TOTAL PONDED VOLUME BASIN 'A' = 17785 CF

BASIN 'B' TOTAL - POND B

REQUIRED POND VOLUME = 20045 CF
DESIGN POND WITH 18 INCH MAXIMUM WATER DEPTH
AVAILABLE VOLUME = 12140 CF
USE ROCK BOTTOM 18 INCHES THICK WITH n=0.40
ROCK VOLUME = 12200 CF
STORAGE IN ROCK LAYER = 4880 CF
ADD PONDED VOLUME IN PARKING LOT = 3365 CF
TOTAL PONDED VOLUME PROVIDED = 20385 CF

BASIN 'C' - POND C

REQUIRED POND VOLUME = 2707 CF
DESIGN POND WITH 18 INCH MAXIMUM WATER DEPTH
AVAILABLE VOLUME = 2650 CF
USE ROCK BOTTOM 18 INCHES THICK WITH n=0.40
ROCK VOLUME = 2250 CF
STORAGE IN ROCK LAYER = 900 CF
TOTAL PONDED VOLUME PROVIDED = 3550 CF

IV. POND OUTFALL DESIGN

POND A1

ALLOWABLE DISCHARGE = 1.0 CFS
BY ORIFACE EQN: Q(4" PIPE) = 0.95 CFS OK

PROVIDE RIP RAP OVERFLOW SWALE TO POND A2

POND A2

ALLOWABLE DISCHARGE = 0.85 CFS
BY ORIFACE EQN: Q(4" PIPE) = 0.95 CFS OK

PROVIDE RIP RAP OVERFLOW SWALE TO POND A3

POND A3

ALLOWABLE DISCHARGE = ALLOWABLE DISCHARGE FROM BASIN 'A' = 4.36 (
BY ORIFACE EQN: Q(6" PIPE) = 1.7 CFS
USE 3-6 INCH PIPES. Q = 5.1 CFS OK

PROVIDE CONCRETE SPILLWAY

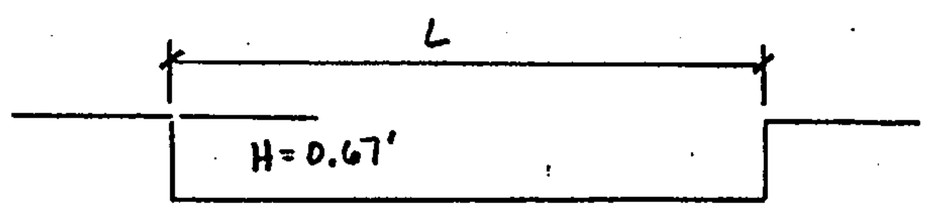

BY WEIR EQN: WHERE H = 0.67 FT
Q = 18.0 CFS
THEN L = 10 FT

POND A4

PROVIDE DRAINLINE TO GIVE 24 HOUR DRAIN TIME
CHECK 4 INCH PIPE:
BY ORIFACE EQN: Q(4" PIPE) = 0.7 CFS
DRAIN TIME = 4500 CF/(0.7 CFS*3600) = 2 HRS

POND B

ALLOWABLE DISCHARGE = 5.0 CFS
BY ORIFACE EQN: Q(6" PIPE) = 1.7 CFS
USE 3-6 INCH PIPES Q = 5.1 CFS OK

PROVIDE CONCRETE SPILLWAY

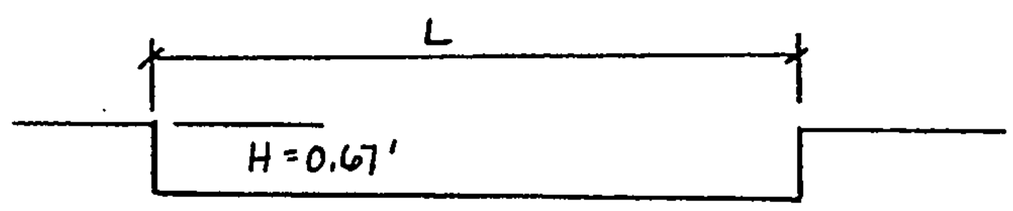

BY WEIR EQN: WHERE H = 0.67 FT
Q = 20.5 CFS
THEN L = 12 FT

POND C

ALLOWABLE DISCHARGE = 0.7 CFS
BY ORIFACE EQN: Q(4" PIPE) = 0.95 CFS OK

PROVIDE CONCRETE SPILLWAY

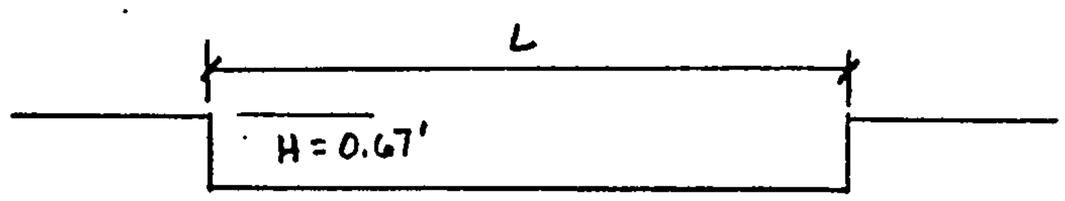

BY WEIR EQN: WHERE H = 0.67 FT
Q = 2.8 CFS
THEN L = 5 FT

V. QUAIL RIDGE SUBDIVISION

BASIN I

LENGTH = 545 Ft.
EL. DIFF. = 16 Ft.
SLOPE = .029358 ft/ft
TIME OF CONCENTRATION = 10 Min.
RUNOFF COEFF. = .66
AREA = 1.6 Acres

P100 = 2.51 Inches.
P10 = 1.6491 Inches.

I100 = 5.3055 Inches/Hr.
I10 = 3.4857 Inches/Hr.

Q100 = 5.6026 c.f.s.
Q10 = 3.6809 c.f.s.

VOL100 = 9621.5 c.f.
VOL10 = 6321.3 c.f.

ADD Q100 = 20.5 CFS FROM PRAIRIE HILLS POND 'B'
Q(TOTAL) = 20.5 + 5.6 = 26.1 CFS

BASIN II

LENGTH = 585 Ft.
EL. DIFF. = 26 Ft.
SLOPE = .044444 ft/ft
TIME OF CONCENTRATION = 10 Min.
RUNOFF COEFF. = .66
AREA = 2.7 Acres

P100 = 2.51 Inches.
P10 = 1.6491 Inches.

I100 = 5.3055 Inches/Hr.
I10 = 3.4857 Inches/Hr.

Q100 = 9.4544 c.f.s.
Q10 = 6.2115 c.f.s.

VOL100 = 16236 c.f.
VOL10 = 10667 c.f.

ADD Q100 = 18.0 CFS FROM PRAIRIE HILLS POND 'A3'
Q(TOTAL) = 18.0 + 9.5 = 27.5 CFS

BASIN III

LENGTH = 585 Ft.
EL. DIFF. = 29 Ft.
SLOPE = .049573 ft/ft
TIME OF CONCENTRATION = 10 Min.
RUNOFF COEFF. = .66
AREA = 3.7 Acres

P100 = 2.51 Inches.
P10 = 1.6491 Inches.

I100 = 5.3055 Inches/Hr.
I10 = 3.4857 Inches/Hr.

Q100 = 12.956 c.f.s.
Q10 = 8.5121 c.f.s.

VOL100 = 22250 c.f.
VOL10 = 14618 c.f.

ADD Q100 = 2.8 CFS FROM PRAIRIE HILLS POND 'C'
ADD Q100 = 26.1 CFS FROM BASIN I
Q(TOTAL) = 2.8 + 26.1 + 13.0 = 41.9 CFS

VI. TOTAL DEVELOPED RUNOFF FOR PRAIRIE HILLS APTS. AND QUAIL RIDGE SUBDIVISION @ NAKOMIS DR.

LENGTH = 1495 Ft.
EL. DIFF. = 58 Ft.
SLOPE = .038796 ft/ft
TIME OF CONCENTRATION = 10 Min.
RUNOFF COEFF. = .66
AREA = 19.84 Acres

P100 = 2.51 Inches.
P10 = 1.6491 Inches.

I100 = 5.3055 Inches/Hr.
I10 = 3.4857 Inches/Hr.

Q100 = 69.472 c.f.s.
Q10 = 45.643 c.f.s.

VOL100 = 119310 c.f.
VOL10 = 78387 c.f.

VII. QUAIL RIDGE CHANNEL CAPACITY DETERMINATION

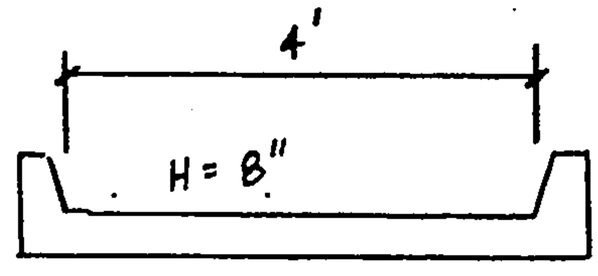

SECTON REACHES A, B, C

A. REACH 1 @ S = 2.0 %

RECTANGULAR SECTION

BOTTOM WIDTH = 4 FT
DEPTH = .67 FT
AREA = 2.68 SF
HYDRAULIC RADIUS = .50187 FT
SLOPE = .02 FT/FT
n = .013
Q = 27.434 CFS
VELOCITY = 10.237 FPS

SOLVING FOR DEPTH @ Q = 26.1 CFS
d = 0.6'
V = 10.9 FPS

B. REACH 2 @ S = 6.1 %

RECTANGULAR SECTION

BOTTOM WIDTH = 4 FT
DEPTH = .67 FT
AREA = 2.68 SF
HYDRAULIC RADIUS = .50187 FT
SLOPE = .061 FT/FT
n = .013
Q = 47.911 CFS
VELOCITY = 17.877 FPS

SOLVING FOR DEPTH @ Q = 26.1 CFS
d = 0.45'
V = 14.5 FPS

C. REACH 3 @ S = 5.2 %

RECTANGULAR SECTION

BOTTOM WIDTH = 4 FT
DEPTH = .67 FT
AREA = 2.68 SF
HYDRAULIC RADIUS = .50187 FT
SLOPE = .052 FT/FT
n = .013
Q = 44.236 CFS
VELOCITY = 16.506 FPS

SOLVING FOR DEPTH @ Q = 26.1 CFS
d = 0.5'
V = 13.0 FPS

D. REACH 4 @ S = 7.0 %

RECTANGULAR SECTION

BOTTOM WIDTH = 3.2 FT
DEPTH = 2 FT
AREA = 6.4 SF
HYDRAULIC RADIUS = .88889 FT
SLOPE = .07 FT/FT
n = .013
Q = 179.42 CFS
VELOCITY = 28.034 FPS

SOLVING FOR DEPTH @ Q = 26.1 CFS
d = 0.5'
V = 16.3 FPS

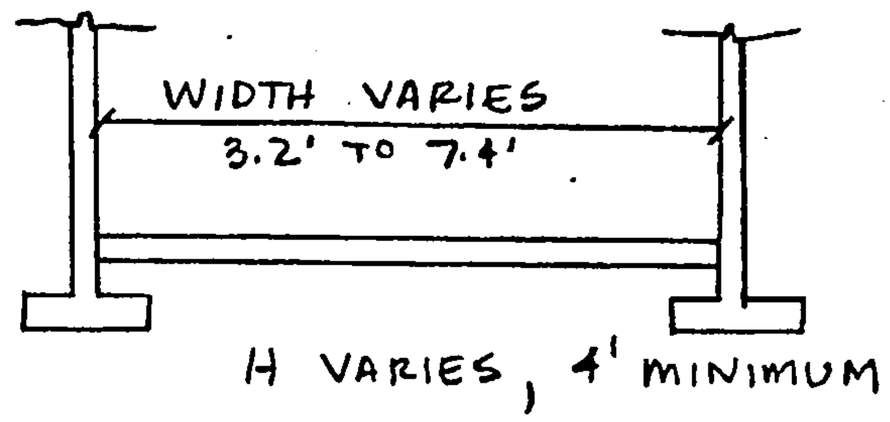

SECTION REACHES D, E

E. REACH 5 @ S = 1.3 %

RECTANGULAR SECTION

BOTTOM WIDTH = 7.4 FT
DEPTH = 2 FT
AREA = 14.8 SF
HYDRAULIC RADIUS = 1.2982 FT
SLOPE = .013 FT/FT
n = .013
Q = 230.16 CFS
VELOCITY = 15.551 FPS

SOLVING FOR DEPTH @ Q = 26.1 CFS
d = 0.4'
V = 8.8 FPS

ALL REACHES EXCEED Q100

ESPEY, HUSTON & ASSOCIATES, INC.

RECEIVED
MAR 28 1986
HYDROLOGY SECTION

PRAIRIE HILLS APARTMENTS
ADDENDUM NO. 1
3/24/86

The following analysis is an addendum to the approved drainage report for Prairie Hills Apartments. The approved report outlined the drainage criteria for controlling stormwater from the Prairie Hills Apartments site. The results of the approved downstream analysis indicated that detention ponding would be required, and the site discharge rate was established at 0.85 cfs/acre. The approved report established a total controlled discharge from the developed site of 11.2 cfs, with a total ponding requirement of 40,443 CF.

The as-built condition, as shown by the Engineer's Certification of Drainage Compliance, provides 33,088 CF of detention ponding. This volume represents a 7354 CF difficiency in the ponding requirement. As-built measurements of the on-site ponds reveal that ponds "A-1, A-2, A-3, A-4" and "C" all meet or exceed the design volumes. Pond "B" represents the substandard ponding system.

Prior to taking drastic measures (such as completely rebuilding pond "B" at great cost to the developer), the following analysis was performed to check what effect this substandard ponding system has downstream. The following hydrographs represent predevelopment conditions, design conditions, and as-built conditions. Utilizing these hydrographs, street depths were plotted at Analysis Point No. 1 (Chelwood @ Lomas) to check the increase in street depth due to as-built conditions.

CONCLUSIONS

The following conclusions can be made from the analysis:

1. As-built Q peak is approximately 2 cfs lower than the predeveloped Q peak.

2. As-built street depths are approximately equal to pre-developed street depths, and only a negligible amount higher than design street depths.

3. The as-built condition should be approved since no additional impact is felt downstream as a result of this development.

ESPEY, HUSTON & ASSOCIATES INC.
Engineering & Environmental Consultants

SUBJECT HYDR. CALCS

PRAIRIE HILL APTS.

SHEET 1 OF ____ BY DL.
DATE 3-24-86 CK BY ____

CALCULATIONS

1. PRAIRIE HILL SITE

DESIGN DISCHARGE PER APPROVED REPORT

Q_{100} = 41.4 CFS
Q_{10} = 27.2 CFS
Q RELEASE = 11.2 CFS.

2. PRAIRIE HILL SITE

AS-BUILT DISCHARGE PER ENGR'S CERT

Q POND "A-3" = 5.1 CFS
Q POND "C" = 0.95 CFS
Q POND "B" = 20.5 CFS } = Q_{100} OVER SPILLWAY
Q TOTAL = 26.6 CFS

3. OFFSITE BASIN ANALYZED @ AP#1 (CHERWOOD - LOMAS)

t_c = 22 min i_{100} = 3.64"/hr. P_{100} = 2.55" C = 0.58
A = 86.2 AC

Q_{100} = 182 CFS
Q_{10} = 119 CFS

ALL AS PER APPROVED REPORT

ESPEY, HUSTON & ASSOCIATES INC.
Engineering & Environmental Consultants

SUBJECT CALCS.

P. HILL APTS

SHEET 2 OF ____ BY DL
DATE 3-24-86 CK BY ____

4. TOTAL BASIN WITH UNDEVELOPED PRAIRIE HILL SITE @ AP #1

t_c = 22 min i_{100} = 3.64 P_{100} = 2.55

C = 0.58 A = 98 ac

Q_{100} = 207 CFS

Q_{10} = 136 CFS

ALL AS PER APPROVED REPORT

85 23652

RECEIVED
APR 1 2 1985
ESPEY, HUSTON & ASSOC.

524

GRANT OF EASEMENT
FOR
DRAINAGE EASEMENT

J22-D36

APR 16 REC'D

THIS INDENTURE made and executed this 11 day of March, 1985 by and between Quail Ridge Homeowners Association in the County of Bernalillo and State of New Mexico hereinafter called the Grantors and THE CITY OF ALBUQUERQUE, NEW MEXICO, a municipal corporation, hereinafter called the Grantee.

WITNESSETH, that for valuable considerations the receipt of which is hereby acknowledged the Grantors have this day bargained and sold and by these presents do sell, convey and deliver unto the City of Albuquerque a permanent easement as right-of-way including the permanent right to enter upon the real estate hereinafter described at any time that it may see fit and construct, maintain and repair drainage facilities across, through, and under the lands hereinafter described and the further right to remove trees, bushes, undergrowth and obstructions interfering with the location, construction and maintenance of said facilities.

The land affected by the grant of this easement and right-of-way is located in the County of Bernalillo and State of New Mexico and is more particularly described as follows:

RECEIVED
APR 1 8 1985
HYDROLOGY SECTION

SEE ATTACHED EXHIBIT "A"

TO HAVE AND TO HOLD the said right and easement for the uses and purposes aforesaid, unto Grantee its successors and assigns for so long as said easement shall not be abandoned for use as a right-of-way for aforesaid drainage facilities.

The Grantors do hereby covenant with Grantee that they are lawfully seized and possessed of the real estate above described and that they have a good and lawful right to convey it or any part thereof, that it is free from all encumbrances except taxes due and owing the Treasurer of Bernalillo County and that they will forever warrant and defend the title thereto against the lawful claims of all persons whomsoever.

As a part of the consideration for this grant, the Grantors do hereby release any and all claims for damages for whatsoever cause incidental to the exercise of the rights herein granted provided, however, that the Grantee agrees to save Grantors harmless from any and all liability that may arise as a result of the construction and use of the easement for the purposes set forth.

IN WITNESS WHEREOF, the parties have set their hands and seals this 11 day of March, 1985.

Lloyd G. Wayne
Lloyd Wayne, President

Quail Ridge Homeowners Association

STATE OF NEW MEXICO)
ss.
COUNTY OF BERNALILLO)

The foregoing instrument was acknowledged before me this 11th day of March, 1985 by Lloyd Wayne.

Carol Ery

My commission expires:

11/21/87

EXHIBIT 'A'

U 526

DRAINAGE EASEMENT

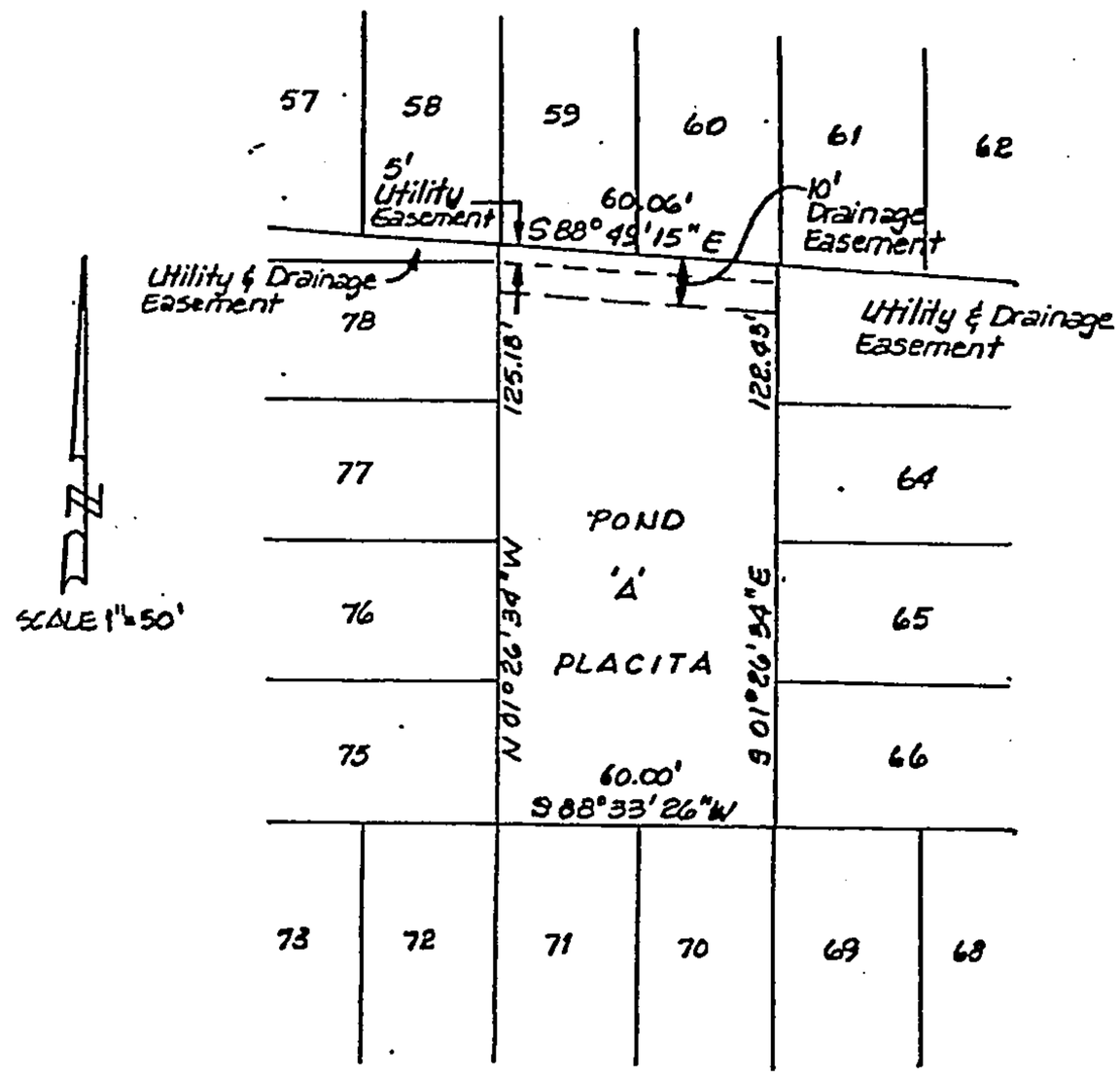

The Northerly Ten (10) feet of POND 'A' of QUAIL RIDGE SUBDIVISION in the City of Albuquerque, as the same is shown and designated on said plat filed in the office of the County Clerk of Bernalillo County, New Mexico, on September 18, 1979 (D9-180).

STATE OF NEW MEXICO
COUNTY OF BERNALILLO
FILED FOR RECORD

'85 MAR 28 P2 :46

524-526

DOLORES C. KALLER
CO CLERK & RECORDER

DEPUTY

#2397
pg 2 of 5

#2397
pg 1 of 5

Developer

ESTIMATE SHEET
PROJECT NO. 2397
MAP NO. J-22

Check appropriate box and date.

☒ Quantities and Cost Estimate
Date Prepared: 02/06/85

☒ Approval
Date Requested: 02/27/85

☐ Work Order
Date Issued: _____

☐ Final Acceptance
Date Accepted: _____

APPLICANT INFORMATION:

Developer: Quail Ridge Homeowners Association

Mailing Address: 1039 Omaha N.E., Albuq., N.M. 87112

Consulting Engineer: Espey, Huston and Associates, Inc.
Mailing Address: 4801 Indian School Road N.E., Suite 204
Albuquerque, New Mexico 87110

Person to contact regarding this form: Dennis A. Lorenz

Mailing Address: See consultant's address.

Phone: (505) 255-1625

GENERAL SCOPE OF PROJECT:

DRAINAGE IMPROVEMENTS WITHIN QUAIL RIDGE SUBDIVISION

NAME OF SUBDIVISION OR DESCRIPTION OF PROPERTY TO BE SERVED:

QUAIL RIDGE SUBDIVISION

Developer to Pay = 100% Policy _____
(Methods II & III)

City to Pay = 0% Policy _____

City to Pay = 0% Policy _____

SPECIFIC LOCATION:

Quail Ridge Subdivision

W	SAS	SD	P	M
		X		

RECEIVED
APR 18 1985
HYDROLOGY SECTION

Project No. _____

#239
P94

FOR ESTIMATE

RECOMMENDED: CONCURRENCE:

Gregory R Olea 3/20/85 N/A
Assistant City Engineer Date Requesting Office Date

APPROVED:

C. W. Shepard 3/21/85
City Engineer Date

OFFICE OF THE CITY TREASURER
RECEIPT OF ESCROW FUNDS

Reciept from the above applicant of the sum of $_____, is hereby acknowledged to be held in escrow until the completion of work described above.

Debit City Account _____ Credit 233200-7000820 $_____

Journal Voucher No. _____ Date _____
Accountant Treasurer

FOR CONSTRUCTION

Construction Documentation Completed.
Outside funds have been receieved by CIP.

Denise Wilson 4/11/85
MDD/Engineering Date

Funds are available _____

APPROVED:

C. W. Shepard 4/16/85
City Engineer Date

APPROVED:

Susan J. Pena 4/12/85
CIP/Fiscal Supervisor FB Date

WORK ORDER RECEIVED:

_____
Contractor Date

PROPOSED STARTING DATE:

_____

FOR ACCEPTANCE

RECOMMENDED:

_____
Assistance City Engineer Date

APPROVED:

_____
City Engineer Date

ACCEPTANCE COMPLETED:

_____
Date

#2397 pg 5 of 5

DESIGN DEPOSIT FEE

DATE: 2-6-85

CITY ENGINEER
MUNICIPAL DEVELOPMENT DEPARTMENT
ALBUQUERQUE, NEW MEXICO

PROJECT NO: 2397

TOTAL FEE $ 85.20

____ BLOCK-TO-BLOCK X AHBA

DEPOSIT SCHEDULE

CONSTRUCTION PHASE	UNIT PRICE	X	QUANTITY		=	DEPOSIT FEE
SANITARY SEWER	*$ .60	X		LF	=	
	** .35	X		LF	=	
WATER	*$ .50	X		LF	=	
	** .30	X		LF	=	
WATER (FIRE HYDRANT ONLY)	*$72.00	X		EA	=	
	** 43.00	X		EA	=	
PAVING (RESIDENTIAL)	*$ 1.75	X		LF	=	
	** 1.05	X		LF	=	
PAVING (1/2 ARTERIAL)	*$ 2.05	X		LF	=	
	** 1.25	X		LF	=	
STORM DRAINAGE (PIPE)	*$ 1.40	X		LF	=	
	** .85	X		LF	=	
STORM DRAINAGE (CHANNEL)	*$ 3.70	X		LF	=	85.20 *
	** 2.20	X		LF	=	
			TOTAL		=	$ 85.20

* Based on 10% engineering fee
** Based on 6% engineering fee

* BASED ON 2% OF ENGINEER'S ESTIMATE

DEPOSITOR

Name ESPEY, HUSTON & ASSOC

Address 4801 INDIAN SCHOOL
ALB, NM 87110

Telephone 255-1625

Signed Don G. [illegible]

RECEIPT OF THE ABOVE DEPOSIT IS HEREBY ACKNOWLEDGED:

Robert E. Landon, City Treasurer
City of Albuquerque

(Signed) (Date)

CREDIT TO:

441004 - 5252000

This deposit fee shall be held by the City Treasurer for a period of one year after the date of the approved estimate. During this period the deposit fee may be applied to the required total Engineering Fee prior to release of the Work Order. Deposit fee not utilized within the above period of one year will be transferred to the City Treasury, and no refunds will be made.

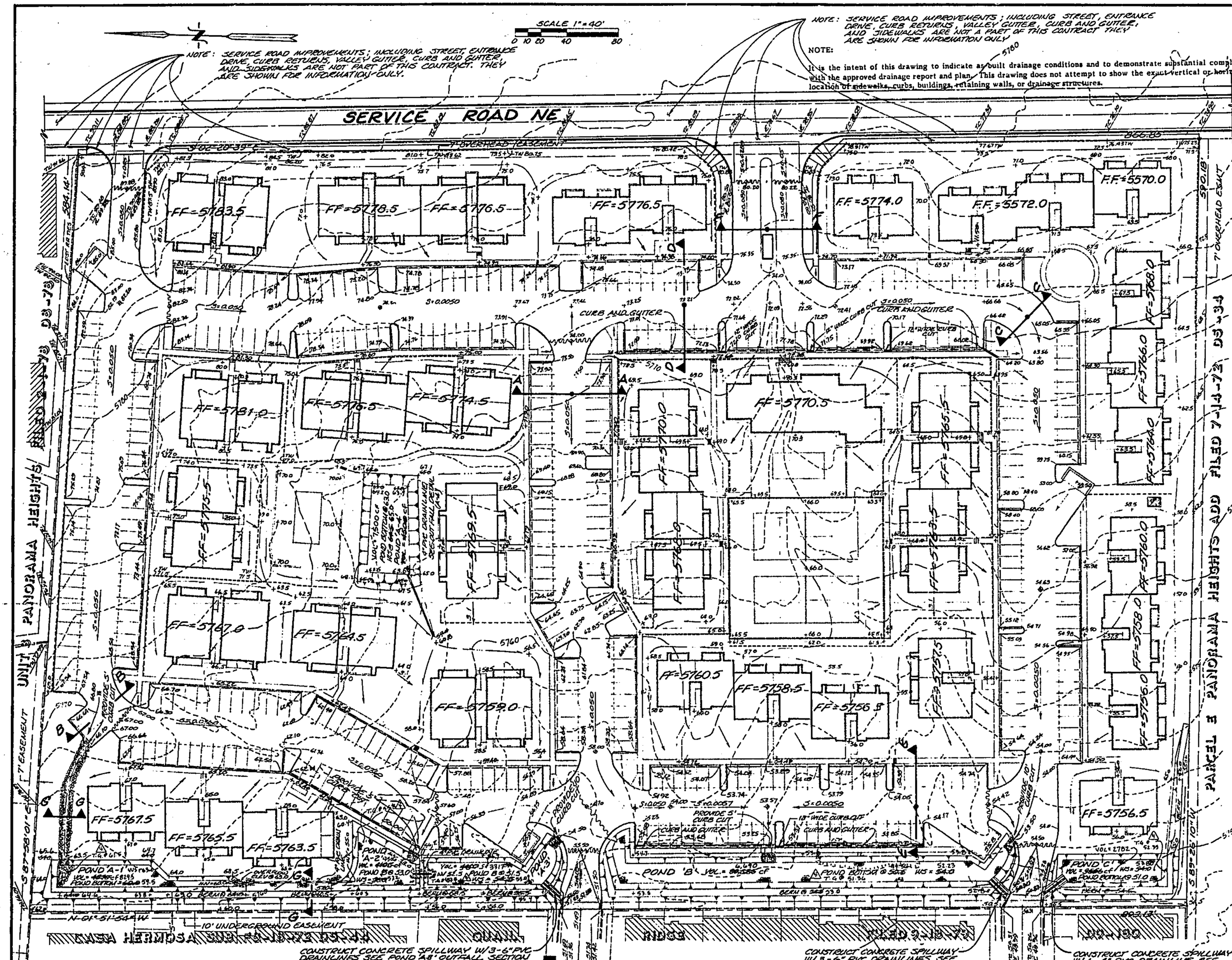

TYPICAL CURB & GUTTER TRANSITION @ SPILLWAY

NO SCALE

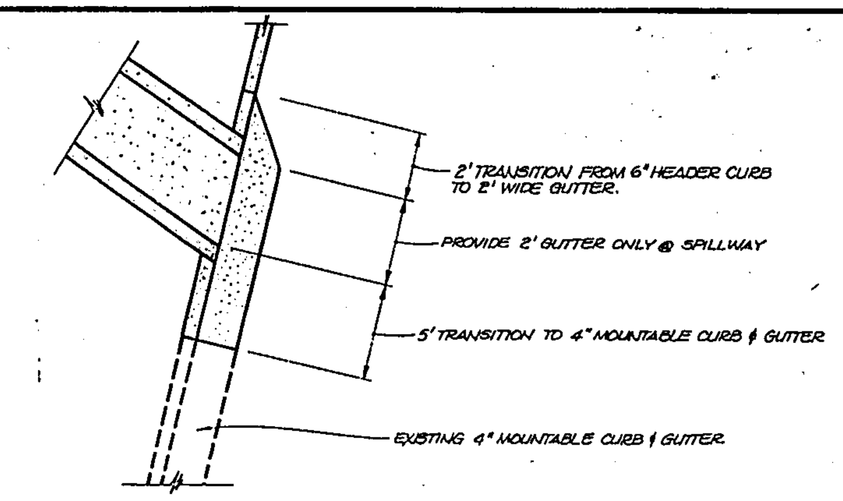

POND 'C' OUTFALL SECTION L-L

NO SCALE

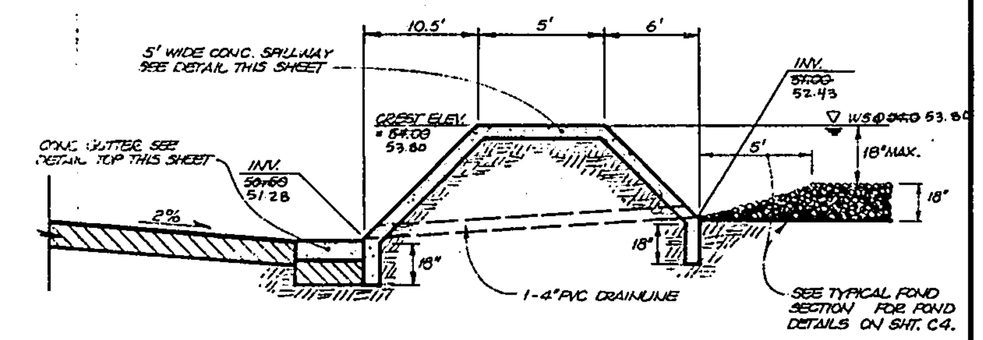

POND 'B' OUTFALL SECTION K-K

NO SCALE

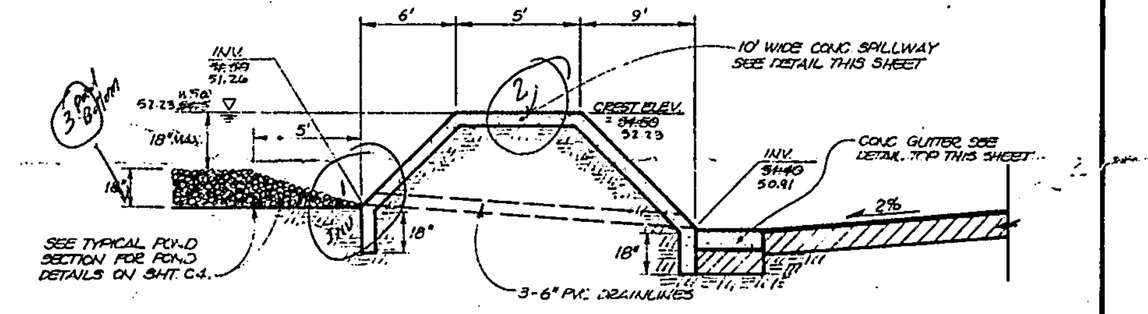

POND 'A3' OUTFALL SECTION J-J

NO SCALE

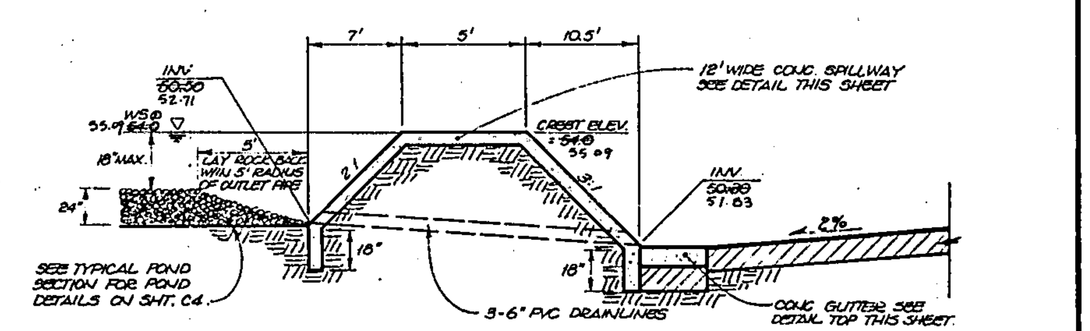

RECEIVED APR 02 1986 HYDROLOGY SECTION

VICINITY MAP

J-22

SCALE 1"=800'

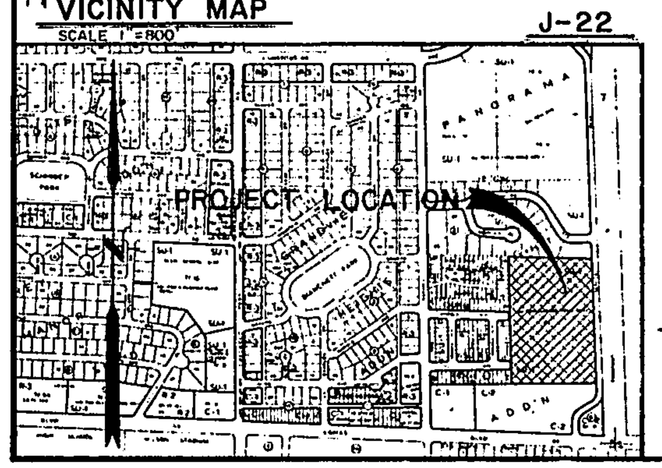

PROJECT BENCH MARK

ACS BENCH MARK 5-J23 LOCATED AT THE INTERSECTION OF TRAMWAY BLVD. AND COMAS BLVD. NE IN THE NORTH MEDIAN NOSE. THE STATION MARK IS A STANDARD ACS BRASS TABLET STAMPED BM-23 1982. 1FT. OUT. 1FT. BELOW THE GROUND WITHIN AN 11 INCH DIAMETER STEEL MONUMENT BOX.
ELEVATION = 5769.26 FEET (MSL.D)

LEGAL DESCRIPTION

PARCEL 'E' PANORAMA HEIGHTS SUBDIVISION FILED T-14-72 D3-34

ADDRESS

1001 SERVICE ROAD NE

LEGEND

- EXISTING CONTOUR
- EXISTING BLOCK WALL
- EXISTING BUILDING
- CONCRETE
- SWALE
- DIRECTION OF FLOW
- HIGH POINT ELEVATION
- SPOT ELEVATION
- FLOWLINE ELEVATION
- GRADE BREAK
- TOP OF WALL ELEVATION
- RETAINING WALL
- WHEEL CHAIR RAMP

12" SIDEWALK CULVERT

EXTRUDED CONCRETE CURB

TYPICAL SPILLWAY SECTION

NO SCALE

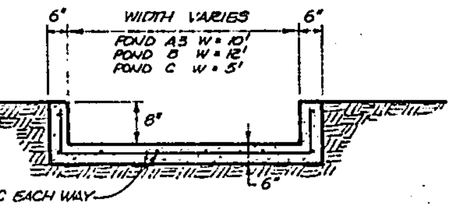

ENGINEER'S CERTIFICATION

I, the undersigned, being a professional engineer registered in the State of New Mexico, do hereby certify that this drawing for Prairie Hills Apartments was prepared by me or under my supervision and that the as-built information shown is based on actual field inspections performed by Espey, Huston & Associates, Inc. I further certify that the as-built conditions are in substantial compliance with the approved Drainage Report and plan excepting the detention ponds for which the as-built conditions are outlined in Addendum No. 1 to the approved Drainage Report for Prairie Hills Apartments.

James L. Leymon, Jr., N.M.P.E. No. 8105 — Date 3/25/86 — 4-2-86 DL

NO.	REVISIONS	BY	DATE
4	ADDED POND BOTTOM & TOP GRAVEL ELEVATIONS	DL	4-2-86
3	ADDED POND A3-BUILTS	DL	3-24-86
2	A3-BUILTS	DL	1-30-86
1	REVISED GRADES	DL	2-28-85

PRAIRIE HILLS APARTMENTS
GRADING DRAINAGE & PAVING PLAN

ESPEY, HUSTON & ASSOC., INC.
Engineering & Environmental Consultants
4801 INDIAN SCHOOL ROAD NE SUITE 204
ALBUQUERQUE, NEW MEXICO 87110
PHONE (505) 255-1625

DESIGNED BY DAL DATE JAN. 1985
DRAWN BY TKW/RD FB
CHECKED BY DAL JOB NO. 5831-C1
APPROVED BY J.L

SHEET NO C2 OF SHEETS