CITY OF ALBUQUERQUE

Planning Department
Alan Varela, Director

Mayor Timothy M. Keller

November 18, 2024

Tim Shoemaker, P.E.
RTM Engineering
7007 Wyoming Blvd. NE, Ste. F-2
Albuquerque, NM 87109

RE: Panda Express - 98th Street SW
Permanent Certificate of Occupancy - Accepted
Engineer's Certification Date: 11/15/2024
Engineer's Stamp Date: 04/29/2022
Hydrology File: K09D038

Dear Mr. Shoemaker:

PO Box 1293

Based on the Engineer's Grading and Drainage Certification received 11/15/2024 and the site visit on 11/15/2024, this letter serves as a "green tag" from Hydrology Section for a Permanent Certificate of Occupancy to be issued by the Building and Safety Division.

Albuquerque

If you have any questions, please contact me at 505-924-3314 or amontoya@cabq.gov.

NM 87103

Sincerely,

Anthony Montoya, Jr., P.E.
Senior Engineer, Hydrology
Planning Department, Development Review Services

www.cabq.gov

City of Albuquerque

Planning Department
Development & Building Services Division

DRAINAGE AND TRANSPORTATION INFORMATION SHEET (DTIS)

Project Title: Panda Express Hydrology File # K09D-38
Legal Description: Tract 2, 98ths Street Plaza, within S21, T10N, R2E NMPM
City Address, UPC, OR Parcel: 261 98th Street NW

Applicant/Agent: RTM Engineering Contact: Tim Shoemaker
Address: 7007 Wyoming Blvd NE Ste. F-2, Albuquerque, NM 87109 Phone: 913-322-1400
Email: Tim.Shoemaker@RTMEC.com

Applicant/Owner: Panda Restaurant Group, Inc. Contact: Alex Phelps
Address: 1683 Walnut Grove Ave, Rosemead, CA 91770 Phone: 303.335.5701
Email: Alex.Phelps@PandaRG.com

TYPE OF DEVELOPMENT: ☐ Plat (# of lots) _____ ☐ Single Family Home
☑ All other Developments

RE-SUBMITTAL: ☐ YES ☐ NO

DEPARTMENT: ☐ TRANSPORTATION ☑ HYDROLOGY/DRAINAGE

Check all that apply under Both the Type of Submittal and the Type of Approval Sought:

TYPE OF SUBMITTAL:

- ☑ Engineering / Architect Certification
- ☐ Conceptual Grading & Drainage Plan
- ☐ Grading & Drainage Plan, and/or Drainage Report
- ☐ Drainage Report (Work Order)
- ☐ Drainage Master Plan
- ☐ Conditional Letter of Map Revision (CLOMR)
- ☐ Letter of Map Revision (LOMR)
- ☐ Floodplain Development Permit
- ☐ Traffic Circulation Layout (TCL) – Administrative
- ☐ Traffic Circulation Layout (TCL) – DFT Approval
- ☐ Traffic Impact Study (TIS)
- ☐ Street Light Layout
- ☐ OTHER (SPECIFY)_____

TYPE OF APPROVAL SOUGHT:

- ☐ Pad Certification
- ☐ Building Permit
- ☐ Grading Permit
- ☐ Paving Permit
- ☐ SO-19 Permit
- ☐ Foundation Permit
- ☑ Certificate of Occupancy - ☑ Temp ☐ Perm
- ☐ Preliminary / Final Plat
- ☐ Site Plan for Building Permit - DFT
- ☐ Work Order (DRC)
- ☐ Release of Financial Guarantee (ROFG)
- ☐ CLOMR / LOMR
- ☐ Conceptual TCL - DFT
- ☐ OTHER (SPECIFY) _____

DATE SUBMITTED: 11/15/24

REV. 04/03/24

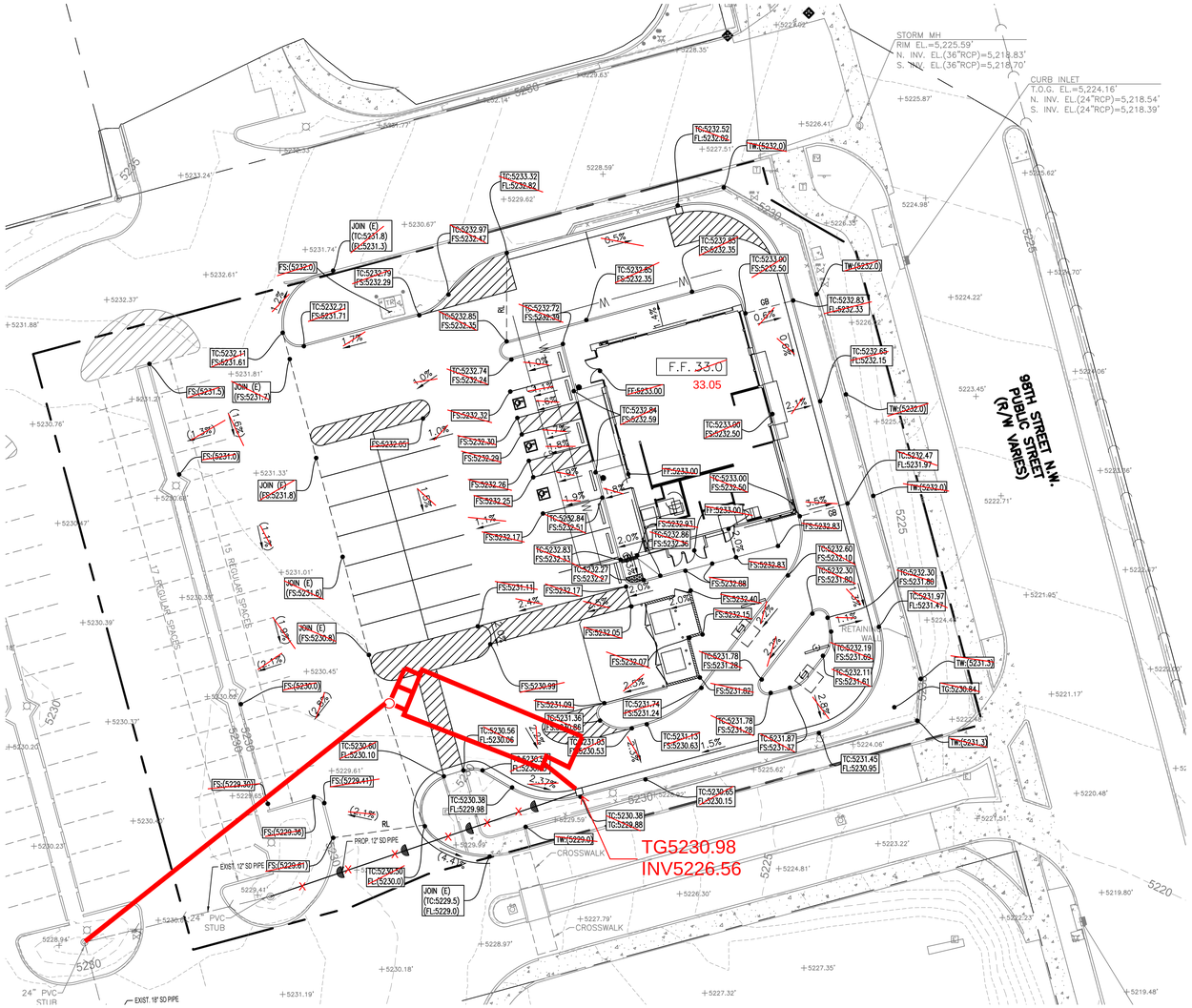

GRADING AND DRAINAGE PLAN

SCALE: 1" = 20'

LEGAL DESCRIPTION

TRACT NUMBER TWO (2) OF 98TH STREET PLAZA, AS THE SAME ARE SHOWN AND DESIGNATED IN THE CORRECTED PLAT THEREOF FILED IN THE OFFICE OF THE COUNTY CLERK OF BERNALILLO COUNT, NEW MEXICO ON AUGUST 18, 2015 IN PLAT BOOK 2015C, FOLIO 97.

TRACT OF LAND HERIN DESCRIBED HAVING 0.9726 ACRES (42,368.27 SQUARE FEET)

IDO ZONE DISTRICT: MX-M (MIXED USES-MODERATE INTENSITY ZONE DISTRICT)

BASIS OF BEARING AND BENCHMARK

NAD 83 NEW MEXICO CENTRAL ZONE STATE PLANE COORDINATE VALUES ESTABLISHED FOR:

1. NMSHC SURVEY CONTROL STATION "I-40-23" DATA:
   STANDARD BRASS DISC SET FLUSH TO THE GROUND
   NAD 83 NEW MEXICO CENTRAL ZONE STATE PLANE COORDINATES
   NORTHING: 1,485,519.844 US FEET EASTING: 1,489,913.599 US FEET
   ELEV. = 5,341.357 US FEET
   COMBINED GROUND TO GRID FACTOR = 0.999674412
   DELTA ALPHA = (-) 0°17'20.90"
2. NMSHC SURVEY CONTROL STATION "8-K9-1989" DATA:
   STANDARD 1-3/4" ALUMINUM DISC RIVETED TO A PIPE
   NAD 83 NEW MEXICO CENTRAL ZONE STATE PLANE COORDINATES
   NORTHING: 1,484,994.639 US FEET EASTING: 1,492,463.769 US FEET
   ELEV. = 5,250.166 US FEET
   COMBINED GROUND TO GRID FACTOR = 0.999677891
   DELTA ALPHA = (-) 0°17'03.21"

THE BASIS OF BEARINGS FOR THE PREMISES SURVEYED ARE NAD 83 NEW MEXICO CENTRAL ZONE GRID BEARINGS BEING BASED ON A LINE BETWEEN THE FOUND PROPERTY CORNERS LISTED ABOVE BEARING = N78°21'46"E.

PROJECT BENCHMARK 13-K9 IS A CITY OF ALBUQUERQUE SURVEY CONTROL STATION "ACS BM 13-K9" ELEVATION = 5,234.53 FEET

BASIS OF ELEVATIONS

NAVD 88

FLOODPLAIN STATEMENT

AREA LIES WITHIN FLOOD ZONE X (OTHER AREAS) . AREAS DETERMINED TO BE OUTSIDE THE 0.2% ANNUAL CHANCE OF FLOOD PLAIN ACCORDING TO THE FLOOD INSURANCE RATE MAP PER FIRM MAP PANEL 328 OF 750, MAP NO. 35001C0328J, MAP REVISED DATE 11/04/2016, BERNILLILO COUNTY, NEW MEXICO AND INCORPORATED AREAS.

DRAINAGE CONDITIONS

1. EXISTING

THE EXISTING SITE IS A PARTIALLY DEVELOPED 0.97 AC LOT. THE CURRENT GRADING WAS DONE PER GRADING PLANS COMPLETED BY WOOTEN ENGINEERING THAT WERE APPROVED ON APRIL 7, 2015 BY THE CITY OF ALBUQUERQUE. THE APPROVED PLANS SHOWED ABOUT 7,500 SQUARE FEET OF RETAIL/ RESTAURANT BUILDING SPACE WHERE THE CURRENT PROPOSED BUILDING WILL BE LOCATED. THE SITE WAS DESIGNED AND GRADED TO DRAIN IN A WESTERLY DIRECTION (AWAY FROM 98TH ST) TOWARDS LANDSCAPE MEDIANS THROUGH SURFACE FLOWS. THESE MEDIANS THEN OUTLET TO THE EXSIEITNG 36" 98TH STREET STORM DRAIN THROUGH AN UNDERGROUND STROMDRAIN DRAIN SYSTEM CONTAINING VARYING PIPE SIZES. RUNOFF THAT DOES NOT MAKE IT TO THE LANDSCAPE MEDIANS WILL SHEET FLOW AND BE COLLECTED IN ONE OF THREE CATCH BASINS LOCATED ON 98TH STREET. THESE CATCH BASINS WERE SIZED AND BUILT BY CPN 676284.

2. PROPOSED

THE PROPOSED SITE DESIGN MATCHES THE PREVIOUSLY APPROVED DRAINAGE MANAGEMENT PLAN AND THEREFORE MEETS ALL PRIOR REQUIREMENTS REGARDING DOWNSTREAM RUNOFF. THE DEVIATIONS FROM SAID DRAINAGE MANAGEMENT PLAN IS AN INCREASE OF PERVIOUS AREAS FROM 21% TO 27% AS WELL AS A NEW SITE LAYOUT

CONCLUSION

DUE TO THE COMPLIANCE WITH THE PREVIOUSLY APPROVED DRAINAGE MANAGEMENT PLAN, WE ARE REQUESTING THAT THIS DRAINAGE AND GRADING PLAN BE APPROVED

VICINITY MAP

261 98TH STREET, ALBUQUERQUE, NM 87123
N.T.S.

DRAINAGE CERTIFICATION
I, TIM SHOEMAKER, NMPE 26935, OF THE FIRM RTM ENGINEERING, HEREBY CERTIFY THAT THIS PROJECT HAS BEEN GRADED AND WILL DRAIN IN SUBSTANTIAL COMPLIANCE WITH AND IN ACCORDANCE WITH THE DESIGN INTENT OF THE APPROVED PLAN DATED 5/2/22. THE RECORD INFORMATION EDITED ONTO THE ORIGINAL DESIGN DOCUMENT HAS BEEN OBTAINED BY CHRISTOPHER MEDINA, NMPS 15702, OF THE FIRM TERRA LAND SURVEYS. I FURTHER CERTIFY THAT I HAVE PERSONALLY VISITED THE PROJECT SITE ON 11/15/24 AND HAVE DETERMINED BY VISUAL INSPECTION THAT THE SURVEY DATA PROVIDED IS REPRESENTATIVE OF ACTUAL SITE CONDITIONS AND IS TRUE AND CORRECT TO THE BEST OF MY KNOWLEDGE AND BELIEF. THIS CERTIFICATION IS SUBMITTED IN SUPPORT OF A REQUEST FOR FINAL CERTIFICATE OF OCCUPANCY.

THE RECORD INFORMATION PRESENTED HEREON IS NOT NECESSARILY COMPLETE AND INTENDED ONLY TO VERIFY SUBSTANTIAL COMPLIANCE OF THE GRADING AND DRAINAGE ASPECTS OF THIS PROJECT. THOSE RELYING ON THIS RECORD DOCUMENT ARE ADVISED TO OBTAIN INDEPENDENT VERIFICATION OF ITS ACCURACY BEFORE USING IT FOR ANY OTHER PURPOSE.

TIM SHOEMAKER, NMPE 26935 (SEAL) EXPIRES 12-31-2025

DATE 11/15/24

RECORD DRAWING

City of Albuquerque
Planning Department
Development Review Services
HYDROLOGY SECTION
APPROVED
DATE: 05/02/22
BY: Renée C. Brissette
HydroTrans #: K09D038
THE APPROVAL OF THESE PLANS/REPORT SHALL NOT BE CONSTRUED TO PERMIT VIOLATIONS OF ANY CITY ORDINANCE OR STATE LAW, AND SHALL NOT PREVENT THE CITY OF ALBUQUERQUE FROM REQUIRING CORRECTION, OR ERROR OR DEFICIENCIES IN PLANS, SPECIFICATIONS, OR CONSTRUCTION. SUCH APPROVED PLANS SHALL NOT BE CHANGED, MODIFIED OR ALTERED WITHOUT AUTHORIZATION.

PROPOSED SITE 100 YR, 6-HR												
										100-YEAR, 6HR		
Basin	Area	Treatment A		Treatment B		Treatment C		Treatment D		WEIGHTED E	VOLUME	FLOW
	SF	%	AC	%	AC	%	AC	%	AC	IN	AC-FT	CFS
Basin 1	5399.2	0%	0	0%	0	100%	0.124	0%	0	0.95	0.0098	0.4
Basin 2	33363.2	0%	0	0%	0	0%	0	100%	0.77	2.24	0.1430	3.2
Basin 3	3605.87	0%	0	0%	0	100%	0.083	0%	0	0.95	0.0066	0.2

EXISTING SITE 100-YR, 6-HR												
										100-YEAR, 6HR		
Basin	Area	Treatment A		Treatment B		Treatment C		Treatment D		WEIGHTED E	VOLUME	FLOW
	SF	%	AC	%	AC	%	AC	%	AC	IN	AC-FT	CFS
Basin 1	4573.85	0%	0	0%	0	100%	0.105	0%	0	0.95	0.0083	0.3
Basin 2	35165.58	0%	0	0%	0	0%	0	100%	0.81	2.24	0.1507	3.3
Basin 3	2628.84	0%	0	0%	0	100%	0.060	0%	0	0.95	0.0048	0.2

NOTES

THE AREAS THAT WERE USED FOR THE STORM WATER CALCULATIONS ARE BASED ON THE SITE LAYOUT SHOWN ON THE PREVIOUS GRADING PLANS APPROVED ON APRIL 7, 2015

PIPE CALCULATIONS

EXISTING
1. PIPE DIAMETER = 12"; PIPE MATERIAL = HDPE; n = 0.010
   Q = 2.24 CFS
   PIPE SLOPE = 1.0%
   CAPACITY = 4.64 CFS
2. PIPE DIAMETER = 18"; PIPE MATERIAL = HDPE; n = 0.010
   Q = 6.23 CFS
   PIPE SLOPE = 1.0%
   CAPACITY = 13.69 CFS

PROPOSED
1. PIPE DIAMETER = 12"; PIPE MATERIAL = HDPE; n = 0.010
   Q = 3.2 CFS
   PIPE SLOPE = 1.0%
   CAPACITY = 4.67 CFS

GRADING LEGEND

DESCRIPTION	EXISTING	PROPOSED	BY OTHERS
SPOT ELEVATION	+0.00	TC:XX.XX FL:XX.XX	P:XX.XX
CONTOUR LINE	600	600	600
FLOW ARROW	(X.X%)	X.X%	

TIM SHOEMAKER NEW MEXICO 26935 PROFESSIONAL ENGINEER
04-29-2022

nm811 Know what's below. Call before you dig.

PANDA EXPRESS CHINESE KITCHEN

PANDA EXPRESS, INC.
1683 Walnut Grove Ave.
Rosemead, California
91770
Telephone: 626.799.9898
Facsimile: 626.372.8288

All ideas, designs, arrangement and plans indicated or represented by this drawing are the property of Panda Express Inc. and were created for use on this specific project. None of these ideas, designs, arrangements or plans may be used by or disclosed to any person, firm, or corporation without the written permission of Panda Express Inc.

REVISIONS:

ISSUE DATE:

DRAWN BY: rtm

PANDA PROJECT #: S8-23-D220241
PANDA STORE #: D220241
ARCH PROJECT #: 21229

rtm engineering consultants
650 E. Algonquin Road
Suite 250
Schaumburg, IL 60173
Telephone: (847) 756 - 4180
www.rtmec.com
OH Certificate of Authority: 05046

Heights Venture ARCHITECTURE DESIGN
HOUSTON
1111 North Loop West, Suite 800
Houston, Texas 77008
713 869 1103 V
DALLAS
5717 Legacy Drive, Suite 240
Plano, Texas. 75024
972 490 7292 V

PANDA EXPRESS

261 98TH STREET
ALBUQUERQUE, NM 87123

GRADING AND DRAINAGE PLAN

C01.0

PLANNING PERMIT SET

261 98TH STREET

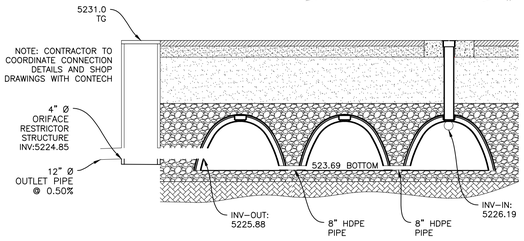

CONTECH CROSS SECTION

N.T.S.

UTILITY PLAN

SCALE: 1" = 20'

RECORD DRAWING

NOTES:

1. EX. ITEMS SHALL BE FIELD VERIFIED. RELOCATION OR ADJUSTMENT MAY BE NEEDED. CONTRACTOR TO VERIFY.
2. CONTRACTOR SHALL VERIFY ALL WORK, INCLUDING BUT LIMITED TO, SIZES, MATERIALS AND LOCATION, WITH UTILITY COMPANIES PRIOR TO INSTALLATION.
3. VERIFY SERVICE LOCATIONS WITH BUILDING PLANS PRIOR TO CONSTRUCTION AND NOTIFY ENGINEER OF ANY DISCREPANCIES.
4. RIM GRADES ALONG CURBS ARE FLOW LINE ELEVATIONS.
5. SEE SPECIFICATIONS SHEETS FOR ALL STORM, SANITARY, AND WATER PIPE AND STRUCTURE SPECIFICATIONS.
6. ALL UTILITY TIE DIMENSIONS ARE FROM CENTER OF UTILITY AND TO BACK OF CURB WHEN TIED TO CURB LINES, UNLESS OTHERWISE NOTED.
7. CONTRACTOR TO INSPECT EXISTING SEWER AT POINT OF CONNECTION. CONTRACTOR TO VERIFY THAT EXISTING PIPE IS IN GOOD WORKING CONDITION. CONTRACTOR TO REPAIR AS REQUIRED.
8. CONTRACTOR TO NOTIFY OWNER/ENGINEER IF CONFLICTS OCCUR.
9. NEW OPENING/CONNECTIONS TO EXISTING MANHOLE/STRUCTURES SHALL BE CORE–DRILLED.
10. TEST PITS MUST BE EXCAVATED IN ADVANCE OF CONSTRUCTION IN ORDER TO CONFIRM DEPTH AND LOCATION OF EXISTING UTILITIES. NO ADDITIONAL PAYMENT WILL BE MADE FOR TEST PIT EXCAVATION.
11. ALL NEW STORM STRUCTURES SHALL HAVE ADA COMPATIBLE OPEN LIDS, PER JURISDICTION STANDARDS.
12. ALL UTILITY CONSTRUCTION SHALL BE IN ACCORDANCE WITH PERKINS TOWNSHIP/ERIE COUNTY PUBLIC UTILITIES AND CROSS CONNECTION CONTROL REGULATIONS AND STANDARDS.
13. THE CONTRACTOR SHALL OBTAIN AND PAY FOR ALL INSPECTIONS, CERTIFICATIONS, EQUIPMENT ETC., THAT MAY BE REQUIRED.
14. CONTRACTOR SHALL COORDINATE GAS, ELECTRIC AND TELEPHONE CONDUIT, PIPING, AND CONDUCTOR REQUIREMENTS WITH MEP PLANS AND UTILITY PROVIDER PRIOR TO INSTALLATION.
15. STREET ASPHALT PAVEMENT SHALL BE RESTORED IN ACCORDANCE WITH CITY OF ALBUQUERQUE REQUIREMENTS AND STANDARDS.

UTILITY LEGEND

DESCRIPTION	EXISTING	PROPOSED
WATERMAIN PIPE	W	W
STORM SEWER PIPE		
SANITARY SEWER PIPE		
ELECTRICAL DUCT BANK	E	E
NATURAL GAS LINE	G	G
COMMUNICATIONS LINE	COM	COM
OVERHEAD LINE	OHW	OHW
TELEVISION CABLE	TV	TV
UNDERGROUND WIRE	UGW	UGW
TELEPHONE CABLE	T	T
FIBER OPTIC CABLE	FO	FO
AERIAL WIRES	A	A
EASEMENT LINE		
VENT LINE		
VALVE VAULT		
WATER B–BOX		
WATER VALVE BOX		
FIRE HYDRANT		
WELL HEAD		
FIRE DEPARTMENT CONNECTION		
STORM INLET		
STORM MANHOLE		
CATCH BASIN		
STORM CLEANOUT		
DOWNSPOUT	DS	DS
FLARED END SECTION		
SANITARY MANHOLE		
SANITARY CLEANOUT		
LIGHT POLE		
TELEPHONE MANHOLE		
POWER POLE		
GAS VALVE		
GAS METER		
HAND HOLE	HH	HH
MAIL BOX	M	
ELECTRICAL MANHOLE		
CABLE TV PEDESTAL	TV	
TELEPHONE PEDESTAL	T	

T M SHOEMAKER NEW MEXICO 26935 PROFESSIONAL ENGINEER

EXPIRES 12–31–2023

nm811 Know what's below. Call before you dig.

PANDA EXPRESS, INC.
1683 Walnut Grove Ave.
Rosemead, California
91770
Telephone: 626.799.9898
Facsimile: 626.372.8288

All ideas, designs, arrangement and plans indicated or represented by this drawing are the property of Panda Express Inc. and were created for use on this specific project. None of these ideas, designs, arrangements or plans may be used by or disclosed to any person, firm, or corporation without the written permission of Panda Express Inc.

REVISIONS:

	CITY COMMENTS	02-14-23
	PANDA COMMENTS	02-14-23
	CITY COMMENTS 2	04-28-23
	CITY COMMENTS 3	06-28-23
	CONSTRUCTION SET REV.	08-01-23
6	CONSTRUCTION SET REV.	09-08-23

ISSUE DATE:

1	DRB SUBMITTAL	06-17-2022
2	PERMIT SET	09-09-2022
3	BID SET	10-03-2022
4	CONSTRUCTION SET	02-14-2023
5	CONSTRUCTION SET	08-01-2023
6	DELTA 6 REV.	09-11-2023

DRAWN BY: rtm

PANDA PROJECT #: S8-23-D220241
PANDA STORE #: D220241
ARCH PROJECT #: 21229

rtm engineering consultants
9225 Indian Creek Pkwy
Suite 1075
Overland Park, KS 66210
Telephone: (913) 322 - 1400
www.rtmec.com
KS Certificate of Authority: E-2641

Heights Venture ARCHITECTURE DESIGN
HOUSTON
1111 North Loop West, Suite 800
Houston, Texas 77008
713 869 1103 V
DALLAS
5717 Legacy Drive, Suite 240
Plano, Texas. 75024
972 490 7292 V

PANDA EXPRESS

PANDA HOME - CUSTOM
261 98TH STREET
ALBUQUERQUE, NM 87123

UTILITY PLAN

C04.0

CONSTRUCTION ISSUE

PANDA HOME - SQUARE CUSTOM

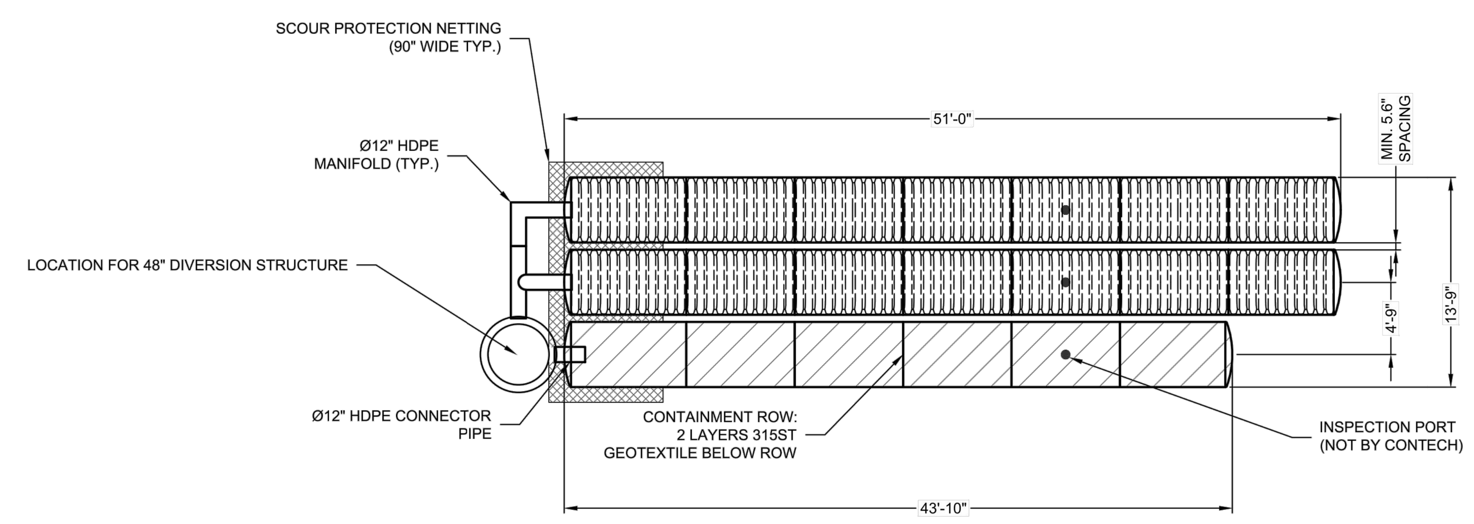

ASSEMBLY

SCALE: 1"=10'
CHAMBER VOLUME: 993 CF
STONE VOLUME: 750 CF
TOTAL VOLUME: 1,743 CF
LOADING: H20/H25

ITEM NUMBER	ITEM DESCRIPTION	CES PART NUMBER	QTY	UNITS
1	CHAMBERMAXX START CHAMBER	APCM 003.3051.004	3	EA
2	CHAMBERMAXX MIDDLE CHAMBER	APCM 003.3051.005	14	EA
3	CHAMBERMAXX END CHAMBER	APCM 003.3051.006	6	EA
4	CONTECH C-40 NON-WOVEN GEOTEXTILE 15 FT X 360 FT	APCM 001.0015.002	1	ROLL
5	CMX SCOUR NET HP300, 8' WIDE (281' MAX. LENGTH)	APCM 007.0075.002	1 @ 16	QTY @ LF
6	Ø12" HDPE TEE	APCM 001.0012.009	1	EA
7	Ø12" 90 DEGREE HDPE ELBOW	APCM 001.0012.010	1	EA

ITEM NUMBER	ITEM DESCRIPTION	CES PART NUMBER	QTY	UNITS
8	Ø12" HDPE CONNECTOR PIPE	N/A	1 @ 2	QTY @ LF
9	Ø12" HDPE SPLIT COUPLER	PEF12SPCP	1	EA
10	315ST CONTAINMENT ROW LINER, 360 FT x 12.5 FT	APCM 007.0015.015	1	ROLL
11	INSTALLATION GUIDE	N/A	1	EA

The design and information shown on this drawing is provided as a service to the project owner, engineer and contractor by Contech Engineered Solutions LLC ("Contech"). Neither this drawing, nor any part thereof, may be used, reproduced or modified in any manner without the prior written consent of Contech. Failure to comply is done at the user's own risk and Contech expressly disclaims any liability or responsibility for such use.

If discrepancies between the supplied information upon which the drawing is based and actual field conditions are encountered as site work progresses, these discrepancies must be reported to Contech immediately for re-evaluation of the design. Contech accepts no liability for designs based on missing, incomplete or inaccurate information NOT BY CONTECH.

MARK	DATE	REVISION DESCRIPTION	BY

CONTECH ENGINEERED SOLUTIONS LLC
www.ContechES.com
7037 Ridge Road, Hanover, MD 21076
866-740-3318 410-796-5505 866-376-8511 FAX

CHAMBERMaxx PATENT PENDING
CONTECH PROPOSAL DRAWING

CHAMBERMAXX RETENTION SYSTEM - 723819-10
98th Street - Panda Express
Albuquerque
SITE DESIGNATION: N/A

PROJECT No.: 723819 | SEQ. No.: 10 | DATE: 09/09/2022
DESIGNED: RLH | DRAWN: RLH
CHECKED: --- | APPROVED: ---
SHEET NO.: 1 OF 4

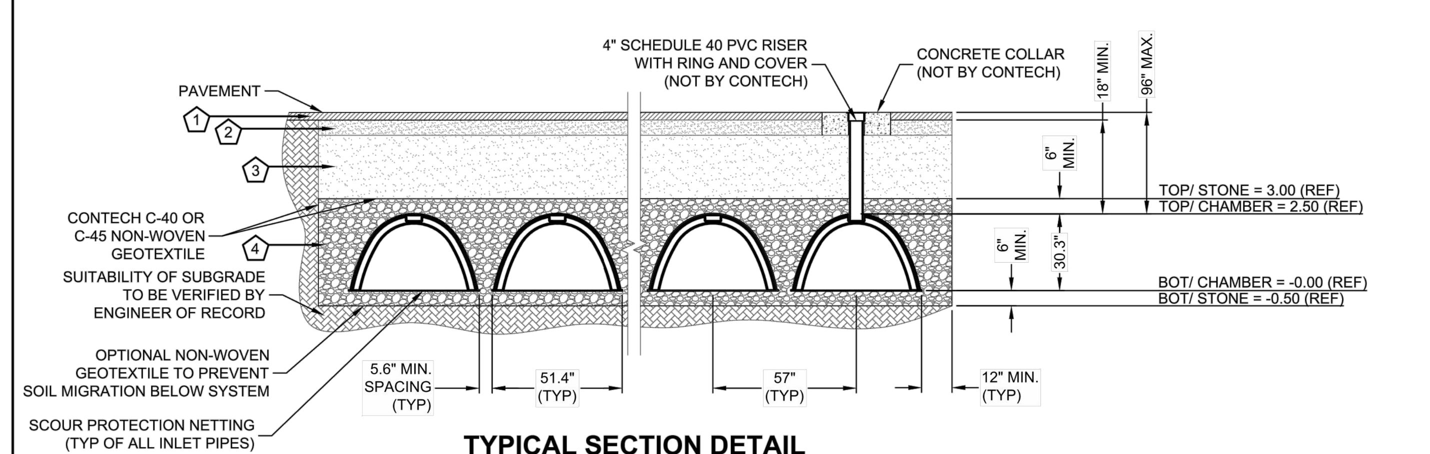

TYPICAL SECTION DETAIL
NOT TO SCALE

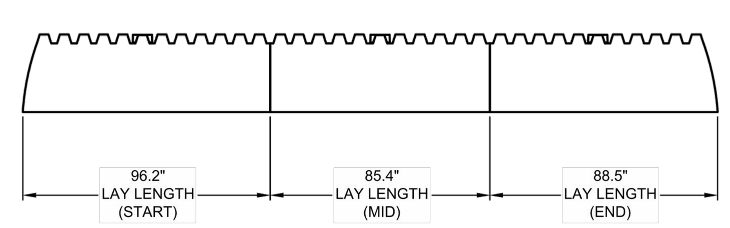

TYPICAL ELEVATION VIEW
NOT TO SCALE

KEY
1. FLEXIBLE PAVEMENT.
2. GRANULAR ROAD BASE.
3. ANY SUITABLE NATIVE OR GENERAL BACKFILL, SEE ENGINEER PLANS.
4. THE BACKFILL MATERIAL SHALL BE FREE-DRAINING ANGULAR WASHED STONE 3/4" - 2" PARTICLE SIZE. MATERIAL SHALL BE PLACED IN 8"-10" MAXIMUM LIFTS. MATERIAL SHALL BE WORKED INTO THE CHAMBER SPACING BY MEANS OF SHOVEL-SLICING, RODDING, AIR-TAMPER, VIBRATORY ROD, OR OTHER EFFECTIVE METHODS. COMPACTION IS CONSIDERED ADEQUATE WHEN NO FURTHER YIELDING OF THE MATERIAL IS OBSERVED UNDER THE COMPACTOR, OR UNDER FOOT, AND THE PROJECT ENGINEER OR THEIR REPRESENTATIVE IS SATISFIED WITH THE LEVEL OF COMPACTION. INADEQUATE COMPACTION CAN LEAD TO EXCESSIVE DEFLECTIONS WITHIN THE SYSTEM AND SETTLEMENT OF THE SOILS OVER THE SYSTEM. BACKFILL SHALL BE PLACED SUCH THAT THERE IS NO MORE THAN A TWO-LIFT DIFFERENTIAL BETWEEN THE SIDES OF ANY CHAMBER IN THE SYSTEM AT ALL TIMES DURING THE BACKFILL PROCESS. BACKFILL SHALL BE ADVANCED ALONG THE LENGTH OF THE SYSTEM AT THE SAME RATE TO AVOID DIFFERENTIAL LOADING ON ANY PIPES IN THE SYSTEM.

EQUIPMENT USED TO PLACE AND COMPACT THE BACKFILL SHALL BE OF A SIZE AND TYPE SO AS NOT TO DISTORT, DAMAGE, OR DISPLACE THE CHAMBERS. ATTENTION MUST BE GIVEN TO PROVIDING ADEQUATE MINIMUM COVER FOR SUCH EQUIPMENT, AND MAINTAIN BALANCED LOADING ON ALL CHAMBERS IN THE SYSTEM, DURING ALL SUCH OPERATIONS.

OTHER ALTERNATE BACKFILL MATERIAL MAY BE ALLOWED DEPENDING ON SITE SPECIFIC CONDITIONS. CONTACT YOUR LOCAL CONTECH REPRESENTATIVE FOR DETAILS.

The design and information shown on this drawing is provided as a service to the project owner, engineer and contractor by Contech Engineered Solutions LLC ("Contech"). Neither this drawing, nor any part thereof, may be used, reproduced or modified in any manner without the prior written consent of Contech. Failure to comply is done at the user's own risk and Contech expressly disclaims any liability or responsibility for such use.

If discrepancies between the supplied information upon which the drawing is based and actual field conditions are encountered as site work progresses, these discrepancies must be reported to Contech immediately for re-evaluation of the design. Contech accepts no liability for designs based on missing, incomplete or inaccurate information NOT BY CONTECH.

CONTECH ENGINEERED SOLUTIONS LLC
www.ContechES.com
7037 Ridge Road, Hanover, MD 21076
866-740-3318 410-796-5505 866-376-8511 FAX

CHAMBERMaxx PATENT PENDING
CONTECH PROPOSAL DRAWING

CHAMBERMAXX RETENTION SYSTEM - 723819-10
98th Street - Panda Express
Albuquerque
SITE DESIGNATION: N/A

PROJECT No.: 723819 | SEQ. No.: 10 | DATE: 09/09/2022
DESIGNED: RLH | DRAWN: RLH
CHECKED: --- | APPROVED: ---
SHEET NO.: 2 OF 4

1 CONTECH DETAILS I NTS

NOTES:

1. CONTRACTOR TO COORDINATE CONNECTION DETAILS AND SHOP DRAWINGS WITH CONTECH

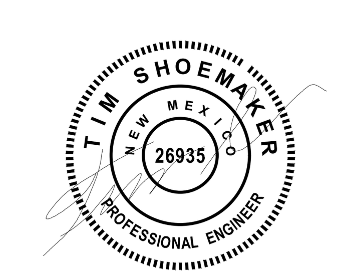

EXPIRES 12-31-2023

nm811 Know what's below. Call before you dig.

PANDA EXPRESS CHINESE KITCHEN

PANDA EXPRESS, INC.
1683 Walnut Grove Ave.
Rosemead, California
91770
Telephone: 626.799.9898
Facsimile: 626.372.8288

All ideas, designs, arrangement and plans indicated or represented by this drawing are the property of Panda Express Inc. and were created for use on this specific project. None of these ideas, designs, arrangements or plans may be used by or disclosed to any person, firm, or corporation without the written permission of Panda Express Inc.

REVISIONS:

	CITY COMMENTS	02-14-23
	PANDA COMMENTS	02-14-23
	CITY COMMENTS 2	04-28-23
	CITY COMMENTS 3	06-28-23
	CONSTRUCTION SET REV.	08-01-23

ISSUE DATE:

1	DRB SUBMITTAL	06-17-2022
2	PERMIT SET	09-09-2022
3	BID SET	10-03-2022
4	CONSTRUCTION SET	02-14-2023
5	CONSTRUCTION SET	08-01-2023
6	DELTA 6 REV.	09-11-2023

DRAWN BY: rtm

PANDA PROJECT #: S8-23-D220241
PANDA STORE #: D220241
ARCH PROJECT #: 21229

rtm engineering consultants
9225 Indian Creek Pkwy
Suite 1075
Overland Park, KS 66210
Telephone: (913) 322 - 1400
www.rtmec.com
KS Certificate of Authority: E-2641

Heights Venture ARCHITECTURE DESIGN
HOUSTON
1111 North Loop West, Suite 800
Houston, Texas 77008
713 869 1103 V
DALLAS
5717 Legacy Drive, Suite 240
Plano, Texas. 75024
972 490 7292 V

PANDA EXPRESS
PANDA HOME - CUSTOM
261 98TH STREET
ALBUQUERQUE, NM 87123

UTILITY DETAILS III

C04.4

CONSTRUCTION ISSUE

PANDA HOME - SQUARE CUSTOM

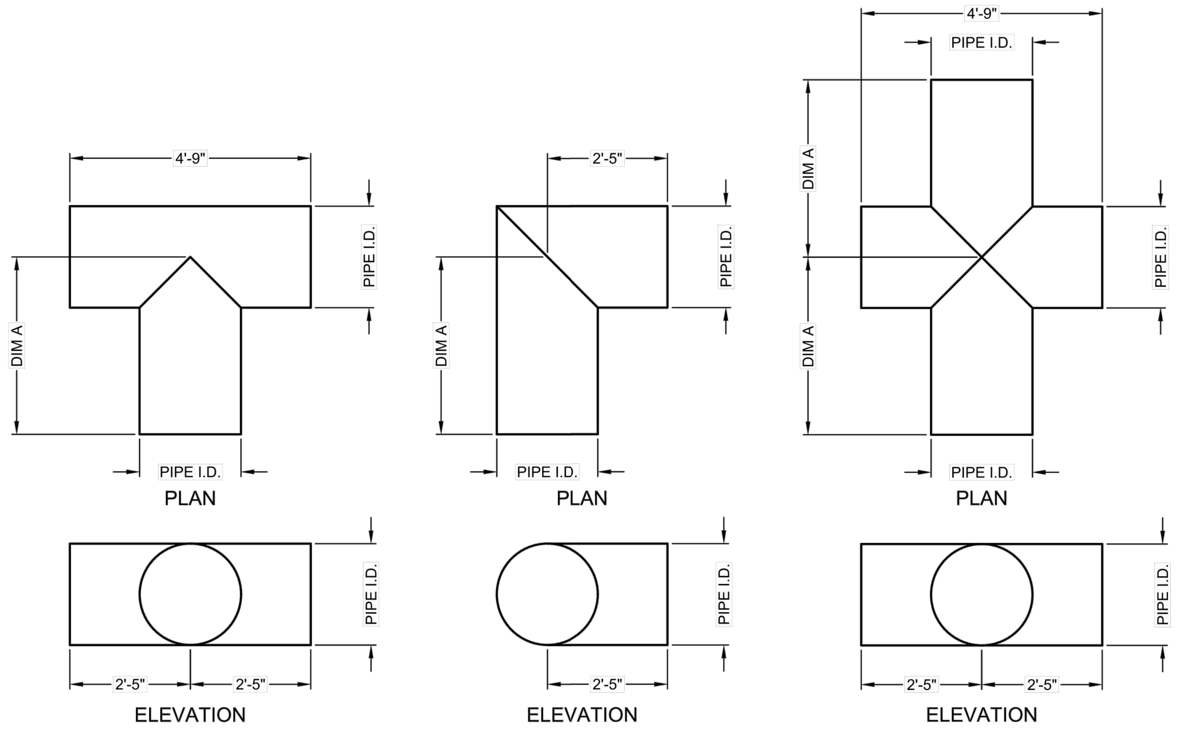

TEE — **ELBOW** — **CROSS-OVER**

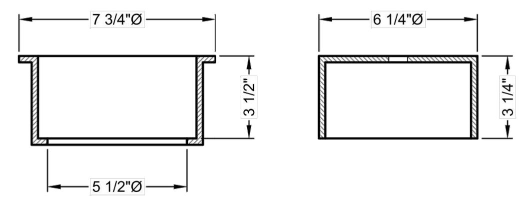

RING AND COVER DETAIL
NOT TO SCALE

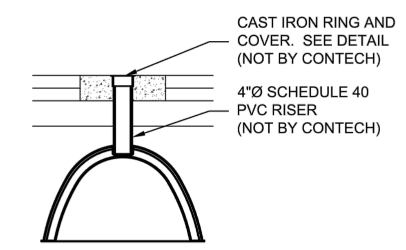

INSPECTION PORT DETAIL
NOT TO SCALE

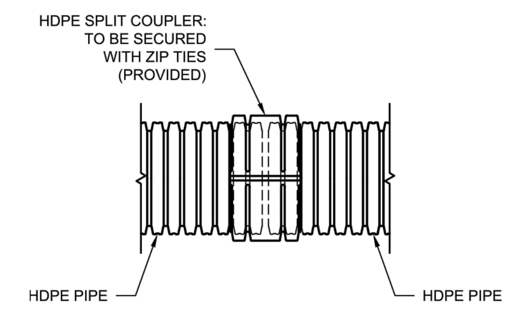

HDPE SPLIT COUPLER DETAIL

STANDARD MANIFOLD COMPONENTS - NOT TO SCALE				
	AVAILABLE DIAMETERS - INCHES			
TEE	12	15	18	24
ELBOW	12	15	18	24
DIM A	42	42	48	48

GENERAL NOTES:
1. FITTING MATERIAL TO BE MANUFACTURED FROM CORRUGATED HIGH DENSITY POLYETHYLENE, AASHTO M294 PIPE.
2. FITTINGS TO BE FABRICATED IN ACCORDANCE WITH THE REQUIREMENT OF AASHTO M294.
3. FITTINGS DESIGNED TO PROTRUDE 6" INTO THE END OF THE INLET CHAMBERS.
4. MANIFOLD TEE AND ELBOW JOINT TO BE CONNECTED UTILIZING HDPE SPLIT COUPLERS.

TYPICAL MANIFOLD DETAILS

HDPE SPLIT COUPLERS	
COUPLER SIZE	PART NUMBER
12"Ø SPLIT COUPLER	PEF12SPCP
15"Ø SPLIT COUPLER	PEF15SPCP
18"Ø SPLIT COUPLER	PEF18SPCP
24"Ø SPLIT COUPLER	PEF24SPCP

MARK	DATE	REVISION DESCRIPTION	BY

CONTECH ENGINEERED SOLUTIONS LLC
www.ContechES.com
7037 Ridge Road, Hanover, MD 21076
866-740-3318 410-796-5505 866-376-8511 FAX

CHAMBERMaxx® PATENT PENDING
CONTECH PROPOSAL DRAWING

CHAMBERMAXX RETENTION SYSTEM - 723819-10
98th Street - Panda Express
Albuquerque
SITE DESIGNATION: N/A

PROJECT No.: 723819 SEQ. No.: 10 DATE: 09/09/2022
DESIGNED: RLH DRAWN: RLH
CHECKED: --- APPROVED: ---
SHEET NO.: 3 OF 4

CHAMBERMAXX DESIGN DETAILS			
FEATURE	START CHAMBER	MIDDLE CHAMBER	END CHAMBER
OVERALL CHAMBER HEIGHT - IN	30.3	30.3	30.3
OVERALL CHAMBER WIDTH - IN	51.4	51.4	51.4
ACTUAL LENGTH - IN	98.4	91.0	92.0
INSTALLED LAY LENGTHS - IN	96.2	85.4	88.5
CHAMBER STORAGE VOLUME - CF	50.2	47.2	46.2
CHAMBER STORAGE PER LINEAR FOOT - CF/LF	6.3	6.6	6.3
*MIN. INSTALLED CHAMBER VOLUME - CF	78.1	75.1	74.1
*MIN. INSTALLED CHAMBER VOLUME PER LINEAR FOOT - CF/LF	9.7	10.6	10.0
CHAMBER WEIGHT - LB	83	73	76
*6" OF STONE ABOVE AND BELOW CHAMBER, 5.6" CHAMBER SPACING AND 40% POROSITY			

GENERAL NOTES

1. ALL ELEVATIONS, DIMENSIONS AND LOCATIONS OF RISERS AND INLETS SHALL BE VERIFIED BY THE ENGINEER OF RECORD.
2. PRIOR TO INSTALLATION OF THE CHAMBERMAXX SYSTEM A PRE-CONSTRUCTION MEETING SHALL BE CONDUCTED. THOSE REQUIRED TO ATTEND ARE THE SUPPLIER OF THE SYSTEM, THE GENERAL CONTRACTOR, SUB-CONTRACTORS AND THE ENGINEER.
3. CHAMBERMAXX CHAMBERS ARE MANUFACTURED FROM POLYPROPYLENE PLASTIC.
4. CHAMBERMAXX SYSTEM TO MEET AASHTO HS20/HS25 LIVE LOADING, PER AASHTO LRFD SECTION 12.
5. ACCESS COVERS TO MEET AASHTO HS20/HS25 LIVE LOADING.
6. MINIMUM COVER IS 18-INCHES TO BOTTOM OF FLEXIBLE PAVEMENT OR TO TOP OF RIGID PAVEMENT. FOR COVER HEIGHTS GREATER THAN 96-INCHES CONTACT YOUR LOCAL REPRESENTATIVE.
7. ALL PARTS PROVIDED BY CONTECH UNLESS OTHERWISE NOTED.
8. FOR INFORMATION ON PRE-TREATMENT SYSTEMS, REFERENCE CONTECH PRE-TREATMENT SYSTEM STANDARD DETAILS OR CONTACT YOUR LOCAL REPRESENTATIVE.
9. CHAMBERMAXX BY CONTECH ENGINEERED SOLUTIONS (800) 925-5240

INSTALLATION NOTES

1. CHAMBERMAXX INSTALLATION GUIDE TO BE REVIEWED BY CONTRACTOR PRIOR TO INSTALLATION.
2. PRIOR TO PLACING BEDDING, THE FOUNDATION MUST BE CONSTRUCTED TO A UNIFORM AND STABLE GRADE. IN THE EVENT THAT UNSUITABLE FOUNDATION MATERIALS ARE ENCOUNTERED DURING EXCAVATION, UNSUITABLE MATERIAL SHALL BE REMOVED AND BROUGHT BACK TO GRADE WITH FILL MATERIAL AS APPROVED BY THE ENGINEER OF RECORD. ONCE THE FOUNDATION PREPARATION IS COMPLETE, THE BEDDING MATERIAL CAN BE PLACED.
3. THE SCOUR PROTECTION NETTING TO EXTEND 1'-0" BEYOND OUTSIDE EDGE OF INLET CHAMBERS.
4. COVER ANY OPEN VOID SPACES GREATER THAN 3/4" ON CHAMBERS WITH A NON-WOVEN GEOTEXTILE TO PREVENT INFILTRATION OF BACKFILL MATERIAL.
5. STONE EMBEDMENT MATERIAL SHALL BE INSTALLED TO 95% STANDARD PROCTOR DENSITY AND PLACED IN 6-INCH TO 8-INCH LIFTS SUCH THAT THERE IS NO MORE THAN A TWO LIFT DIFFERENTIAL BETWEEN ANY OF THE CHAMBERS AT ANY TIME. GRANULAR BACKFILL MATERIAL SHALL BE COMPACTED TO 90% SPD. BACKFILLING SHALL BE ADVANCED ALONG THE LENGTH OF THE CHAMBER ROWS AT THE SAME RATE TO AVOID DIFFERENTIAL LOADING AND DISPLACEMENT OF THE CHAMBERS. THE MINIMUM CHAMBER SPACING MUST BE MAINTAINED.
6. REFER TO CHAMBERMAXX INSTALLATION GUIDE FOR TEMPORARY CONSTRUCTION LOADING GUIDELINES.
7. IT IS ALWAYS THE CONTRACTOR'S RESPONSIBILITY TO FOLLOW OSHA GUIDELINES FOR SAFE PRACTICES.
8. GENERAL INSTALLATION METHODS AND MATERIALS TO BE IN ACCORDANCE WITH ASTM D2321.
9. ANTI-FLOTATION PROVISIONS DUE TO HIGH GROUNDWATER OR OTHER FLOTATION CONCERNS ARE SITE-SPECIFIC DESIGN CONSIDERATIONS AND SHALL BE SPECIFIED BY ENGINEER ON RECORD.

MARK	DATE	REVISION DESCRIPTION	BY

CONTECH ENGINEERED SOLUTIONS LLC
www.ContechES.com
7037 Ridge Road, Hanover, MD 21076
866-740-3318 410-796-5505 866-376-8511 FAX

CHAMBERMaxx® PATENT PENDING
CONTECH PROPOSAL DRAWING

CHAMBERMAXX RETENTION SYSTEM - 723819-10
98th Street - Panda Express
Albuquerque
SITE DESIGNATION: N/A

PROJECT No.: 723819 SEQ. No.: 10 DATE: 09/09/2022
DESIGNED: RLH DRAWN: RLH
CHECKED: --- APPROVED: ---
SHEET NO.: 4 OF 4

1 CONTECH DETAILS II NTS

NOTES:

1. CONTRACTOR TO COORDINATE CONNECTION DETAILS AND SHOP DRAWINGS WITH CONTECH

TIM SHOEMAKER NEW MEXICO 26935 PROFESSIONAL ENGINEER
EXPIRES 12-31-2023

nm811 Know what's below. Call before you dig.

PANDA EXPRESS, INC.
1683 Walnut Grove Ave.
Rosemead, California
91770
Telephone: 626.799.9898
Facsimile: 626.372.8288

All ideas, designs, arrangement and plans indicated or represented by this drawing are the property of Panda Express Inc. and were created for use on this specific project. None of these ideas, designs, arrangements or plans may be used by or disclosed to any person, firm, or corporation without the written permission of Panda Express Inc.

REVISIONS:

	CITY COMMENTS	02-14-23
	PANDA COMMENTS	02-14-23
	CITY COMMENTS 2	04-28-23
	CITY COMMENTS 3	06-28-23
	CONSTRUCTION SET REV.	08-01-23

ISSUE DATE:

1	DRB SUBMITTAL	06-17-2022
2	PERMIT SET	09-09-2022
3	BID SET	10-03-2022
4	CONSTRUCTION SET	02-14-2023
5	CONSTRUCTION SET	08-01-2023
6	DELTA 6 REV.	09-11-2023

DRAWN BY: rtm

PANDA PROJECT #: S8-23-D220241
PANDA STORE #: D220241
ARCH PROJECT #: 21229

rtm engineering consultants
9225 Indian Creek Pkwy
Suite 1075
Overland Park, KS 66210
Telephone: (913) 322 - 1400
www.rtmec.com
KS Certificate of Authority: E-2641

Heights Venture ARCHITECTURE DESIGN
HOUSTON
1111 North Loop West, Suite 800
Houston, Texas 77008
713 869 1103 V
DALLAS
5717 Legacy Drive, Suite 240
Plano, Texas. 75024
972 490 7292 V

PANDA EXPRESS
PANDA HOME - CUSTOM
261 98TH STREET
ALBUQUERQUE, NM 87123

UTILITY DETAILS IV

C04.5

CONSTRUCTION ISSUE

PANDA HOME - SQUARE CUSTOM

GRADING PLAN

SCALE: 1" = 20'

SURVEYOR'S CERTIFICATE

I, CHRISTOPHER A. MEDINA, N.M.P.L.S. NO. 15702, DO HEREBY CERTIFY THAT THE AS–BUILT INFORMATION SHOWN ON SHEETS 9 AND SHEET 12, AND THE ACTUAL SURVEY WHICH IT WAS DERIVED FROM WAS PERFORMED BY ME OR UNDER MY DIRECT SUPERVISION; THAT THIS AS–BUILT SURVEY WAS PERFORMED IN THE MONTH OF OCTOBER 2023; AND THAT THE INFORMATION SHOWN IS TRUE AND CORRECT TO THE BEST OF MY KNOWLEDGE AND BELIEF AND THAT IT MEETS ALL REQUIREMENTS LISTED UNDER THE STANDARD DRAWINGS AND STANDARD SPECIFICATIONS FOR SURVEYING.

CHRISTOPHER A. MEDINA, NMPLS NO. 15702

NOV. 14, 2024
DATE

CHRISTOPHER A. MEDINA — NEW MEXICO — 15702 — 11/14/2024 — REGISTERED PROFESSIONAL SURVEYOR

GRADING LEGEND			
DESCRIPTION	EXISTING	PROPOSED	BY OTHERS
SPOT ELEVATION	0.00	TC:XX.XX FL:XX.XX	P:XX.XX
CONTOUR LINE	600	600	600
FLOW ARROW	(X.X%)	X.X%	

NOTES:

1. PERVIOUS/ IMPERVIOUS AREA:

   EXISTING
   PERVIOUS–0.19 AC (19.5%)
   IMPERVIOUS–0.78 AC (80.5%)
   PROPOSED
   PERVIOUS–0.20 AC (21%)
   IMPERVIOUS–0.77 AC (79%)

   SEE SHEETS EH.01 AND EH.02 FOR FULL EXHIBIT

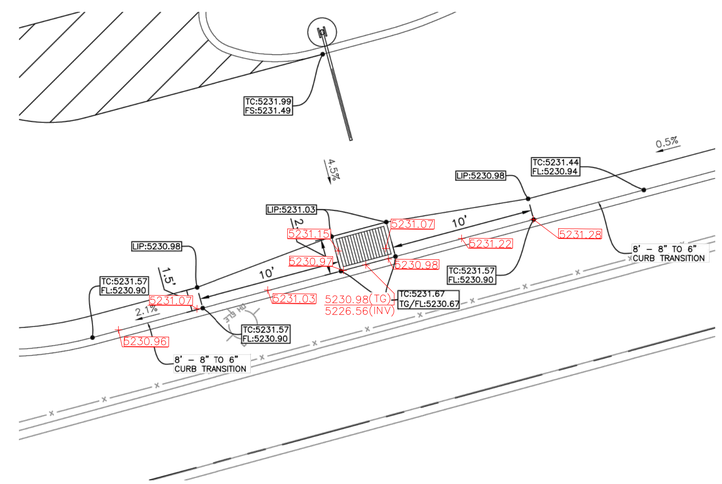

INLET GRADING DETAIL 1

SCALE: 1" = 5'

GRADING NARRATIVE:

THE PROPOSED LOT IS TO MATCH THE PREVIOUSLY APPROVED GRADING PLANS FOR THIS SITE. THE SITE DRAINS FROM EAST TO WEST AND IS COLLECTED VIA A GRATED INLET AND MEDIAN. THE SITE IS BOUNDED BY 98TH STREET TO THE EAST AND AN EXISTING PARKING LOT TO THE WEST.

TIM SHOEMAKER — NEW MEXICO — 26935 — PROFESSIONAL ENGINEER

EXPIRES 12–31–2023

nm811 — Know what's below. Call before you dig.

PANDA EXPRESS CHINESE KITCHEN

PANDA EXPRESS, INC.
1683 Walnut Grove Ave.
Rosemead, California
91770
Telephone: 626.799.9898
Facsimile: 626.372.8288

All ideas, designs, arrangement and plans indicated or represented by this drawing are the property of Panda Express Inc. and were created for use on this specific project. None of these ideas, designs, arrangements or plans may be used by or disclosed to any person, firm, or corporation without the written permission of Panda Express Inc.

REVISIONS:

	CITY COMMENTS	02-14-23
	PANDA COMMENTS	02-14-23
	CITY COMMENTS 2	04-28-23
	CITY COMMENTS 3	06-28-23
	CONSTRUCTION SET REV.	08-01-23
6	CONSTRUCTION SET REV.	09-08-23

ISSUE DATE:

1	DRB SUBMITTAL	06-17-2022
2	PERMIT SET	09-09-2022
3	BID SET	10-03-2022
4	CONSTRUCTION SET	02-14-2023
5	CONSTRUCTION SET	08-01-2023
6	DELTA 6 REV.	09-11-2023

DRAWN BY: rtm

PANDA PROJECT #: S8-23-D220241
PANDA STORE #: D220241
ARCH PROJECT #: 21229

rtm engineering consultants
9225 Indian Creek Pkwy
Suite 1075
Overland Park, KS 66210
Telephone: (913) 322 - 1400
www.rtmec.com
KS Certificate of Authority: E-2641

Heights Venture ARCHITECTURE DESIGN
HOUSTON
1111 North Loop West, Suite 800
Houston, Texas 77008
713 869 1103 V
DALLAS
5717 Legacy Drive, Suite 240
Plano, Texas. 75024
972 490 7292 V

PANDA EXPRESS

PANDA HOME - CUSTOM
261 98TH STREET
ALBUQUERQUE, NM 87123

GRADING PLAN

C05.0

CONSTRUCTION ISSUE

PANDA HOME - SQUARE CUSTOM