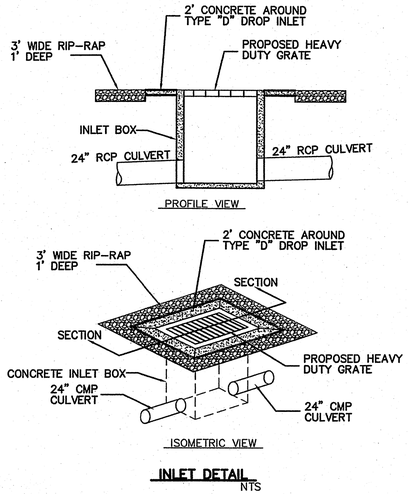

INLET DETAIL
NTS

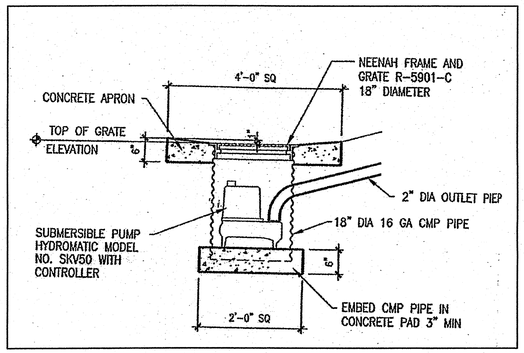

SUMP PUMP DETAIL
NTS

DRAINAGE PLAN:

LEGAL DESCRIPTION: TRACTS B-1-B-1-A-1 & B-1-B-1-A-2, WEST 66 ADDITION

SITE AREA: 3.0276 ACRES

FLOOD HAZARD STATEMENT: F.E.M.A. FLOODWAY BOUNDARY AND FLOODWAY MAP DATED NOVEMBER 19, 2003 (PANEL NO. 35001C0329 E) INDICATES A FLOOD HAZARD ZONE X WHICH IS AN AREA DETERMINED TO BE OUTSIDE THE 500-YEAR FLOODPLAIN.
LOCATION AND DESCRIPTION

EXISTING DRAINAGE CONDITIONS:

THE DRAINAGE ANALYSIS FOR THIS SITE IS IN ACCORDANCE WITH THE CITY OF ALBUQUERQUE DEVELOPMENT PROCESS MANUAL SECTION 22.2, HYDROLOGY. THE PROPERTY IS LOCATED IN ZONE 1. THE 100-YEAR, 6-HOUR STORM IS 2.20 INCHES.

THE SITE CURRENTLY DRAINS FROM SOUTH TO NORTH TO EXISTING DEPRESSED AREAS. THERE ARE NO OFFSITE FLOWS ON THE SITE.

DEVELOPED DRAINAGE CONDITIONS:

THESE TWO PROPERTIES WILL BE DEVELOPED WITH A COMMERCIAL FUELING STATION, AN AUTOMATIC TRUCK WASH, AND OFFICE THAT WILL SERVE THE ZANIOS FOOD WAREHOUSE SITE TO THE NORTH. THE DRAINAGE CONCEPT FOR THIS SITE IS TO COLLECT THE RUNOFF IN A STORM DRAIN SYSTEM WHICH WILL DRAIN TO THE EXISTING DETENTION POND NORTH OF THE SITE IN THE ZANIOS PARKING AREA ADJACENT TO AIRPORT ROAD. THE DETENTION POND WILL BE DEEPENED TO ALLOW FOR THE ADDITIONAL RUNOFF FROM THESE TRACTS. ACCORDING TO THE APPROVED DRAINAGE PLAN FOR ZANIOS FOOD WAREHOUSE ADDITION, AS-BUILTS DATED 4-3-03, THE DETENTION POND VOLUME IS 71,210 CUBIC-FEET. THE DETENTION POND DRAINS TO A SUMP PUMP WHICH DISCHARGES TO AN INLET THAT DRAINS TO THE STORM DRAIN IN AIRPORT ROAD. ACCORDING TO THE APPROVED DRAINAGE PLAN, THE SITE IS ALLOWED 0.1 CFS/ACRE.

THE PROPERTY HAS BEEN DIVIDED INTO THREE DRAINAGE BASINS. BASIN A INCLUDES THE WESTERN PORTION OF THE SITE. RUNOFF FROM THIS BASIN WILL DRAIN TO A STORM INLET LOCATED NEAR THE NORTHWEST CORNER OF THE SITE. A TOTAL OF 4.64 CFS WILL BE COLLECTED BY THE STORM INLET AND DISCHARGE TO AN 18 INCH STORM DRAIN. BASIN B INCLUDES THE MIDDLE PORTION OF THE SITE INCLUDING THE TWO BUILDINGS. RUNOFF FRO THE BUILDINGS WILL BE COLLECTED AND DISCHARGED DIRECTLY TO THE STORM DRAIN. RUNOFF FROM THE PAVEMENT WILL DRAIN TO A STORM INLET LOCATED BETWEEN THE OFFICE BUILDING AND FUELING STATION. A TOTAL OF 3.94 CFS WILL BE COLLECTED BY THE STORM INLET AND DISCHARGED TO A 12 INCH STORM DRAIN. THE 12 INCH STORM DRAIN CONNECTS TO THE 18 INCH STORM DRAIN THAT RUNS BETWEEN THE OFFICE BUILDING AND THE TRUCK WASH. BASIN C INCLUDES THE EASTERN PORTION OF THE SITE. RUNOFF FROM THIS BASIN DRAINS TO A STORM INLET LOCATED NORTH OF THE FUELING ISLAND. A TOTAL OF 3.81 CFS WILL BE COLLECTED BY THE STORM INLET AND DISCHARGED TO AN 18 INCH STORM DRAIN. A TOTAL OF 12.39 CFS IS DISCHARGED FROM THE SITE THROUGH THE STORM DRAIN TO THE DETENTION POND. A TOTAL RUNOFF VOLUME OF 24,163 CUBIC FEET WILL DRAIN TO THE DETENTION POND.

THE DETENTION POND WILL BE EXPANDED TO HAVE A TOATL VOLUME OF 95,373 CUBIC-FEET OR 2.19 ACRE-FEET. THE DETENTION POND WILL BE DEEPENED BY 3 FEET TO A BOTTOM ELEVATION OF 5083. THE EXISTING SUMP PUMP WILL BE REMOVED AND RELOCATED TO THE BOTTOM OF THE MODIFIED POND. THE SUMP PUMP WILL DISCHARGE TO THE STORM INLET WHICH DISCHARGES TO THE STORM DRAIN IN AIRPORT ROAD. THE 100-YEAR WATER SURFACE ELEVATION IS 5089.50. THE POND WILL HAVE A DEPTH OF 6.50 FEET. SINCE THE WHOLE SITE IS FENCED THE DETENTION POND DOES NOT REQUIRE A SEPARATE FENCE.

100-YEAR HYDROLOGIC CALCULATIONS

BASIN #	AREA (acre)	LAND TREATMENT A (%)	B (%)	C (%)	D (%)	WEIGHTED E (in)	100-YEAR PRECIPITATION V (6-hr) (acre-ft)	V (6-hr) (cu-ft)	V(24-hr) (acre-ft)	V(24-hr) (cu-ft)	Q (cfs)
EXISTING CONDITIONS											
BASIN A	1.1530	0.00	0.00	72.00	28.00	1.26	0.12	5,292	0.13	5,831	3.79
BASIN B	0.9466	0.00	0.00	66.00	34.00	1.32	0.10	4,547	0.12	5,084	3.20
BASIN C	0.9280	0.00	0.00	100.00	0.00	0.99	0.08	3,335	0.08	3,335	2.66
TOTAL RUNOFF	3.03						0.30	13,174	0.33	14,250	9.66
PROPOSED CONDITIONS											
BASIN A	1.1530	0.00	9.00	9.00	82.00	1.76	0.17	7,386	0.21	8,965	4.64
BASIN B	0.9466	0.00	5.30	5.30	89.40	1.85	0.15	6,354	0.18	7,767	3.94
BASIN C	0.9280	0.00	7.00	7.00	86.00	1.81	0.14	6,099	0.17	7,431	3.81
TOTAL RUNOFF	3.03						0.46	19,839	0.55	24,163	12.39
EXCESS PRECIP.		0.44	0.67	0.99	1.97	E_I (in)					
PEAK DISCHARGE		1.29	2.03	2.87	4.37	Q_{PI} (cfs)					
									ZONE =	1	
WEIGHTED E (in) = $(E_A)(\%A) + (E_B)(\%B) + (E_C)(\%C) + (E_D)(\%D)$									$P_{6\text{-}HR}$ (in.) =	2.20	
$V_{6\text{-}HR}$ (acre-ft) = (WEIGHTED E)(AREA)/12									$P_{24\text{-}HR}$ (in.) =	2.66	
V_{10DAY} (acre-ft) = $V_{6\text{-}HR} + (A_D)(P_{10DAY} - P_{6\text{-}HR})/12$									P_{10DAY} (in.) =	3.67	
Q (cfs) = $(Q_{PA})(A_A) + (Q_{PB})(A_B) + (Q_{PC})(A_C) + (Q_{PD})(A_D)$											

AS BUILT INFORMATION
CONTRACTOR
WORK STAKED BY — DATE
INSPECTORS ACCEPTANCE BY — DATE
FIELD VERIFICATION BY — DATE
DRAWINGS CORRECTED BY — DATE
MICRO-FILM INFORMATION
RECORDED BY — DATE
NO.

BENCH MARKS

SURVEY INFORMATION
FIELD NOTES

NO.	BY	DATE

ENGINEER'S SEAL

NO.	DATE	REMARKS	BY

DESIGN
DESIGNED BY — DATE
DRAWN BY — DATE
CHECKED BY — DATE

Thompson Engineering Consultants, Inc.
tecnm@yahoo.com
P.O. BOX 65760
ALBUQUERQUE, NM 87193
PHONE: (505) 271-2199
FAX: (505) 830-9248

DUKE CITY FUELING STATION
DRAINAGE PLAN & DETAILS

DESIGN REVIEW COMMITTEE	CITY ENGINEER APPROVAL		MO./DAY/YR.	MO./DAY/YR.

City Project No.	Zone Map No.	Sheet
XXXX	K-10-Z	C-1.02

RECEIVED
JUN 27 2008
HYDROLOGY SECTION