CITY OF ALBUQUERQUE

February 12, 2007

Bruce Stidworthy, P.E.
Bohannan Huston, Inc.
7500 Jefferson NE – Courtyard 1
Albuquerque, NM 87109

Re: Project G – 7000 Central SW, Engineer's Certification Dated 2-7-07
Request for Permanent Certificate of Occupancy, CPN 6631.91

Dear Mr. Stidworthy,

Based upon the information provided in your Drainage Certification received on February 8, 2007, the above referenced plan is approved for release of Permanent Certificate of Occupancy by Hydrology.

If you have any questions, you can contact me at 924-3990.

Sincerely,

Jeremy Hoover, P.E.
Senior Engineer
Hydrology Section
Development and Building Services

cc: file K10/D36
Katrina Sigala, CO Clerk

P.O. Box 1293
Albuquerque
New Mexico 87103

www.cabq.gov

DRAINAGE AND TRANSPORTATION INFORMATION SHEET

(REV. 1/28/2003rd)

K-10/D36

PROJECT TITLE: PROJECT G (Verizon Call Center) ZONE MAP/DRG. FILE # K10/D36

DRB #: 1000494 EPC#: 00128 00000 00588 WORK ORDER#:

LEGAL DESCRIPTION: Tracts A-1, C-1, D-1, and F-1 Coors Plaza together with a northerly portion of Tract 60 Town of Atrisco Grant Unit 6

CITY ADDRESS: Coors Boulevard and Central Avenue; Albuquerque, New Mexico

ENGINEERING FIRM: Bohannan Huston, Inc. CONTACT: Bruce Stidworthy
ADDRESS: 7500 Jefferson NE – Courtyard I PHONE: (505) 823-1000
CITY, STATE: Albuquerque, NM ZIP CODE: 87109

OWNER: CONTACT:
ADDRESS: PHONE:
CITY, STATE: ZIP CODE:

ARCHITECT: SPACE CONTACT: Morrie Spang
ADDRESS: 120 West Wieuca Road, Suite 106 PHONE: (404) 847-0422
CITY, STATE: Atlanta, GA ZIP CODE: 30342

SURVEYOR: CONTACT:
ADDRESS: PHONE:
CITY, STATE: ZIP CODE:

CONTRACTOR: CONTACT:
ADDRESS: PHONE:
CITY, STATE: ZIP CODE:

CHECK TYPE OF SUBMITTAL:

- ____ DRAINAGE REPORT
- ____ DRAINAGE PLAN 1st SUBMITTAL, ***REQUIRES TCL or equal***
- ____ DRAINAGE PLAN RESUBMITTAL
- ____ CONCEPTUAL GRADING & DRAINAGE PLAN
- ____ GRADING PLAN
- ____ EROSION CONTROL PLAN
- X ENGINEER'S CERTIFICATION (HYDROLOGY)
- ____ CLOMR/LOMR
- ____ TRAFFIC CIRCULATION LAYOUT (TCL)
- ____ ENGINEERS CERTIFICATION (TCL)
- X ENGINEERS CERTIFICATION (DRB APPR. SITE PLAN)
- ____ OTHER

CHECK TYPE OF APPROVAL SOUGHT:

- ____ SIA / FINANCIAL GUARANTEE RELEASE
- ____ PRELIMINARY PLAT APPROVAL
- ____ S. DEV. PLAN FOR SUB'D. APPROVAL
- ____ S. DEV. PLAN FOR BLDG. PERMIT APPROVAL
- ____ SECTOR PLAN APPROVAL
- ____ FINAL PLAT APPROVAL
- ____ FOUNDATION PERMIT APPROVAL
- ____ BUILDING PERMIT APPROVAL
- X CERTIFICATE OF OCCUPANCY (PERM.)
- ____ CERTIFICATE OF OCCUPANCY (TEMP.)
- ____ GRADING PERMIT APPROVAL
- ____ PAVING PERMIT APPROVAL
- ____ WORK ORDER APPROVAL
- ____ OTHER (SPECIFY)

WAS A PRE-DESIGN CONFERENCE ATTENDED:

- ____ YES
- X NO
- ____ COPY PROVIDED

RECEIVED
FEB 08 2007
HYDROLOGY SECTION

DATE SUBMITTED: February 8, 2007 BY: Bruce Stidworthy

Requests for approvals of Site Development Plans and/or Subdivision Plats shall be accompanied by a drainage submittal. The particular nature , location and scope of the proposed development defines the degree of drainage detail. One or more of the following levels of submittal may be required based on the following:

1. **Conceptual Grading and Drainage Plan:** Required for approval of Site Development Plans greater than five (5) acres and Sector Plans.
2. **Drainage Plans:** Required for building permits, grading permits, paving permits and site plans less than five (5) acres.
3. **Drainage Report:** Required for subdivisions containing more than ten (10) lots or constituting five (5) acres or more.

CITY OF ALBUQUERQUE

Planning Department
Transportation Development Services Section

February 9, 2007

Bruce J. Stidworthy, PE
7500 Jefferson Ne, Coutyard I
Albuquerque, NM 87109

Re: Certification Submittal for Final Building Certificate of Occupancy for Project G, [K-10 / D36]
7000 Central Sw
Engineer's Stamp Dated 02/07/07

Dear Mr. Stidworthy:

The TCL / Letter of Certification submitted on February 8, 2007 is sufficient for acceptance by this office for final Certificate of Occupancy (C.O.). Notification has been made to the Building and Safety Section.

Sincerely,

Nilo E. Salgado-Fernandez, P.E.
Senior Traffic Engineer
Development and Building Services
Planning Department

c: Engineer
Hydrology file
CO Clerk

P.O. Box 1293
Albuquerque
New Mexico 87103
www.cabq.gov

Bohannan ▲ Huston INC.

Courtyard I
7500 Jefferson St. NE
Albuquerque, NM
87109-4335
www.bhinc.com
voice: 505.823.1000
facsimile: 505.798.7988
toll free: 800.877.5332

CLIENT/COURIER TRANSMITTAL

To: Brad Bingham
City of Albuquerque
600 Second Street NW, 2nd Floor West

Requested by: Bruce Stidworthy/cc

Date: February 8, 2007

Time Due:
- ☒ This A.M.
- ☐ This P.M.
- ☐ Rush _____
- ☐ By Tomorrow

Phone: 924-3986

Job No.: 060151

Job Name: Project G

DELIVERY VIA

- ☒ Courier
- ☐ Federal Express
- ☐ Mail
- ☐ UPS
- ☐ Other

PICK UP

Item: _____

ITEM NO.	QUANTITY	DESCRIPTION
1	1	Drainage Info Sheet
2	1	Amended Site Development Plan
3	2	Drainage Certification

COMMENTS / INSTRUCTIONS

RECEIVED
FEB 08 2007
HYDROLOGY SECTION

*REC'D BY:*_____ *DATE:*_____ *TIME:*_____

ENGINEERING ▲
SPATIAL DATA ▲
ADVANCED TECHNOLOGIES ▲

CITY OF ALBUQUERQUE

October 19, 2006

Mr. Bruce Stidworthy, PE
BOHANNAN-HUSTON, INC.
7500 Jefferson St. NE – Courtyard 1
Albuquerque, NM 87109

Re: PROJECT G
7000 Central Avenue SW
Approval of Permanent Certificate of Occupancy (C.O.)
Engineer's Stamp dated 12/29/2006 (K-10/D036)
Certification dated 10/18/2006

Dear Bruce:

P.O. Box 1293
Albuquerque
New Mexico 87103
www.cabq.gov

Based upon the information provided in your submittal received 10/19/2006, the above referenced certification is approved for release of 30-day Temporary Certificate of Occupancy by Hydrology.

Upon completion of the exceptions listed in your Drainage Certification, please resubmit an updated certification for Permanent C.O.

If you have any questions, you can contact me at 924-3982.

Sincerely,

Arlene V. Portillo

Arlene V. Portillo
Plan Checker, Planning Dept. - Hydrology
Development and Building Services

C: CO Clerk
File

Permission to extend temp CO to Jan 15, 2007 is granted

12/15/06

Kristal D Metro

DRAINAGE AND TRANSPORTATION INFORMATION SHEET
(REV. 1/28/2003rd)

PROJECT TITLE: PROJECT G ZONE MAP/DRG. FILE # K10/D36

DRB #: 1000494 EPC#: 00128 00000 00588 WORK ORDER#:

LEGAL DESCRIPTION: Tracts A-1, C-1, D-1, and F-1 Coors Plaza together with a northerly portion of Tract 60 Town of Atrisco Grant Unit 6

CITY ADDRESS: Coors Boulevard and Central Avenue; Albuquerque, New Mexico

ENGINEERING FIRM: Bohannan Huston, Inc. CONTACT:
ADDRESS: 7500 Jefferson NE – Courtyard I PHONE: (505) 823-1000
CITY, STATE: Albuquerque, NM ZIP CODE: 87109

OWNER: CONTACT:
ADDRESS: PHONE:
CITY, STATE: ZIP CODE:

ARCHITECT: SPACE CONTACT: Morrie Spang
ADDRESS: 120 West Wieuca Road, Suite 106 PHONE: (404) 847-0422
CITY, STATE: Atlanta, GA ZIP CODE: 30342

SURVEYOR: CONTACT:
ADDRESS: PHONE:
CITY, STATE: ZIP CODE:

CONTRACTOR: CONTACT:
ADDRESS: PHONE:
CITY, STATE: ZIP CODE:

CHECK TYPE OF SUBMITTAL:

____ DRAINAGE REPORT
____ DRAINAGE PLAN 1st SUBMITTAL, ***REQUIRES TCL or equal***
____ DRAINAGE PLAN RESUBMITTAL
____ CONCEPTUAL GRADING & DRAINAGE PLAN
____ GRADING PLAN
____ EROSION CONTROL PLAN
X ENGINEER'S CERTIFICATION (HYDROLOGY)
____ CLOMR/LOMR
____ TRAFFIC CIRCULATION LAYOUT (TCL)
____ ENGINEERS CERTIFICATION (TCL)
____ ENGINEERS CERTIFICATION (DRB APPR. SITE PLAN)
____ OTHER

CHECK TYPE OF APPROVAL SOUGHT:

____ SIA / FINANCIAL GUARANTEE RELEASE
____ PRELIMINARY PLAT APPROVAL
____ S. DEV. PLAN FOR SUB'D. APPROVAL
____ S. DEV. PLAN FOR BLDG. PERMIT APPROVAL
____ SECTOR PLAN APPROVAL
____ FINAL PLAT APPROVAL
____ FOUNDATION PERMIT APPROVAL
____ BUILDING PERMIT APPROVAL
____ CERTIFICATE OF OCCUPANCY (PERM.)
X CERTIFICATE OF OCCUPANCY (TEMP.)
____ GRADING PERMIT APPROVAL
____ PAVING PERMIT APPROVAL
____ WORK ORDER APPROVAL
____ OTHER (SPECIFY)

WAS A PRE-DESIGN CONFERENCE ATTENDED:

____ YES
X NO
____ COPY PROVIDED

RECEIVED
OCT 19 2006
HYDROLOGY SECTION

DATE SUBMITTED: October 18, 2006 BY: Bruce Stidworthy

Requests for approvals of Site Development Plans and/or Subdivision Plats shall be accompanied by a drainage submittal. The particular nature , location and scope of the proposed development defines the degree of drainage detail. One or more of the following levels of submittal may be required based on the following:

1. **Conceptual Grading and Drainage Plan:** Required for approval of Site Development Plans greater than five (5) acres and Sector Plans.
2. **Drainage Plans:** Required for building permits, grading permits, paving permits and site plans less than five (5) acres.
3. **Drainage Report:** Required for subdivisions containing more than ten (10) lots or constituting five (5) acres or more.

Bohannan ▲ Huston INC.

Courtyard I
7500 Jefferson St. NE
Albuquerque, NM
87109-4335
www.bhinc.com
voice: 505.823.1000
facsimile: 505.798.7988
toll free: 800.877.5332

CLIENT/COURIER TRANSMITTAL

To: Brad Bingham
City of Albuquerque
600 Second Street NW, 2nd Floor West

Requested by: Bruce Stidworthy

Date: October 19, 2006

Time Due:
- ☒ **This A.M.**
- ☐ **This P.M.**
- ☐ **Rush** _____
- ☐ **By Tomorrow**

Phone: 924-3986

Job No.: 060151

Job Name: Project G

DELIVERY VIA

- ☒ **Courier**
- ☐ **Federal Express**
- ☐ **Mail**
- ☐ **UPS**
- ☐ **Other**

PICK UP

Item: _____

ITEM NO.	QUANTITY	DESCRIPTION
1	1	Drainage Info Sheet
2	1	COA letter for Building Permit
3	1	Drainage Certification

COMMENTS / INSTRUCTIONS

RECEIVED
OCT 19 2006
HYDROLOGY SECTION

ENGINEERING ▲
SPATIAL DATA ▲
ADVANCED TECHNOLOGIES ▲

REC'D BY: _____ ***DATE:*** _____ ***TIME:*** _____

CITY OF ALBUQUERQUE

File 060151 G&D

REC'D JAN 17 2006

THREE HUNDRED YEARS 1706 • 2006
ALBUQUERQUE
Making History

January 13, 2006

Bruce J. Stidworthy, P.E.
Bohannan Huston, Inc.
7500 Jefferson St. NE – Courtyard I
Albuquerque, NM 87109

Re: Project G, 7000 Central Ave. SW, Grading & Drainage Plan Engineer's Stamp dated 12-29-05 (K10-D36)

Dear Mr. Stidworthy,

Based upon the information provided in your submittal dated 12-29-05, the above referenced plan is approved for Building Permit. Please attach a copy of this approved plan to the construction sets prior to sign-off by Hydrology. Additionally, prior to release of the Certificate of Occupancy an Engineer's Certification of the grading plan per the DPM checklist will be required.

This project requires a National Pollutant Discharge Elimination System (NPDES) permit. Refer to the attachment that is provided with this letter for details. If you have any questions please feel free to call the Municipal Development Department Hydrology section at 768-3654 (Charles Caruso).

If you have any questions, you can contact me at 924-3990.

Sincerely,

Phillip J. Lovato, E.I., C.F.M.
Engineering Associate, Hydrology,
Development and Building Services,
Planning Department

RECEIVED
OCT 19 2006
HYDROLOGY SECTION

cc: Charles Caruso, DMD
file

P.O. Box 1293
Albuquerque
New Mexico 87103
www.cabq.gov

CITY OF ALBUQUERQUE

Planning Department
Transportation Development Services Section

November 6, 2006

Bruce J. Stidworthy, P.E.
Bohannan Huston Inc.
7500 Jefferson St. NE, Courtyard I
Albuquerque, NM 87109-4335

Re: Approval of Temporary Certificate of Occupancy (C.O.) for
Project G, [K-10 / D36]
7000 Central SW
Engineer's Stamp Dated 10/03/06

Dear Mr. Stidworthy:

Based on the information provided on your submittal dated November 3, 2006, the above referenced project is approved for a 30-day Temporary C.O.

A Temporary C.O. has been issued allowing the outstanding H.C. (ramp and signage) and stall striping issues to be completed within this time period. When these remaining issues have been fully completed, are in substantial compliance, and a final Certification for Transportation has been resubmitted to the City's Hydrology office for approval, a Permanent C.O. will be issued.

The Certification package for Final C.O. must include an ***exact*** copy of the approved TCL, or signed off D.R.B. Site Plan, which is in each of the two City Permit Plan Sets—the contractor's City field set and the City's plan set in the basement of the Plaza Del Sol building. Package also must include a letter of certification on designer's letterhead-stamped with his seal, signed, and dated. Submit package along with fully completed Drainage Information Sheet to front counter personnel for log in and evaluation by Transportation.

If you have any questions, please call me at 924-3630.

Sincerely,

Nilo E. Salgado-Fernandez, P.E.
Senior Traffic Engineer
Development and Building Services
Planning Department

Permission to extend temp C.O
15 Jan 06
NSF

c: Engineer
Hydrology file
CO Clerk

P.O. Box 1293
Albuquerque
New Mexico 87103
www.cabq.gov

K-10/D36

DRAINAGE AND TRANSPORTATION INFORMATION SHEET

(REV. 1/28/2003rd)

RECEIVED NOV 03 2006 HYDROLOGY SECTION

PROJECT TITLE: PROJECT G ZONE MAP/DRG FILE #: K10/D36

DRB #: 1000494 EPC#: 00128 00000 00588 WORK ORDER#:

LEGAL DESCRIPTION: Tracts A-1, C-1, D-1, and F-1 Coors Plaza together with a northerly portion of Tract 60 Town of Atrisco Grant Unit 6

CITY ADDRESS: Coors Boulevard and Central Avenue; Albuquerque, New Mexico

ENGINEERING FIRM: Bohannan Huston, Inc. CONTACT:
ADDRESS: 7500 Jefferson NE – Courtyard I PHONE: (505) 823-1000
CITY, STATE: Albuquerque, NM ZIP CODE: 87109

OWNER: CONTACT:
ADDRESS: PHONE:
CITY, STATE: ZIP CODE:

ARCHITECT: SPACE CONTACT: Morrie Spang
ADDRESS: 120 West Wieuca Road, Suite 106 PHONE: (404) 847-0422
CITY, STATE: Atlanta, GA ZIP CODE: 30342

SURVEYOR: CONTACT:
ADDRESS: PHONE:
CITY, STATE: ZIP CODE:

CONTRACTOR: CONTACT:
ADDRESS: PHONE:
CITY, STATE: ZIP CODE:

CHECK TYPE OF SUBMITTAL:

____ DRAINAGE REPORT
____ DRAINAGE PLAN 1st SUBMITTAL, ***REQUIRES TCL or equal***
____ DRAINAGE PLAN RESUBMITTAL
____ CONCEPTUAL GRADING & DRAINAGE PLAN
____ GRADING PLAN
____ EROSION CONTROL PLAN
____ ENGINEER'S CERTIFICATION (HYDROLOGY)
____ CLOMR/LOMR
____ TRAFFIC CIRCULATION LAYOUT (TCL)
X ENGINEERS CERTIFICATION (~~TCL~~) (AA)
____ ENGINEERS CERTIFICATION (DRB APPR. SITE PLAN)
____ OTHER

CHECK TYPE OF APPROVAL SOUGHT:

____ SIA / FINANCIAL GUARANTEE RELEASE
____ PRELIMINARY PLAT APPROVAL
____ S. DEV. PLAN FOR SUB'D. APPROVAL
____ S. DEV. PLAN FOR BLDG. PERMIT APPROVAL
____ SECTOR PLAN APPROVAL
____ FINAL PLAT APPROVAL
____ FOUNDATION PERMIT APPROVAL
____ BUILDING PERMIT APPROVAL
____ CERTIFICATE OF OCCUPANCY (PERM.)
X CERTIFICATE OF OCCUPANCY (TEMP.)
____ GRADING PERMIT APPROVAL
____ PAVING PERMIT APPROVAL
____ WORK ORDER APPROVAL
____ OTHER (SPECIFY)

WAS A PRE-DESIGN CONFERENCE ATTENDED:

____ YES
X NO
____ COPY PROVIDED

DATE SUBMITTED: October 18, 2006 BY: Bruce Stidworthy

Requests for approvals of Site Development Plans and/or Subdivision Plats shall be accompanied by a drainage submittal. The particular nature , location and scope of the proposed development defines the degree of drainage detail. One or more of the following levels of submittal may be required based on the following:

1. Conceptual Grading and Drainage Plan: Required for approval of Site Development Plans greater than five (5) acres and Sector Plans.

2. Drainage Plans: Required for building permits, grading permits, paving permits and site plans less than five (5) acres.

3. Drainage Report: Required for subdivisions containing more than ten (10) lots or constituting five (5) acres or more.

Bohannan ▲ Huston INC.

Courtyard I
7500 Jefferson St. NE
Albuquerque, NM
87109-4335
www.bhinc.com
voice: 505.823.1000
facsimile: 505.798.7988
toll free: 800.877.5332

CLIENT/COURIER TRANSMITTAL

To: Richard Dineen
Plaza Del Sol
3rd Floor

Requested by: Paul Wymer/ SW

Date: 11/3/2006

Time Due:
- ☒ This A.M.
- ☐ This P.M.
- ☐ Rush _____
- ☐ By Tomorrow

Phone:

Job No.: DRB# 1000494

Job Name: Project G .

DELIVERY VIA

- ☐ Courier
- ☐ Federal Express
- ☐ Mail
- ☐ UPS
- ☒ Other

PICK UP

Item: _____

ITEM NO.	QUANTITY	DESCRIPTION
1	1	TCL

COMMENTS / INSTRUCTIONS

*REC'D BY:*_____ *DATE:*_____ *TIME:*_____

ENGINEERING ▲
SPATIAL DATA ▲
ADVANCED TECHNOLOGIES ▲

"Paul Wymer"
<Pwymer@bhinc.com>
11/02/2006 04:13 PM

To <rdineen@cabq.gov>
cc "Bruce Stidworthy" <bstidwor@bhinc.com>, <RDourte@cabq.gov>, <RBrito@cabq.gov>, "Stephanie Walton" <swalton@bhinc.com>
bcc
Subject Project G (Verizon) Traffic Circulation Layout (TCL) Engineer's Certification

Hi Richard,

We will be submitting the project Traffic Circulation Layout (TCL) Engineer's Certification to you tomorrow. We are sending it to you so you can make sure it gets to the correct COA staff reviewer.

Let me know if I can be of any assistance in this and thanks for your help.

Paul M. Wymer, AIA
Project Manager
Bohannan Huston, Inc.
(505) 823-1000
Direct Dial: (505) 798-7895
E-mail: pwymer@bhinc.com

Russell -
Call me on
this please.

TY
(43936)

CITY OF ALBUQUERQUE

THREE HUNDRED YEARS 1706 • 2006
ALBUQUERQUE
Making History

January 13, 2006

Bruce J. Stidworthy, P.E.
Bohannan Huston, Inc.
7500 Jefferson St. NE – Courtyard I
Albuquerque, NM 87109

Re: Project G, 7000 Central Ave. SW, Grading & Drainage Plan Engineer's Stamp dated 12-29-05 (K10-D36)

Dear Mr. Stidworthy,

Based upon the information provided in your submittal dated 12-29-05, the above referenced plan is approved for Building Permit. Please attach a copy of this approved plan to the construction sets prior to sign-off by Hydrology. Additionally, prior to release of the Certificate of Occupancy an Engineer's Certification of the grading plan per the DPM checklist will be required.

This project requires a National Pollutant Discharge Elimination System (NPDES) permit. Refer to the attachment that is provided with this letter for details. If you have any questions please feel free to call the Municipal Development Department Hydrology section at 768-3654 (Charles Caruso).

If you have any questions, you can contact me at 924-3990.

Sincerely,

Phillip J. Lovato, E.I., C.F.M.
Engineering Associate, Hydrology,
Development and Building Services,
Planning Department

cc: Charles Caruso, DMD
file

P.O. Box 1293
Albuquerque
New Mexico 87103
www.cabq.gov

DRAINAGE AND TRANSPORTATION INFORMATION SHEET
(REV. 1/28/2003rd)

PROJECT TITLE: PROJECT G ZONE MAP/DRG. FILE # K10/036

DRB #: 1000494 EPC#: 00128 00000 00588 WORK ORDER#:

LEGAL DESCRIPTION: Tracts A-1, C-1, D-1, and F-1 Coors Plaza together with a northerly portion of Tract 60 Town of Atrisco Grant Unit 6

7000 ~~[illegible]~~ CENTRAL AVE SW

CITY ADDRESS: Coors Boulevard and Central Avenue; Albuquerque, New Mexico

ENGINEERING FIRM: Bohannan Huston, Inc. CONTACT:
ADDRESS: 7500 Jefferson NE – Courtyard I PHONE: (505) 823-1000
CITY, STATE: Albuquerque, NM ZIP CODE: 87109

OWNER: CONTACT:
ADDRESS: PHONE:
CITY, STATE: ZIP CODE:

ARCHITECT: SPACE CONTACT: Morrie Spang
ADDRESS: 120 West Wieuca Road, Suite 106 PHONE: (404) 847-0422
CITY, STATE: Atlanta, GA ZIP CODE: 30342

SURVEYOR: CONTACT:
ADDRESS: PHONE:
CITY, STATE: ZIP CODE:

CONTRACTOR: CONTACT:
ADDRESS: PHONE:
CITY, STATE: ZIP CODE:

CHECK TYPE OF SUBMITTAL:

____ DRAINAGE REPORT
X DRAINAGE PLAN 1st SUBMITTAL, ***REQUIRES TCL or equal***
X DRAINAGE PLAN RESUBMITTAL
____ CONCEPTUAL GRADING & DRAINAGE PLAN
____ GRADING PLAN
____ EROSION CONTROL PLAN
____ ENGINEER'S CERTIFICATION (HYDROLOGY)
____ CLOMR/LOMR
____ TRAFFIC CIRCULATION LAYOUT (TCL)
____ ENGINEERS CERTIFICATION (TCL)
____ ENGINEERS CERTIFICATION (DRB APPR. SITE PLAN)
____ OTHER

CHECK TYPE OF APPROVAL SOUGHT:

____ SIA / FINANCIAL GUARANTEE RELEASE
____ PRELIMINARY PLAT APPROVAL
____ S. DEV. PLAN FOR SUB'D. APPROVAL
____ S. DEV. PLAN FOR BLDG. PERMIT APPROVAL
____ SECTOR PLAN APPROVAL
____ FINAL PLAT APPROVAL
____ FOUNDATION PERMIT APPROVAL
X BUILDING PERMIT APPROVAL
____ CERTIFICATE OF OCCUPANCY (PERM.)
____ CERTIFICATE OF OCCUPANCY (TEMP.)
X GRADING PERMIT APPROVAL
____ PAVING PERMIT APPROVAL
____ WORK ORDER APPROVAL
____ OTHER (SPECIFY)

WAS A PRE-DESIGN CONFERENCE ATTENDED:

____ YES
X NO
____ COPY PROVIDED

RECEIVED
DEC 29 2005
HYDROLOGY SECTION

DATE SUBMITTED: December 29, 2005 BY: Rudy Armijo

Requests for approvals of Site Development Plans and/or Subdivision Plats shall be accompanied by a drainage submittal. The particular nature , location and scope of the proposed development defines the degree of drainage detail. One or more of the following levels of submittal may be required based on the following:

1. **Conceptual Grading and Drainage Plan:** Required for approval of Site Development Plans greater than five (5) acres and Sector Plans.
2. **Drainage Plans:** Required for building permits, grading permits, paving permits and site plans less than five (5) acres.
3. **Drainage Report:** Required for subdivisions containing more than ten (10) lots or constituting five (5) acres or more.

Bohannan ▲ Huston INC.

Courtyard I
7500 Jefferson St. NE
Albuquerque, NM
87109-4335
www.bhinc.com
voice: 505.823.1000
facsimile: 505.798.7988
toll free: 800.877.5332

CLIENT/COURIER TRANSMITTAL

To: Brad Bingham
City Hydrology
600 Second Street NW, 2nd Floor West

Requested by: Bruce Stidworthy

Date: December 29, 2005

Time Due:
- ☐ **This A.M.**
- ☐ **This P.M.**
- ☐ **Rush** _____
- ☐ **By Tomorrow**

Phone: 924-3986

Job No.: 060151

Job Name: Project G

DELIVERY VIA

- ☒ Courier
- ☐ Federal Express
- ☐ Mail
- ☐ UPS
- ☐ Other

PICK UP

Item: _____

ITEM NO.	QUANTITY	DESCRIPTION
1	1	Grading and Drainage Plans Engineer's Stamp Dated 12-29-05 for Building Permit Approval

COMMENTS / INSTRUCTIONS

REC'D BY: Sandy Handley DATE: 12/29/05 TIME: 11/08

ENGINEERING ▲
SPATIAL DATA ▲
ADVANCED TECHNOLOGIES ▲

DEVELOPMENT & BUILDING SERVICE CENTER
ONE STOP SHOP
600 SECOND ST. N.W.
ATTENTION: Arlene
505-924-3900

Records Withdrawal Form

Project No. K-10/D36 **Date:** 11/10/05

Project Title: KMART- COORS AND CENTRAL

a. File b. Mylars c. Redlines/Comments
d. Other _____

Requested by: Connie Chapin Bohannan Huston **Phone No.:** 823-1000
Name and Company

Comments:

_____

_____

_____

Anticipated Return Date: _____

I hereby accept full responsibility for the security of the above noted records/plans until return receipt acknowledgement is completed. Records/plans will be returned to the Development and Building Services Center on or before the indicted anticipated return date.

Delivery Picked Up By:

Name: Frank Romero **Organization:** Albuquerque Repro
Print

Signed: Frank Romero **Date:** 11-14-05

Office Use Only

COPY - ORIGINAL FILED

Return Acknowledged:

Received By: SANDY HANDLEY **Date:** 11/15/05
Print

GREAT BASIN ENGINEERING - South

2010 North Redwood Road • P.O. Box 16747 • Salt Lake City, Utah 84116
(801) 521-8529 • (801) 394-7288 • Fax (801) 521-9551

CONSULTING ENGINEERS
AND LAND SURVEYORS

September 25, 2001

Carlos A. Montoya
Flood Plain Administrator
City of Albuquerque
600 2nd Street NW
Albuquerque, NM 87102

Re: Kmart – Coors & Central

Dear Carlos,

As you may be aware the site for the K-mart on Coors & Central has changed slightly. As part of the changes we analyzed the modified site and compared it to the storm water study, which was previously approved. The attached table indicates the peak flows from each area. The areas, which are bold are the only ones that changed. The amount of the change is indicated to the right in parentheses.

Area	Peak Flow (cfs)
A1	6
A2	11
A3	5
A4	5
A5	5
A6	8
A7	4
A8	4
A9	3
A10	3
A11	9
A12	2
A13	9
A14	**1 (-1)**
A15	6
A16	3
B1	**4 (-1)**
B2	11
OFF1	3
OFF2	6
OFF3	4

Peak inflow into Pond A is 73 cfs with a max stage of 87.1. This is 1 cfs less than the original report and 0.1 feet lower at max stage than the original report. Peak inflow into Pond B is 14 cfs with a max stage of 81.4. This is 1 cfs less than the original report and 0.1 feet lower at max stage than the original report. The utility plans have also been modified slightly, however the storm drain pipe sizes, slopes, and lengths have remained virtually unchanged. As such we feel that these changes in flow do not represent a need to re-evaluate the hydraulic analysis of the storm drain system.

Should you have any questions or concerns please do not hesitate to contact me.

Sincerely,

Bret Wahlen P.E.
Vice President

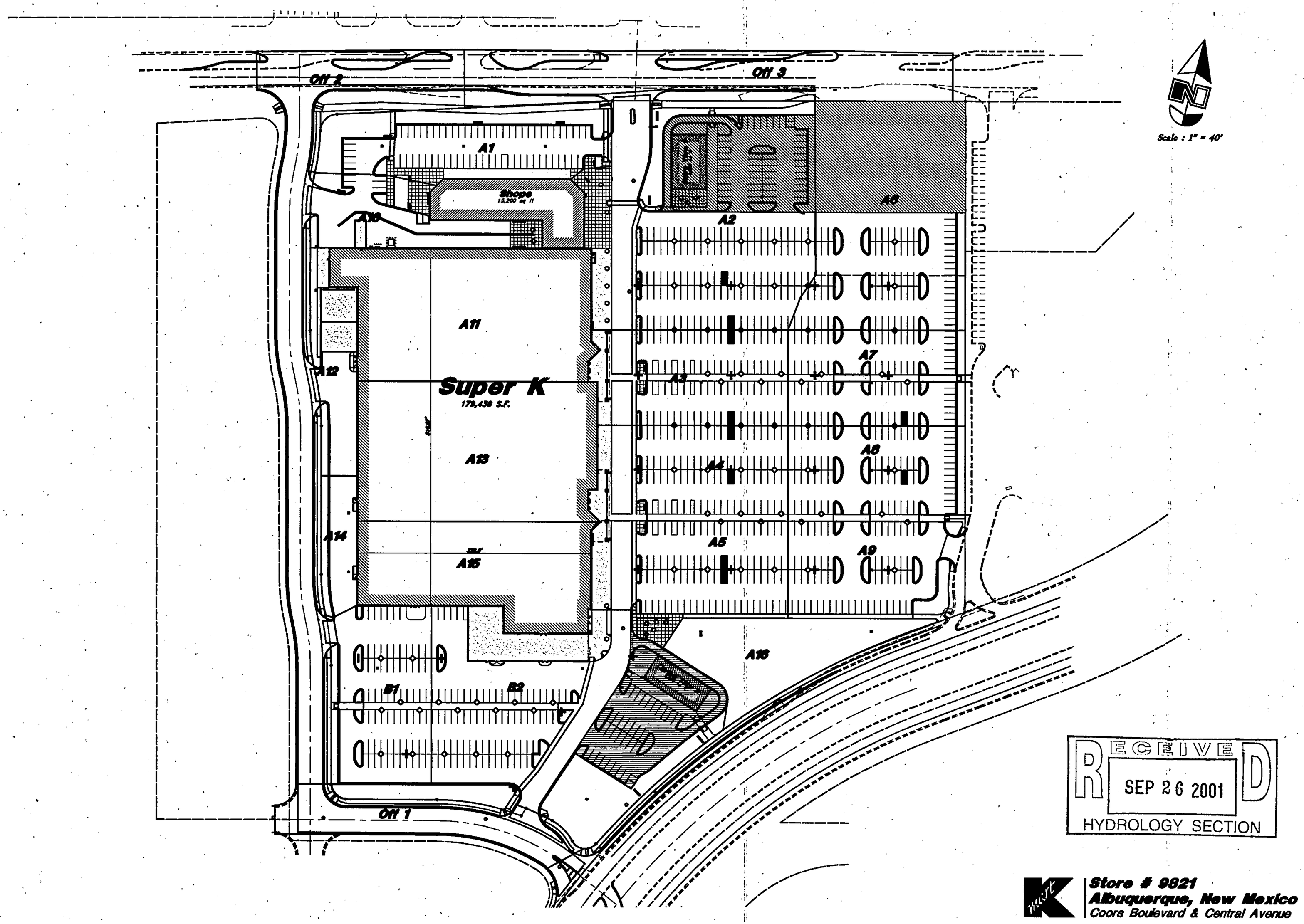

RECEIVED
SEP 26 2001
HYDROLOGY SECTION

Store # 9821
Albuquerque, New Mexico
Coors Boulevard & Central Avenue

REV. | DATE | DESCRIPTION

GREAT BASIN ENGINEERING - SOUTH
CONSULTING ENGINEERS and LAND SURVEYORS
2010 North Redwood Road, P.O. Box 16747
Salt Lake City, Utah 84116
Salt Lake City (801)531-8529 Ogden (801)394-7288 Fax (801)531-8551

Figure 2

Coors Plaza
Coors Boulevard and Central Avenue
Albuquerque, New Mexico

17 Sep, 2001

SHEET NO.

Storm Water Study
Kmart – Coors Boulevard and Central Avenue
Albuquerque, New Mexico

Revised: July 2001

Prepared For:
MS Development
12626 High Bluff Road, Suite 330
San Diego, California 92130

CONSULTING ENGINEERS &
LAND SURVEYORS

GREAT BASIN ENGINEERING - South

2010 North Redwood Road • P.O. Box 16747 • Salt Lake City, Utah 84116
(801) 521-8529 • (801) 394-7288 • Fax (801) 521-9551 • E-mail gbes@xmission.com

GREAT BASIN ENGINEERING - South

2010 North Redwood Road • P.O. Box 16747 • Salt Lake City, Utah 84116
(801) 521-8529 • (801) 394-7288 • Fax (801) 521-9551

CONSULTING ENGINEERS
AND LAND SURVEYORS

July 9, 2001

Carlos Montoya, P.E.
Floodplain Administrator
600 2nd Street NW
Albuquerque, NM 87102

RE: Kmart – Coors & Central Storm Water Analysis

Dear Carlos,

We are pleased to submit for your review the storm water analysis conducted on the K-mart site on Coors and Central. The site plan for this project has changed since the plans were last submitted. Due to these changes it was necessary to re-evaluate the drainage. Also, as was discussed with you on the phone, in order to fully address your comments about water surface elevations in a 100-year storm we used HEC-1 to analyze the storm water on the site. Details of our analysis are more fully contained in the report itself. Please don't hesitate to contact us with any questions or comments.

Sincerely,

Bret G. Wahlen, P.E.
Vice President

RECEIVED
JUL 09 2001
HYDROLOGY SECTION

City of Albuquerque
P.O. BOX 1293 ALBUQUERQUE, NEW MEXICO 87103

July 23, 2001

Bret Wahlen
Great Basin Engineering
2010 North Redland Road
P.O. Box 16747
Salt Lake City, Utah 84116

RE: Grading and Drainage Plan for Central K-Mart (K10-D36) Dated July ~~6~~ 5, 2001

Dear Mr. Wahlen:

The above referenced drainage plan received July 9, 2001 is approved for amending of the Site Plan and for Building Permit. Upon completion of the project the design engineer needs to certify the project prior to release of the Certificate of Occupancy.

If you have any questions please call me a 924-3982.

Sincerely,

Carlos A. Montoya
City/County Floodplain Administrator

THE CITY OF ALBUQUERQUE IS AN EQUAL OPPORTUNITY/REASONABLE ACCOMMODATION EMPLOYER

DRAINAGE INFORMATION SHEET

K-Mart - Coors + Central

PROJECT TITLE: Coors Plaza ZONE MAP/DRG. FILE #: K10/D36
DRB #: 1000494 EPC#: 00128 00000 00588 WORK ORDER#: 663381

LEGAL DESCRIPTION: Lots 57, 58, 59, Part of Lot 60 and Lot B; Town of Atrisco, Unit 6
CITY ADDRESS:

ENGINEERING FIRM: Great Basin Engineering - South
ADDRESS: 2010 North Redwood Rd
CITY, STATE: Salt Lake City, Ut.
CONTACT: Bret Wahlen
PHONE: 801-521-8529
ZIP CODE: 84116

OWNER: Coors & Central Partners, LLC
ADDRESS: 12626 High Bluff Dr. Ste 330
CITY, STATE: San Diego, CA
CONTACT: Paul Pietsch
PHONE: 858-259-3117 #11
ZIP CODE: 92130

ARCHITECT: Deutsch Associates
ADDRESS: 2929 North 44th St. Ste 320
CITY, STATE: Phoenix, AZ
CONTACT: Leo Marin
PHONE: 602-840-2929
ZIP CODE: 85018

SURVEYOR: Surv-Tek, Inc.
ADDRESS 5645 Paradise Blvd. NW
CITY, STATE: Albuquerque, NM
CONTACT: Russ Hugg
PHONE: 505-897-3366
ZIP CODE: 87114

CONTRACTOR:
ADDRESS:
CITY, STATE:
CONTACT:
PHONE:
ZIP CODE:

TYPE OF SUBMITTAL:
- X DRAINAGE REPORT
- X DRAINAGE PLAN
- ___ CONCEPTUAL GRADING & DRAINAGE PLAN
- ___ GRADING PLAN
- ___ EROSION CONTROL PLAN
- ___ ENGINEER'S CERTIFICATION
- ___ CLOMR/LOMR
- ___ OTHER

WAS A PRE-DESIGN CONFERENCE ATTENDED:
- ___ YES
- ___ NO
- ___ COPY PROVIDED

CHECK TYPE OF APPROVAL SOUGHT:
- ___ SIA / FINANCIAL GUARANTEE RELEASE
- ___ PRELIMINARY PLAT APPROVAL
- X S. DEV. PLAN FOR SUB'D. APPROVAL
- X S. DEV. PLAN FOR BLDG. PERMIT APPROVAL
- ___ SECTOR PLAN APPROVAL
- ___ FINAL PLAT APPROVAL
- ___ FOUNDATION PERMIT APPROVAL
- ___ BUILDING PERMIT APPROVAL
- ___ CERTIFICATE OF OCCUPANCY APPROVAL
- X GRADING PERMIT APPROVAL
- ___ PAVING PERMIT APPROVAL
- ___ WORK ORDER APPROVAL
- ___ OTHER (SPECIFY)

Amd

RECEIVED
JUL 09 2001
HYDROLOGY SECTION

DATE SUBMITTED: 7-9-01 BY: Great Basin Eng.

Requests for approvals of Site Development Plans and/or Subdivision Plats shall be accompanied by a drainage submittal. The particular nature , location and scope ot the proposed development defines the degree of drainage detail. One or more of the following levels of submittal may be required based on the following:

1. **Conceptual Grading and Drainage Plan**: Required for approval of Site Development Plans greater than five (5) acres and Sector Plans.
2. **Drainage Plans**: Required for building permits, grading permits, paving permits and site plans less than five (5) acres.
3. **Drainage Report**: Required for subdivisions containing more than ten (10) lots or constituting five (5) acres or more.

Storm Water Study
Kmart – Coors Boulevard and Central Avenue
Albuquerque, New Mexico

Revised: July 2001

RECEIVED
JUL 05 2001
HYDROLOGY SECTION

Prepared For:
MS Development
12626 High Bluff Road, Suite 330
San Diego, California 92130

CONSULTING ENGINEERS &
LAND SURVEYORS

GREAT BASIN ENGINEERING - South
2010 North Redwood Road • P.O. Box 16747 • Salt Lake City, Utah 84116
(801) 521-8529 • (801) 394-7288 • Fax (801) 521-9551 • E-mail gbes@xmission.com

TABLE OF CONTENTS

Introduction 1

Purpose 1

Existing Conditions 1

Hydrologic Analysis 1

Vicinity Map / FEMA Map 2

Proposed Conditions 3

Site Map 4

Conclusions 6

References 6

Map Pocket
Grading and Drainage Plan
Erosion Control Plan and Storm Water Pollution Prevention

Appendix A
Hydrographs – Ponds A & B
Storm Drain Hydraulic Calculations – HGL's

Appendix B
HEC-1 Model

Appendix C
Referenced Studies

I. Introduction

MS Development is proposing developing a commercial site between Coors Boulevard and Central Avenue (See Figure 1). This site will contain a Kmart as the anchor, retail shops, and freestanding pads. A storm water study was previously completed and approved by the City on this site. However, since that time a new site plan has been developed which required a new study. This study is based on the new site plan and also uses HEC-1 to identify the effects of routing on the system and to establish high-water elevations in the ponds and parking areas where applicable.

II. Purpose

The purpose of this report is to verify floodplain information, review the existing drainage patterns of the site and develop and propose a grading and drainage plan that will be consistent with development of surrounding properties and the existing storm drain system.

III. Existing Conditions

The 20-acre site is bound on the north by Central Avenue, an existing Albertson's shopping center to the east, Coors Boulevard to the south, and undeveloped properties to the west. There is an existing motel at the northeast corner of the site, which will remain. Airport Road currently runs through the middle of the site, which will be closed and relocated, to the west edge of the development.

The site is relatively level, sloping from north to south at roughly 1%. Vegetative cover is consistent with west side property and consists of sandy soils. The site currently drains overland from north to south onto Coors Boulevard where storm water is collected by inlets. Airport road drains from north to south with an existing inlet on the south end of Airport Road. This inlet is tied into an existing 48" storm drain in Airport Road.

The Master Drainage Plan for the Atrisco Business Park has planned for the proposed development to incorporate its flows into the 48" storm drain in Airport Drive.

This site is situated in Zone X as identified by the FIRM Map #35001C0329 D. The area identified as "Other Zone X" does not infringe on the western boundary of the property (see figure 1).

IV. Hydrologic Analysis

Section 22.2, Hydrology of the Development Process Manual was consulted in determining rainfall data. Using Table A-2 the depth for the 1-hour storm was established and then extrapolated using formulas and methods established in the NOAA Atlas 2. Table 1 shows the depth duration data used for the HEC –1 model. The HEC-1 model has been included in Appendix B.

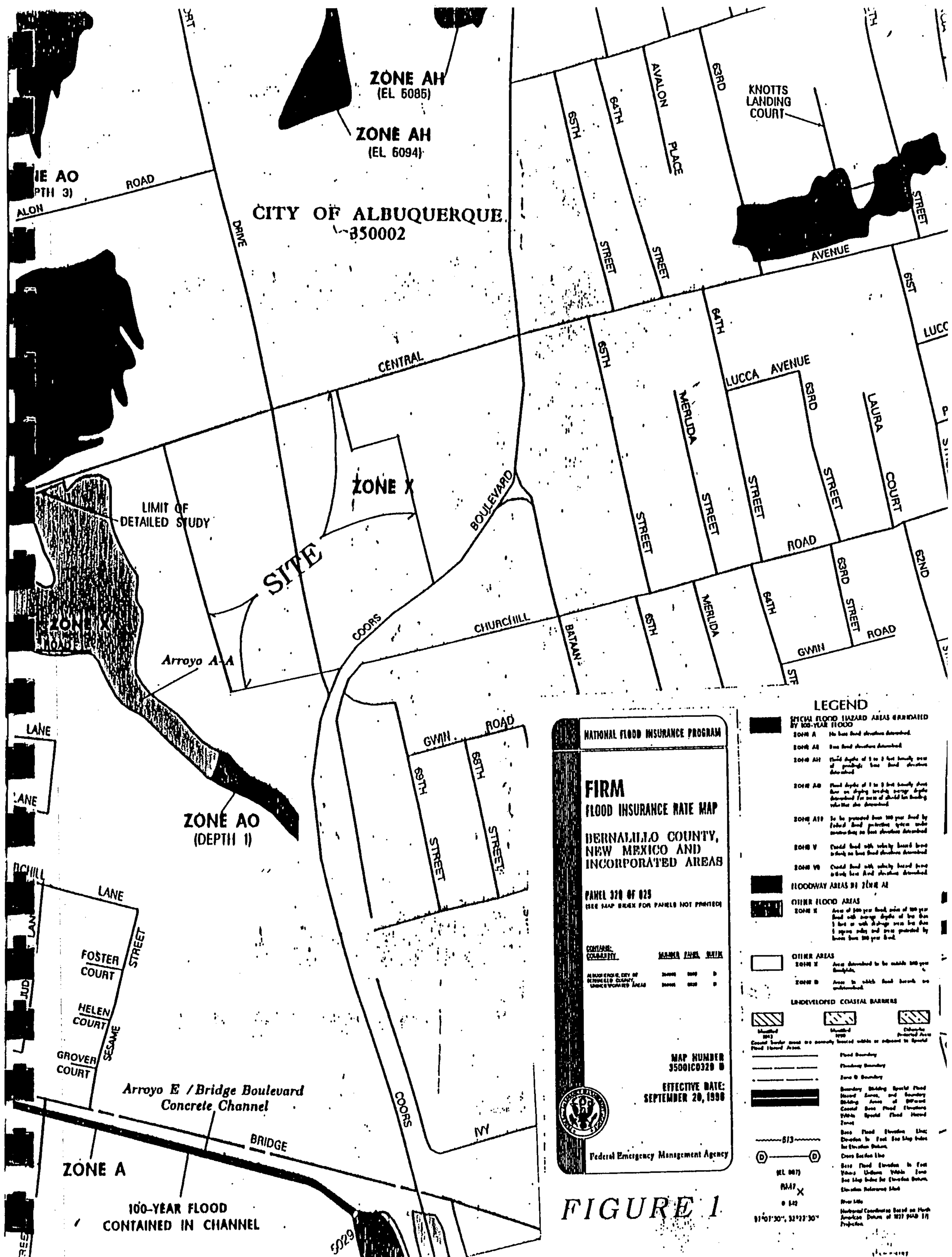
ZONE AH
(EL 5085)
ZONE AH
(EL 5094)
CITY OF ALBUQUERQUE
350002
ZONE X
LIMIT OF
DETAILED STUDY
SITE
ZONE X
Arroyo A-A
ZONE AO
(DEPTH 1)
Arroyo E / Bridge Boulevard
Concrete Channel
ZONE A
100-YEAR FLOOD
CONTAINED IN CHANNEL
CENTRAL
ROAD
BRIDGE
BOULEVARD
COORS
CHURCHILL
GWIN
ROAD
IVY
LANE
FOSTER
COURT
HELEN
COURT
GROVER
COURT
SESAME
STREET
KNOTTS
LANDING
COURT
AVALON
PLACE
LUCCA AVENUE
MERLUDA
STREET
LAURA
COURT
AVENUE
NATIONAL FLOOD INSURANCE PROGRAM
FIRM
FLOOD INSURANCE RATE MAP
BERNALILLO COUNTY,
NEW MEXICO AND
INCORPORATED AREAS
PANEL 320 OF 825
(SEE MAP INDEX FOR PANELS NOT PRINTED)
MAP NUMBER
350001C0320 B
EFFECTIVE DATE:
SEPTEMBER 20, 1996
Federal Emergency Management Agency
LEGEND

FIGURE 1

Time	Depth (inches)
5 Min.	0.54
15 Min.	1.06
60 Min	1.87
2 Hr.	1.98
3 Hr.	2.05
6 Hr.	2.20

Table 1. – Depth Duration

Existing flow rates are per the "Master Drainage Plan for the Atrisco Business Park" by Easterling & Associates, dated October 1993, Redline Copy, and are for the 100-year 6-hour storm. The Master Drainage Plan divided this site into various different basins. Each basin was analyzed for its existing flow rate and a subsequent allowable release rate under developed conditions was assigned. The portion of the proposed site west of Airport Drive is included in Basin 260.1 of the Master Drainage Plan. This basin is grouped together with a number of other basins, which are not to exceed a combined discharge of 146 cfs. This study prorated the discharge to the acreage and found an allowable release rate of 1.33 cfs/acre for Basin 260.1. The existing Albertson's includes basin 230.5 and a portion of 230.8. This study has pro-rated the allowable discharge for the remainder of basin 230.8, which is shown in the following table. The allowable discharge for the proposed site is summarized in Table 2.

Basin I.D.	Total Area (Ac.)	MS Dev. Site in Basin	Max Allowed Q Release (cfs)	Max Allowed Q Release for Site (cfs)
230.2	3.3	3.3	10.9	10.9
230.8	7.2	4.0	15.8	9.3
260.1	25.5	9.33	33.92	12.41
			Total Site=	**32.6**

Table 2. – Allowable Discharge for MS Development Site

V. Proposed Conditions and On-Site Storm Water Management Plan (revised 7/03/01)

The site has been divided into two drainage basins. Basin A includes everything to the west of the Kmart, the Kmart building itself, the shops to the north of Kmart and the associated parking. Basin B includes the parking area to the south of the Kmart and the drive through pad on the south side. (see figure 2).

Drainage within Basin A will sheet flow to a series of catch basins within the parking lot and then flow through a storm drain system to a large pond near the south-east corner of the site. Table 3 shows the peak flows from each sub-area within Basin A.

Appendix A

HYDROGRAPH AT STATION Pond A

DA	MON	HRMN	ORD	OUTFLOW	STORAGE	STAGE	DA	MON	HRMN	ORD	OUTFLOW	STORAGE	STAGE	DA	MON	HRMN	ORD	OUTFLOW	STORAGE	STAGE
22	JUN	0000	1	0.	0.0	80.2	22	JUN	0200	25	1.	0.0	80.3	22	JUN	0400	49	15.	0.7	85.8
22	JUN	0005	2	0.	0.0	80.2	22	JUN	0205	26	1.	0.0	80.3	22	JUN	0405	50	14.	0.6	85.5
22	JUN	0010	3	0.	0.0	80.2	22	JUN	0210	27	1.	0.0	80.4	22	JUN	0410	51	14.	0.5	85.3
22	JUN	0015	4	0.	0.0	80.2	22	JUN	0215	28	1.	0.0	80.4	22	JUN	0415	52	14.	0.4	85.0
22	JUN	0020	5	0.	0.0	80.2	22	JUN	0220	29	1.	0.0	80.4	22	JUN	0420	53	13.	0.3	84.8
22	JUN	0025	6	0.	0.0	80.2	22	JUN	0225	30	1.	0.0	80.5	22	JUN	0425	54	13.	0.2	84.5
22	JUN	0030	7	0.	0.0	80.2	22	JUN	0230	31	4.	0.0	81.2	22	JUN	0430	55	12.	0.2	84.2
22	JUN	0035	8	0.	0.0	80.2	22	JUN	0235	32	7.	0.0	82.1	22	JUN	0435	56	12.	0.1	84.0
22	JUN	0040	9	0.	0.0	80.2	22	JUN	0240	33	9.	0.0	82.8	22	JUN	0440	57	11.	0.0	83.5
22	JUN	0045	10	0.	0.0	80.2	22	JUN	0245	34	11.	0.0	83.5	22	JUN	0445	58	0.	0.0	80.2
22	JUN	0050	11	0.	0.0	80.2	22	JUN	0250	35	12.	0.1	83.8	22	JUN	0450	59	2.	0.0	80.7
22	JUN	0055	12	0.	0.0	80.2	22	JUN	0255	36	12.	0.2	84.3	22	JUN	0455	60	0.	0.0	80.2
22	JUN	0100	13	0.	0.0	80.2	22	JUN	0300	37	14.	0.5	85.2	22	JUN	0500	61	2.	0.0	80.7
22	JUN	0105	14	0.	0.0	80.2	22	JUN	0305	38	15.	0.8	86.3	22	JUN	0505	62	0.	0.0	80.2
22	JUN	0110	15	0.	0.0	80.3	22	JUN	0310	39	16.	1.1	86.9	22	JUN	0510	63	2.	0.0	80.6
22	JUN	0115	16	0.	0.0	80.3	22	JUN	0315	40	16.	1.2	87.1	22	JUN	0515	64	0.	0.0	80.2
22	JUN	0120	17	0.	0.0	80.3	22	JUN	0320	41	16.	1.2	87.2	22	JUN	0520	65	1.	0.0	80.6
22	JUN	0125	18	0.	0.0	80.3	22	JUN	0325	42	16.	1.2	87.2	22	JUN	0525	66	0.	0.0	80.2
22	JUN	0130	19	0.	0.0	80.3	22	JUN	0330	43	16.	1.2	87.1	22	JUN	0530	67	1.	0.0	80.6
22	JUN	0135	20	0.	0.0	80.3	22	JUN	0335	44	16.	1.1	87.0	22	JUN	0535	68	0.	0.0	80.2
22	JUN	0140	21	0.	0.0	80.3	22	JUN	0340	45	16.	1.0	86.7	22	JUN	0540	69	1.	0.0	80.5
22	JUN	0145	22	0.	0.0	80.3	22	JUN	0345	46	15.	0.9	86.5	22	JUN	0545	70	0.	0.0	80.2
22	JUN	0150	23	0.	0.0	80.3	22	JUN	0350	47	15.	0.9	86.3	22	JUN	0550	71	1.	0.0	80.5
22	JUN	0155	24	1.	0.0	80.3	22	JUN	0355	48	15.	0.8	86.0	22	JUN	0555	72	0.	0.0	80.2

HYDROGRAPH AT STATION Pond B

DA	MON	HRMN	ORD	OUTFLOW	STORAGE	STAGE	DA	MON	HRMN	ORD	OUTFLOW	STORAGE	STAGE	DA	MON	HRMN	ORD	OUTFLOW	STORAGE	STAGE
22	JUN	0000	1	0.	0.0	77.8	22	JUN	0200	25	0.	0.0	77.8	22	JUN	0400	49	1.	0.0	78.0
22	JUN	0005	2	0.	0.0	77.8	22	JUN	0205	26	0.	0.0	77.8	22	JUN	0405	50	0.	0.0	77.8
22	JUN	0010	3	0.	0.0	77.8	22	JUN	0210	27	0.	0.0	77.8	22	JUN	0410	51	0.	0.0	78.0
22	JUN	0015	4	0.	0.0	77.8	22	JUN	0215	28	0.	0.0	77.8	22	JUN	0415	52	0.	0.0	77.8
22	JUN	0020	5	0.	0.0	77.8	22	JUN	0220	29	0.	0.0	77.8	22	JUN	0420	53	0.	0.0	78.0
22	JUN	0025	6	0.	0.0	77.8	22	JUN	0225	30	0.	0.0	77.8	22	JUN	0425	54	0.	0.0	77.8
22	JUN	0030	7	0.	0.0	77.8	22	JUN	0230	31	0.	0.0	78.0	22	JUN	0430	55	0.	0.0	78.0
22	JUN	0035	8	0.	0.0	77.8	22	JUN	0235	32	1.	0.0	78.1	22	JUN	0435	56	0.	0.0	77.8
22	JUN	0040	9	0.	0.0	77.8	22	JUN	0240	33	1.	0.0	78.3	22	JUN	0440	57	0.	0.0	77.9
22	JUN	0045	10	0.	0.0	77.8	22	JUN	0245	34	2.	0.0	78.7	22	JUN	0445	58	0.	0.0	77.8
22	JUN	0050	11	0.	0.0	77.8	22	JUN	0250	35	4.	0.0	79.3	22	JUN	0450	59	0.	0.0	77.9
22	JUN	0055	12	0.	0.0	77.8	22	JUN	0255	36	6.	0.0	80.6	22	JUN	0455	60	0.	0.0	77.8
22	JUN	0100	13	0.	0.0	77.8	22	JUN	0300	37	7.	0.0	81.1	22	JUN	0500	61	0.	0.0	77.9
22	JUN	0105	14	0.	0.0	77.8	22	JUN	0305	38	7.	0.1	81.4	22	JUN	0505	62	0.	0.0	77.8
22	JUN	0110	15	0.	0.0	77.8	22	JUN	0310	39	8.	0.1	81.5	22	JUN	0510	63	0.	0.0	77.9
22	JUN	0115	16	0.	0.0	77.8	22	JUN	0315	40	7.	0.1	81.4	22	JUN	0515	64	0.	0.0	77.8
22	JUN	0120	17	0.	0.0	77.8	22	JUN	0320	41	7.	0.0	81.1	22	JUN	0520	65	0.	0.0	77.9
22	JUN	0125	18	0.	0.0	77.8	22	JUN	0325	42	7.	0.0	80.8	22	JUN	0525	66	0.	0.0	77.8
22	JUN	0130	19	0.	0.0	77.8	22	JUN	0330	43	2.	0.0	78.7	22	JUN	0530	67	0.	0.0	77.9
22	JUN	0135	20	0.	0.0	77.8	22	JUN	0335	44	0.	0.0	77.8	22	JUN	0535	68	0.	0.0	77.8
22	JUN	0140	21	0.	0.0	77.8	22	JUN	0340	45	1.	0.0	78.2	22	JUN	0540	69	0.	0.0	77.9
22	JUN	0145	22	0.	0.0	77.8	22	JUN	0345	46	0.	0.0	77.8	22	JUN	0545	70	0.	0.0	77.8
22	JUN	0150	23	0.	0.0	77.8	22	JUN	0350	47	1.	0.0	78.1	22	JUN	0550	71	0.	0.0	77.9
22	JUN	0155	24	0.	0.0	77.8	22	JUN	0355	48	0.	0.0	77.8	22	JUN	0555	72	0.	0.0	77.8

Scenario: Base

Pipe Report

Section Size	Mannings n	Full Capacity (cfs)	Upstream Invert Elevation (ft)	Downstream Invert Elevation (ft)	Upstream Ground Elevation (ft)	Downstream Ground Elevation (ft)	Upstream Cover (ft)	Downstream Cover (ft)	Hydraulic Grade Line In (ft)	Hydraulic Grade Line Out (ft)
15 inch	0.013	4.96	86.64	86.02	90.60	91.15	2.71	3.88	90.25	89.34
15 inch	0.013	6.51	86.02	84.00	91.15	87.40	3.88	2.15	89.12	87.40
24 inch	0.013	21.45	84.00	82.75	87.40	87.40	1.40	2.65	88.10	87.32
24 inch	0.013	21.15	82.75	81.64	87.40	87.40	2.65	3.76	86.94	85.74
30 inch	0.013	38.52	81.64	80.37	87.40	87.40	3.26	4.53	85.50	84.88
30 inch	0.013	37.94	80.37	79.60	87.40	83.40	4.53	1.30	84.55	84.00

Scenario: Base

Pipe Report

Label	Upstream Node	Downstream Node	Upstream Inlet Area (acres)	Upstream Inlet Rational Coefficient	Upstream Inlet CA (acres)	Upstream Calculated System CA (acres)	System Intensity (in/hr)	Total System Flow (cfs)	Length (ft)	Constructed Slope (ft/ft)
P-1	A1	J-1	0.00	0.00	0.00	0.00	0.00	6.00	105.00	0.005905
P-2	J-1	A2	N/A	N/A	N/A	0.00	0.00	6.00	199.00	0.010151
P-3	A2	A3	0.00	0.00	0.00	0.00	0.00	17.00	139.00	0.008993
P-4	A3	A4	0.00	0.00	0.00	0.00	0.00	22.00	127.00	0.008740
P-5	A4	A5	0.00	0.00	0.00	0.00	0.00	27.00	144.00	0.008819
P-6	A5	O-1	0.00	0.00	0.00	0.00	0.00	32.00	90.00	0.008556

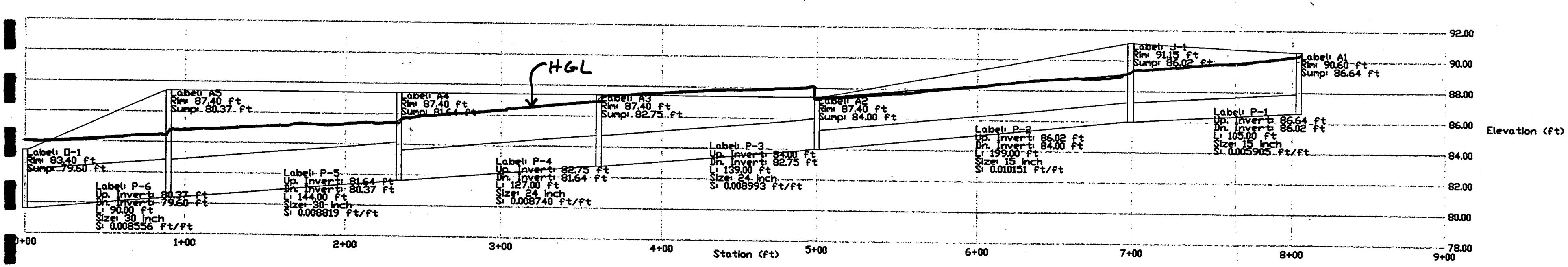
HGL
Label: D-1
Rim: 83.40 ft
Sump: 79.60 ft
Label: P-6
Up. Invert: 80.37 ft
Dn. Invert: 79.60 ft
L: 90.00 ft
Size: 30 inch
S: 0.008556 ft/ft
Label: A5
Rim: 87.40 ft
Sump: 80.37 ft
Label: P-5
Up. Invert: 81.64 ft
Dn. Invert: 80.37 ft
L: 144.00 ft
Size: 30 inch
S: 0.008819 ft/ft
Label: A4
Rim: 87.40 ft
Sump: 81.64 ft
Label: P-4
Up. Invert: 82.75 ft
Dn. Invert: 81.64 ft
L: 127.00 ft
Size: 24 inch
S: 0.008740 ft/ft
Label: A3
Rim: 87.40 ft
Sump: 82.75 ft
Label: P-3
Up. Invert: 84.00 ft
Dn. Invert: 82.75 ft
L: 139.00 ft
Size: 24 inch
S: 0.008993 ft/ft
Label: A2
Rim: 87.40 ft
Sump: 84.00 ft
Label: P-2
Up. Invert: 86.02 ft
Dn. Invert: 84.00 ft
L: 199.00 ft
Size: 15 inch
S: 0.010151 ft/ft
Label: J-1
Rim: 91.15 ft
Sump: 86.02 ft
Label: P-1
Up. Invert: 86.64 ft
Dn. Invert: 86.02 ft
L: 105.00 ft
Size: 15 inch
S: 0.005905 ft/ft
Label: A1
Rim: 90.60 ft
Sump: 86.64 ft
92.00
90.00
88.00
86.00
84.00
82.00
80.00
78.00
Elevation (ft)
0+00
1+00
2+00
3+00
4+00
5+00
6+00
7+00
8+00
9+00
Station (ft)

Scenario: Base

Pipe Report

Label	Upstream Node	Downstream Node	Upstream Inlet Area (acres)	Upstream Inlet Rational Coefficient	Upstream Inlet CA (acres)	Upstream Calculated System CA (acres)	System Intensity (in/hr)	Total System Flow (cfs)	Length (ft)	Constructed Slope (ft/ft)
P-1	A6	A7	0.00	0.00	0.00	0.00	0.00	8.00	137.00	0.004964
P-2	A7	A8	0.00	0.00	0.00	0.00	0.00	12.00	126.00	0.005635
P-3	A8	A9	0.00	0.00	0.00	0.00	0.00	16.00	144.00	0.005903
P-4	A9	J-1	0.00	0.00	0.00	0.00	0.00	19.00	89.00	0.005843
P-5	J-1	O-1	N/A	N/A	N/A	0.00	0.00	19.00	242.00	0.005950

Scenario: Base

Pipe Report

Section Size	Mannings n	Full Capacity (cfs)	Upstream Invert Elevation (ft)	Downstream Invert Elevation (ft)	Upstream Ground Elevation (ft)	Downstream Ground Elevation (ft)	Upstream Cover (ft)	Downstream Cover (ft)	Hydraulic Grade Line In (ft)	Hydraulic Grade Line Out (ft)
18 inch	0.013	7.40	84.00	83.32	87.40	87.40	1.90	2.58	88.19	87.40
21 inch	0.013	11.89	83.32	82.61	87.40	87.40	2.33	3.04	88.12	87.40
24 inch	0.013	17.38	82.61	81.76	87.40	87.40	2.79	3.64	87.63	86.91
24 inch	0.013	17.29	81.76	81.24	87.40	86.00	3.64	2.76	86.63	86.00
24 inch	0.013	17.45	81.24	79.80	86.00	83.40	2.76	1.60	85.71	84.00

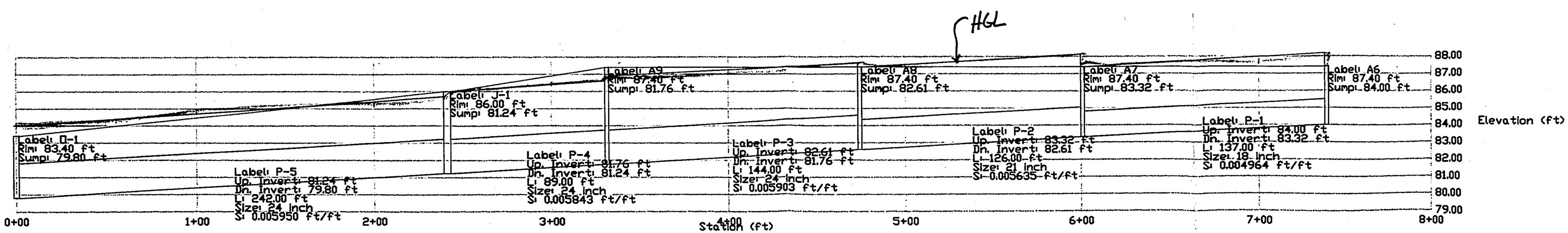
HGL
Label: D-1
Rim: 83.40 ft
Sump: 79.80 ft
Label: P-5
Up. Invert: 81.24 ft
Dn. Invert: 79.80 ft
L: 242.00 ft
Size: 24 inch
S: 0.005950 ft/ft
Label: J-1
Rim: 86.00 ft
Sump: 81.24 ft
Label: P-4
Up. Invert: 81.76 ft
Dn. Invert: 81.24 ft
L: 89.00 ft
Size: 24 inch
S: 0.005843 ft/ft
Label: A9
Rim: 87.40 ft
Sump: 81.76 ft
Label: P-3
Up. Invert: 82.61 ft
Dn. Invert: 81.76 ft
L: 144.00 ft
Size: 24 inch
S: 0.005903 ft/ft
Label: A8
Rim: 87.40 ft
Sump: 82.61 ft
Label: P-2
Up. Invert: 83.32 ft
Dn. Invert: 82.61 ft
L: 126.00 ft
Size: 21 inch
S: 0.005635 ft/ft
Label: A7
Rim: 87.40 ft
Sump: 83.32 ft
Label: P-1
Up. Invert: 84.00 ft
Dn. Invert: 83.32 ft
L: 137.00 ft
Size: 18 inch
S: 0.004964 ft/ft
Label: A6
Rim: 87.40 ft
Sump: 84.00 ft
0+00
1+00
2+00
3+00
4+00
5+00
6+00
7+00
8+00
Station (ft)
88.00
87.00
86.00
85.00
84.00
83.00
82.00
81.00
80.00
79.00
Elevation (ft)

Scenario: Base

Pipe Report

Label	Upstream Node	Downstream Node	Upstream Inlet Area (acres)	Upstream Inlet Rational Coefficient	Upstream Inlet CA (acres)	Upstream Calculated System CA (acres)	System Intensity (in/hr)	Total System Flow (cfs)	Length (ft)	Constructed Slope (ft/ft)
P-1	A10	J-1	0.00	0.00	0.00	0.00	0.00	3.00	109.00	0.021101
P-2	J-1	A11	N/A	N/A	N/A	0.00	0.00	3.00	77.00	0.004156
P-3	A11	A12-13	0.00	0.00	0.00	0.00	0.00	12.00	197.00	0.003909
P-4	A12-13	A14-15	0.00	0.00	0.00	0.00	0.00	23.00	189.00	0.003915
P-5	A14-15	J-2	0.00	0.00	0.00	0.00	0.00	31.00	244.00	0.004016
P-6	J-2	J-3	N/A	N/A	N/A	0.00	0.00	31.00	153.00	0.003922
P-7	J-3	O-1	N/A	N/A	N/A	0.00	0.00	31.00	174.00	0.005977

Scenario: Base

Pipe Report

Section Size	Mannings n	Full Capacity (cfs)	Upstream Invert Elevation (ft)	Downstream Invert Elevation (ft)	Upstream Ground Elevation (ft)	Downstream Ground Elevation (ft)	Upstream Cover (ft)	Downstream Cover (ft)	Hydraulic Grade Line In (ft)	Hydraulic Grade Line Out (ft)
12 inch	0.013	5.18	86.55	84.25	89.55	89.50	2.00	4.25	89.29	88.52
15 inch	0.013	4.16	84.25	83.93	89.50	89.75	4.00	4.57	88.47	88.30
24 inch	0.013	14.14	83.93	83.16	89.75	87.84	3.82	2.68	88.16	87.61
30 inch	0.013	25.66	83.16	82.42	87.84	86.81	2.18	1.89	87.40	86.81
30 inch	0.013	25.99	82.42	81.44	86.81	89.00	1.89	5.06	86.82	85.43
30 inch	0.013	25.68	81.44	80.84	89.00	89.40	5.06	6.06	85.43	84.56
36 inch	0.013	51.56	80.84	79.80	89.40	83.40	5.56	0.60	84.38	84.00

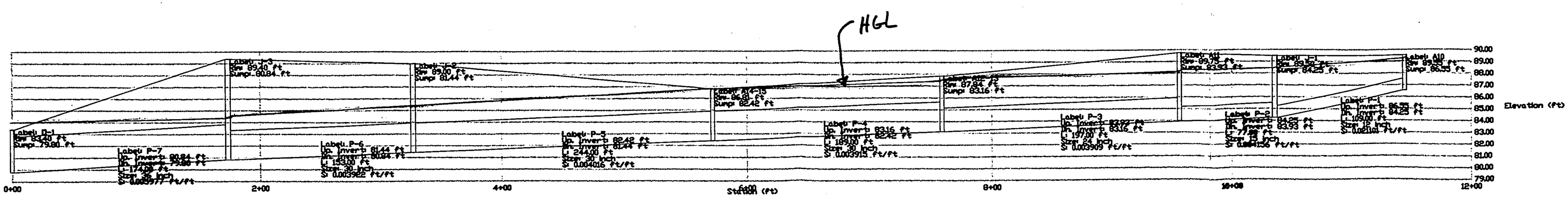
HGL
Elevation (ft)
Station (ft)
0+00
2+00
4+00
6+00
8+00
10+00
12+00
90.00
89.00
88.00
87.00
86.00
85.00
84.00
83.00
82.00
81.00
80.00
79.00

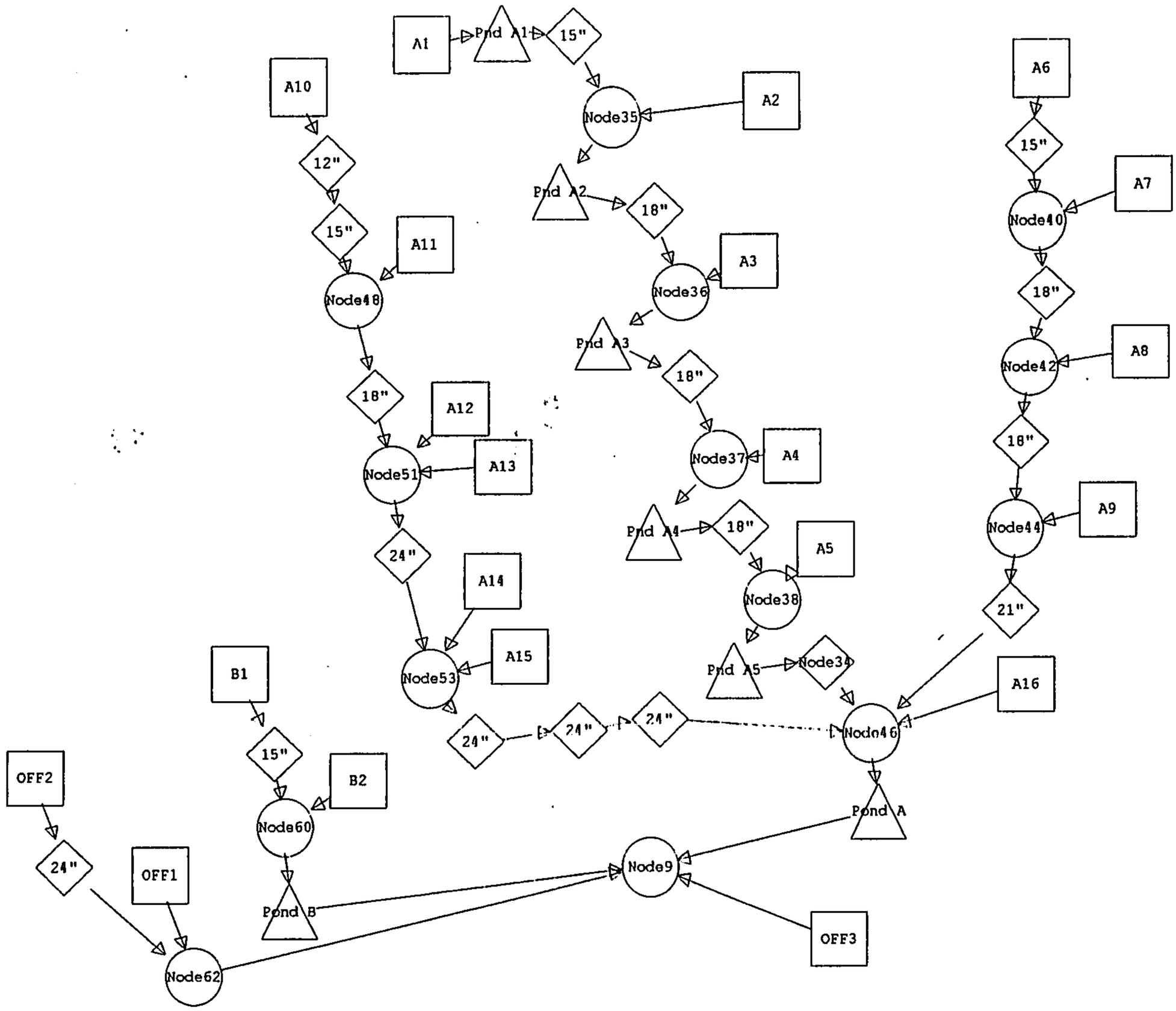
A1
Pnd A1
15"
Node35
A2
Pnd A2
18"
Node36
A3
Pnd A3
18"
Node37
A4
Pnd A4
18"
Node38
A5
Pnd A5
Node34
A6
15"
Node40
A7
18"
Node42
A8
18"
Node44
A9
21"
A10
12"
15"
Node48
A11
18"
Node51
A12
A13
24"
Node53
A14
A15
24"
24"
24"
Node46
A16
Pond A
B1
15"
Node60
B2
Pond B
OFF2
24"
OFF1
Node62
Node9
OFF3

Appendix B

HEC1 S/N: 1343001909 HMVersion: 6.33 Data File: C:\WIN\TEMP\~vbh200C.TMP

```
****************************************
*                                      *
*   FLOOD HYDROGRAPH PACKAGE  (HEC-1)  *
*              MAY   1991              *
*           VERSION 4.0.1E             *
*                                      *
*  RUN DATE  07/03/2001  TIME  10:57:47 *
*                                      *
****************************************
```

```
****************************************
*                                      *
*    U.S. ARMY CORPS OF ENGINEERS      *
*    HYDROLOGIC ENGINEERING CENTER     *
*          609 SECOND STREET           *
*       DAVIS, CALIFORNIA 95616        *
*           (916) 756-1104             *
*                                      *
****************************************
```

```
X     X  XXXXXXX   XXXXX          X
X     X  X        X     X        XX
X     X  X        X              X
XXXXXXX  XXXX     X        XXXXX X
X     X  X        X              X
X     X  X        X     X        X
X     X  XXXXXXX   XXXXX         XXX
```

```
::::::::::::::::::::::::::::::::::::::::
::::::::::::::::::::::::::::::::::::::::
:::                                  :::
:::  Full Microcomputer Implementation :::
:::                by                :::
:::       Haestad Methods, Inc.      :::
:::                                  :::
::::::::::::::::::::::::::::::::::::::::
::::::::::::::::::::::::::::::::::::::::
```

37 Brookside Road * Waterbury, Connecticut 06708 * (203) 755-1666

THIS PROGRAM REPLACES ALL PREVIOUS VERSIONS OF HEC-1 KNOWN AS HEC1 (JAN 73), HEC1GS, HEC1DB, AND HEC1KW.

THE DEFINITIONS OF VARIABLES -RTIMP- AND -RTIOR- HAVE CHANGED FROM THOSE USED WITH THE 1973-STYLE INPUT STRUCTURE.
THE DEFINITION OF -AMSKK- ON RM-CARD WAS CHANGED WITH REVISIONS DATED 28 SEP 81. THIS IS THE FORTRAN77 VERSION
NEW OPTIONS: DAMBREAK OUTFLOW SUBMERGENCE , SINGLE EVENT DAMAGE CALCULATION, DSS:WRITE STAGE FREQUENCY,
DSS:READ TIME SERIES AT DESIRED CALCULATION INTERVAL LOSS RATE:GREEN AND AMPT INFILTRATION
KINEMATIC WAVE: NEW FINITE DIFFERENCE ALGORITHM

```
LINE          ID.......1.......2.......3.......4.......5.......6.......7.......8.......9......10

  1           ID  Kmart - Coors & Central Albuquerque New Mexico
  2           IT       5 22JUN01    0000      72
  3           IO       5       0

  4           KK  A1
  5           KM
  6           KO                                        22
  7           BA    .002
  8           PH     100              .54    1.06    1.87    1.98    2.05    2.20
  9           LS       0      95
 10           UD    0.05

 11           KK  Pnd A1
 12           KM
 13           KO                                        22
 14           RS       1    ELEV   87.27
 15           SV       0    .001    .126
 16           SE   87.27    90.6    91.4
 17           SL   87.27    1.23     .62     0.5
 18           SS

 19           KK  15"
 20           KM
 21           KO                                        22
 22           RD     301     .01    .013            CIRC    1.25

 23           KK  A2
 24           KM
 25           KO                                        22
 26           BA   .0036
 27           LS       0      95
 28           UD    0.05

 29           KK  Node35
 30           KM
 31           KO                                        22
 32           HC       2

 33           KK  Pnd A2
 34           KM
 35           KO                                        22
 36           RS       1    ELEV   84.88
 37           SV       0    .001    .171
 38           SE   84.88    87.4   88.55
 39           SL   84.88    2.41     .62     0.5
 40           SS

 41           KK  18"
 42           KM
 43           KO                                        22
 44           RD     137    .009    .013            CIRC     1.5
```

```
LINE          ID.......1.......2.......3.......4.......5.......6.......7.......8.......9......10

  45          KK  A3
  46          KM
  47          KO                                      22
  48          BA   .0014
  49          LS       0      99
  50          UD    0.05

  51          KK  Node36
  52          KM
  53          KO                                      22
  54          HC       2

  55          KK  Pnd A3
  56          KM
  57          KO                                      22
  58          RS       1    ELEV   83.63
  59          SV       0    .001   0.218
  60          SE   83.63    87.4   88.55
  61          SL   83.63    2.41     .62     0.5
  62          SS

  63          KK  18"
  64          KM
  65          KO                                      22
  66          RD     124    .009    .013            CIRC     1.5

  67          KK  A4
  68          KM
  69          KO                                      22
  70          BA   .0014
  71          LS       0      99
  72          UD    0.05

  73          KK  Node37
  74          KM
  75          KO                                      22
  76          HC       2

  77          KK  Pnd A4
  78          KM
  79          KO                                      22
  80          RS       1    ELEV   82.64
  81          SV       0    .001   0.221
  82          SE   82.64    87.4   88.55
  83          SL   82.64    3.14     .62     0.5
  84          SS

  85          KK  18"
  86          KM
  87          KO                                      22
  88          RD     141    .009    .013            CIRC     1.5
```

```
LINE          ID.......1.......2.......3.......4.......5.......6.......7.......8.......9......10

  89          KK  A5
  90          KM
  91          KO                                      22
  92          BA   .0014
  93          LS       0      99
  94          UD    0.05

  95          KK  Node38
  96          KM
  97          KO                                      22
  98          HC       2

  99          KK  Pnd A5
 100          KM
 101          KO                                      22
 102          RS       1    ELEV   81.37
 103          SV       0    .001   0.309
 104          SE   81.37    87.4    89.0
 105          SL   81.37    3.14     .62     0.5
 106          SS

 107          KK  Node34
 108          KM
 109          KO                                      22
 110          RD      88    .009    .013            CIRC     1.5

 111          KK  A10
 112          KM
 113          KO                                      22
 114          BA  0.0009
 115          PH     100           0.54    1.06    1.87    1.98    2.05    2.20
 116          LS       0      95
 117          UD    0.05

 118          KK  12"
 119          KM
 120          KO                                      22
 121          RD     106   .0215    .013            CIRC       1

 122          KK  15"
 123          KM
 124          KO                                      22
 125          RD      73   0.004    .013            CIRC    1.25

 126          KK  A11
 127          KM
 128          KO                                      22
 129          BA  0.0026
 130          LS       0     100
 131          UD    0.05
```

```
LINE          ID.......1.......2.......3.......4.......5.......6.......7.......8.......9......10

 132          KK  Node48
 133          KM
 134          KO                                      22
 135          HC       2

 136          KK  18"
 137          KM
 138          KO                                      22
 139          RD     193   0.004    .013            CIRC      1.5

 140          KK  A12
 141          KM
 142          KO                                      22
 143          BA  0.0008
 144          LS       0      95
 145          UD    0.05

 146          KK  A13
 147          KM
 148          KO                                      22
 149          BA  0.0025
 150          LS       0     100
 151          UD    0.05

 152          KK  Node51
 153          KM
 154          KO                                      22
 155          HC       3

 156          KK  24"
 157          KM
 158          KO                                      22
 159          RD     185   0.004    .013            CIRC        2

 160          KK  A14
 161          KM
 162          KO                                      22
 163          BA  0.0005
 164          LS       0      95
 165          UD    0.05

 166          KK  A15
 167          KM
 168          KO                                      22
 169          BA  0.0016
 170          LS       0     100
 171          UD    0.05

 172          KK  Node53
 173          KM
 174          KO                                      22
 175          HC       3
```

```
LINE          ID.......1.......2.......3.......4.......5.......6.......7.......8.......9......10

 176          KK  24"
 177          KM
 178          KO                                      22
 179          RD     242   0.004    .013            CIRC       2

 180          KK  24"
 181          KM
 182          KO                                      22
 183          RD     150   0.004    .013            CIRC       2

 184          KK  24"
 185          KM
 186          KO                                      22
 187          RD     171   0.006    .013            CIRC       2

 188          KK  A6
 189          KM
 190          KO                                      22
 191          BA   .0026
 192          LS       0      95
 193          UD    0.05

 194          KK  15"
 195          KM
 196          KO                                      22
 197          RD     135    .007    .013            CIRC     1.25

 198          KK  A7
 199          KM
 200          KO                                      22
 201          BA  0.0012
 202          LS       0      95
 203          UD    0.05

 204          KK  Node40
 205          KM
 206          KO                                      22
 207          HC       2

 208          KK  18"
 209          KM
 210          KO                                      22
 211          RD     124    .007    .013            CIRC     1.5

 212          KK  A8
 213          KM
 214          KO                                      22
 215          BA  0.0012
 216          LS       0      95
 217          UD    0.05
```

```
LINE          ID.......1.......2.......3.......4.......5.......6.......7.......8.......9......10

 218          KK  Node42
 219          KM
 220          KO                                      22
 221          HC       2

 222          KK  18"
 223          KM
 224          KO                                      22
 225          RD     141    .007    .013            CIRC     1.5

 226          KK  A9
 227          KM
 228          KO                                      22
 229          BA  0.0011
 230          LS       0      95
 231          UD    0.05

 232          KK  Node44
 233          KM
 234          KO                                      22
 235          HC       2

 236          KK  21"
 237          KM
 238          KO                                      22
 239          RD      86    .007    .013            CIRC    1.75

 240          KK  A16
 241          KM
 242          KO                                      22
 243          BA   0.001
 244          LS       0     100
 245          UD    0.05

 246          KK  Node46
 247          KM
 248          KO                                      22
 249          HC       4

 250          KK  Pond A
 251          KM
 252          KO                                      22
 253          RS       1    ELEV      80
 254          SV       0    .001   0.086   0.393   0.742    1.14    1.59
 255          SE   80.15    83.4      84      85      86      87      88
 256          SL   80.15    1.23     .62     0.5
 257          SS

 258          KK  B1
 259          KM
 260          KO                                      22
 261          BA  0.0015
 262          LS       0      95
 263          UD    0.05
```

```
LINE          ID.......1.......2.......3.......4.......5.......6.......7.......8.......9......10

 264          KK  15"
 265          KM
 266          KO                                          22
 267          RD     150     .01    .013            CIRC     1.25

 268          KK  B2
 269          KM
 270          KO                                          22
 271          BA  0.0036
 272          LS       0      95
 273          UD    0.05

 274          KK  Node60
 275          KM
 276          KO                                      22
 277          HC       2

 278          KK  Pond B
 279          KM
 280          KO                                      22
 281          RS       1    ELEV    77.8
 282          SV       0    .001  0.0315  0.1375
 283          SE    77.8    80.5      81      82
 284          SL    77.8   0.785     .62     0.5
 285          SS

 286          KK  OFF2
 287          KM
 288          KO                                      22
 289          BA  0.0028
 290          LS       0      95
 291          UD     .12

 292          KK  24"
 293          KM
 294          KO                                          22
 295          RD     391    .005   0.013            CIRC       2

 296          KK  OFF1
 297          KM
 298          KO                                          22
 299          BA  0.0012
 300          LS       0      95
 301          UD     .12

 302          KK  Node62
 303          KM
 304          KO                                      22
 305          HC       2
```

```
LINE          ID.......1.......2.......3.......4.......5.......6.......7.......8.......9......10

 306          KK  OFF3
 307          KM
 308          KO                                      22
 309          BA  0.0018
 310          LS       0       95
 311          UD     .12

 312          KK  Node9
 313          KM
 314          KO                                      22
 315          HC       4
 316          ZZ
```

```
HEC1 S/N: 1343001909        HMVersion: 6.33    Data File: C:\WIN\TEMP\~vbh200C.TMP

                                                          ****************************************
                                                          *                                      *
                                                          *   U.S. ARMY CORPS OF ENGINEERS       *
                                                          *   HYDROLOGIC ENGINEERING CENTER      *
                                                          *         609 SECOND STREET            *
                                                          *      DAVIS, CALIFORNIA 95616         *
                                                          *          (916) 756-1104              *
                                                          *                                      *
                                                          ****************************************

 ****************************************
 *                                      *
 *   FLOOD HYDROGRAPH PACKAGE  (HEC-1)  *
 *              MAY   1991              *
 *           VERSION 4.0.1E             *
 *                                      *
 *  RUN DATE  07/03/2001  TIME  10:57:47 *
 *                                      *
 ****************************************

                    Kmart - Coors & Central Albuquerque New Mexico

3 IO          OUTPUT CONTROL VARIABLES
                    IPRNT           5  PRINT CONTROL
                    IPLOT           0  PLOT CONTROL
                    QSCAL          0.  HYDROGRAPH PLOT SCALE

  IT          HYDROGRAPH TIME DATA
                     NMIN           5  MINUTES IN COMPUTATION INTERVAL
                    IDATE     22JUN 1  STARTING DATE
                    ITIME        0000  STARTING TIME
                       NQ          72  NUMBER OF HYDROGRAPH ORDINATES
                   NDDATE     22JUN 1  ENDING DATE
                   NDTIME        0555  ENDING TIME
                    ICENT          19  CENTURY MARK

              COMPUTATION INTERVAL    0.08 HOURS
                   TOTAL TIME BASE    5.92 HOURS

        ENGLISH UNITS
             DRAINAGE AREA          SQUARE MILES
             PRECIPITATION DEPTH    INCHES
             LENGTH, ELEVATION      FEET
             FLOW                   CUBIC FEET PER SECOND
             STORAGE VOLUME         ACRE-FEET
             SURFACE AREA           ACRES
             TEMPERATURE            DEGREES FAHRENHEIT

*** *** *** *** *** *** *** *** *** *** *** *** *** *** *** *** *** *** *** *** *** *** *** *** *** *** *** *** *** *** *** *** *** ***

            **************
            *            *
  4 KK      *    A1      *
            *            *
            **************

  6 KO          OUTPUT CONTROL VARIABLES
                      IPRNT           5  PRINT CONTROL
                      IPLOT           0  PLOT CONTROL
                      QSCAL          0.  HYDROGRAPH PLOT SCALE
                      IPNCH           0  PUNCH COMPUTED HYDROGRAPH
                       IOUT          22  SAVE HYDROGRAPH ON THIS UNIT
                      ISAV1           1  FIRST ORDINATE PUNCHED OR SAVED
                      ISAV2          72  LAST ORDINATE PUNCHED OR SAVED
                     TIMINT       0.083  TIME INTERVAL IN HOURS

*** *** *** *** *** *** *** *** *** *** *** *** *** *** *** *** *** *** *** *** *** *** *** *** *** *** *** *** *** *** *** *** *** ***

            **************
            *            *
  11 KK     *    Pnd A1  *
            *            *
            **************

  13 KO         OUTPUT CONTROL VARIABLES
                      IPRNT           5  PRINT CONTROL
                      IPLOT           0  PLOT CONTROL
```

```
                QSCAL          0.  HYDROGRAPH PLOT SCALE
                IPNCH          0   PUNCH COMPUTED HYDROGRAPH
                 IOUT         22   SAVE HYDROGRAPH ON THIS UNIT
                ISAV1          1   FIRST ORDINATE PUNCHED OR SAVED
                ISAV2         72   LAST ORDINATE PUNCHED OR SAVED
               TIMINT      0.083   TIME INTERVAL IN HOURS

*** *** *** *** *** *** *** *** *** *** *** *** *** *** *** *** *** *** *** *** *** *** *** *** *** *** *** *** *** *** *** *** *** *** ***

          **************
          *            *
 19 KK    *    15"     *
          *            *
          **************

 21 KO          OUTPUT CONTROL VARIABLES
                      IPRNT          5   PRINT CONTROL
                      IPLOT          0   PLOT CONTROL
                      QSCAL         0.   HYDROGRAPH PLOT SCALE
                      IPNCH          0   PUNCH COMPUTED HYDROGRAPH
                       IOUT         22   SAVE HYDROGRAPH ON THIS UNIT
                      ISAV1          1   FIRST ORDINATE PUNCHED OR SAVED
                      ISAV2         72   LAST ORDINATE PUNCHED OR SAVED
                     TIMINT      0.083   TIME INTERVAL IN HOURS

*** *** *** *** *** *** *** *** *** *** *** *** *** *** *** *** *** *** *** *** *** *** *** *** *** *** *** *** *** *** *** *** *** ***

          **************
          *            *
 23 KK    *    A2      *
          *            *
          **************

 25 KO          OUTPUT CONTROL VARIABLES
                      IPRNT          5   PRINT CONTROL
                      IPLOT          0   PLOT CONTROL
                      QSCAL         0.   HYDROGRAPH PLOT SCALE
                      IPNCH          0   PUNCH COMPUTED HYDROGRAPH
                       IOUT         22   SAVE HYDROGRAPH ON THIS UNIT
                      ISAV1          1   FIRST ORDINATE PUNCHED OR SAVED
                      ISAV2         72   LAST ORDINATE PUNCHED OR SAVED
                     TIMINT      0.083   TIME INTERVAL IN HOURS

*** *** *** *** *** *** *** *** *** *** *** *** *** *** *** *** *** *** *** *** *** *** *** *** *** *** *** *** *** *** *** *** *** *** ***

          **************
          *            *
 29 KK    *   Node35   *
          *            *
          **************

 31 KO          OUTPUT CONTROL VARIABLES
                      IPRNT          5   PRINT CONTROL
                      IPLOT          0   PLOT CONTROL
                      QSCAL         0.   HYDROGRAPH PLOT SCALE
                      IPNCH          0   PUNCH COMPUTED HYDROGRAPH
                       IOUT         22   SAVE HYDROGRAPH ON THIS UNIT
                      ISAV1          1   FIRST ORDINATE PUNCHED OR SAVED
                      ISAV2         72   LAST ORDINATE PUNCHED OR SAVED
                     TIMINT      0.083   TIME INTERVAL IN HOURS

*** *** *** *** *** *** *** *** *** *** *** *** *** *** *** *** *** *** *** *** *** *** *** *** *** *** *** *** *** *** *** *** *** *** ***

          **************
          *            *
```

```
33 KK      *     Pnd A2   *
           *              *
           **************

35 KO            OUTPUT CONTROL VARIABLES
                       IPRNT           5  PRINT CONTROL
                       IPLOT           0  PLOT CONTROL
                       QSCAL          0.  HYDROGRAPH PLOT SCALE
                       IPNCH           0  PUNCH COMPUTED HYDROGRAPH
                        IOUT          22  SAVE HYDROGRAPH ON THIS UNIT
                       ISAV1           1  FIRST ORDINATE PUNCHED OR SAVED
                       ISAV2          72  LAST ORDINATE PUNCHED OR SAVED
                      TIMINT       0.083  TIME INTERVAL IN HOURS

*** *** *** *** *** *** *** *** *** *** *** *** *** *** *** *** *** *** *** *** *** *** *** *** *** *** *** *** *** *** *** *** *** *** ***

           **************
           *              *
41 KK      *     18"      *
           *              *
           **************

43 KO            OUTPUT CONTROL VARIABLES
                       IPRNT           5  PRINT CONTROL
                       IPLOT           0  PLOT CONTROL
                       QSCAL          0.  HYDROGRAPH PLOT SCALE
                       IPNCH           0  PUNCH COMPUTED HYDROGRAPH
                        IOUT          22  SAVE HYDROGRAPH ON THIS UNIT
                       ISAV1           1  FIRST ORDINATE PUNCHED OR SAVED
                       ISAV2          72  LAST ORDINATE PUNCHED OR SAVED
                      TIMINT       0.083  TIME INTERVAL IN HOURS

*** *** *** *** *** *** *** *** *** *** *** *** *** *** *** *** *** *** *** *** *** *** *** *** *** *** *** *** *** *** *** *** *** *** ***

           **************
           *              *
45 KK      *     A3       *
           *              *
           **************

47 KO            OUTPUT CONTROL VARIABLES
                       IPRNT           5  PRINT CONTROL
                       IPLOT           0  PLOT CONTROL
                       QSCAL          0.  HYDROGRAPH PLOT SCALE
                       IPNCH           0  PUNCH COMPUTED HYDROGRAPH
                        IOUT          22  SAVE HYDROGRAPH ON THIS UNIT
                       ISAV1           1  FIRST ORDINATE PUNCHED OR SAVED
                       ISAV2          72  LAST ORDINATE PUNCHED OR SAVED
                      TIMINT       0.083  TIME INTERVAL IN HOURS

*** *** *** *** *** *** *** *** *** *** *** *** *** *** *** *** *** *** *** *** *** *** *** *** *** *** *** *** *** *** *** *** *** *** ***

           **************
           *              *
51 KK      *    Node36    *
           *              *
           **************

53 KO            OUTPUT CONTROL VARIABLES
                       IPRNT           5  PRINT CONTROL
                       IPLOT           0  PLOT CONTROL
                       QSCAL          0.  HYDROGRAPH PLOT SCALE
                       IPNCH           0  PUNCH COMPUTED HYDROGRAPH
                        IOUT          22  SAVE HYDROGRAPH ON THIS UNIT
                       ISAV1           1  FIRST ORDINATE PUNCHED OR SAVED
                       ISAV2          72  LAST ORDINATE PUNCHED OR SAVED
                      TIMINT       0.083  TIME INTERVAL IN HOURS
```

*** ***

```
              **************
              *            *
  55 KK       *    Pnd A3  *
              *            *
              **************

  57 KO            OUTPUT CONTROL VARIABLES
                         IPRNT           5  PRINT CONTROL
                         IPLOT           0  PLOT CONTROL
                         QSCAL          0.  HYDROGRAPH PLOT SCALE
                         IPNCH           0  PUNCH COMPUTED HYDROGRAPH
                          IOUT          22  SAVE HYDROGRAPH ON THIS UNIT
                         ISAV1           1  FIRST ORDINATE PUNCHED OR SAVED
                         ISAV2          72  LAST ORDINATE PUNCHED OR SAVED
                        TIMINT       0.083  TIME INTERVAL IN HOURS
```

*** ***

```
              **************
              *            *
  63 KK       *    18"     *
              *            *
              **************

  65 KO            OUTPUT CONTROL VARIABLES
                         IPRNT           5  PRINT CONTROL
                         IPLOT           0  PLOT CONTROL
                         QSCAL          0.  HYDROGRAPH PLOT SCALE
                         IPNCH           0  PUNCH COMPUTED HYDROGRAPH
                          IOUT          22  SAVE HYDROGRAPH ON THIS UNIT
                         ISAV1           1  FIRST ORDINATE PUNCHED OR SAVED
                         ISAV2          72  LAST ORDINATE PUNCHED OR SAVED
                        TIMINT       0.083  TIME INTERVAL IN HOURS
```

*** ***

```
              **************
              *            *
  67 KK       *    A4      *
              *            *
              **************

  69 KO            OUTPUT CONTROL VARIABLES
                         IPRNT           5  PRINT CONTROL
                         IPLOT           0  PLOT CONTROL
                         QSCAL          0.  HYDROGRAPH PLOT SCALE
                         IPNCH           0  PUNCH COMPUTED HYDROGRAPH
                          IOUT          22  SAVE HYDROGRAPH ON THIS UNIT
                         ISAV1           1  FIRST ORDINATE PUNCHED OR SAVED
                         ISAV2          72  LAST ORDINATE PUNCHED OR SAVED
                        TIMINT       0.083  TIME INTERVAL IN HOURS
```

*** ***

```
              **************
              *            *
  73 KK       *    Node37  *
              *            *
              **************

  75 KO            OUTPUT CONTROL VARIABLES
                         IPRNT           5  PRINT CONTROL
                         IPLOT           0  PLOT CONTROL
                         QSCAL          0.  HYDROGRAPH PLOT SCALE
```

```
                IPNCH          0  PUNCH COMPUTED HYDROGRAPH
                 IOUT         22  SAVE HYDROGRAPH ON THIS UNIT
                ISAV1          1  FIRST ORDINATE PUNCHED OR SAVED
                ISAV2         72  LAST ORDINATE PUNCHED OR SAVED
               TIMINT      0.083  TIME INTERVAL IN HOURS

*** *** *** *** *** *** *** *** *** *** *** *** *** *** *** *** *** *** *** *** *** *** *** *** *** *** *** *** *** *** *** *** ***

            **************
            *            *
 77 KK      *    Pnd A4  *
            *            *
            **************

 79 KO          OUTPUT CONTROL VARIABLES
                      IPRNT          5  PRINT CONTROL
                      IPLOT          0  PLOT CONTROL
                      QSCAL         0.  HYDROGRAPH PLOT SCALE
                      IPNCH          0  PUNCH COMPUTED HYDROGRAPH
                       IOUT         22  SAVE HYDROGRAPH ON THIS UNIT
                      ISAV1          1  FIRST ORDINATE PUNCHED OR SAVED
                      ISAV2         72  LAST ORDINATE PUNCHED OR SAVED
                     TIMINT      0.083  TIME INTERVAL IN HOURS

*** *** *** *** *** *** *** *** *** *** *** *** *** *** *** *** *** *** *** *** *** *** *** *** *** *** *** *** *** *** *** *** ***

            **************
            *            *
 85 KK      *    18"     *
            *            *
            **************

 87 KO          OUTPUT CONTROL VARIABLES
                      IPRNT          5  PRINT CONTROL
                      IPLOT          0  PLOT CONTROL
                      QSCAL         0.  HYDROGRAPH PLOT SCALE
                      IPNCH          0  PUNCH COMPUTED HYDROGRAPH
                       IOUT         22  SAVE HYDROGRAPH ON THIS UNIT
                      ISAV1          1  FIRST ORDINATE PUNCHED OR SAVED
                      ISAV2         72  LAST ORDINATE PUNCHED OR SAVED
                     TIMINT      0.083  TIME INTERVAL IN HOURS

*** *** *** *** *** *** *** *** *** *** *** *** *** *** *** *** *** *** *** *** *** *** *** *** *** *** *** *** *** *** *** *** ***

            **************
            *            *
 89 KK      *    A5      *
            *            *
            **************

 91 KO          OUTPUT CONTROL VARIABLES
                      IPRNT          5  PRINT CONTROL
                      IPLOT          0  PLOT CONTROL
                      QSCAL         0.  HYDROGRAPH PLOT SCALE
                      IPNCH          0  PUNCH COMPUTED HYDROGRAPH
                       IOUT         22  SAVE HYDROGRAPH ON THIS UNIT
                      ISAV1          1  FIRST ORDINATE PUNCHED OR SAVED
                      ISAV2         72  LAST ORDINATE PUNCHED OR SAVED
                     TIMINT      0.083  TIME INTERVAL IN HOURS

*** *** *** *** *** *** *** *** *** *** *** *** *** *** *** *** *** *** *** *** *** *** *** *** *** *** *** *** *** *** *** *** ***

            **************
            *            *
 95 KK      *    Node38  *
```

```
          *             *
          **************

97 KO          OUTPUT CONTROL VARIABLES
                     IPRNT           5  PRINT CONTROL
                     IPLOT           0  PLOT CONTROL
                     QSCAL          0.  HYDROGRAPH PLOT SCALE
                     IPNCH           0  PUNCH COMPUTED HYDROGRAPH
                      IOUT          22  SAVE HYDROGRAPH ON THIS UNIT
                     ISAV1           1  FIRST ORDINATE PUNCHED OR SAVED
                     ISAV2          72  LAST ORDINATE PUNCHED OR SAVED
                    TIMINT       0.083  TIME INTERVAL IN HOURS

*** *** *** *** *** *** *** *** *** *** *** *** *** *** *** *** *** *** *** *** *** *** *** *** *** *** *** *** *** *** *** *** *** ***

          **************
          *             *
99 KK     *    Pnd A5   *
          *             *
          **************

101 KO         OUTPUT CONTROL VARIABLES
                     IPRNT           5  PRINT CONTROL
                     IPLOT           0  PLOT CONTROL
                     QSCAL          0.  HYDROGRAPH PLOT SCALE
                     IPNCH           0  PUNCH COMPUTED HYDROGRAPH
                      IOUT          22  SAVE HYDROGRAPH ON THIS UNIT
                     ISAV1           1  FIRST ORDINATE PUNCHED OR SAVED
                     ISAV2          72  LAST ORDINATE PUNCHED OR SAVED
                    TIMINT       0.083  TIME INTERVAL IN HOURS

*** *** *** *** *** *** *** *** *** *** *** *** *** *** *** *** *** *** *** *** *** *** *** *** *** *** *** *** *** *** *** *** *** ***

          **************
          *             *
107 KK    *    Node34   *
          *             *
          **************

109 KO         OUTPUT CONTROL VARIABLES
                     IPRNT           5  PRINT CONTROL
                     IPLOT           0  PLOT CONTROL
                     QSCAL          0.  HYDROGRAPH PLOT SCALE
                     IPNCH           0  PUNCH COMPUTED HYDROGRAPH
                      IOUT          22  SAVE HYDROGRAPH ON THIS UNIT
                     ISAV1           1  FIRST ORDINATE PUNCHED OR SAVED
                     ISAV2          72  LAST ORDINATE PUNCHED OR SAVED
                    TIMINT       0.083  TIME INTERVAL IN HOURS

*** *** *** *** *** *** *** *** *** *** *** *** *** *** *** *** *** *** *** *** *** *** *** *** *** *** *** *** *** *** *** *** *** ***

          **************
          *             *
111 KK    *    A10      *
          *             *
          **************

113 KO         OUTPUT CONTROL VARIABLES
                     IPRNT           5  PRINT CONTROL
                     IPLOT           0  PLOT CONTROL
                     QSCAL          0.  HYDROGRAPH PLOT SCALE
                     IPNCH           0  PUNCH COMPUTED HYDROGRAPH
                      IOUT          22  SAVE HYDROGRAPH ON THIS UNIT
                     ISAV1           1  FIRST ORDINATE PUNCHED OR SAVED
                     ISAV2          72  LAST ORDINATE PUNCHED OR SAVED
                    TIMINT       0.083  TIME INTERVAL IN HOURS
```

```
*** *** *** *** *** *** *** *** *** *** *** *** *** *** *** *** *** *** *** *** *** *** *** *** *** *** *** *** *** *** *** *** *** ***

            **************
            *            *
118 KK      *    12"     *
            *            *
            **************

120 KO          OUTPUT CONTROL VARIABLES
                      IPRNT           5  PRINT CONTROL
                      IPLOT           0  PLOT CONTROL
                      QSCAL          0.  HYDROGRAPH PLOT SCALE
                      IPNCH           0  PUNCH COMPUTED HYDROGRAPH
                       IOUT          22  SAVE HYDROGRAPH ON THIS UNIT
                      ISAV1           1  FIRST ORDINATE PUNCHED OR SAVED
                      ISAV2          72  LAST ORDINATE PUNCHED OR SAVED
                     TIMINT       0.083  TIME INTERVAL IN HOURS


*** *** *** *** *** *** *** *** *** *** *** *** *** *** *** *** *** *** *** *** *** *** *** *** *** *** *** *** *** *** *** *** *** ***

            **************
            *            *
122 KK      *    15"     *
            *            *
            **************

124 KO          OUTPUT CONTROL VARIABLES
                      IPRNT           5  PRINT CONTROL
                      IPLOT           0  PLOT CONTROL
                      QSCAL          0.  HYDROGRAPH PLOT SCALE
                      IPNCH           0  PUNCH COMPUTED HYDROGRAPH
                       IOUT          22  SAVE HYDROGRAPH ON THIS UNIT
                      ISAV1           1  FIRST ORDINATE PUNCHED OR SAVED
                      ISAV2          72  LAST ORDINATE PUNCHED OR SAVED
                     TIMINT       0.083  TIME INTERVAL IN HOURS


*** *** *** *** *** *** *** *** *** *** *** *** *** *** *** *** *** *** *** *** *** *** *** *** *** *** *** *** *** *** *** *** *** ***

            **************
            *            *
126 KK      *    A11     *
            *            *
            **************

128 KO          OUTPUT CONTROL VARIABLES
                      IPRNT           5  PRINT CONTROL
                      IPLOT           0  PLOT CONTROL
                      QSCAL          0.  HYDROGRAPH PLOT SCALE
                      IPNCH           0  PUNCH COMPUTED HYDROGRAPH
                       IOUT          22  SAVE HYDROGRAPH ON THIS UNIT
                      ISAV1           1  FIRST ORDINATE PUNCHED OR SAVED
                      ISAV2          72  LAST ORDINATE PUNCHED OR SAVED
                     TIMINT       0.083  TIME INTERVAL IN HOURS


*** *** *** *** *** *** *** *** *** *** *** *** *** *** *** *** *** *** *** *** *** *** *** *** *** *** *** *** *** *** *** *** *** ***

            **************
            *            *
132 KK      *   Node48   *
            *            *
            **************

134 KO          OUTPUT CONTROL VARIABLES
                      IPRNT           5  PRINT CONTROL
                      IPLOT           0  PLOT CONTROL
                      QSCAL          0.  HYDROGRAPH PLOT SCALE
                      IPNCH           0  PUNCH COMPUTED HYDROGRAPH
```

```
                IOUT          22  SAVE HYDROGRAPH ON THIS UNIT
               ISAV1           1  FIRST ORDINATE PUNCHED OR SAVED
               ISAV2          72  LAST ORDINATE PUNCHED OR SAVED
              TIMINT       0.083  TIME INTERVAL IN HOURS

*** *** *** *** *** *** *** *** *** *** *** *** *** *** *** *** *** *** *** *** *** *** *** *** *** *** *** *** *** *** *** *** *** *** ***

          **************
          *            *
136 KK    *    18"     *
          *            *
          **************

138 KO          OUTPUT CONTROL VARIABLES
                      IPRNT           5  PRINT CONTROL
                      IPLOT           0  PLOT CONTROL
                      QSCAL          0.  HYDROGRAPH PLOT SCALE
                      IPNCH           0  PUNCH COMPUTED HYDROGRAPH
                       IOUT          22  SAVE HYDROGRAPH ON THIS UNIT
                      ISAV1           1  FIRST ORDINATE PUNCHED OR SAVED
                      ISAV2          72  LAST ORDINATE PUNCHED OR SAVED
                     TIMINT       0.083  TIME INTERVAL IN HOURS

*** *** *** *** *** *** *** *** *** *** *** *** *** *** *** *** *** *** *** *** *** *** *** *** *** *** *** *** *** *** *** *** *** *** ***

          **************
          *            *
140 KK    *    A12     *
          *            *
          **************

142 KO          OUTPUT CONTROL VARIABLES
                      IPRNT           5  PRINT CONTROL
                      IPLOT           0  PLOT CONTROL
                      QSCAL          0.  HYDROGRAPH PLOT SCALE
                      IPNCH           0  PUNCH COMPUTED HYDROGRAPH
                       IOUT          22  SAVE HYDROGRAPH ON THIS UNIT
                      ISAV1           1  FIRST ORDINATE PUNCHED OR SAVED
                      ISAV2          72  LAST ORDINATE PUNCHED OR SAVED
                     TIMINT       0.083  TIME INTERVAL IN HOURS

*** *** *** *** *** *** *** *** *** *** *** *** *** *** *** *** *** *** *** *** *** *** *** *** *** *** *** *** *** *** *** *** *** *** ***

          **************
          *            *
146 KK    *    A13     *
          *            *
          **************

148 KO          OUTPUT CONTROL VARIABLES
                      IPRNT           5  PRINT CONTROL
                      IPLOT           0  PLOT CONTROL
                      QSCAL          0.  HYDROGRAPH PLOT SCALE
                      IPNCH           0  PUNCH COMPUTED HYDROGRAPH
                       IOUT          22  SAVE HYDROGRAPH ON THIS UNIT
                      ISAV1           1  FIRST ORDINATE PUNCHED OR SAVED
                      ISAV2          72  LAST ORDINATE PUNCHED OR SAVED
                     TIMINT       0.083  TIME INTERVAL IN HOURS

*** *** *** *** *** *** *** *** *** *** *** *** *** *** *** *** *** *** *** *** *** *** *** *** *** *** *** *** *** *** *** *** *** *** ***

          **************
          *            *
152 KK    *    Node51  *
          *            *
```

```
              **************
154 KO          OUTPUT CONTROL VARIABLES
                      IPRNT           5  PRINT CONTROL
                      IPLOT           0  PLOT CONTROL
                      QSCAL          0.  HYDROGRAPH PLOT SCALE
                      IPNCH           0  PUNCH COMPUTED HYDROGRAPH
                       IOUT          22  SAVE HYDROGRAPH ON THIS UNIT
                      ISAV1           1  FIRST ORDINATE PUNCHED OR SAVED
                      ISAV2          72  LAST ORDINATE PUNCHED OR SAVED
                     TIMINT       0.083  TIME INTERVAL IN HOURS

*** *** *** *** *** *** *** *** *** *** *** *** *** *** *** *** *** *** *** *** *** *** *** *** *** *** *** *** *** *** *** *** *** ***

              **************
              *            *
156 KK        *    24"     *
              *            *
              **************

158 KO          OUTPUT CONTROL VARIABLES
                      IPRNT           5  PRINT CONTROL
                      IPLOT           0  PLOT CONTROL
                      QSCAL          0.  HYDROGRAPH PLOT SCALE
                      IPNCH           0  PUNCH COMPUTED HYDROGRAPH
                       IOUT          22  SAVE HYDROGRAPH ON THIS UNIT
                      ISAV1           1  FIRST ORDINATE PUNCHED OR SAVED
                      ISAV2          72  LAST ORDINATE PUNCHED OR SAVED
                     TIMINT       0.083  TIME INTERVAL IN HOURS

*** *** *** *** *** *** *** *** *** *** *** *** *** *** *** *** *** *** *** *** *** *** *** *** *** *** *** *** *** *** *** *** *** ***

              **************
              *            *
160 KK        *    A14     *
              *            *
              **************

162 KO          OUTPUT CONTROL VARIABLES
                      IPRNT           5  PRINT CONTROL
                      IPLOT           0  PLOT CONTROL
                      QSCAL          0.  HYDROGRAPH PLOT SCALE
                      IPNCH           0  PUNCH COMPUTED HYDROGRAPH
                       IOUT          22  SAVE HYDROGRAPH ON THIS UNIT
                      ISAV1           1  FIRST ORDINATE PUNCHED OR SAVED
                      ISAV2          72  LAST ORDINATE PUNCHED OR SAVED
                     TIMINT       0.083  TIME INTERVAL IN HOURS

*** *** *** *** *** *** *** *** *** *** *** *** *** *** *** *** *** *** *** *** *** *** *** *** *** *** *** *** *** *** *** *** *** ***

              **************
              *            *
166 KK        *    A15     *
              *            *
              **************

168 KO          OUTPUT CONTROL VARIABLES
                      IPRNT           5  PRINT CONTROL
                      IPLOT           0  PLOT CONTROL
                      QSCAL          0.  HYDROGRAPH PLOT SCALE
                      IPNCH           0  PUNCH COMPUTED HYDROGRAPH
                       IOUT          22  SAVE HYDROGRAPH ON THIS UNIT
                      ISAV1           1  FIRST ORDINATE PUNCHED OR SAVED
                      ISAV2          72  LAST ORDINATE PUNCHED OR SAVED
                     TIMINT       0.083  TIME INTERVAL IN HOURS
```

```
*** *** *** *** *** *** *** *** *** *** *** *** *** *** *** *** *** *** *** *** *** *** *** *** *** *** *** *** *** *** *** *** *** ***

            **************
            *            *
172 KK      *   Node53   *
            *            *
            **************

174 KO          OUTPUT CONTROL VARIABLES
                      IPRNT           5  PRINT CONTROL
                      IPLOT           0  PLOT CONTROL
                      QSCAL          0.  HYDROGRAPH PLOT SCALE
                      IPNCH           0  PUNCH COMPUTED HYDROGRAPH
                       IOUT          22  SAVE HYDROGRAPH ON THIS UNIT
                      ISAV1           1  FIRST ORDINATE PUNCHED OR SAVED
                      ISAV2          72  LAST ORDINATE PUNCHED OR SAVED
                     TIMINT       0.083  TIME INTERVAL IN HOURS


*** *** *** *** *** *** *** *** *** *** *** *** *** *** *** *** *** *** *** *** *** *** *** *** *** *** *** *** *** *** *** *** *** ***

            **************
            *            *
176 KK      *    24"     *
            *            *
            **************

178 KO          OUTPUT CONTROL VARIABLES
                      IPRNT           5  PRINT CONTROL
                      IPLOT           0  PLOT CONTROL
                      QSCAL          0.  HYDROGRAPH PLOT SCALE
                      IPNCH           0  PUNCH COMPUTED HYDROGRAPH
                       IOUT          22  SAVE HYDROGRAPH ON THIS UNIT
                      ISAV1           1  FIRST ORDINATE PUNCHED OR SAVED
                      ISAV2          72  LAST ORDINATE PUNCHED OR SAVED
                     TIMINT       0.083  TIME INTERVAL IN HOURS


*** *** *** *** *** *** *** *** *** *** *** *** *** *** *** *** *** *** *** *** *** *** *** *** *** *** *** *** *** *** *** *** *** ***

            **************
            *            *
180 KK      *    24"     *
            *            *
            **************

182 KO          OUTPUT CONTROL VARIABLES
                      IPRNT           5  PRINT CONTROL
                      IPLOT           0  PLOT CONTROL
                      QSCAL          0.  HYDROGRAPH PLOT SCALE
                      IPNCH           0  PUNCH COMPUTED HYDROGRAPH
                       IOUT          22  SAVE HYDROGRAPH ON THIS UNIT
                      ISAV1           1  FIRST ORDINATE PUNCHED OR SAVED
                      ISAV2          72  LAST ORDINATE PUNCHED OR SAVED
                     TIMINT       0.083  TIME INTERVAL IN HOURS


*** *** *** *** *** *** *** *** *** *** *** *** *** *** *** *** *** *** *** *** *** *** *** *** *** *** *** *** *** *** *** *** *** ***

            **************
            *            *
184 KK      *    24"     *
            *            *
            **************

186 KO          OUTPUT CONTROL VARIABLES
                      IPRNT           5  PRINT CONTROL
                      IPLOT           0  PLOT CONTROL
                      QSCAL          0.  HYDROGRAPH PLOT SCALE
                      IPNCH           0  PUNCH COMPUTED HYDROGRAPH
                       IOUT          22  SAVE HYDROGRAPH ON THIS UNIT
```

```
                    ISAV1          1  FIRST ORDINATE PUNCHED OR SAVED
                    ISAV2         72  LAST ORDINATE PUNCHED OR SAVED
                   TIMINT      0.083  TIME INTERVAL IN HOURS

*** *** *** *** *** *** *** *** *** *** *** *** *** *** *** *** *** *** *** *** *** *** *** *** *** *** *** *** *** *** *** *** *** ***

            **************
            *            *
188 KK      *    A6      *
            *            *
            **************

190 KO            OUTPUT CONTROL VARIABLES
                    IPRNT          5  PRINT CONTROL
                    IPLOT          0  PLOT CONTROL
                    QSCAL         0.  HYDROGRAPH PLOT SCALE
                    IPNCH          0  PUNCH COMPUTED HYDROGRAPH
                     IOUT         22  SAVE HYDROGRAPH ON THIS UNIT
                    ISAV1          1  FIRST ORDINATE PUNCHED OR SAVED
                    ISAV2         72  LAST ORDINATE PUNCHED OR SAVED
                   TIMINT      0.083  TIME INTERVAL IN HOURS

*** *** *** *** *** *** *** *** *** *** *** *** *** *** *** *** *** *** *** *** *** *** *** *** *** *** *** *** *** *** *** *** *** ***

            **************
            *            *
194 KK      *    15"     *
            *            *
            **************

196 KO            OUTPUT CONTROL VARIABLES
                    IPRNT          5  PRINT CONTROL
                    IPLOT          0  PLOT CONTROL
                    QSCAL         0.  HYDROGRAPH PLOT SCALE
                    IPNCH          0  PUNCH COMPUTED HYDROGRAPH
                     IOUT         22  SAVE HYDROGRAPH ON THIS UNIT
                    ISAV1          1  FIRST ORDINATE PUNCHED OR SAVED
                    ISAV2         72  LAST ORDINATE PUNCHED OR SAVED
                   TIMINT      0.083  TIME INTERVAL IN HOURS

*** *** *** *** *** *** *** *** *** *** *** *** *** *** *** *** *** *** *** *** *** *** *** *** *** *** *** *** *** *** *** *** *** ***

            **************
            *            *
198 KK      *    A7      *
            *            *
            **************

200 KO            OUTPUT CONTROL VARIABLES
                    IPRNT          5  PRINT CONTROL
                    IPLOT          0  PLOT CONTROL
                    QSCAL         0.  HYDROGRAPH PLOT SCALE
                    IPNCH          0  PUNCH COMPUTED HYDROGRAPH
                     IOUT         22  SAVE HYDROGRAPH ON THIS UNIT
                    ISAV1          1  FIRST ORDINATE PUNCHED OR SAVED
                    ISAV2         72  LAST ORDINATE PUNCHED OR SAVED
                   TIMINT      0.083  TIME INTERVAL IN HOURS

*** *** *** *** *** *** *** *** *** *** *** *** *** *** *** *** *** *** *** *** *** *** *** *** *** *** *** *** *** *** *** *** *** ***

            **************
            *            *
204 KK      *   Node40   *
            *            *
            **************
```

```
206 KO          OUTPUT CONTROL VARIABLES
                      IPRNT           5  PRINT CONTROL
                      IPLOT           0  PLOT CONTROL
                      QSCAL          0.  HYDROGRAPH PLOT SCALE
                      IPNCH           0  PUNCH COMPUTED HYDROGRAPH
                       IOUT          22  SAVE HYDROGRAPH ON THIS UNIT
                      ISAV1           1  FIRST ORDINATE PUNCHED OR SAVED
                      ISAV2          72  LAST ORDINATE PUNCHED OR SAVED
                     TIMINT       0.083  TIME INTERVAL IN HOURS

*** *** *** *** *** *** *** *** *** *** *** *** *** *** *** *** *** *** *** *** *** *** *** *** *** *** *** *** *** *** *** *** *** *** *** ***

          **************
          *            *
208 KK    *    18"     *
          *            *
          **************

210 KO          OUTPUT CONTROL VARIABLES
                      IPRNT           5  PRINT CONTROL
                      IPLOT           0  PLOT CONTROL
                      QSCAL          0.  HYDROGRAPH PLOT SCALE
                      IPNCH           0  PUNCH COMPUTED HYDROGRAPH
                       IOUT          22  SAVE HYDROGRAPH ON THIS UNIT
                      ISAV1           1  FIRST ORDINATE PUNCHED OR SAVED
                      ISAV2          72  LAST ORDINATE PUNCHED OR SAVED
                     TIMINT       0.083  TIME INTERVAL IN HOURS

*** *** *** *** *** *** *** *** *** *** *** *** *** *** *** *** *** *** *** *** *** *** *** *** *** *** *** *** *** *** *** *** *** *** *** ***

          **************
          *            *
212 KK    *    A8      *
          *            *
          **************

214 KO          OUTPUT CONTROL VARIABLES
                      IPRNT           5  PRINT CONTROL
                      IPLOT           0  PLOT CONTROL
                      QSCAL          0.  HYDROGRAPH PLOT SCALE
                      IPNCH           0  PUNCH COMPUTED HYDROGRAPH
                       IOUT          22  SAVE HYDROGRAPH ON THIS UNIT
                      ISAV1           1  FIRST ORDINATE PUNCHED OR SAVED
                      ISAV2          72  LAST ORDINATE PUNCHED OR SAVED
                     TIMINT       0.083  TIME INTERVAL IN HOURS

*** *** *** *** *** *** *** *** *** *** *** *** *** *** *** *** *** *** *** *** *** *** *** *** *** *** *** *** *** *** *** *** *** *** *** ***

          **************
          *            *
218 KK    *    Node42  *
          *            *
          **************

220 KO          OUTPUT CONTROL VARIABLES
                      IPRNT           5  PRINT CONTROL
                      IPLOT           0  PLOT CONTROL
                      QSCAL          0.  HYDROGRAPH PLOT SCALE
                      IPNCH           0  PUNCH COMPUTED HYDROGRAPH
                       IOUT          22  SAVE HYDROGRAPH ON THIS UNIT
                      ISAV1           1  FIRST ORDINATE PUNCHED OR SAVED
                      ISAV2          72  LAST ORDINATE PUNCHED OR SAVED
                     TIMINT       0.083  TIME INTERVAL IN HOURS

*** *** *** *** *** *** *** *** *** *** *** *** *** *** *** *** *** *** *** *** *** *** *** *** *** *** *** *** *** *** *** *** *** *** *** ***
```

```
                 **************
                 *            *
222 KK           *    18"     *
                 *            *
                 **************

224 KO                OUTPUT CONTROL VARIABLES
                            IPRNT           5  PRINT CONTROL
                            IPLOT           0  PLOT CONTROL
                            QSCAL          0.  HYDROGRAPH PLOT SCALE
                            IPNCH           0  PUNCH COMPUTED HYDROGRAPH
                             IOUT          22  SAVE HYDROGRAPH ON THIS UNIT
                            ISAV1           1  FIRST ORDINATE PUNCHED OR SAVED
                            ISAV2          72  LAST ORDINATE PUNCHED OR SAVED
                           TIMINT       0.083  TIME INTERVAL IN HOURS

*** *** *** *** *** *** *** *** *** *** *** *** *** *** *** *** *** *** *** *** *** *** *** *** *** *** *** *** *** *** *** *** *** *** ***

                 **************
                 *            *
226 KK           *    A9      *
                 *            *
                 **************

228 KO                OUTPUT CONTROL VARIABLES
                            IPRNT           5  PRINT CONTROL
                            IPLOT           0  PLOT CONTROL
                            QSCAL          0.  HYDROGRAPH PLOT SCALE
                            IPNCH           0  PUNCH COMPUTED HYDROGRAPH
                             IOUT          22  SAVE HYDROGRAPH ON THIS UNIT
                            ISAV1           1  FIRST ORDINATE PUNCHED OR SAVED
                            ISAV2          72  LAST ORDINATE PUNCHED OR SAVED
                           TIMINT       0.083  TIME INTERVAL IN HOURS

*** *** *** *** *** *** *** *** *** *** *** *** *** *** *** *** *** *** *** *** *** *** *** *** *** *** *** *** *** *** *** *** *** *** ***

                 **************
                 *            *
232 KK           *   Node44   *
                 *            *
                 **************

234 KO                OUTPUT CONTROL VARIABLES
                            IPRNT           5  PRINT CONTROL
                            IPLOT           0  PLOT CONTROL
                            QSCAL          0.  HYDROGRAPH PLOT SCALE
                            IPNCH           0  PUNCH COMPUTED HYDROGRAPH
                             IOUT          22  SAVE HYDROGRAPH ON THIS UNIT
                            ISAV1           1  FIRST ORDINATE PUNCHED OR SAVED
                            ISAV2          72  LAST ORDINATE PUNCHED OR SAVED
                           TIMINT       0.083  TIME INTERVAL IN HOURS

*** *** *** *** *** *** *** *** *** *** *** *** *** *** *** *** *** *** *** *** *** *** *** *** *** *** *** *** *** *** *** *** *** *** ***

                 **************
                 *            *
236 KK           *    21"     *
                 *            *
                 **************

238 KO                OUTPUT CONTROL VARIABLES
                            IPRNT           5  PRINT CONTROL
                            IPLOT           0  PLOT CONTROL
                            QSCAL          0.  HYDROGRAPH PLOT SCALE
                            IPNCH           0  PUNCH COMPUTED HYDROGRAPH
                             IOUT          22  SAVE HYDROGRAPH ON THIS UNIT
                            ISAV1           1  FIRST ORDINATE PUNCHED OR SAVED
```

```
                    ISAV2          72  LAST ORDINATE PUNCHED OR SAVED
                   TIMINT       0.083  TIME INTERVAL IN HOURS


*** *** *** *** *** *** *** *** *** *** *** *** *** *** *** *** *** *** *** *** *** *** *** *** *** *** *** *** *** *** *** *** *** ***

            **************
            *            *
240 KK      *    A16     *
            *            *
            **************

242 KO          OUTPUT CONTROL VARIABLES
                      IPRNT           5  PRINT CONTROL
                      IPLOT           0  PLOT CONTROL
                      QSCAL          0.  HYDROGRAPH PLOT SCALE
                      IPNCH           0  PUNCH COMPUTED HYDROGRAPH
                       IOUT          22  SAVE HYDROGRAPH ON THIS UNIT
                      ISAV1           1  FIRST ORDINATE PUNCHED OR SAVED
                      ISAV2          72  LAST ORDINATE PUNCHED OR SAVED
                     TIMINT       0.083  TIME INTERVAL IN HOURS


*** *** *** *** *** *** *** *** *** *** *** *** *** *** *** *** *** *** *** *** *** *** *** *** *** *** *** *** *** *** *** *** *** ***

            **************
            *            *
246 KK      *   Node46   *
            *            *
            **************

248 KO          OUTPUT CONTROL VARIABLES
                      IPRNT           5  PRINT CONTROL
                      IPLOT           0  PLOT CONTROL
                      QSCAL          0.  HYDROGRAPH PLOT SCALE
                      IPNCH           0  PUNCH COMPUTED HYDROGRAPH
                       IOUT          22  SAVE HYDROGRAPH ON THIS UNIT
                      ISAV1           1  FIRST ORDINATE PUNCHED OR SAVED
                      ISAV2          72  LAST ORDINATE PUNCHED OR SAVED
                     TIMINT       0.083  TIME INTERVAL IN HOURS


*** *** *** *** *** *** *** *** *** *** *** *** *** *** *** *** *** *** *** *** *** *** *** *** *** *** *** *** *** *** *** *** *** ***

            **************
            *            *
250 KK      *   Pond A   *
            *            *
            **************

252 KO          OUTPUT CONTROL VARIABLES
                      IPRNT           5  PRINT CONTROL
                      IPLOT           0  PLOT CONTROL
                      QSCAL          0.  HYDROGRAPH PLOT SCALE
                      IPNCH           0  PUNCH COMPUTED HYDROGRAPH
                       IOUT          22  SAVE HYDROGRAPH ON THIS UNIT
                      ISAV1           1  FIRST ORDINATE PUNCHED OR SAVED
                      ISAV2          72  LAST ORDINATE PUNCHED OR SAVED
                     TIMINT       0.083  TIME INTERVAL IN HOURS


*** *** *** *** *** *** *** *** *** *** *** *** *** *** *** *** *** *** *** *** *** *** *** *** *** *** *** *** *** *** *** *** *** ***

            **************
            *            *
258 KK      *    B1      *
            *            *
            **************
```

```
260 KO          OUTPUT CONTROL VARIABLES
                      IPRNT           5  PRINT CONTROL
                      IPLOT           0  PLOT CONTROL
                      QSCAL          0.  HYDROGRAPH PLOT SCALE
                      IPNCH           0  PUNCH COMPUTED HYDROGRAPH
                       IOUT          22  SAVE HYDROGRAPH ON THIS UNIT
                      ISAV1           1  FIRST ORDINATE PUNCHED OR SAVED
                      ISAV2          72  LAST ORDINATE PUNCHED OR SAVED
                     TIMINT       0.083  TIME INTERVAL IN HOURS

*** *** *** *** *** *** *** *** *** *** *** *** *** *** *** *** *** *** *** *** *** *** *** *** *** *** *** *** *** *** *** *** *** ***

            **************
            *            *
264 KK      *    15"     *
            *            *
            **************

266 KO          OUTPUT CONTROL VARIABLES
                      IPRNT           5  PRINT CONTROL
                      IPLOT           0  PLOT CONTROL
                      QSCAL          0.  HYDROGRAPH PLOT SCALE
                      IPNCH           0  PUNCH COMPUTED HYDROGRAPH
                       IOUT          22  SAVE HYDROGRAPH ON THIS UNIT
                      ISAV1           1  FIRST ORDINATE PUNCHED OR SAVED
                      ISAV2          72  LAST ORDINATE PUNCHED OR SAVED
                     TIMINT       0.083  TIME INTERVAL IN HOURS

*** *** *** *** *** *** *** *** *** *** *** *** *** *** *** *** *** *** *** *** *** *** *** *** *** *** *** *** *** *** *** *** *** ***

            **************
            *            *
268 KK      *    B2      *
            *            *
            **************

270 KO          OUTPUT CONTROL VARIABLES
                      IPRNT           5  PRINT CONTROL
                      IPLOT           0  PLOT CONTROL
                      QSCAL          0.  HYDROGRAPH PLOT SCALE
                      IPNCH           0  PUNCH COMPUTED HYDROGRAPH
                       IOUT          22  SAVE HYDROGRAPH ON THIS UNIT
                      ISAV1           1  FIRST ORDINATE PUNCHED OR SAVED
                      ISAV2          72  LAST ORDINATE PUNCHED OR SAVED
                     TIMINT       0.083  TIME INTERVAL IN HOURS

*** *** *** *** *** *** *** *** *** *** *** *** *** *** *** *** *** *** *** *** *** *** *** *** *** *** *** *** *** *** *** *** *** ***

            **************
            *            *
274 KK      *    Node60  *
            *            *
            **************

276 KO          OUTPUT CONTROL VARIABLES
                      IPRNT           5  PRINT CONTROL
                      IPLOT           0  PLOT CONTROL
                      QSCAL          0.  HYDROGRAPH PLOT SCALE
                      IPNCH           0  PUNCH COMPUTED HYDROGRAPH
                       IOUT          22  SAVE HYDROGRAPH ON THIS UNIT
                      ISAV1           1  FIRST ORDINATE PUNCHED OR SAVED
                      ISAV2          72  LAST ORDINATE PUNCHED OR SAVED
                     TIMINT       0.083  TIME INTERVAL IN HOURS

*** *** *** *** *** *** *** *** *** *** *** *** *** *** *** *** *** *** *** *** *** *** *** *** *** *** *** *** *** *** *** *** *** ***
```

```
                 **************
                 *            *
278 KK           *   Pond B   *
                 *            *
                 **************

280 KO                OUTPUT CONTROL VARIABLES
                            IPRNT           5  PRINT CONTROL
                            IPLOT           0  PLOT CONTROL
                            QSCAL          0.  HYDROGRAPH PLOT SCALE
                            IPNCH           0  PUNCH COMPUTED HYDROGRAPH
                             IOUT          22  SAVE HYDROGRAPH ON THIS UNIT
                            ISAV1           1  FIRST ORDINATE PUNCHED OR SAVED
                            ISAV2          72  LAST ORDINATE PUNCHED OR SAVED
                           TIMINT       0.083  TIME INTERVAL IN HOURS

*** *** *** *** *** *** *** *** *** *** *** *** *** *** *** *** *** *** *** *** *** *** *** *** *** *** *** *** *** *** *** *** *** *** ***

                 **************
                 *            *
286 KK           *   OFF2     *
                 *            *
                 **************

288 KO                OUTPUT CONTROL VARIABLES
                            IPRNT           5  PRINT CONTROL
                            IPLOT           0  PLOT CONTROL
                            QSCAL          0.  HYDROGRAPH PLOT SCALE
                            IPNCH           0  PUNCH COMPUTED HYDROGRAPH
                             IOUT          22  SAVE HYDROGRAPH ON THIS UNIT
                            ISAV1           1  FIRST ORDINATE PUNCHED OR SAVED
                            ISAV2          72  LAST ORDINATE PUNCHED OR SAVED
                           TIMINT       0.083  TIME INTERVAL IN HOURS

*** *** *** *** *** *** *** *** *** *** *** *** *** *** *** *** *** *** *** *** *** *** *** *** *** *** *** *** *** *** *** *** *** *** ***

                 **************
                 *            *
292 KK           *   24"      *
                 *            *
                 **************

294 KO                OUTPUT CONTROL VARIABLES
                            IPRNT           5  PRINT CONTROL
                            IPLOT           0  PLOT CONTROL
                            QSCAL          0.  HYDROGRAPH PLOT SCALE
                            IPNCH           0  PUNCH COMPUTED HYDROGRAPH
                             IOUT          22  SAVE HYDROGRAPH ON THIS UNIT
                            ISAV1           1  FIRST ORDINATE PUNCHED OR SAVED
                            ISAV2          72  LAST ORDINATE PUNCHED OR SAVED
                           TIMINT       0.083  TIME INTERVAL IN HOURS

*** *** *** *** *** *** *** *** *** *** *** *** *** *** *** *** *** *** *** *** *** *** *** *** *** *** *** *** *** *** *** *** *** *** ***

                 **************
                 *            *
296 KK           *   OFF1     *
                 *            *
                 **************

298 KO                OUTPUT CONTROL VARIABLES
                            IPRNT           5  PRINT CONTROL
                            IPLOT           0  PLOT CONTROL
                            QSCAL          0.  HYDROGRAPH PLOT SCALE
                            IPNCH           0  PUNCH COMPUTED HYDROGRAPH
                             IOUT          22  SAVE HYDROGRAPH ON THIS UNIT
                            ISAV1           1  FIRST ORDINATE PUNCHED OR SAVED
                            ISAV2          72  LAST ORDINATE PUNCHED OR SAVED
```

```
                    TIMINT       0.083  TIME INTERVAL IN HOURS

*** *** *** *** *** *** *** *** *** *** *** *** *** *** *** *** *** *** *** *** *** *** *** *** *** *** *** *** *** *** *** *** *** ***

            **************
            *            *
302 KK      *    Node62  *
            *            *
            **************

304 KO          OUTPUT CONTROL VARIABLES
                      IPRNT           5  PRINT CONTROL
                      IPLOT           0  PLOT CONTROL
                      QSCAL          0.  HYDROGRAPH PLOT SCALE
                      IPNCH           0  PUNCH COMPUTED HYDROGRAPH
                       IOUT          22  SAVE HYDROGRAPH ON THIS UNIT
                      ISAV1           1  FIRST ORDINATE PUNCHED OR SAVED
                      ISAV2          72  LAST ORDINATE PUNCHED OR SAVED
                     TIMINT       0.083  TIME INTERVAL IN HOURS

*** *** *** *** *** *** *** *** *** *** *** *** *** *** *** *** *** *** *** *** *** *** *** *** *** *** *** *** *** *** *** *** *** ***

            **************
            *            *
306 KK      *    OFF3    *
            *            *
            **************

308 KO          OUTPUT CONTROL VARIABLES
                      IPRNT           5  PRINT CONTROL
                      IPLOT           0  PLOT CONTROL
                      QSCAL          0.  HYDROGRAPH PLOT SCALE
                      IPNCH           0  PUNCH COMPUTED HYDROGRAPH
                       IOUT          22  SAVE HYDROGRAPH ON THIS UNIT
                      ISAV1           1  FIRST ORDINATE PUNCHED OR SAVED
                      ISAV2          72  LAST ORDINATE PUNCHED OR SAVED
                     TIMINT       0.083  TIME INTERVAL IN HOURS

*** *** *** *** *** *** *** *** *** *** *** *** *** *** *** *** *** *** *** *** *** *** *** *** *** *** *** *** *** *** *** *** *** ***

            **************
            *            *
312 KK      *    Node9   *
            *            *
            **************

314 KO          OUTPUT CONTROL VARIABLES
                      IPRNT           5  PRINT CONTROL
                      IPLOT           0  PLOT CONTROL
                      QSCAL          0.  HYDROGRAPH PLOT SCALE
                      IPNCH           0  PUNCH COMPUTED HYDROGRAPH
                       IOUT          22  SAVE HYDROGRAPH ON THIS UNIT
                      ISAV1           1  FIRST ORDINATE PUNCHED OR SAVED
                      ISAV2          72  LAST ORDINATE PUNCHED OR SAVED
                     TIMINT       0.083  TIME INTERVAL IN HOURS
```

RUNOFF SUMMARY
FLOW IN CUBIC FEET PER SECOND
TIME IN HOURS, AREA IN SQUARE MILES

OPERATION	STATION	PEAK FLOW	TIME OF PEAK	AVERAGE FLOW FOR MAXIMUM PERIOD 6-HOUR	24-HOUR	72-HOUR	BASIN AREA	MAXIMUM STAGE	TIME OF MAX STAGE
HYDROGRAPH AT	A1	6.	3.00	0.	0.	0.	0.00		
ROUTED TO	Pnd A1	6.	3.00	0.	0.	0.	0.00	89.07	3.00
ROUTED TO	15"	6.	3.00	0.	0.	0.	0.00		
HYDROGRAPH AT	A2	11.	3.00	1.	1.	1.	0.00		
2 COMBINED AT	Node35	17.	3.00	1.	1.	1.	0.01		
ROUTED TO	Pnd A2	16.	3.00	1.	1.	1.	0.01	87.06	3.00
ROUTED TO	18"	16.	3.00	1.	1.	1.	0.01		
HYDROGRAPH AT	A3	5.	3.00	0.	0.	0.	0.00		
2 COMBINED AT	Node36	21.	3.00	1.	1.	1.	0.01		
ROUTED TO	Pnd A3	21.	3.00	1.	1.	1.	0.01	87.00	3.00
ROUTED TO	18"	20.	3.00	1.	1.	1.	0.01		
HYDROGRAPH AT	A4	5.	3.00	0.	0.	0.	0.00		
2 COMBINED AT	Node37	25.	3.00	2.	2.	2.	0.01		
ROUTED TO	Pnd A4	25.	3.00	2.	2.	2.	0.01	86.15	3.00
ROUTED TO	18"	24.	3.00	2.	2.	2.	0.01		
HYDROGRAPH AT	A5	5.	3.00	0.	0.	0.	0.00		
2 COMBINED AT	Node38	29.	3.00	2.	2.	2.	0.01		
ROUTED TO	Pnd A5	29.	3.00	2.	2.	2.	0.01	85.97	3.00
ROUTED TO	Node34	29.	3.00	2.	2.	2.	0.01		
HYDROGRAPH AT	A10	3.	3.00	0.	0.	0.	0.00		
ROUTED TO	12"	3.	3.00	0.	0.	0.	0.00		
ROUTED TO	15"	3.	3.00	0.	0.	0.	0.00		

HYDROGRAPH AT	A11	9.	3.00	1.	1.	1.	0.00		
2 COMBINED AT	Node48	12.	3.00	1.	1.	1.	0.00		
ROUTED TO	18"	11.	3.00	1.	1.	1.	0.00		
HYDROGRAPH AT	A12	2.	3.00	0.	0.	0.	0.00		
HYDROGRAPH AT	A13	9.	3.00	1.	1.	1.	0.00		
3 COMBINED AT	Node51	22.	3.00	2.	2.	2.	0.01		
ROUTED TO	24"	21.	3.00	2.	2.	2.	0.01		
HYDROGRAPH AT	A14	2.	3.00	0.	0.	0.	0.00		
HYDROGRAPH AT	A15	6.	3.00	0.	0.	0.	0.00		
3 COMBINED AT	Node53	28.	3.00	2.	2.	2.	0.01		
ROUTED TO	24"	27.	3.00	2.	2.	2.	0.01		
ROUTED TO	24"	26.	3.00	2.	2.	2.	0.01		
ROUTED TO	24"	25.	3.00	2.	2.	2.	0.01		
HYDROGRAPH AT	A6	8.	3.00	0.	0.	0.	0.00		
ROUTED TO	15"	8.	3.00	0.	0.	0.	0.00		
HYDROGRAPH AT	A7	4.	3.00	0.	0.	0.	0.00		
2 COMBINED AT	Node40	11.	3.00	1.	1.	1.	0.00		
ROUTED TO	18"	11.	3.00	1.	1.	1.	0.00		
HYDROGRAPH AT	A8	4.	3.00	0.	0.	0.	0.00		
2 COMBINED AT	Node42	15.	3.00	1.	1.	1.	0.00		
ROUTED TO	18"	14.	3.00	1.	1.	1.	0.00		
HYDROGRAPH AT	A9	3.	3.00	0.	0.	0.	0.00		
2 COMBINED AT	Node44	17.	3.00	1.	1.	1.	0.01		
ROUTED TO	21"	17.	3.00	1.	1.	1.	0.01		
HYDROGRAPH AT	A16	3.	3.00	0.	0.	0.	0.00		
4 COMBINED AT	Node46	74.	3.00	5.	5.	5.	0.03		
ROUTED TO	Pond A	16.	3.33	5.	5.	5.	0.03	87.20	3.33

HYDROGRAPH AT	B1	5.	3.00	0.	0.	0.	0.00		
ROUTED TO	15"	4.	3.00	0.	0.	0.	0.00		
HYDROGRAPH AT	B2	11.	3.00	1.	1.	1.	0.00		
2 COMBINED AT	Node60	15.	3.00	1.	1.	1.	0.01		
ROUTED TO	Pond B	8.	3.17	1.	1.	1.	0.01	81.52	3.17
HYDROGRAPH AT	OFF2	6.	3.08	1.	1.	1.	0.00		
ROUTED TO	24"	6.	3.08	1.	1.	1.	0.00		
HYDROGRAPH AT	OFF1	3.	3.08	0.	0.	0.	0.00		
2 COMBINED AT	Node62	9.	3.08	1.	1.	1.	0.00		
HYDROGRAPH AT	OFF3	4.	3.08	0.	0.	0.	0.00		
4 COMBINED AT	Node9	36.	3.08	7.	7.	7.	0.04		

SUMMARY OF KINEMATIC WAVE - MUSKINGUM-CUNGE ROUTING
(FLOW IS DIRECT RUNOFF WITHOUT BASE FLOW)

ISTAQ	ELEMENT	DT	PEAK	TIME TO PEAK	VOLUME	INTERPOLATED TO COMPUTATION INTERVAL DT	PEAK	TIME TO PEAK	VOLUME
		(MIN)	(CFS)	(MIN)	(IN)	(MIN)	(CFS)	(MIN)	(IN)
15"	MANE	0.73	5.88	181.07	1.67	5.00	5.61	180.00	1.67

CONTINUITY SUMMARY (AC-FT) - INFLOW=0.1779E+00 EXCESS=0.0000E+00 OUTFLOW=0.1778E+00 BASIN STORAGE=0.1479E-03 PERCENT ERROR= 0.0

18"	MANE	0.28	16.27	180.24	1.67	5.00	16.05	180.00	1.67

CONTINUITY SUMMARY (AC-FT) - INFLOW=0.4985E+00 EXCESS=0.0000E+00 OUTFLOW=0.4984E+00 BASIN STORAGE=0.1637E-03 PERCENT ERROR= 0.0

18"	MANE	0.24	20.55	180.20	1.75	5.00	20.35	180.00	1.75

CONTINUITY SUMMARY (AC-FT) - INFLOW=0.6539E+00 EXCESS=0.0000E+00 OUTFLOW=0.6537E+00 BASIN STORAGE=0.1773E-03 PERCENT ERROR= 0.0

18"	MANE	0.26	24.77	180.39	1.81	5.00	24.48	180.00	1.81

CONTINUITY SUMMARY (AC-FT) - INFLOW=0.8092E+00 EXCESS=0.0000E+00 OUTFLOW=0.8089E+00 BASIN STORAGE=0.2294E-03 PERCENT ERROR= 0.0

Node34	MANE	0.16	28.94	180.23	1.84	5.00	28.78	180.00	1.84

CONTINUITY SUMMARY (AC-FT) - INFLOW=0.9643E+00 EXCESS=0.0000E+00 OUTFLOW=0.9642E+00 BASIN STORAGE=0.1607E-03 PERCENT ERROR= 0.0

12"	MANE	0.23	2.72	180.21	1.67	5.00	2.68	180.00	1.67

CONTINUITY SUMMARY (AC-FT) - INFLOW=0.8008E-01 EXCESS=0.0000E+00 OUTFLOW=0.8006E-01 BASIN STORAGE=0.1933E-04 PERCENT ERROR= 0.0

15"	MANE	0.30	2.62	180.17	1.67	5.00	2.59	180.00	1.67

CONTINUITY SUMMARY (AC-FT) - INFLOW=0.8015E-01 EXCESS=0.0000E+00 OUTFLOW=0.8012E-01 BASIN STORAGE=0.2537E-04 PERCENT ERROR= 0.0

18"	MANE	0.58	11.22	180.70	2.06	5.00	11.04	180.00	2.06

CONTINUITY SUMMARY (AC-FT) - INFLOW=0.3843E+00 EXCESS=0.0000E+00 OUTFLOW=0.3840E+00 BASIN STORAGE=0.1991E-03 PERCENT ERROR= 0.0

24"	MANE	0.47	21.42	180.64	2.06	5.00	21.17	180.00	2.06

CONTINUITY SUMMARY (AC-FT) - INFLOW=0.7481E+00 EXCESS=0.0000E+00 OUTFLOW=0.7476E+00 BASIN STORAGE=0.3129E-03 PERCENT ERROR= 0.0

24"	MANE	0.58	27.15	180.33	2.06	5.00	26.66	180.00	2.06

CONTINUITY SUMMARY (AC-FT) - INFLOW=0.9796E+00 EXCESS=0.0000E+00 OUTFLOW=0.9786E+00 BASIN STORAGE=0.5087E-03 PERCENT ERROR= 0.0

24"	MANE	0.36	26.01	180.57	2.06	5.00	25.71	180.00	2.06

CONTINUITY SUMMARY (AC-FT) - INFLOW=0.9793E+00 EXCESS=0.0000E+00 OUTFLOW=0.9788E+00 BASIN STORAGE=0.3160E-03 PERCENT ERROR= 0.0

24"	MANE	0.36	25.34	180.58	2.06	5.00	24.89	180.00	2.06

CONTINUITY SUMMARY (AC-FT) - INFLOW=0.9791E+00 EXCESS=0.0000E+00 OUTFLOW=0.9788E+00 BASIN STORAGE=0.3071E-03 PERCENT ERROR= 0.0

```
          15"     MANE        0.36      7.77    180.35      1.67      5.00      7.65    180.00        1.67

CONTINUITY SUMMARY (AC-FT) - INFLOW=0.2313E+00 EXCESS=0.0000E+00 OUTFLOW=0.2313E+00 BASIN STORAGE=0.8746E-04 PERCENT ERROR=    0.0

          18"     MANE        0.30     11.12    180.26      1.67      5.00     10.98    180.00        1.67

CONTINUITY SUMMARY (AC-FT) - INFLOW=0.3383E+00 EXCESS=0.0000E+00 OUTFLOW=0.3382E+00 BASIN STORAGE=0.1064E-03 PERCENT ERROR=    0.0

          18"     MANE        0.32     14.33    180.52      1.67      5.00     14.14    180.00        1.67

CONTINUITY SUMMARY (AC-FT) - INFLOW=0.4454E+00 EXCESS=0.0000E+00 OUTFLOW=0.4452E+00 BASIN STORAGE=0.1508E-03 PERCENT ERROR=    0.0

          21"     MANE        0.19     17.29    180.19      1.67      5.00     17.19    180.00        1.67

CONTINUITY SUMMARY (AC-FT) - INFLOW=0.5433E+00 EXCESS=0.0000E+00 OUTFLOW=0.5432E+00 BASIN STORAGE=0.1057E-03 PERCENT ERROR=    0.0

          15"     MANE        0.38      4.49    180.53      1.67      5.00      4.39    180.00        1.67

CONTINUITY SUMMARY (AC-FT) - INFLOW=0.1335E+00 EXCESS=0.0000E+00 OUTFLOW=0.1334E+00 BASIN STORAGE=0.5432E-04 PERCENT ERROR=    0.0

          24"     MANE        1.15      6.32    186.86      1.66      5.00      6.13    185.00        1.66

CONTINUITY SUMMARY (AC-FT) - INFLOW=0.2486E+00 EXCESS=0.0000E+00 OUTFLOW=0.2482E+00 BASIN STORAGE=0.2985E-03 PERCENT ERROR=    0.0


*** NORMAL END OF HEC-1 ***
```

Appendix C

MASTER DRAINAGE PLAN

for the

ATRISCO BUSINESS PARK

SEPTEMBER 1992

REVISED

MARCH 1993
OCTOBER 1993

PREPARED FOR:

SUNWEST BANK
SPECIAL ASSETS DEPARTMENT
303 Roma Avenue, N.W.
Albuquerque, New Mexico 87102

PREPARED BY:

Easterling & Associates, Inc.
10131 Coors Road, N.W.
Suite II-7
Albuquerque, NM 87114-4048

I, Charles M. Easterling, do hereby certify that this report and all revisions included herein were prepared by me or under my direction and that I am a duly registered Professional Engineer under the laws of the State of New Mexico.

Charles M. Easterling, P.E.
NMPE No. 6411

Oct 22, 1993
Date

TABLE OF CONTENTS

Page

I. GENERAL 1
- A. Purpose and Authorization 1
- B. Description of the Plan Area 1
- C. Methodology for Analysis 2
- D. Responsibility for Infrastructure 2

II. TIERRA BAYITA STORM DRAIN WATERSHED 2
- A. Background Information 2
  - 1. Existing Constraints 2
  - 2. Previous Studies 3
- B. Drainage Schemes 4
  - 1. Interim Condition 4
  - 2. Fully Developed Condition 4
- C. Developed Condition Constraints 5

III. COORS CONNECTION STORM DRAIN WATERSHED 6
- A. Background Information 6
  - 1. Existing Constraints 6
  - 2. Previous Studies 7
- B. Drainage Schemes 8
- C. Developed Condition Drainage Constraints 10
  - 1. Onsite Watershed 10
  - 2. Offsite Watershed 11

FIGURES

Figure 1 – Location Map
~~Figure 2 – Schematic Drawing of Connection to Tierra Bayita Storm Drain~~
Figure 3 – F.E.M.A. Flood Plain Map

APPENDIX

APPENDIX A – AHYMO SUMMARY TABLES
1. Tierra Bayita Storm Drain Watershed
2. Coors Connection Storm Drain Watershed

APPENDIX B – AHYMO INPUT DATA
1. Tierra Bayita Storm Drain Watershed
2. Coors Connection Storm Drain Watershed

~~APPENDIX C – CONSERVATION TREATMENT PLAN~~

PLATES

Plate 1 – Overall Drainage Plan, Interim Condition
Plate 2 – Overall Drainage Plan, Fully Developed Condition
Plate 3 – Conceptual Grading and Drainage Plan (2.5 & 10 Acre Sites)
Plate 4 – Conceptual Grading and Drainage Plan (20 Acre Site)
Plate 5 – ~~Conservation Treatment Plan (Alternate A)~~ *Tracts "S-1" and "M," Unit 2, Interim Drainage Treatment Plan Sheet 1*
Plate 6 – ~~Conservation Treatment Plan (Alternate B)~~ *Tracts "S-1" and "M," Unit 2, Interim Drainage Treatment Plan Sheet 2*

INTRODUCTION

This is an updated version of the Master Drainage Plan for the Atrisco Business Park. Since the time that the March 1993 version was approved, some of the planned facilities have been constructed and the concepts for other facilities have changed. The purpose of this revision is to update the plan to reflect these changes.

Changes found in this revision include the following:

Coors connection Storm Drain Watershed

- *The area of required conservation treatment has been reduced.*
- *The conservation treatment plan has been modified.*
- *The proposed Conservation Treatment for Tract "M," Unit 2 consists of perimeter dikes only.*
- *Airport Drive Storm Drain and Airport Drive Storm Drain Outfall are constructed.*

Tierra Bayita Storm Drain Watershed

- *The proposed Unser Diversion has been modified from sedimentation/detention ponds with a lined channel outfall to a series of ponds connected by storm drains with a storm drain outfall.*
- *The design outflow from the Unser Diversion is reduced; therefore it is no longer routed through the S.A.D. 214 Pond.*
- *The design inflow to the S.A.D. 214 Pond is reduced; therefore the need for conservation treatment in the 214 Pond watershed has been eliminated. The need for the S.A.D. 214 Pond to be expanded is greatly reduced. Modifications to the pond to convert it from a retention facility to a detention facility are required to serve the developed condition. The proposed pond modification to be constructed with the Tierra Bayita Storm Drain will result in a small increase in pond volume.*
- *The AHYMO model of the watershed has been updated to incorporate the changes noted above. The data tables have been updated to reflect the revised output from the updated model.*

ATRISCO BUSINESS PARK
MASTER DRAINAGE PLAN

I. GENERAL

A. Purpose and Authorization

This document has been prepared by Easterling & Associates, Inc. under contract to Sunwest Bank. Its purpose is to provide a drainage solution conducive to removal of the Flood Plain included in the subject area and to provide drainage criteria for subsequent development in the area.

B. Description of the Plan Area

Drainage areas which are discussed in this plan are illustrated in Figure 1. The focus of this plan is on the tracts of land identified as the onsite watershed in Figure 1. The onsite watershed more specifically includes the following tracts of land within the Atrisco Business Park; Unit 2 Subdivision:

Parcel	Acres
Tract T	40.5
Lot 2	33.1
Parcel A–1	26.1
Parcel C	28.6
Tract M	88.1
Tract L–1	4.5
Tract S–1	133.2
Total	354.1

In addition to the onsite area, an offsite area of approximately 794 acres contributes flow either directly to the onsite area or to proposed drainage outfalls for the onsite area. These offsite areas are illustrated on Figure 1. These offsite areas were included in the analysis performed for this plan for the purpose of verifying capacity in existing and proposed storm drainage facilities and equitably distributing the system capacity throughout the watershed. This document is not intended to serve as a master plan for these offsite areas but does identify potential storm water discharge constraints for these areas.

In the existing condition there is no outfall for storm water generated upstream of or on the onsite area. Much of this flow sheet flows across the property and eventually is ponded in natural depressions located in the onsite area. Due to this, a portion of the area is within a 100 Year FEMA Flood Plain as shown on Figure 3. This plan proposes to divide this area into two watersheds as shown on Figure 1. The dividing line is primarily the east right–of–way line of Unser

Boulevard. The west watershed will outfall to the future Tierra Bayita Storm Drain in Unser Boulevard. This watershed includes parcel A–1 located east of Unser Boulevard. The east watershed will outfall to the existing North/South Coors Connection Storm Drain via the future Airport Drive Storm Drain *(Constructed in 1993)*. Both of the outfalls identified here outfall to the Amole del Norte Channel.

C. Methodology for Analysis

Hydrologic analysis was performed based on the August 1991, Section 22.2, Volume 2, DPM Drainage Criteria for the City of Albuquerque. Hydrologic Modeling was performed utilizing AMAFCA's AHYMO, March 1992 version. Model runs for the 100 year and 10 year storms were performed in order to verify street capacities and satisfy drainage ordinance criteria. A copy of the model input data is included in Appendix B of this report. Output summary tables are included in Appendix A.

Flow depths in the streets were determined from D.P.M. nomographs for street flow where typical street sections were analyzed and from Manning equation elsewhere.

D. Responsibility for Infrastructure

All of the land in the onsite watershed is included in the 1992 "Atrisco Business Park Master Development Plan for IP Uses." Developer responsibilities and phasing for future infrastructure construction are defined in the Master Development Plan.

II. TIERRA BAYITA STORM DRAIN WATERSHED

A. Background Information

The existing condition watershed is primarily undeveloped as shown by the photo based background on Plates 1 and 2. Existing street and drainage improvements within the onsite watershed were constructed by S.A.D. 214. These improvements include a portion of Unser Boulevard, a portion of Bluewater Road, a storm drain in Unser Boulevard, and a 9.5 ac–ft retention pond located on Tract A–1.

1. Existing Constraints

- Development of the property requires drainage improvements to be constructed along the western edge of the Business Park to intercept the flows from the large offsite watershed located west of the Business Park.

- Discharge of flow from the property limited in volume by lack of a drainage outfall from the area and in rate by the size of the existing Unser Storm Drain.

- F.E.M.A. Flood Plain covers a portion of the area.

2. Previous Studies

Several previous studies have been prepared which have referenced this watershed. The previous studies which have pertinence to the drainage plan proposed here are listed and discussed below.

a. Drainage Plan for the Design of S.A.D. 214 Unser Boulevard by Scanlon and Associates dated February 14, 1983.

- Established discharge criteria for property discharging into the Unser Storm Drain.

b. West Bluff Drainage Plan Phase III by Andrews, Asbury, and Roberts, Inc. dated January 1987.

- Delineated the boundaries of the offsite watershed.

- Proposed the I–40 interceptor channel be constructed north of I-40. This project which will reduce the size of the offsite watershed.

- Proposed the Unser Diversion Channel be constructed along the western and southern boundaries of the Business Park to intercept flow from the offsite watershed to the west and convey it to Unser Boulevard.

- Proposed flow from the Unser Diversion Channel and the Unser Storm Drain be conveyed in a storm drain facility down Unser Boulevard from the south boundary of the Business Park to the Amole del Norte Channel.

c. Preliminary Analysis Report for Amole del Norte Storm Diversion Facilities/Tierra Bayita Drainage Facilities by Greiner, Inc. dated October 31, 1990.

- Proposed expansion and conversion of the existing S.A.D. 214 pond from a 9.5 ac–ft retention pond to a permanent 19 ac–ft detention pond.

The design concept analyzed in the report assumed the flow from the Unser Diversion would be routed through the S.A.D. 214

Pond. The current plan for the Unser Diversion makes this routing unnecessary. Thus, the pond volume expansion is also unnecessary. Conversion to a detention pond is required in the current drainage plan.

- Established the design flow rate for the S.A.D. 214 pond outfall (the Tierra Bayita Storm Drain) in Unser Boulevard at 311 cfs.

B. Drainage Schemes

Plates 1 and 2 illustrate the drainage schemes for the interim and the fully developed conditions in the watershed.

1. Interim Condition

The interim condition illustrated on Plate 1 shows the facilities required to remove the FEMA Flood Plain from the onsite watershed. These facilities include:

- The Unser Diversion ~~Channel,~~ a series of collection facilities and detention/retention/sedimentation ponds to be located along the western boundary of the Atrisco Business Park. These facilities will collect and treat runoff from the offsite watershed located north and west of the Business Park.

- ~~Expansion of the S.A.D. 214 Pond to 21.0 ac-ft capacity.~~

- ~~The Tierra Bayita Storm Drain Outfall or temporary facilities to retain runoff from the watershed. Specific information regarding these facilities will be provided in the Design Analysis Report for Unser Diversion Channel.~~

- ~~Conservation treatment and/or desiltation basins in portions of the undeveloped watershed to reduce sediment load and peak flow rates contributed to the drainage facilities.~~

2. Fully Developed Condition

The Fully Developed condition illustrated on Plate 2 shows the watershed in the fully developed condition and assumes the I-40 Interceptor will be constructed. The public drainage infrastructure requirements ~~are essentially the same as noted for the Interim Condition except that the Tierra Bayita storm will be required to support this level of development.~~ *include:*

- *The Tierra Bayita Storm Drain in Unser Boulevard to provide an outfall for the S.A.D. 214 Pond and the Unser Diversion.*

- *Modification of the S.A.D. 214 Pond to convert it from a retention facility to a detention facility.*

C. <u>Developed Condition Constraints</u>

- Lots discharging flow to the existing Unser Storm Drain must control peak flow rates to those established by the Drainage Plan for the Design of S.A.D. 214 Unser Boulevard, by Scanlon & Associates dated February 14, 1983.

- A master drainage plan should be developed for the watershed west of the Unser Diversion ~~Channel~~ prior to discharge of developed flow from that area. This future drainage plan should determine allowable release rates from the area based on downstream capacity. ~~The analysis performed for this report indicates the maximum allowable discharge from the gross area is 1.3 cfs/Ac.~~ *The "Agreement for Atrisco Business Park Storm Water Improvements", filed with the City of Albuquerque Clerk's office on August 25, 1993 as document #93093160, establishes the discharge constraint for this property to not be less than 1.3 cfs/acre.* A higher discharge rate may be possible depending upon how drainage facilities are configured within the area. *The modeling performed for this plan assumed flow rates from the developed condition Unser Diversion Watershed of 2.2 to 2.5 cfs per acre. A multiple basin detention facility is very sensitive to the timing of inflow, therefore, future detailed drainage planning for the developed condition Unser Diversion Watershed should include modeling of the entire Unser Diversion System and Watershed.*

- ~~Peak 100 year flow rates from lot 1, Unit 2, Atrisco Business Park are restricted to a maximum of 1.3 cfs per acre.~~

- Lot ~~1~~ 2, Unit 2 is allowed free discharge into the ~~Channel~~ *Storm Drain.*

- Parcel A-1 *and Lot 1*, Unit 2 is *are* allowed free discharge into the ~~expander~~ *modified* S.A.D. 214 pond.

- Peak 100 year flow rates corresponding to the above criteria are noted on Plate 2.

- ~~The Unser Diversion Channel should be routed directly to the Tierra Bayita Storm Drain with excess flow routed to the expanded S.A.D. 214 Pond in order to accommodate the 100 year peak allowable discharge rates noted above. Modeling demonstrated that due to the wide peak in~~

~~the hydrograph created by detention in the upstream watershed, 21.0 ac-ft is not sufficient volume to control outflow from the S.A.D. 214 Pond to 311 cfs (the design capacity of the future outfall) if conventional reservoir routing is used. A schematic drawing Figure 2 illustrates a possible configuration of the connection to the Tierra Bayita Storm Drain. This configuration is beneficial in that the full capacity of the storm drain can be utilized earlier in the storm than normal routing through the pond would allow.~~

- *In regard to the S.A.D. 214 Pond modifications, it is recommended that the invert of the outfall for the S.A.D. 214 Pond be designed as low as possible in order to provide the opportunity for future expansion of the pond capacity.*

III. COORS CONNECTION STORM DRAIN WATERSHED

A. Background Information

As illustrated on the photo based background of Plate 1, the existing condition watershed is largely undeveloped. Paved streets within the onsite watershed include the following:

- Bluewater Road from Unser Boulevard to Airport Drive.
- Airport Road from Los Volcanes to Bluewater Road.
- Airport Drive from Bluewater to the south line of the Business Park.
- No drainage facilities are constructed within the onsite watershed.

1. Existing Constraints

~~- No drainage outfall or collector system currently exists.~~

- *At the time of the first draft of this report, no drainage outfall or collector system existed. The Airport Drive Storm Drain was constructed in early 1993 to provide an outfall.*

- FEMA Flood plain covers much of the onsite watershed. This Flood plain is caused by sheet flow from the large offsite watershed west of Unser. The existing Unser Boulevard and the Unser Boulevard Storm drain were designed to handle flows from the on-site area west of Unser. Therefore, the additional flow from the offsite area west of Unser Boulevard is in excess of the design capacity of existing Unser Boulevard improvements.

- Lots in the lower portion of the watershed receive sheet flow from lots in the upper portion of the watershed.

2. Previous Studies

Several previous studies have included all of or portions of this watershed. Some of the most recent and pertinent studies are listed and discussed below.

a. West Bluff Drainage Plan Phase III by Andrews, Asbury and Roberts, Inc. dated January 1987.

- Proposed the onsite watershed outfall to the West Bluff Outfall via the Future I–40 Interceptor, and the Future West Mesa Diversion.

- Due to the fact that completion of the projects listed above will be very costly and not expected to occur in the near future, another outfall for the onsite area is proposed in the plan presented here.

b. Drainage Management Study for the North/South Coors Connection by Denny–Gross and Associates dated June 1983.

- Hydrologic and hydraulic analysis pertaining to the existing Coors Connection Storm Drain established the peak discharge rate from the entire Coors Connection Storm Drain at 138 cfs.

  As–built drawings of the Coors Connection Storm Drain show a larger storm drain than the one analyzed in the study. A hydrologic analysis coinciding with the higher peak flow rates associated with the upsized storm drain could not be located. The analysis done for the Drainage Plan presented here includes the Coors Connection Storm Drain per the as–built drawings for the Project. The Watershed assumed for the Coors Connection Storm Drain includes the area which contributes flow to the storm drain in the existing condition. The allowable discharge rates, determined by this analysis, for the area currently discharging to the Coors Connection Storm Drain are in excess of 138 cfs.

c. Letter/Report RE: North/South Coors Connection/Airport Drive Storm Drain Capacity by Easterling & Associates, Inc., dated April 7, 1992.

- Presented preliminary modeling of the watersheds of the subject storm drains and preliminary hydraulic analysis of the subject storm drains.

d. Design Analysis Report for Airport Drive Storm Drain Outfall by Easterling & Associates, Inc., dated October 1992.

e. Design Analysis Report for Airport Drive/Bluewater Storm Drain by Easterling & Associates, Inc., dated February 1993.

B. Drainage Schemes

Plates 1 and 2 illustrate the drainage schemes and associated peak flow rates for the interim and the fully developed conditions in the watershed.

1. The interim condition illustrated on Plate 1 shows the facilities required to remove the FEMA flood plain from the onsite watershed and address local drainage problems. These facilities include:

Facilities required for FEMA Flood Plain removal

- The Unser Diversion, a series of collection facilities and detention/retention/sedimentation pond to be located along the western boundary of the Atrisco Business Park. These facilities will collect and treat runoff from the offsite watershed located north and west of the Atrisco Business Park.

Facilities required to address local drainage problems

- Airport Drive Storm Drain Outfall, approximately 780 LF of 48" diameter storm drain to be located in the median of Coors Boulevard downstream of Airport Drive. This storm drain will parallel existing 24" and 30" diameter segments of the existing Coors Connection Storm Drain and will connect to an existing 54" segment of the same. ~~(PLANNED)~~ *(CONSTRUCTED 1993)*

- Airport Drive Storm Drain, a 48" diameter storm drain to be located in Airport Drive extending from the Coors Connection Storm Drain to the south line of the Atrisco Business Park. ~~(Currently under construction.)~~ *(CONSTRUCTED 1993)*

- Airport Drive/Bluewater Road Storm Drain, a 48" diameter storm drain extending from the Airport Drive Storm Drain to the intersection of Airport Road and Bluewater Road. (PLANNED *FOR LATE 1993 CONSTRUCTION*)

- Conservation treatment as illustrated on Plate 1, Plate 5 and Plate 6 applied to the *indicated* portions of onsite undeveloped tracts to retain runoff and thus sediment onsite. The *This* conservation treatment or other retention or detention facilities must *should* be in place prior to the extension of the Airport Drive Storm Drain into the Business Park. This is due to the fact that the existing condition flow rate is greater than the developed condition flow rates proposed for the onsite area by this Plan.

  In addition to providing protection for the Airport Drive storm drain, the conservation treatment can be modified in the future to protect individual developing lots from the sheet flow generated on undeveloped lots located upstream.

  A drainage covenant to facilitate the maintenance of the interim drainage facilities will be required to be in place prior to the issuance of building permits within the onsite area of the Coors Connection Storm Drain Watershed.

2. The fully developed condition illustrated in Plate 2 requires the public storm drain facilities as listed for the interim condition and the additional public facilities listed below.

   - Airport Road Storm Drain, a 30" to 36" diameter storm drain extending north along Airport Road from the Airport/Bluewater Storm Drain to the intersection of Airport Road and Los Volcanes Road.

   - Bluewater Road Storm Drain, a 24" diameter storm drain extending west along Bluewater Road from the Airport Drive/Bluewater Road Storm Drain to the eastern boundary of Tract L–1. The purpose of this storm drain is to provide an outfall for the proposed private detention ponds along Bluewater Road.

   - Tract "M" Storm Drain, a 24" diameter storm drain extending down the back lot line of the lots in Tract "M." The purpose of this storm drain is to provide an outfall from the proposed private detention ponds located in the northern portion of Tract "M."

   - Los Volcanes Storm Drain, a 24" diameter storm drain extending west from the Airport Road Storm Drain to the east lot line of Lot 6, Tract S–1. The purpose of this storm drain is to provide

an outfall for the proposed private detention ponds to be located along Los Volcanes Road.

C. Developed Condition Drainage Constraints

1. Onsite Watershed

The maximum allowable peak 100 year discharge rates from lots in the onsite watershed are limited to the following:

- 0.1 cfs per acre except as provided below.
- Small areas of those lots located on the uphill side of a street may discharge uncontrolled to the street where required to facilitate grading. This provision is subject to the following criteria.
  - The total area allowed free discharge from the lot shall not be larger than an area equivalent to a strip 10 feet wide along the total street frontage of the lot.
  - Impervious areas allowed free discharge to the street shall not be larger than an equivalent area two feet wide along the total street frontage of the lot.
  - The free discharge from the small areas defined above shall not be considered a part of the 0.1 cfs allowable discharge from the lot.

Pond areas outside of the parking areas shall be fully landscaped. A minimum of 85% of the surface area of the pond area shall consist of pervious ground treatments. Bark or other landscape materials which are prone to float under submerged conditions shall not be allowed as a surface treatment material within the limits of pond areas.

Low flow channels shall connect all inlets to the outlet in the detention pond(s). Low flow channels shall be constructed with durable, erosion resistant materials which facilitate long term maintenance of the pond area.

A covenant insuring the perpetuity and the maintenance of the required detention facilities on individual lots will be required to replace the interim condition drainage covenant at the time of development of individual lots.

2. Offsite Watershed

- Peak 100 year discharge from lots discharging into the Airport Drive Storm Drain is limited to 0.1 cfs per acre. This includes Basins 200.6, 210.4, 211.1, 220.2, 220.4 and 220.5 as shown on Plate 2.

- Peak 100 year discharge rates from all other lots contributing flow to the Coors Connection Storm Drain should be limited to rates which will not cause the aggregate flow rate at the point of connection to the Coors Connection Storm Drain to exceed the aggregate existing condition flow rates established by this Plan.

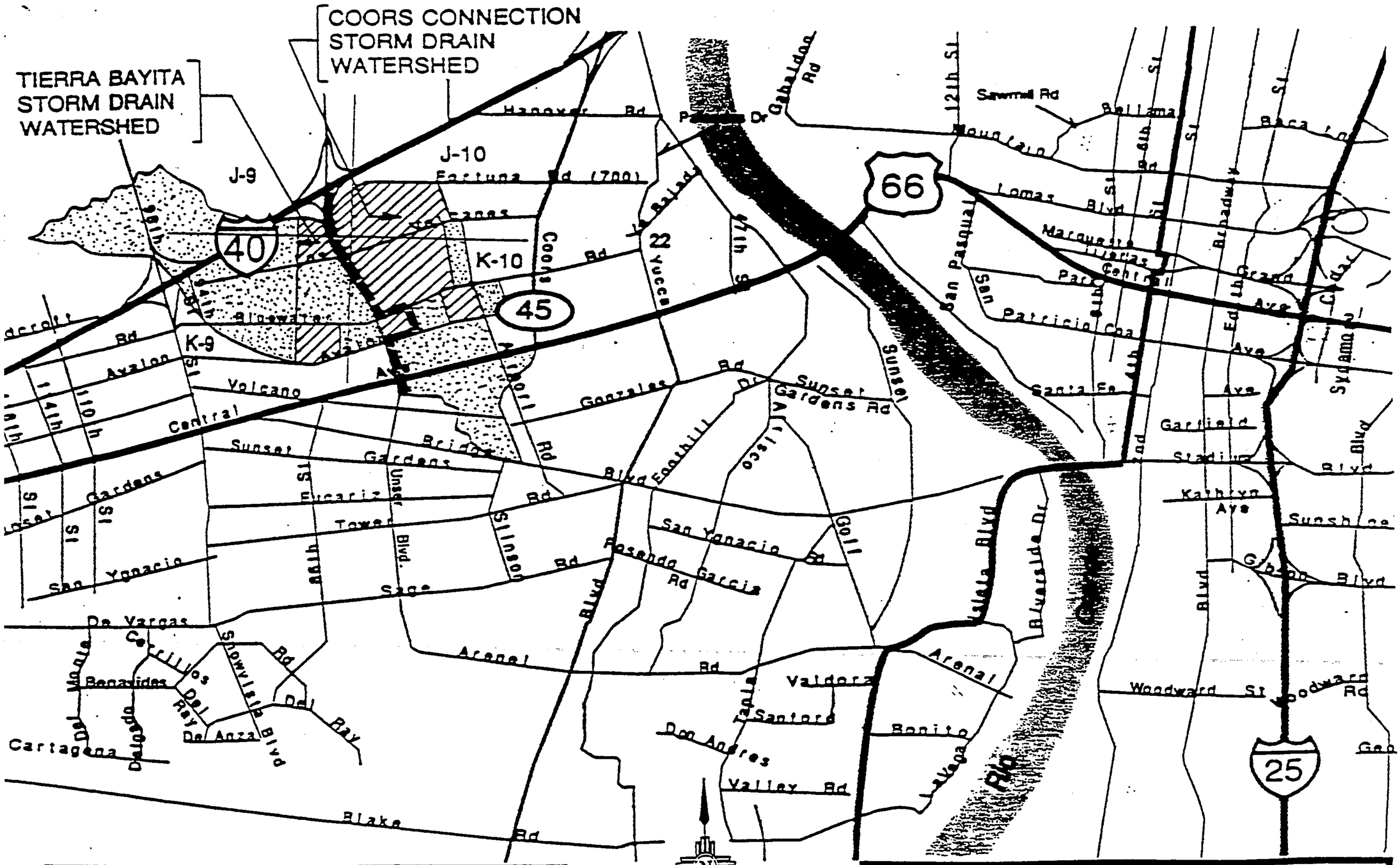

LEGEND

ON SITE WATERSHED

OFF SITE WATERSHED

ATRISCO BUSINESS PARK MASTER DRAINAGE PLAN LOCATION MAP

FIGURE 1

FIGURES

Figure 1 – Location Map
~~Figure 2 – Connection Schematic~~
Figure 3 – F.E.M.A. Flood Plain Map

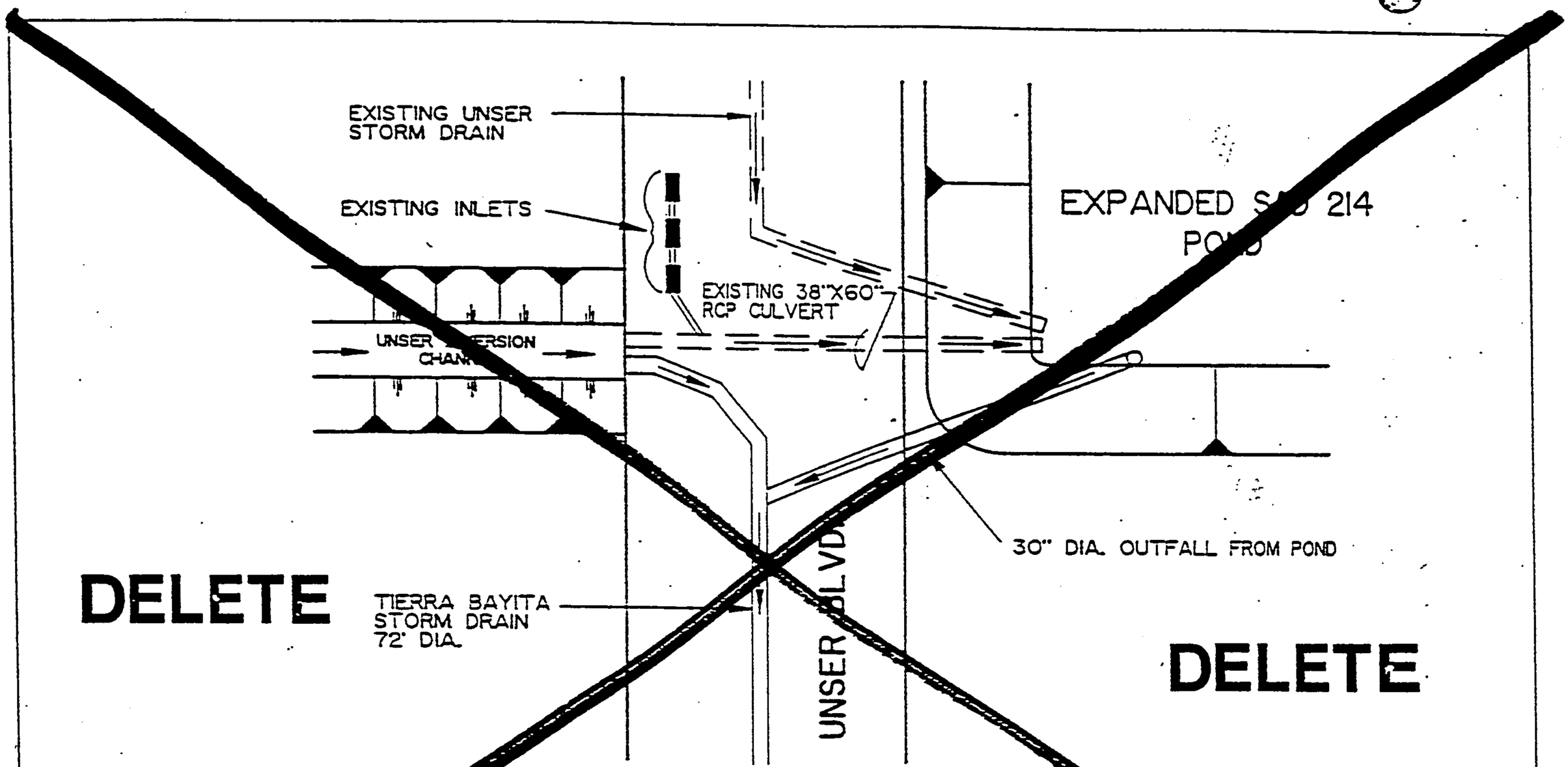

CONNECTION TO TIERRA BAYITA STORM DRAIN

NOTE: INVERT OF TIERRA BAYITA STORM DRAIN CONNECTION TO THE CHANNEL IS LOWER THAN THE EXISTING CULVERT INVERT. LOW FLOWS ARE DIVERTED DIRECTLY TO THE TIERRA BAYITA STORM DRAIN. FLOWS IN EXCESS OF THE TIERRA BAYITA STORM DRAIN CAPACITY ARE ROUTED THROUGH THE EXISTING 38" X 60" CULVERT TO BE DETAINED IN THE EXPANDED SAD 214 POND.

EASTERLING & ASSOCIATES, INC.

ATRISCO BUSINESS PARK
MASTER DRAINAGE PLAN
SCHEMATIC

FIGURE NO. 2 DATE: MARCH 199

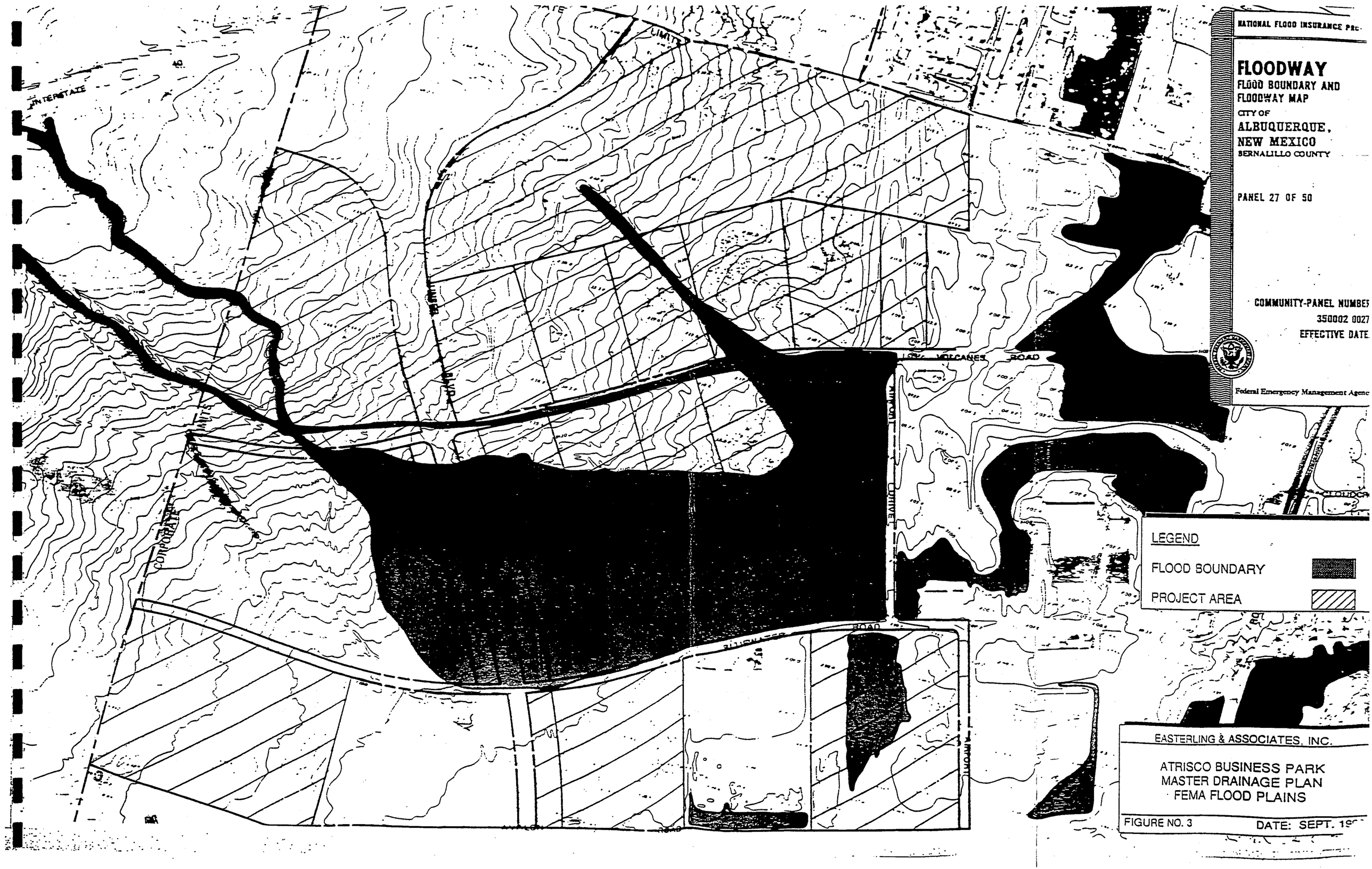
NATIONAL FLOOD INSURANCE PRO
FLOODWAY
FLOOD BOUNDARY AND
FLOODWAY MAP
CITY OF
ALBUQUERQUE,
NEW MEXICO
BERNALILLO COUNTY
PANEL 27 OF 50
COMMUNITY-PANEL NUMBER
350002 0027
EFFECTIVE DATE
Federal Emergency Management Agenc
INTERSTATE
LIMITS
JUNIPER BLVD.
VOLCANES ROAD
ATRISCO DRIVE
CORPORATE
LEGEND
FLOOD BOUNDARY
PROJECT AREA
EASTERLING & ASSOCIATES, INC.
ATRISCO BUSINESS PARK
MASTER DRAINAGE PLAN
FEMA FLOOD PLAINS
FIGURE NO. 3
DATE: SEPT. 19

DRAINAGE REPORT
for
ALBERTSON'S SHOPPING CENTER

Prepared For

CALLAWAY ARCHITECTS, INC.
Mr. Jeff Carroll
17738 Preston Road, Suite 125
Dallas, TX 75252

MAY 2 5 1995

January 1995

JOHN M. MacKENZIE
NEW MEXICO
11012
LICENSED PROFESSIONAL ENGINEER

5/24/95 (revised)

D. MARK GOODWIN & ASSOCIATES

PURPOSE

The pupose of this report is to present the grading and drainage plan for the Albertson's Shopping Center site in order to obtain site development plan and building permit approval. All applicable ordinances, the DPM, and AHYMO were utilized to prepare this plan.

EXISTING CONDITIONS

The project comprises an area of 7.4240 acres within lots 61, 62 & 63 at the southwest corner of Central and the New Coors By-Pass (Appendix A). This site is bounded by Central Avenue to the north, Coors Boulevard to the east and south and by vacant property to the west.

The tract is relatively level and slopes from north to south at approximately 0.33 percent. Vegetative cover is typical of west side property, and the soils are sandy. The site drains overland and sheet flows onto Coors Boulevard where the runoff is collected by a series of storm inlets. Based upon existing surficial conditions, AHYMO anticipates this site to produce 13.74 cfs during the 100 year-6 hour storm.

HYDROLOGIC ANALYSIS

AHYMO was utilized for this analysis with the intent to discharge developed flow at a rate that is presently generated by this site. The Coors Boulevard storm drain system was intended to eventually accept all flows from a 285.5 acre basin when it was designed inthe early to mid 1980's. This was verified utilizing the Boyle Engineering Corporation analysis of the Amole Del Norte storm diversion facility and the Easterling and Associates, Inc. analysis of the Airport Drive storm drain outfall (the Coors Upgrade). The Airport Drive study contains as-built plan and profile sheets of the Coors storm drain by NMSH&TD, which were also utilized in this analysis (sheets 1893). All of the pertinent hydrologic parameters and calculation methods are presented in Appendix B of this report.

PROPOSED MANAGEMENT PLAN

As a developed site, this amended plan still proposes to discharge from two on-site locations and will add a basin fronting Coors Boulevard with a combined maximum flow rate of 13.04 cfs into existing storm inlets on Coors Boulevard. The existing flow generated by this site is 13.74 cfs, which is greater than the throttled discharge rate.

The amended improvements preserve the concept of two basins with ponds retaining the difference in volumes between existing and proposed (See Appendix B). The ponds will be located in parking areas (See Sheet 1) and the ponds will have controlled discharge into the back of the existing storm inlets in Coors Boulevard. Basin A is controlled by a 6" Orifice Plate on the pipe invert with a discharge of 2.60 cfs. Basin B is controlled by an 11" Orifice Plate on the pipe invert with a discharge of 9.04 cfs. The maximum water surface elevation for the ponds are 90.15 for Basin A and 86.86 for Basin B. The basin fronting Coors will surface drain into the same storm inlets with a discharge of 1.83 cfs. These three rates were tabulated and given as the discharge rate for the entire site.

The off-site flows from Central Avenue will be directed from the western property line east to Coors Boulevard (See Appendix B). This basin's developed flow is 3.98 cfs and will remain in the right-of-way of Central and Coors.

INTERIM EROSION CONTROL

Due to the sensitive nature of the sandy soils associated with this site, an Erosion Control Plan will be identified and detailed on a subsequent plan that will also address comments received after this submittal.

CONCLUSIONS

The implementation of the drainage management plan for this site can be accomplished by utilizing existing drainage facilities in Coors Boulevard. It has been adequately shown in this report and others cited, that capacities of these systems are adequate and, indeed, were masterplanned with this site in mind. It has also been shown in this report that the internal conveyance of storm water can be designed to meet all current City requirements.

DESIGN ANALYSIS REPORT

for the

AIRPORT DRIVE STORM DRAIN OUTFALL

(THE COORS UPGRADE)

OCTOBER 1992

PREPARED FOR:

SUNWEST BANK
SPECIAL ASSETS DEPARTMENT
303 Roma Avenue, N.W.
Albuquerque, New Mexico 87102

PREPARED BY:

Easterling & Associates, Inc.
10131 Coors Road, N.W.
Suite H-7
Albuquerque, NM 87114-4048

I, Charles M. Easterling, do hereby certify that this report was prepared by me or under my direction and that I am a duly registered Professional Engineer under the laws of the State of New Mexico.

Charles M. Easterling, P.E.
NMPE No. 6411

10-26-92
Date

Design Analysis Report

for the

Airport Drive Storm Drain Outfall

(The Coors Upgrade)

October 1992

Purpose

To demonstrate the adequacy of the proposed storm drain improvements.

Project Description

The project consists of approximately 780 LF of 48″ diameter reinforced concrete pipe storm drain. The proposed storm drain will connect the future Airport Drive Storm Drain (C.O.A. Project 4383.90) in Airport Drive to an existing 54″ diameter storm drain in Coors Boulevard as proposed in the Master Drainage Plan for Atrisco Business Park, September 1992. At the point of connection to the existing Coors Boulevard Storm Drain, an existing junction manhole will be removed and replaced with a series of bends and wyes to increase the hydraulic efficiency of the junctions located there. The proposed 48″ diameter storm drain will parallel an existing 24″ to 30″ diameter storm drain located in the median of Coors Boulevard. The parallel configuration was chosen over removal and replacement of the existing storm drain line in anticipation of the need for additional capacity to provide an outfall from property located north and west of the proposed storm drain.

Hydrology

The peak flow rates for the proposed storm drain were determined in the Master Drainage Plan for the Atrisco Business Park dated September 1992. The assumption made in modeling the storm drain for the Master Drainage Plan was that the 48″ storm drain would replace the existing 24″ to 30″ storm drain in Coors rather than parallel it. The model also assumed that some of the water from Coors Boulevard would not be accepted into the storm drain at the inlets adjacent to the junction with the new 48″ storm drain because of a high H.G.L. in the storm drain during peak flows. Due to physical improvements which will be made to the junction in the proposed project and refinements made to the hydraulic analysis of the downstream storm drain, the current analysis indicates the storm drain will have capacity to accept all of the flows from Coors Boulevard. The peak flow rates in the storm drain were manually adjusted to reflect these changes.

Hydraulics

Hydraulic grade line calculations were performed for the proposed storm drain, as well as for the downstream segment of the existing Coors Boulevard Storm Drain. Calculations were made in a spreadsheet utilizing equations proposed by the C.O.A. D.P.M. Chapter 22.3. A summary of these calculations is included in Appendix "A." Profiles of the storm drains included in the analysis are also located in Appendix "A."

The starting water surface elevation, at the point of discharge to the AMOLE system, for the existing Coors Boulevard Storm Drain was assumed to be 5029.00 as was used in the H.G.L. calculations for the storm drain performed by D.T.M and Associates, the designers of the Coors Boulevard Storm Drain, in 1986. No analysis was made of existing inlet capacity but rather all flows from upstream street segments were assumed to be taken into the storm drain at all inlet locations. At junction points, the flow contributed by the lateral at the time of peak flow in the trunk line was determined by subtracting the immediate upstream peak rate from the immediate downstream peak rate. Where the H.G.L. was calculated to be lower than the soffit elevation of the pipe, the H.G.L. was assumed to be at the soffit elevation.

Pipe Class and Bedding Class

An analysis was performed to demonstrate the adequacy of the pipe and bedding classes specified for the project. A copy of this analysis is included in Appendix "B." The analysis was performed per the method presented in the "Concrete Pipe Design Manual" published by the American concrete Pipe Association, June 1980 edition.

The analysis indicated Class III R.C.P. pipe bedded in Class "C" bedding is adequate for trench depths less than 14′. Class III R.C.P. should be bedded with Class "B" bedding for trench depths in the 14′ to 15′ range.

Conclusions

The calculations performed for this analysis demonstrate that the proposed storm drain will have adequate capacity to convey the peak 100 year flow rates established in the Master Drainage Plan for the Atrisco Business Park.

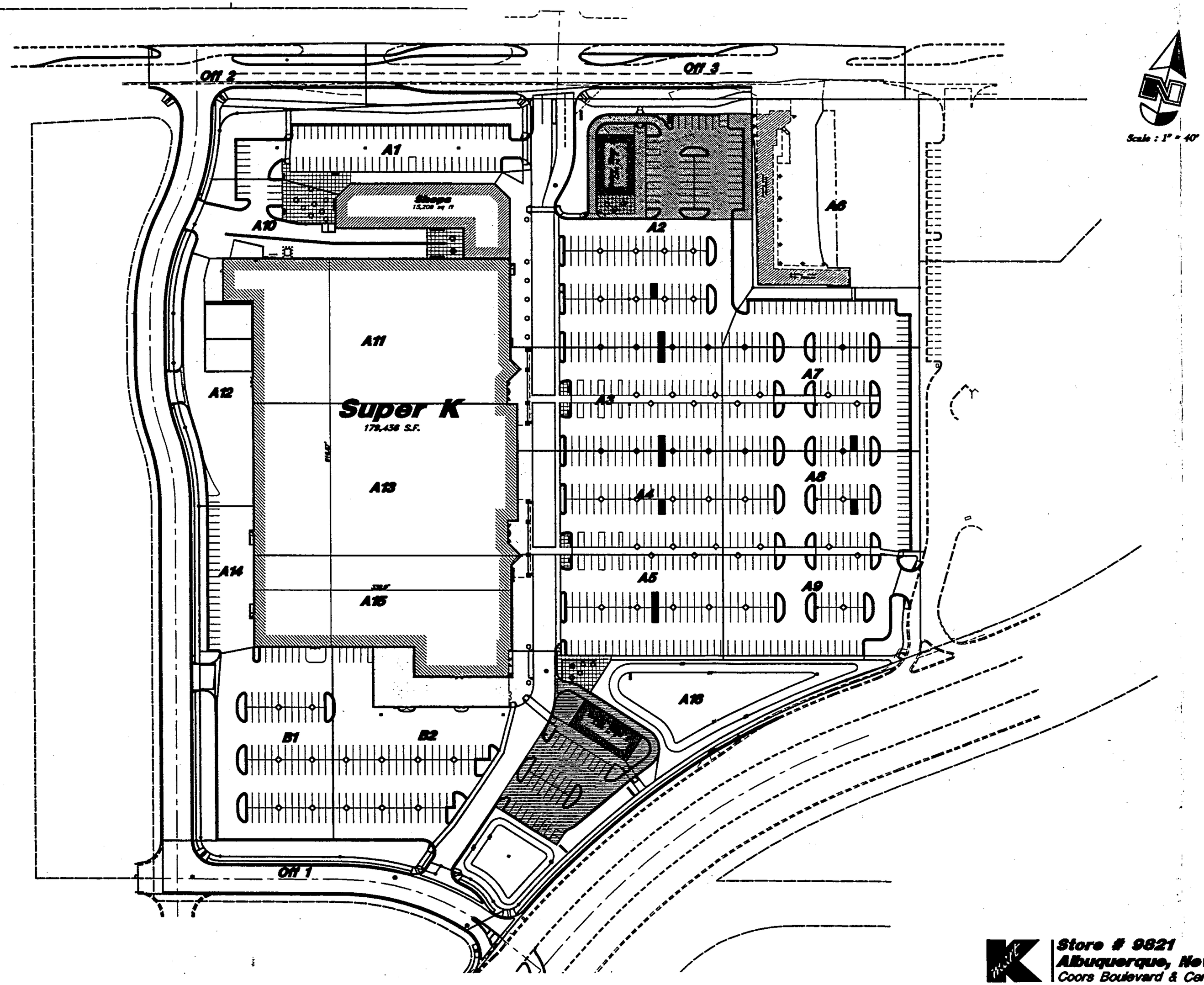

Store # 9821
Albuquerque, New Mexico
Coors Boulevard & Central Avenue

REV	DATE	DESCRIPTION

GREAT BASIN ENGINEERING - SOUTH
CONSULTING ENGINEERS and LAND SURVEYORS
2010 North Redwood Road, P.O. Box 16747
Salt Lake City, Utah 84116
Salt Lake City (801)531-8529 Ogden (801)394-7288 Fax (801)531-8551

Figure 2

Coors Plaza

Coors Boulevard and Central Avenue
Albuquerque, New Mexico

3 Jul, 2001

SHEET NO.

Area	Peak Flow (cfs)
A1	6
A2	11
A3	5
A4	5
A5	5
A6	8
A7	4
A8	4
A9	3
A10	3
A11	9
A12	2
A13	9
A14	2
A15	6
A16	3

Table 3. – Peak Flows Basin A

The hydrograph for Pond A is included in Appendix A. Peak inflow into the pond is 74 cfs, peak outflow is 16 cfs with 52,272 cubic feet of detention and a max stage of 87.2. Emergency overflow for the pond is at 87.4. The released storm water will be piped through a 15" pipe directly west out of the pond to the 48" storm drain that currently exists in Airport Drive, per the Master Drainage Plan for the Atrisco Business Park and the Airport Drive Storm Drain Outfall Design Analysis Report by Easterling & Associates.

Basin B will collect water via catch basins at the south end of the site and catch basins which will be installed when the drive through is built. Table 4 shows the peak flows for each sub-area within Basin B.

Area	Peak Flow (cfs)
B1	5
B2	11

Table 4. – Peak Flows Basin B

The hydrograph for Detention Pond B is included in Appendix A. Peak inflow for Pond B is 15 cfs; peak outflow is 8 cfs with 4,356 cubic feet of detention provided and a max stage of 81.5. Emergency overflow for Pond B is 82.5.

Storm water from Bjarne Street (OFF1), Amanda Street (OFF2), and Central Blvd. (OFF3), has also been analyzed. Table 5 shows the peak flows from each area and the peak flow per inlet.

Area	Peak Flow (cfs)	Peak Inlet Flow (cfs)
OFF1	3	1.5 – (2 inlets)
OFF2	6	3 – (2 inlets)
OFF3	4	4 – (Future Inlet)

Table 5. – Offsite Peak Flows

A hydraulic analysis has been completed for the three separate runs of storm drain that contribute to Pond A. The portion that carries the roof runoff has been sized to carry the 100-year storm since there is no ponding provided within the parking lot area to attenuate the peak flows. The storm drain that is closest to the front door has been sized to minimize ponding in the parking lot while the storm drain which is furthest from the front door has been sized to allow ponding in the parking lot. The depth of ponding in the parking areas has been noted on the grading plan. The hydraulic analysis and hydraulic grade line sheets have been included in Appendix A.

VI. Conclusions

The grading and drainage plan for this project has been analyzed in detail to meet or exceed the criteria as set forth in the DPM and the Master Drainage Plan for the Atrisco Business Park, discharging less than the allowable flows into the 48" storm drain in Airport Drive.

VII. References

1. Federal Emergency Management Agency (FEMA), Flood Insurance Rate Map, Bernalillo County, New Mexico and Incorporated Areas, Map No. 35001C0329 D, Effective Date: September 20, 1996.

2. D.P.M. Drainage Design Criteria Committee, *Section 22.2, Hydrology, January 1993.*

3. Easterling & Associates, Inc., *Master Drainage Plan for the Atrisco Business Park, September 1992, Revised March 1993, October 1993.*

4. Mark Goodwin & Associates, *Drainage Report for Albertson's Shopping Center, January 1995.*

5. Easterling & Associates, Inc., *Design Analysis Report for the Airport Drive Storm Drain Outfall (The Coors Upgrade), October 1992.*

6. U.S. Department of Commerce, National Oceanic and Atmospheric Administration, National Weather Service, *NOAA Atlas 2, Precipitation-Frequency Atlas of the Western United States, Volume IV – New Mexico, 1973.*

RUNOFF SUMMARY
FLOW IN CUBIC FEET PER SECOND
TIME IN HOURS, AREA IN SQUARE MILES

OPERATION	STATION	PEAK FLOW	TIME OF PEAK	AVERAGE FLOW FOR MAXIMUM PERIOD 6-HOUR	24-HOUR	72-HOUR	BASIN AREA	MAXIMUM STAGE	TIME OF MAX STAGE
HYDROGRAPH AT	A1	6.	3.00	0.	0.	0.	0.00		
ROUTED TO	PND A1	6.	3.00	0.	0.	0.	0.00	89.07	3.00
ROUTED TO	15"	6.	3.00	0.	0.	0.	0.00		
HYDROGRAPH AT	A2	11.	3.00	1.	1.	1.	0.00		
2 COMBINED AT	NODE35	17.	3.00	1.	1.	1.	0.01		
ROUTED TO	PND A2	16.	3.00	1.	1.	1.	0.01	87.06	3.00
ROUTED TO	18"	16.	3.00	1.	1.	1.	0.01		
HYDROGRAPH AT	A3	5.	3.00	0.	0.	0.	0.00		
2 COMBINED AT	NODE36	21.	3.00	1.	1.	1.	0.01		
ROUTED TO	PND A3	21.	3.00	1.	1.	1.	0.01	87.00	3.00
ROUTED TO	18"	20.	3.00	1.	1.	1.	0.01		
HYDROGRAPH AT	A4	5.	3.00	0.	0.	0.	0.00		
2 COMBINED AT	NODE37	25.	3.00	2.	2.	2.	0.01		
ROUTED TO	PND A4	25.	3.00	2.	2.	2.	0.01	86.15	3.00
ROUTED TO	18"	24.	3.00	2.	2.	2.	0.01		
HYDROGRAPH AT	A5	5.	3.00	0.	0.	0.	0.00		
2 COMBINED AT	NODE38	29.	3.00	2.	2.	2.	0.01		
ROUTED TO	PND A5	29.	3.00	2.	2.	2.	0.01	85.97	3.00
ROUTED TO	NODE34	29.	3.00	2.	2.	2.	0.01		
HYDROGRAPH AT	A10	3.	3.00	0.	0.	0.	0.00		
ROUTED TO	12"	3.	3.00	0.	0.	0.	0.00		
ROUTED TO	15"	3.	3.00	0.	0.	0.	0.00		

HYDROGRAPH AT	A11	9.	3.00	1.	1.	1.	0.00	
2 COMBINED AT	NODE48	12.	3.00	1.	1.	1.	0.00	
ROUTED TO	18"	11.	3.00	1.	1.	1.	0.00	
HYDROGRAPH AT	A12	2.	3.00	0.	0.	0.	0.00	
HYDROGRAPH AT	A13	9.	3.00	1.	1.	1.	0.00	
3 COMBINED AT	NODE51	21.	3.00	1.	1.	1.	0.01	
ROUTED TO	24"	20.	3.00	1.	1.	1.	0.01	
HYDROGRAPH AT	A14	1.	3.00	0.	0.	0.	0.00	
HYDROGRAPH AT	A15	6.	3.00	0.	0.	0.	0.00	
3 COMBINED AT	NODE53	27.	3.00	2.	2.	2.	0.01	
ROUTED TO	24"	26.	3.00	2.	2.	2.	0.01	
ROUTED TO	24"	25.	3.00	2.	2.	2.	0.01	
ROUTED TO	24"	24.	3.00	2.	2.	2.	0.01	
HYDROGRAPH AT	A6	8.	3.00	0.	0.	0.	0.00	
ROUTED TO	15"	8.	3.00	0.	0.	0.	0.00	
HYDROGRAPH AT	A7	4.	3.00	0.	0.	0.	0.00	
2 COMBINED AT	NODE40	11.	3.00	1.	1.	1.	0.00	
ROUTED TO	18"	11.	3.00	1.	1.	1.	0.00	
HYDROGRAPH AT	A8	4.	3.00	0.	0.	0.	0.00	
2 COMBINED AT	NODE42	15.	3.00	1.	1.	1.	0.00	
ROUTED TO	18"	14.	3.00	1.	1.	1.	0.00	
HYDROGRAPH AT	A9	3.	3.00	0.	0.	0.	0.00	
2 COMBINED AT	NODE44	17.	3.00	1.	1.	1.	0.01	
ROUTED TO	21"	17.	3.00	1.	1.	1.	0.01	
HYDROGRAPH AT	A16	3.	3.00	0.	0.	0.	0.00	
4 COMBINED AT	NODE46	73.	3.00	5.	5.	5.	0.03	
ROUTED TO	POND A	16.	3.33	5.	5.	5.	0.03	87.15 3.33

HYDROGRAPH AT	B1	4.	3.00	0.	0.	0.	0.00
ROUTED TO	15"	4.	3.00	0.	0.	0.	0.00
HYDROGRAPH AT	B2	11.	3.00	1.	1.	1.	0.00
2 COMBINED AT	NODE60	14.	3.00	1.	1.	1.	0.00
ROUTED TO	POND B	7.	3.17	1.	1.	1.	0.00
						81.39	3.17
HYDROGRAPH AT	OFF2	6.	3.08	1.	1.	1.	0.00
ROUTED TO	24"	6.	3.08	1.	1.	1.	0.00
HYDROGRAPH AT	OFF1	3.	3.08	0.	0.	0.	0.00
2 COMBINED AT	NODE62	9.	3.08	1.	1.	1.	0.00
HYDROGRAPH AT	OFF3	4.	3.08	0.	0.	0.	0.00
4 COMBINED AT	NODE9	35.	3.08	7.	7.	7.	0.04

HYDROGRAPH AT STATION POND B

DA	MON	HRMN	ORD	OUTFLOW	STORAGE	STAGE	DA	MON	HRMN	ORD	OUTFLOW	STORAGE	STAGE	DA	MON	HRMN	ORD	OUTFLOW	STORAGE	STAGE
22	JUN	0000	1	0.	0.0	77.8	22	JUN	0200	25	0.	0.0	77.8	22	JUN	0400	49	0.	0.0	77.8
22	JUN	0005	2	0.	0.0	77.8	22	JUN	0205	26	0.	0.0	77.8	22	JUN	0405	50	0.	0.0	78.0
22	JUN	0010	3	0.	0.0	77.8	22	JUN	0210	27	0.	0.0	77.8	22	JUN	0410	51	0.	0.0	77.8
22	JUN	0015	4	0.	0.0	77.8	22	JUN	0215	28	0.	0.0	77.8	22	JUN	0415	52	0.	0.0	78.0
22	JUN	0020	5	0.	0.0	77.8	22	JUN	0220	29	0.	0.0	77.8	22	JUN	0420	53	0.	0.0	77.8
22	JUN	0025	6	0.	0.0	77.8	22	JUN	0225	30	0.	0.0	77.8	22	JUN	0425	54	0.	0.0	77.9
22	JUN	0030	7	0.	0.0	77.8	22	JUN	0230	31	0.	0.0	78.0	22	JUN	0430	55	0.	0.0	77.8
22	JUN	0035	8	0.	0.0	77.8	22	JUN	0235	32	1.	0.0	78.1	22	JUN	0435	56	0.	0.0	77.9
22	JUN	0040	9	0.	0.0	77.8	22	JUN	0240	33	1.	0.0	78.3	22	JUN	0440	57	0.	0.0	77.8
22	JUN	0045	10	0.	0.0	77.8	22	JUN	0245	34	2.	0.0	78.7	22	JUN	0445	58	0.	0.0	77.9
22	JUN	0050	11	0.	0.0	77.8	22	JUN	0250	35	3.	0.0	79.2	22	JUN	0450	59	0.	0.0	77.8
22	JUN	0055	12	0.	0.0	77.8	22	JUN	0255	36	6.	0.0	80.5	22	JUN	0455	60	0.	0.0	77.9
22	JUN	0100	13	0.	0.0	77.8	22	JUN	0300	37	7.	0.0	81.0	22	JUN	0500	61	0.	0.0	77.8
22	JUN	0105	14	0.	0.0	77.8	22	JUN	0305	38	7.	0.1	81.3	22	JUN	0505	62	0.	0.0	77.9
22	JUN	0110	15	0.	0.0	77.8	22	JUN	0310	39	7.	0.1	81.4	22	JUN	0510	63	0.	0.0	77.8
22	JUN	0115	16	0.	0.0	77.8	22	JUN	0315	40	7.	0.1	81.2	22	JUN	0515	64	0.	0.0	77.9
22	JUN	0120	17	0.	0.0	77.8	22	JUN	0320	41	7.	0.0	81.0	22	JUN	0520	65	0.	0.0	77.8
22	JUN	0125	18	0.	0.0	77.8	22	JUN	0325	42	6.	0.0	80.5	22	JUN	0525	66	0.	0.0	77.9
22	JUN	0130	19	0.	0.0	77.8	22	JUN	0330	43	0.	0.0	77.8	22	JUN	0530	67	0.	0.0	77.8
22	JUN	0135	20	0.	0.0	77.8	22	JUN	0335	44	2.	0.0	78.5	22	JUN	0535	68	0.	0.0	77.9
22	JUN	0140	21	0.	0.0	77.8	22	JUN	0340	45	0.	0.0	77.8	22	JUN	0540	69	0.	0.0	77.8
22	JUN	0145	22	0.	0.0	77.8	22	JUN	0345	46	1.	0.0	78.1	22	JUN	0545	70	0.	0.0	77.9
22	JUN	0150	23	0.	0.0	77.8	22	JUN	0350	47	0.	0.0	77.8	22	JUN	0550	71	0.	0.0	77.8
22	JUN	0155	24	0.	0.0	77.8	22	JUN	0355	48	1.	0.0	78.0	22	JUN	0555	72	0.	0.0	77.9

HYDROGRAPH AT STATION POND A

DA	MON	HRMN	ORD	OUTFLOW	STORAGE	STAGE	DA	MON	HRMN	ORD	OUTFLOW	STORAGE	STAGE	DA	MON	HRMN	ORD	OUTFLOW	STORAGE	STAGE
22	JUN	0000	1	0.	0.0	80.2	22	JUN	0200	25	1.	0.0	80.3	22	JUN	0400	49	14.	0.6	85.7
22	JUN	0005	2	0.	0.0	80.2	22	JUN	0205	26	1.	0.0	80.3	22	JUN	0405	50	14.	0.6	85.5
22	JUN	0010	3	0.	0.0	80.2	22	JUN	0210	27	1.	0.0	80.4	22	JUN	0410	51	14.	0.5	85.2
22	JUN	0015	4	0.	0.0	80.2	22	JUN	0215	28	1.	0.0	80.4	22	JUN	0415	52	13.	0.4	85.0
22	JUN	0020	5	0.	0.0	80.2	22	JUN	0220	29	1.	0.0	80.4	22	JUN	0420	53	13.	0.3	84.7
22	JUN	0025	6	0.	0.0	80.2	22	JUN	0225	30	1.	0.0	80.5	22	JUN	0425	54	13.	0.2	84.4
22	JUN	0030	7	0.	0.0	80.2	22	JUN	0230	31	4.	0.0	81.2	22	JUN	0430	55	12.	0.1	84.2
22	JUN	0035	8	0.	0.0	80.2	22	JUN	0235	32	6.	0.0	82.1	22	JUN	0435	56	12.	0.1	83.8
22	JUN	0040	9	0.	0.0	80.2	22	JUN	0240	33	9.	0.0	82.8	22	JUN	0440	57	8.	0.0	82.6
22	JUN	0045	10	0.	0.0	80.2	22	JUN	0245	34	11.	0.0	83.5	22	JUN	0445	58	0.	0.0	80.2
22	JUN	0050	11	0.	0.0	80.2	22	JUN	0250	35	12.	0.0	83.7	22	JUN	0450	59	2.	0.0	80.7
22	JUN	0055	12	0.	0.0	80.2	22	JUN	0255	36	12.	0.2	84.3	22	JUN	0455	60	0.	0.0	80.2
22	JUN	0100	13	0.	0.0	80.2	22	JUN	0300	37	14.	0.5	85.2	22	JUN	0500	61	2.	0.0	80.7
22	JUN	0105	14	0.	0.0	80.2	22	JUN	0305	38	15.	0.8	86.2	22	JUN	0505	62	0.	0.0	80.2
22	JUN	0110	15	0.	0.0	80.3	22	JUN	0310	39	16.	1.1	86.8	22	JUN	0510	63	2.	0.0	80.6
22	JUN	0115	16	0.	0.0	80.3	22	JUN	0315	40	16.	1.2	87.1	22	JUN	0515	64	0.	0.0	80.2
22	JUN	0120	17	0.	0.0	80.3	22	JUN	0320	41	16.	1.2	87.1	22	JUN	0520	65	1.	0.0	80.6
22	JUN	0125	18	0.	0.0	80.3	22	JUN	0325	42	16.	1.2	87.1	22	JUN	0525	66	0.	0.0	80.2
22	JUN	0130	19	0.	0.0	80.3	22	JUN	0330	43	16.	1.2	87.1	22	JUN	0530	67	1.	0.0	80.6
22	JUN	0135	20	0.	0.0	80.3	22	JUN	0335	44	16.	1.1	86.9	22	JUN	0535	68	0.	0.0	80.2
22	JUN	0140	21	0.	0.0	80.3	22	JUN	0340	45	16.	1.0	86.7	22	JUN	0540	69	1.	0.0	80.5
22	JUN	0145	22	0.	0.0	80.3	22	JUN	0345	46	15.	0.9	86.4	22	JUN	0545	70	0.	0.0	80.2
22	JUN	0150	23	0.	0.0	80.3	22	JUN	0350	47	15.	0.8	86.2	22	JUN	0550	71	1.	0.0	80.5
22	JUN	0155	24	1.	0.0	80.3	22	JUN	0355	48	15.	0.7	86.0	22	JUN	0555	72	0.	0.0	80.2

MEMO

Date: **February 26, 2001**

To: **Development & Review Board**

From: **MS Development / Great Basin Engineering**

Re: **Kmart at Central & Coors**

The following is a list of responses to each of the areas of concern addressed at the DRB Hearing

Comment: TIS negotiations need to be completed.

Response: *An additional Cost Estimate has been submitted to Richard Dourte. This Cost Estimate will allow the negotiations to be finalized.*

Comment: Vacation of Airport Road, rededication on alternate to Airport Road with required Improvements.

Response: *The vacation of Airport Road was previously approved by the City and the Subdivision Plat is the last step in finalizing this process, the Subdivision Plat is being resubmitted for approval of the DRB.*

Comment: Construction of realignment of Airport Road Bikeway as part of alternate alignment on the western and southern property lines.

Response: *As per a meeting with Joe David Montano, a revised 6-foot bike lane has been identified on the site plan to be constructed in the Western and Southern Loop Road. This bike lane will be striped and signed per the City of Albuquerque Standards.*

Comment: NMSH & TD apparently does not object to the modified Coors Access with left turn in only access.

Response: *NMSH & TD have previously approved the access as shown on the plans.*

Comment: Central Avenue entrance must align with Airport Road (north of Central); provision of a 100-foot throat area for queuing.

Response: *The main entrance to the site has been clarified to align with the turning movements on Airport Road as shown on the site plan. The centerline of Airport Road will line up with the east side of the driveway median.*

Comment: Individual Pad Sites must be self-Contained.

Response: *All individual Pads Sites have been designed to Self Park and meet City Parking Criteria.*

Comment: Cross-access / parking easements between site pads and Kmart. (include on plat also)

Response: *The Subdivision Plat will indicate cross-access and parking easements per the legal documents between MS Development and Kmart covering cross-access, parking, and drainage.*

Comments: Parking lot must meet DPM Standards, i.e., circulation, parking spaces and end islands.

Responses: *Our current site plan meets all requirements as stated and confirmed by staff.*

Comment: Drive-thru on Tract C needs spatial separation from main entrance.

Responses: *The drive-thru on Tract C has been moved eastward to allow a 50-foot separation from the main drive aisle to the drive-thru exit to accommodate proper spacing.*

Comment: Comments on infrastructure list.

Response: *The infrastructure list has been amended as attached.*

Comment: Subdivision Plat.

a. The Centerline radius minimum is 300 feet
b. There needs to be a future extension of the street shown
c. Radii are needed at the new street (name?) and Central intersection.

Response: *Subdivision Plat*

a. The site plan and subdivision plat have been modified to a accommodate the centerline radius minimum of 300 feet.
b. Future street has been indicated on the subdivision plat as requested.
c. The radii have been modified as suggested.

Comment: Grading and Drainage plan.

Response: The Grading and Drainage plan has been resubmitted to the Hydrology Department for it's review.

Comment: Public Utilities

a. Stub-outs to the south of the Loop Road.
b. The total fire demand.
c. Modify detention basin to 2' depth over water and sewer lines.

Response:

a. The Utility plan identifies future stub-outs to be constructed on the east and the west end of the Southern Loop Road. A Stub-out has also been planned to stub to the west at the intersection of the western and southern Loop Road.

b. The total fire demand for the proposed project is 2400 gallon per minute per Mike Montoya at the Fire Marshall's Office. Roger Green also determined that the fire hydrant in question at the northeast corner of the building will be adequately serviced off the existing 6" waterline.

c. The detention basin has been modified as directed.

Comment: Loop Road waterline needs to connect with 12" waterline in Central Avenue.

Response: The plans identify the connection as requested by Staff.

Comment: The Lightpole detail was improperly worded.

Response: The plans now include the proper wording form the EPC conditions of approval.

Comment: Kmart water meter size.

Response: Kmart water meter has been identified as a 2 ½ inch meter.

Bohannan ▲ Huston

FACSIMILE TRANSMITTAL COVER SHEET

BOHANNAN HUSTON
Courtyard One
7500 JEFFERSON NE
Albuquerque
NEW MEXICO 87109
voice 505.823.1000
fax 505.821.0892

Date: March 2, 2001

To: Carlos Montoya – 768-2765

Jude Baca – 883-6013

Bret Wahlen – 801-521-9551

Company:

Fax No.:

From: Rick Beltramo

Project No: **Project Name:**

Number of Pages to Follow (Including Cover): 4

Re:

Comments:

Original to Follow: ☐ **Yes**

If you do not receive all pages, please contact _____at 823-1000.

February 28, 2001

Mr. Carlos Montoya, P.E.
City Drainage Engineer
City Of Albuquerque
VIA FAX

Re: Coors/Milligan Project – K-Mart Drainage Submittal Review

BOHANNAN-HUSTON, INC.
Courtyard One
7500 JEFFERSON NE
Albuquerque
NM 87109-4335
voice 505.823.1000
fax 505 821.0892

Dear Carlos:

The purpose of this letter is to review the K-Mart drainage plan with respect to the adjacent property to the south property, owned by Mr. Patrick Milligan and Mr. Jude Baca. In general the submittal is complete and satisfactory. However, I have identified some minor items that need to be addressed prior to the City granting approval.

1 Grading of the east-west loop road (from Coors Blvd. to the north-south loop road) has the road 2-3 ft. in fill adjacent to the Milligan property. Yet, on the K-mart side the road is very close to existing grade. This portion of the loop road should be lowered to place the road closer to existing grade on the south side of the right-of-way. This condition is unacceptable to the owners.

Attached is a mark-up that shows the area of concern and approximate fill heights. I believe that with minimal revisions to the design the road can be lowered to be equal to the grade of the south property. To do this the storm drain inlets in the loop road may also have to be relocated.

2 The north-south loop road (located east of the building) intercepts existing drainage originating from the west (the Hubbell Tract). The topography provided on the grading plan doesn't identify where the offsite basin limits are. Some area is flowing to the road and would free discharge to the Coors Storm Drain. No flow developed or undeveloped should be allowed to discharge directly to the loop road.

I only received a complete package to review on Wednesday, February 28, 2001. I apologize for the late comments and hope that this doesn't inconvenience you. If you have any questions please call me anytime.

Sincerely,
Bohannan Huston, Inc.

Rick Beltramo, P.E.
Senior Engineer, Community Development
and Planning Group

Attachments
cc: Jude Baca
James Topmiller, Bohannan Huston, Inc.
Bret Wahlen, Great Basin Engineering

P:\99443\cdp\corres\001-due_diligence\K-mart review 02 28 01.doc

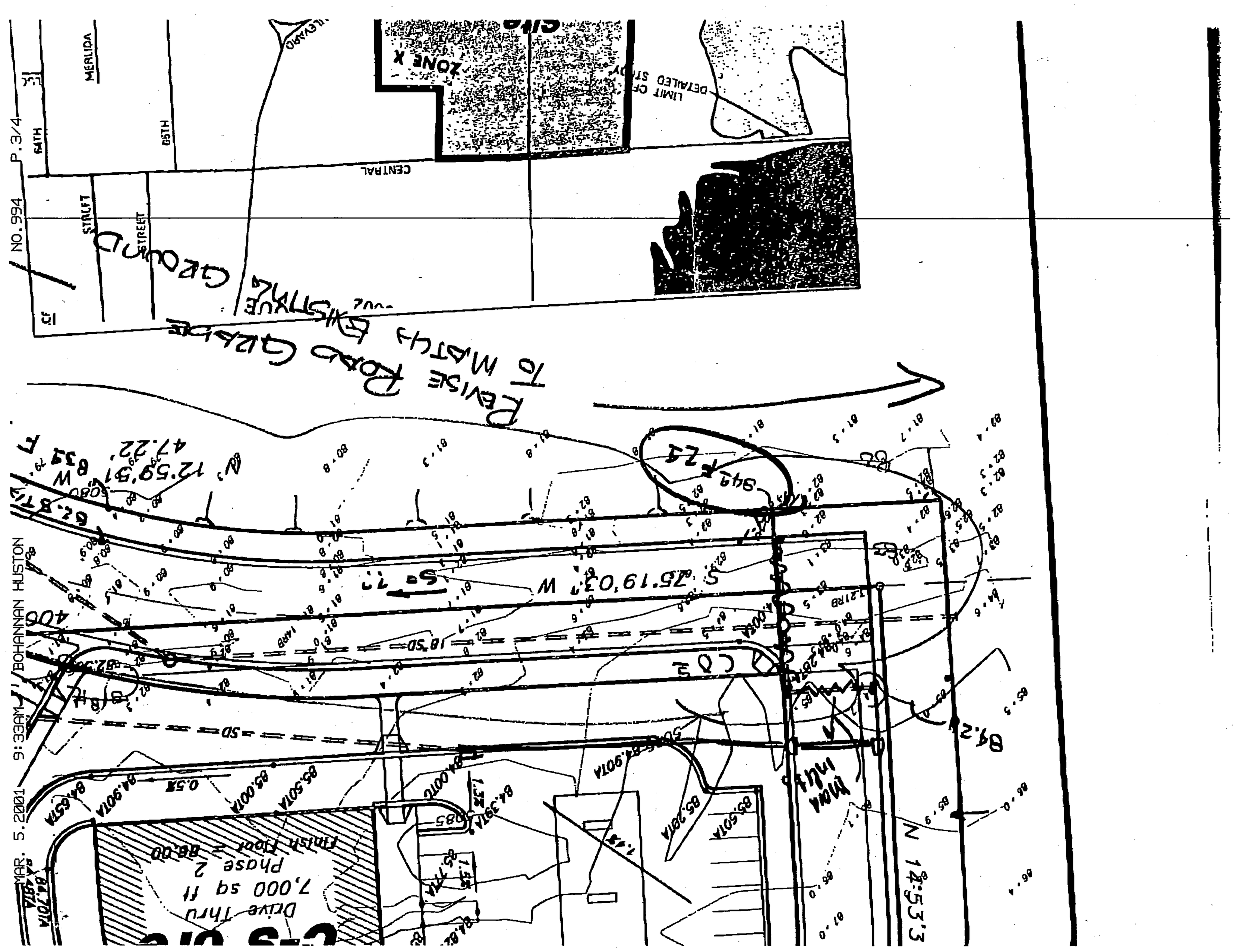
MAR. 5.2001 9:33AM BOHANNAN HUSTON
NO.994 P.3/4
CF
STRUFT
STREET
64TH
65TH
MERLIDA
CENTRAL
ZONE X
LIMIT OF DETAILED STUDY
Revise Road Closure To Match Existing County
S 25°19'03" W
50'
18'50
CB2
Drive Thru 7,000 sq ft Phase 2 Finish Floor = 86.00
Main Bldg
N 14°53'3
S42
Z1
N 12°59'31" W 47.22' 832 FT

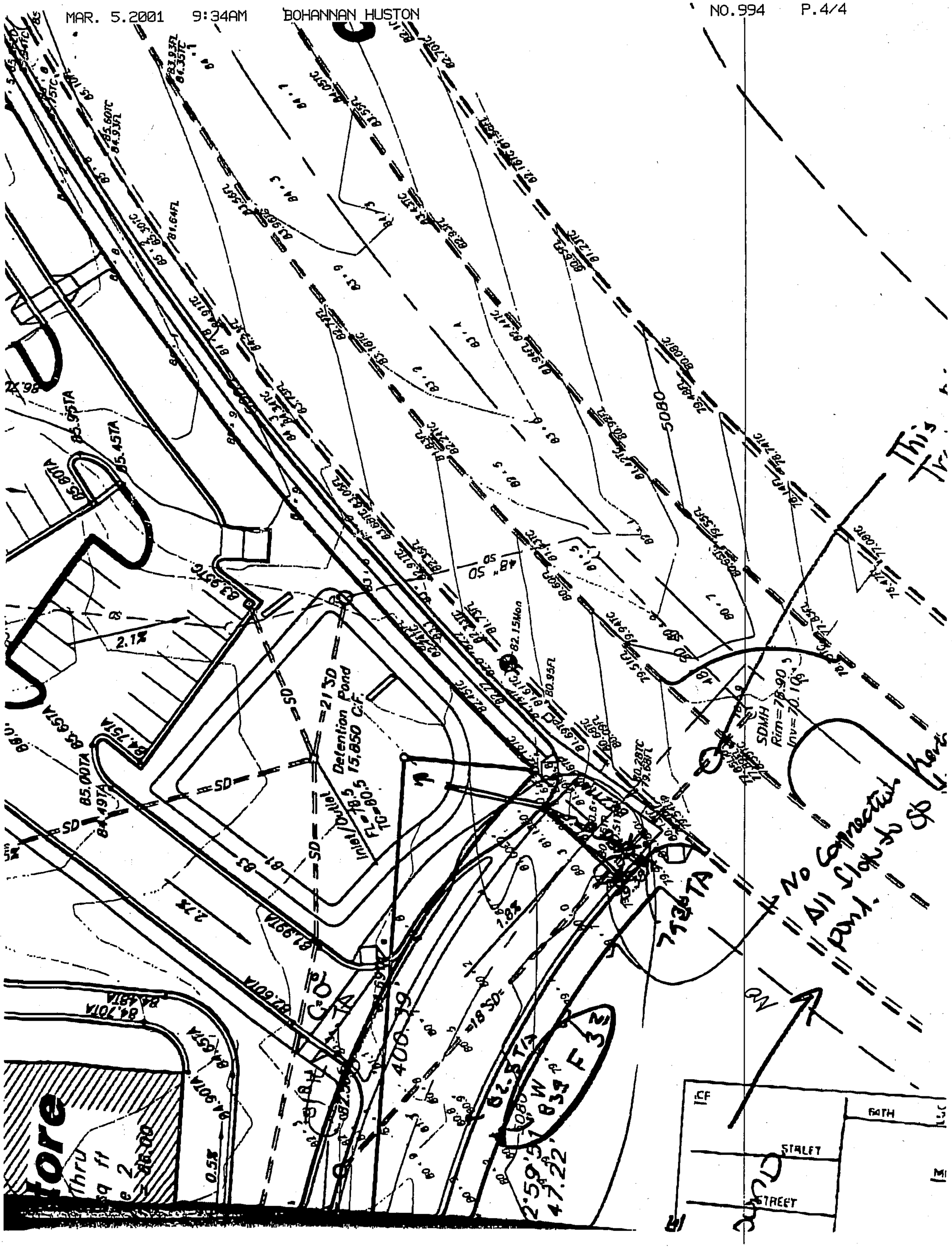
Detention Pond
15,850 C.F.
Inlet/Outlet
FL=78.5
TC=80.5
SDMH
Rim=78.90
Inv=70.10
No Connection
All Slopes to Pond.
STREET
BATH
2.1%
1.8%
0.5%
2.7%

City of Albuquerque
P.O. BOX 1293 ALBUQUERQUE, NEW MEXICO 87103

March 2, 2001

Bret Wahlen
Great Basin Engineering
2010 North Redland Road
P.O. Box 16747
Salt Lake City, Utah 84116

RE: Grading and Drainage Plan for Central K-Mart (K10-D36) Dated February 27, 2001

Dear Mr. Wahlen:

The above referenced plan received February 27, 2001 is approved by Hydrology for Rough Grading, Site Plan for Building Permit and for Preliminary Plat. Prior to Building Permit approval the following items will need to be addressed.

1. Show elevations on the Loop Road to determine how it relates to the undeveloped property to the west and south. Also, show the existing grades on the plan.
2. The existing property to the northeast has to be shown on your drainage plan. Show how the runoff will be reduced to correspond with the master plan.
3. The proposed outfall storm drain to the existing storm drain uses Manning Equation to determine the flow. Due to the fluctuation of the pond depth the discharge will change. It seems that you should used a inlet control equation.
4. Show the capacity of all the private and public storm drains.

If you have any questions please call me a 924-3982.

Sincerely,

Carlos A. Montoya
City/County Floodplain Administrator

THE CITY OF ALBUQUERQUE IS AN EQUAL OPPORTUNITY/REASONABLE ACCOMMODATION EMPLOYER

SURV-TEK, Inc.
Consulting Surveyors
5643 Paradise Blvd. N.W. Albuquerque, New Mexico 87114
Phone: 505-897-3366 Fax: 505-897-3377

LETTER OF TRANSMITTAL

DATE 2-28-01 JOB NO

RE REVISED COORS PLAZA

TO CITY OF ALBUQUERQUE

FROM RUSS HUGG

PROJECT # 1000494

ATTN: LOREN MEINZ, CITY ENGINEER

RECEIVED MAR 01 2001 PWD/DESIGN REVIEW 10:20 am

VIA: ☐ Parcel Post ☐ First Class ☐ Air Mail ☐ Special Delivery ☒ Messenger
☐ Air Freight via ☐ RR Express ☐ Other

GENTLEMEN: WE ARE SENDING YOU ☐ Attached ☐ Under separate cover

☐ Shop drawings ☐ Prints ☐ Plans ☐ Samples ☐ Specifications
☐ Copy of letter ☐ Change order ☐ Payrolls ☐

QUANT.	DATED	NO.	DESCRIPTION
1			SET REVISED PLAT (5 SHEETS) 01440-00000-00183 (PF)

THESE ARE TRANSMITTED as checked below:

☒ For approval ☐ Approved as submitted ☐ Resubmit copies for approval
☒ For your use & information ☐ Approved as noted ☐ Submit copies for distribution
☒ As requested ☐ Returned for corrections ☐ Return corrected prints
☒ For review and comment ☐
☐ FOR BIDS DUE 19 ☐ PRINTS RETURNED AFTER LOAN TO US

REMARKS Carlos check for easements

COPY TO SIGNED

DRAINAGE INFORMATION SHEET

PROJECT TITLE: Kmart Central & Coors ZONE MAP/DRG. FILE #: K-10/D036
DRB #: _____ EPC#: _____ WORK ORDER#: _____

LEGAL DESCRIPTION: _____
CITY ADDRESS: SWC Central & Coors

ENGINEERING FIRM: Great Basin Engr. CONTACT: Bret Wahlen
ADDRESS: 2010 N. Redwood Road PHONE: 801-521-8529
CITY, STATE: SLC, Utah 84116 ZIP CODE: 84116

OWNER: MS Development CONTACT: Paul Pietsch
ADDRESS: _____ PHONE: [redacted]5
CITY, STATE: _____ ZIP CODE: _____

ARCHITECT: _____ CONTACT: _____
ADDRESS: _____ PHONE: _____
CITY, STATE: _____ ZIP CODE: _____

SURVEYOR: _____ CONTACT: _____
ADDRESS _____ PHONE: _____
CITY, STATE: _____ ZIP CODE: _____

CONTRACTOR: _____ CONTACT: _____
ADDRESS: _____ PHONE: _____
CITY, STATE: _____ ZIP CODE: _____

TYPE OF SUBMITTAL:
- ✓ DRAINAGE REPORT AMEND
- ____ DRAINAGE PLAN
- ✓ CONCEPTUAL GRADING & DRAINAGE PLAN
- ✓ GRADING PLAN
- ____ EROSION CONTROL PLAN
- ____ ENGINEER'S CERTIFICATION
- ____ CLOMR/LOMR
- ____ OTHER

WAS A PRE-DESIGN CONFERENCE ATTENDED:
- ____ YES
- ____ NO
- ____ COPY PROVIDED

CHECK TYPE OF APPROVAL SOUGHT:
- ____ SIA / FINANCIAL GUARANTEE RELEASE
- ____ PRELIMINARY PLAT APPROVAL
- ____ S. DEV. PLAN FOR SUB'D. APPROVAL
- ____ S. DEV. PLAN FOR BLDG. PERMIT APPROVAL
- ____ SECTOR PLAN APPROVAL
- ____ FINAL PLAT APPROVAL
- ____ FOUNDATION PERMIT APPROVAL
- ____ BUILDING PERMIT APPROVAL
- ____ CERTIFICATE OF OCCUPANCY APPROVAL
- ____ GRADING PERMIT APPROVAL
- ____ PAVING PERMIT APPROVAL
- ____ WORK ORDER APPROVAL
- ____ OTHER (SPECIFY)

DATE SUBMITTED: 2/22/01 BY: _____

Requests for approvals of Site Development Plans and/or Subdivision Plats shall be accompanied by a drainage submittal. The particular nature , location and scope ot the proposed development defines the degree of drainage detail. One or more of the following levels of submittal may be required based on the following:

1. **Conceptual Grading and Drainage Plan**: Required for approval of Site Development Plans greater than five (5) acres and Sector Plans.
2. **Drainage Plans**: Required for building permits, grading permits, paving permits and site plans less than five (5) acres.
3. **Drainage Report**: Required for subdivisions containing more than ten (10) lots or constituting five (5) acres or more.

City of Albuquerque
P.O. BOX 1293 ALBUQUERQUE, NEW MEXICO 87103

February 12, 2001

Bret Wahlen
Great Basin Engineering
2010 North Redland Road
P.O. Box 16747
Salt Lake City, Utah 84116

RE: Grading and Drainage Plan for Central K-Mart (K10-D36) Dated January 17, 2001

Dear Mr. Wahlen:

I have reviewed the referenced plan received January 19, 2001 and forward the following comments.

1. Please submit a phasing plan showing how the drainage will be accomplished for the different stores and properties. Are all the different drainage infrastructures going to be built at once?
2. Will there be different Building Permits and Certificates of Occupancy for the different stores. Is this plan going to be the master plan and then the different stores will come in at different times.
3. There are different tracts of property in the site. Please submit agreements that allows cross lot drainage and who will maintain the private drainage infrastructure.
4. Please submit a private drainage covenant for the detention ponds. There is a standard covenant that the City uses for this process.
5. Is there off site flow coming from the east side such as the existing motel? Historic off site flows need to be accepted on to your site
6. Please show in more detail the one foot water block in the entrances coming from Central Avenue.
7. Since the Proposed Loop Road is being constructed under this development, the road drainage will need to be addressed.
8. Please submit drainage calculations on your private storm drain and inlets.
9. Please show the trench prism for the vacated Airport Drive. Show the storm drain and the Sanitary Sewer.

THE CITY OF ALBUQUERQUE IS AN EQUAL OPPORTUNITY/REASONABLE ACCOMMODATION EMPLOYER

10. The proposed Loop Road will have to be processed through DRC.
11. Please show more details on the Ponds and the outlet/inlets.

If you have any questions please call me a 924-3982.

Sincerely,

Carlos A. Montoya
City/County Floodplain Administrator

GREAT BASIN ENGINEERING
P.O. Box 16747 Salt Lake City, Utah 84116
Salt Lake City (801) 521-8529 Ogden (801) 394-7288
Fax (801) 521-9551

LETTER OF TRANSMITTAL

DATE 2/27/01
JOB NO.
ATTENTION Carlos
RE: Contrails / Coors Kmart / For MS Dev.

TO City of Alb.
Hydrology Dept.
"Hand Delivered"

WE ARE SENDING YOU ☐ Attached ☐ Under separate cover via _____ the following items:

☐ Shop drawings ☐ Prints ☐ Plans ☐ Samples ☐ Specifications
☐ Copy of letter ☐ Change order ☐ _____

COPIES	DATE	NO.	DESCRIPTION
3			Grading & Drainage Report
1			Response to Comments

RECEIVED
FEB 22 2001
HYDROLOGY SECTION

THESE ARE TRANSMITTED as checked below:

☐ For approval ☐ Approved as submitted ☐ Resubmit _____ copies for approval
☐ For your use ☐ Approved as noted ☐ Submit _____ copies for distribution
☒ As requested ☐ Returned for corrections ☐ Return _____ corrected prints
☒ For review and comment ☐ _____
☐ FOR BIDS DUE _____ ☐ PRINTS RETURNED AFTER LOAN TO US

REMARKS Carlos
We revised the study to include motel parcel and also reroute storm water from shops area to the large detention basin. The large basin was thus enlarged to accomidate these flows. We eliminate a basin on the C-store pad. Thus all basins can be built in phase 1 without limiting future development options on the pads. Since this is a amendment to original study the appendix information has not been included, please refer to original study for this information

COPY TO _____

SIGNED: Brent Wahlen

If enclosures are not as noted, kindly notify us at once.

GREAT BASIN ENGINEERING - South

2010 North Redwood Road • P.O. Box 16747 • Salt Lake City, Utah 84116
(801) 521-8529 • (801) 394-7288 • Fax (801) 521-9551

CONSULTING ENGINEERS
AND LAND SURVEYORS

February 20, 2001

RECEIVED
FEB 22 2001
HYDROLOGY SECTION

Carlos A. Montoya
City/County Floodplain Administrator
City of Albuquerque
P.O. Box 1293
Albuquerque, NM 87103

RE: Grading and Drainage Plan for Kmart on Central and Coors

Dear Carlos,

In response to your letter of February 12th regarding the Grading and Drainage Plan for the above referenced project the following are my written responses:

Comment 1: Please submit a phasing plan showing how the drainage will be accomplished for the different stores and properties. Are all the different drainage infrastructures going to be built at once?

Response: *The Kmart Building will be built in Phase I as well as the east phase of the Retail Shops. The other pads will be rough graded with storm drain lines stubbed into the Rough Graded Pads. All Storm drainage will be built in Phase I, including detention basins, catch basins, etc.*

Comment 2: Will there be different Building Permits and Certificates of Occupancy for the different stores? Is this plan going to be the master plan and then the different stores will come in at different times?

Response: *Yes, there will be individual building permits for each building. This plan will be the Master Plan for future development.*

Comment 3: There are different tracts of property in the site. Please submit agreements that allows cross lot drainage and who will maintain the private drainage infrastructure.

Response: *The subdivision plat has included blanket cross drainage easements to accommodate all required onsite drainage.*

Comment 4: Please submit a private drainage covenant for the detention ponds. There is a standard covenant that the City uses for this process.

Response: *The private drainage covenant is included.*

Comment 5: Is there off site flow coming from the east side such as the existing motel? Historic off site flows need to be accepted on to your site.

Response: *Flows from the existing motel have been accounted for in the updated storm water study. The Motel Site is planned for demolition as part of the overall site demolition. This Motel Site is currently under the ownership of the developer and will be built upon in the future. Appropriate erosion control shall be provided as a part of the DRC submittal. There are no other off-site flows entering the site. The Hubble Trust Property to the west flow to a drainage swell west of its property.*

Comment 6: Please show in more detail the one-foot water block in the entrances coming for Central Avenue.

Response: *There is a high point in Central Avenue opposite the Retail Shops, the street flows at this location will split and flow east and west. A small area of the street east of this location will pass our main driveway on Central. Thus we are only proposing to raise our driveway ½' due to the steep grades into our site and the small amount of water passing our site.*

Comment 7: Since the Proposed Loop Road is being constructed under this development, the road drainage will need to be addressed.

Response: *The drainage on Loop Road will be collected via a storm drain that will be extended and built for that purpose, as shown on the grading plan.*

Comment 8: Please submit drainage calculations on your private storm drain inlets.

Response: *Per our discussions, you directed us to provide these comments with the DRC submittal or building permit phase.*

Comment 9: Please show the trench prism for the vacated Airport Drive. Show the storm drain and the Sanitary Sewer.

Response: *The cross-section on the storm drain and sanitary sewer in Airport Drive has been included.*

Comment 10: The Proposed Loop Road will have to be processed through DRC.

Response: *Noted.*

Comment 11: Please show more details on the Pond and the outlet/inlets.

Response: *The inlet/outlet boxes will be simple boxes or manholes as needed with sufficient grating on top to allow the storm water to bubble up into the detention areas when the outlet pipe has reached capacity.*

Additional Comments: *Erosion control will be provided on each individual pad with a 1" coarse of gravel.*

GREAT BASIN ENGINEERING - South

2010 North Redwood Road • P.O. Box 16747 • Salt Lake City, Utah 84116
(801) 521-8529 • (801) 394-7288 • Fax (801) 521-9551

CONSULTING ENGINEERS
AND LAND SURVEYORS

DRB PROJECT NO: 10000494
DRC PROJECT NO:
DATE SUBMITTED:

DEVELOPMENT REVIEW BOARD
REQUIRED INFRASTRUCTURE LISTING
FOR
M S DEVELOPMENT, LLC
KMART SHOPPING CENTER
BETWEEN CENTRAL AVENUE AND
COORS BOULEVARD

Following is a summary of Public/Private Infrastructure required to be constructed or financially guaranteed to be constructed for the above development. This summary is not necessarily a complete listing. During the design process, if the City determines that appurtenant items have not been included in the summary, those items will be included in the listing and related financial guarantee, if the items normally are Developer responsibility. In addition, any unforeseen items which arise during Developer's responsibility are the responsibility of the Developer and will be included in the financial guarantee provided to the City.

SIZE	IMPROVEMENT	LOCATION (FROM – TO)
8"	Waterline	Loop from Coors Blvd. to Central Ave.
6"	Waterline	From Waterline Loop to Fire Hydrant
6"	Fire Hydrants	(5 Total) On-Site
6"	Sanitary Sewer	Various Laterals to Proposed Buildings
6'	Sidewalk	Coors Blvd. along Project Frontage
10'	Hike/Bike Path	Central Ave. and Loop Rd. to Coors Blvd.
4'	Valley Gutter	All Entrances and Deceleration Lanes
Standard	Curb and Gutter	Southside Central Ave., Eastside Loop Rd. (west leg_, both sides Loop Rd. (south leg) and Coors Blvd Widening North Side

Standard	Arterial Paving, Curb & Gutter, Sidewalk.	Central Ave. Widening and Deceleration Lane, Loop Rd. (west leg) partial section of 30' wide Asphalt and with 6' Striped Bike Lane. Coors Blvd. Widening and Deceleration. Loop Rd. (south leg) 40' Curb and Gutter with the Sidewalk on North side only.
Standard	Curb & Gutter	Remove Right Turn in/out Access on Coors Blvd.
Standard	Median	Revise and Construct Median in Central Ave. East of Airport Dr. to accommodate Left Turn Access to the Site.
Standard	Median	Modify and extend Median in Central Ave. West of Airport Dr. to accommodate Left Turn Access to Airport Dr. and Loop Rd.
Standard	Median	Modify and Shorten Median North of Proposed Loop Rd. to accommodate Left Turn Access to Property North of Central and Loop Rd.
Standard	Median	Modify and Construct 250' Left Turn Lane And Opening on Coors Blvd. for Left in to Loop Rd.
Standard	Median 13.4 % Participation	Add Southbound left turn lane at the Intersection of Unser and Central.
Standard	Intersection 7.7 % Participation	Modification of Coors Road and Central Ave. intersection to include the right turn lane. Three lanes and dual left turn lanes on all 4 approaches.

PREPARED BY: _____

BRET GENE WAHLEN
NEW MEXICO
12972
REGISTERED PROFESSIONAL ENGINEER

Great Basin Engineering, Inc.

Development Review Board Member Approvals

Traffic	Date	PWD	Date
Parks & Rec.	Date	City Engineer	Date

DRB Chairman Date

GREAT BASIN ENGINEERING - South

2010 North Redwood Road • P.O. Box 16747 • Salt Lake City, Utah 84116
(801) 521-8529 • (801) 394-7288 • Fax (801) 521-9551

CONSULTING ENGINEERS
AND LAND SURVEYORS

February 27, 2001

Attn: Carlos A. Montoya
City/County Flood Plain Administrator
City of Albuquerque
P.O. Box 1293
Albuquerque, NM 87103

Re: Grading Permit – MS Development, Central & Coors

Dear Carlos:

Paul Pietsch of MS Development has indicated that we need to formally submit for a Grading Permit on their behalf. This letter will formerly serve as the application for said Grading Permit. Enclosed are additional copies of the Grading Plan for said Grading Permit application.

Paul also indicated that we include the Erosion Control notes and a signature block. These further details have been added to the plans for your review.

If you have any question, please contact me.

Sincerely,

Bret Wahlen, P.E.
Vice President

City of Albuquerque
P.O. BOX 1293 ALBUQUERQUE, NEW MEXICO 87103

March 2, 2001

Bret Wahlen
Great Basin Engineering
2010 North Redland Road
P.O. Box 16747
Salt Lake City, Utah 84116

RE: Grading and Drainage Plan for Central K-Mart (K10-D36) Dated February 27, 2001

Dear Mr. Wahlen:

The above referenced plan received February 27, 2001 is approved by Hydrology for Rough Grading, Site Plan for Building Permit and for Preliminary Plat. Prior to Building Permit approval the following items will need to be addressed.

1. Show elevations on the Loop Road to determine how it relates to the undeveloped property to the west and south. Also, show the existing grades on the plan.
2. The existing property to the northeast has to be shown on your drainage plan. Show how the runoff will be reduced to correspond with the master plan.
3. The proposed outfall storm drain to the existing storm drain uses Manning Equation to determine the flow. Due to the fluctuation of the pond depth the discharge will change. It seems that you should used a inlet control equation.
4. Show the capacity of all the private and public storm drains.

If you have any questions please call me a 924-3982.

Sincerely,

Carlos A. Montoya
City/County Floodplain Administrator

THE CITY OF ALBUQUERQUE IS AN EQUAL OPPORTUNITY/REASONABLE ACCOMMODATION EMPLOYER

DRAINAGE INFORMATION SHEET

KMART - Coors + Central

APPLICANT'S NAME: MS Development ZONE ATLAS/DRNG. FILE #: K-10 / D036

DRB #: _____ EPC #: 00110 00000 00596 WORK ORDER #: _____

LEGAL DESCRIPTION: See Attached

CITY ADDRESS: _____

ENGINEERING FIRM: Great Basin Engineering CONTACT: Bret Wahlen

ADDRESS: 2010 N. Redwood Rd. SLC, UT, 84116 PHONE: (801) 521-8529

OWNER: MS Development CONTACT: Paul Pietsch

ADDRESS: 12626 High Bluff Dr. Ste 330, San Diego CA 92130 PHONE: (858) 259-3117 x13

ARCHITECT: _____ CONTACT: _____

ADDRESS: _____ PHONE: _____

SURVEYOR: _____ CONTACT: _____

ADDRESS: _____ PHONE: _____

CONTRACTOR: _____ CONTACT: _____

ADDRESS: _____ PHONE: _____

TYPE OF SUBMITTAL:

- X DRAINAGE REPORT
- X DRAINAGE PLAN
- ___ CONCEPTUAL GRADING & DRAINAGE PLAN
- X GRADING PLAN
- ___ EROSION CONTROL PLAN
- ___ ENGINEER'S CERTIFICATION
- ___ OTHER _____

PRE-DESIGN MEETING:

- X YES
- ___ NO
- ___ COPY PROVIDED

CHECK TYPE OF APPROVAL SOUGHT:

- ___ SKETCH PLAT APPROVAL
- X PRELIMINARY PLAT APPROVAL
- ___ S. DEV. PLAN FOR SUB'D APPROVAL
- ___ S. DEV PLAN FOR BLDG. PERMIT APPROVAL
- ___ SECTOR PLAN APPROVAL
- X FINAL PLAT APPROVAL
- ___ FOUNDATION PERMIT APPROVAL
- X BUILDING PERMIT APPROVAL
- ___ CERTIFICATE OF OCCUPANCY APPROVAL
- ___ GRADING PERMIT APPROVAL
- ___ PAVING PERMIT APPROVAL
- ___ S.A.D. DRAINAGE REPORT
- ___ DRAINAGE REQUIREMENTS
- ___ SUBDIVISION CERTIFICATION
- ___ OTHER _____ (SPECIFY)

DATE SUBMITTED: 1/17/01

BY: _____

Revised 02/98

RECEIVED
JAN 19 2001
HYDROLOGY SECTION

Legal Description

Tracts 57, 58 and "B" and Portions of Tracts 59 and 60, Town of Atrisco, Grant Unit 6, together with a Portion of Airport Drive S.W., City of Albuquerque, Bernalillo County, New Mexico

RECEIVED
JAN 19 2001
HYDROLOGY SECTION

CONSULTING ENGINEERS
AND LAND SURVEYORS

GREAT BASIN ENGINEERING – South

2010 North Redwood Road • P.O. Box 16747 • Salt Lake City, Utah 84116
(801) 521-8529 • (801) 394-7288 • Fax (801) 521-9551

LETTER OF TRANSMITTAL

Date: 01/17/01	Job No.: 99-80
Attention: Margaret Garcia	
Re: ~~MS Development~~ - Coors & Central	
KMART	

To: City of Albuquerque
Planning Department
600 2nd Street NW
Albuquerque, NM 87102

JAN 2001
Received
Planning Dept.

WE ARE SENDING YOU ☒ Attached ☐ Reproducible originals

☐ Shop Drawings ☐ Prints ☐ Plans ☐ Disk ☐ Specifications

☐ Addendum ☐ Change order ☐ _____

COPIES	DATE	DESCRIPTION
2	01/17/01	Storm Water Studies

THESE ARE TRANSMITTED as checked below:

☒ For approval ☐ Approved as submitted ☐ Please sign and return

☐ For your use ☐ Approved as noted

☐ As requested ☐ Returned for corrections

☐ For review and comment ☐ Other _____

REMARKS

Shipping Instructions:

☒ Fed Ex (Standard) (Priority overnight) ☐ U.S. Mail ☐ Hand Delivery
Phone #:(505) 924-3936
☐ Priority Mail ☐ Other _____

Copy to: _____

From: ROBERT SCHMIDT

GREAT BASIN ENGINEERING – South
CONSULTING ENGINEERS AND LAND SURVEYORS

2010 North Redwood Road • P.O. Box 16747 • Salt Lake City, Utah 84116
(801) 521-8529 • (801) 394-7288 • Fax (801) 521-9551

LETTER OF TRANSMITTAL

Date: 3-23-01	Job No.:
Attention: Margaret Garcia	
Re:	
MS Dev - Coors & Central	
K10/D36	

To: City of Albuquerque
Planning Dept.
600 2nd Street NW
Albuquerque, NM 87102

WE ARE SENDING YOU ☒ Attached ☐ Reproducible originals

☐ Shop Drawings ☒ Prints ☐ Plans ☐ Disk ☐ Specifications

☐ Addendum ☐ Change order ☐ ____

COPIES	DATE	DESCRIPTION
1		Response letter for Carlos Montoya

THESE ARE TRANSMITTED as checked below:

☒ For approval ☐ Approved as submitted ☐ Please sign and return

☐ For your use ☐ Approved as noted

☐ As requested ☐ Returned for corrections

☐ For review and comment ☐ Other ____

REMARKS Please deliver to Carlos, thankyou

Shipping Instructions:

☒ Fed Ex (Standard) (Priority overnight) ☐ U.S. Mail ☐ Hand Delivery
Phone #:505-924-3936
☐ Priority Mail ☐ Other ____

Copy to: ____

From: KIRK RANDALL

For Approval
of Building
permit.

GREAT BASIN ENGINEERING - South

2010 North Redwood Road • P.O. Box 16747 • Salt Lake City, Utah 84116
(801) 521-8529 • (801) 394-7288 • Fax (801) 521-9551

CONSULTING ENGINEERS
AND LAND SURVEYORS

March 20, 2001

Carlos A. Montoya
City of Albuquerque
P.O. Box 1293
Albuquerque, New Mexico 87103

RE: Grading and Drainage Plan for Central K-mart (K10-D36)

Dear Mr. Montoya,

In response to your letter of March 2nd I offer the following:

Comment: *Show elevations on the Loop Road to determine how it relates to the undeveloped property to the west and south. Also, show the existing grades on the plan.*

Response: The elevations and existing grades have been shown as requested.

Comment: *The existing property to the northeast has to be shown on your drainage plan. Show how the runoff will be reduced to correspond with the master plan.*

Response: The existing property has been accounted for in the overall drainage study which was previously submitted to you. While no improvements are planned for that parcel at this point in time water from that area naturally drains to a low point and then will cross to the Kmart parking lot via a curb cut and water way. The pipe sizes have been designed accordingly.

Comment: *The proposed outfall storm drain to the existing storm drain uses Manning's Equation to determine the flow. Due to the fluctuation of the pond depth the discharge will change. It seems that you should use an inlet control equation.*

Response: An orifice plat has been designed for each of the outfall pipes from a detention basin. Those calculations are attached for your review.

Comment: *Show the capacity of all the private and public storm drains.*

Response: The drainage basins as outlined in the hydrology study were broken down to sub-areas which were then analyzed using the rational method as set forth in section 22.2 of the DPM. Peak flows for the 10-year event were

calculated and pipe sizes were calculated based on the calculated flows. The sub-areas and the associated pipe calculations are included for your review. The storm drain line in Isabell Street has been sized to receive water from Amanda Street and 13.33 cfs from approximately 10 acres of undeveloped land to the west. The following table summarizes the flows and pipe sizes for each area.

Areas Designation	Flow (cfs)	Slope (%)	Pipe Size (inches)
A1-A2	1.83	0.6	12
A2-A3	3.34	0.6	15
A3-A4	9.23	0.5	21
A4-A5	11.51	0.5	21
A6-A5	2.7	0.92	12
A5-A7	16.50	0.5	24
A7-A11	17.83	1.9	21
A8-A9	4.66	0.7	15
A9-A10	6.80	0.7	18
A10-A11	8.95	0.7	18
B1-CP	2.32	0.5	12
B2-CP	.35	0.5	6
CP-B3	2.67	0.5	12
B4-B3	4.68	0.5	15
B3-B6	5.96	0.5	18
B5-B6	4.8	0.5	15
B6-B7	12.09	0.5	24
B7-B8	13.06	0.5	24
B12-B8	1.85	0.5	12
B8-B9	16.39	1.0	21
B13-B9	0.55	0.5	10
B11-B9	2.91	0.5	15
B10-B9	1.64	0.5	10
Isabell	18.33	1.0	24
10-Acre	13.33		

17.8
9.0
26.8

1.9
15.4
.6
1.7
20.6

If you have any additional comments or concerns, please feel free to contact me.

Sincerely,

Bret Wahlen, P.E.
Vice President

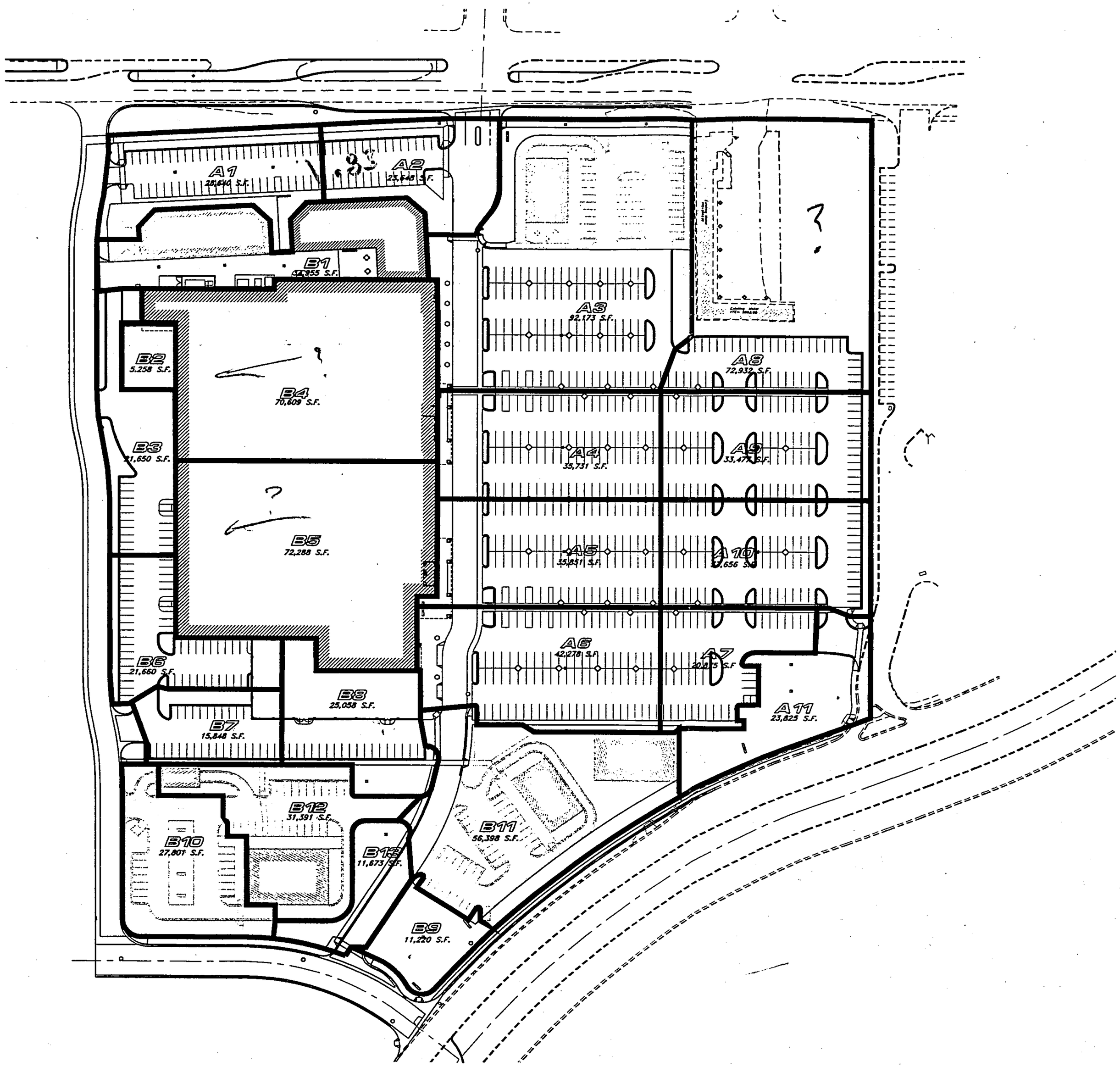

REV	DATE	DESCRIPTION

GREAT BASIN ENGINEERING - SOUTH
CONSULTING ENGINEERS and LAND SURVEYORS
2010 North Redwood Road, P.O. Box 16747
Salt Lake City, Utah 84116
Salt Lake City (801)321-8529 Ogden (801)394-7288 Fax (801)321-9551

M. S. Development
12626 High Bluff Road, Suite 330
San Diego, California 92130
Phone (858) 259-3117 Fax (858) 794-8956

20 Mar, 2001

SHEET NO.

99-80SW

W:\FIG\DATA\DWGS\99-80\Dwgs\99-80SW.DWG, Layout3, 03/20/2001 03:43:09 PM, djs

Cross Section
Cross Section for Circular Channel

Project Description	
Worksheet	A1-A2
Flow Element	Circular Channel
Method	Manning's Formula
Solve For	Channel Depth

Section Data		
Mannings Coefficient	0.013	
Slope	0.006000	ft/ft
Depth	0.59	ft
Diameter	12	in
Discharge	1.83	cfs

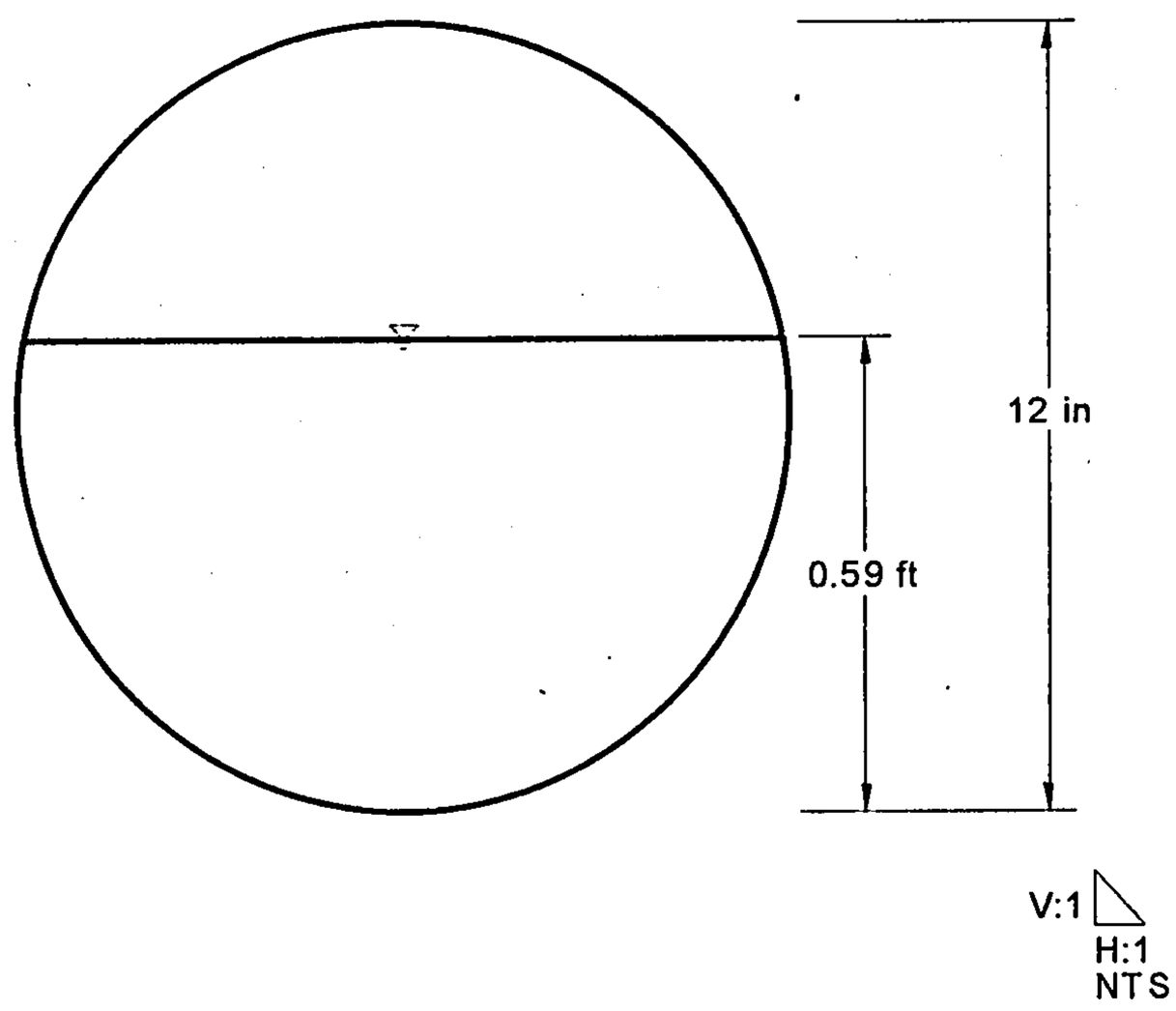

Cross Section
Cross Section for Circular Channel

Project Description	
Worksheet	A2-A3
Flow Element	Circular Channel
Method	Manning's Formula
Solve For	Channel Depth

Section Data		
Mannings Coefficient	0.013	
Slope	0.006000	ft/ft
Depth	0.75	ft
Diameter	15	in
Discharge	3.34	cfs

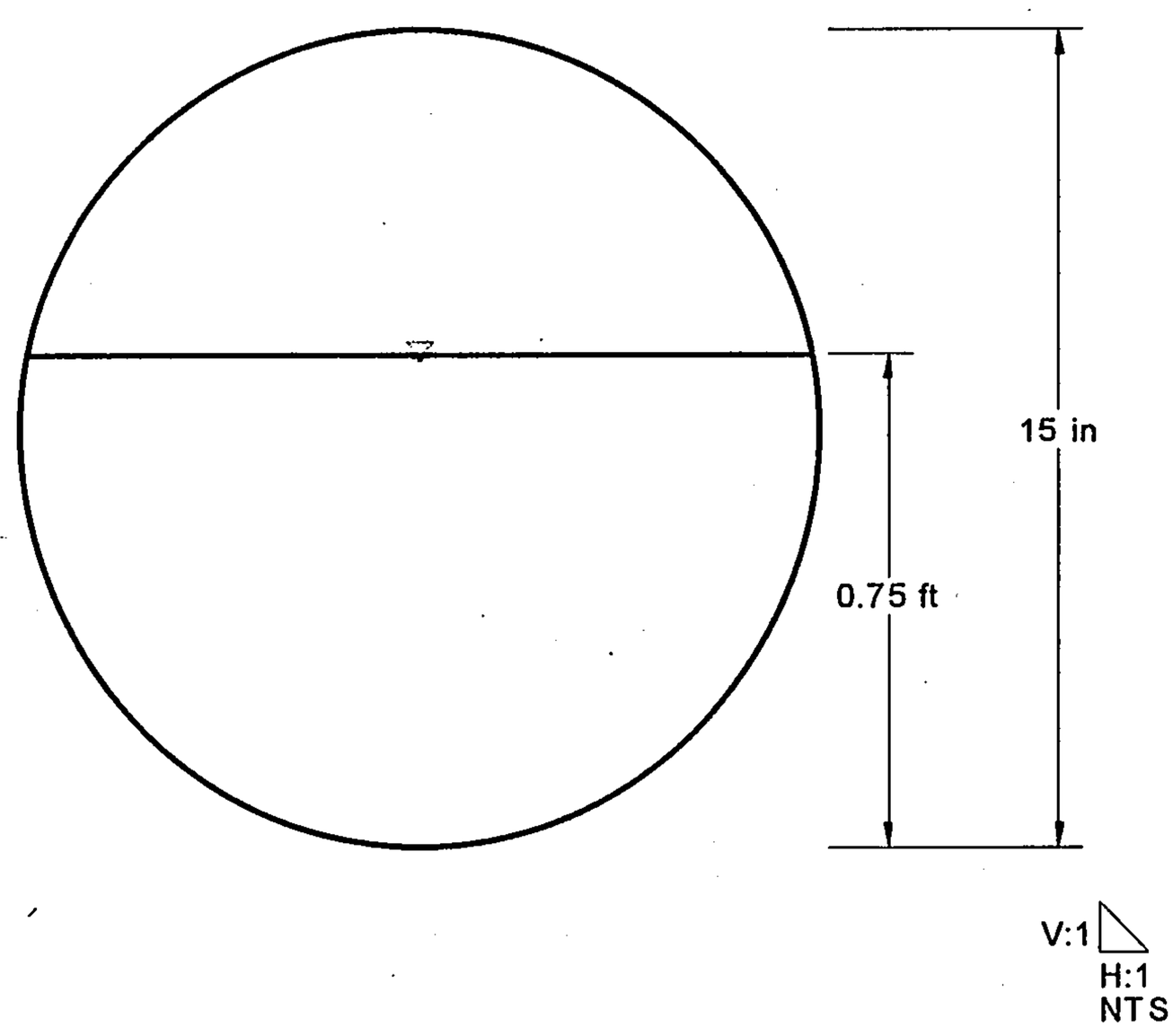

Cross Section
Cross Section for Circular Channel

Project Description	
Worksheet	A3-A4
Flow Element	Circular Channel
Method	Manning's Formula
Solve For	Channel Depth

Section Data		
Mannings Coefficient	0.013	
Slope	0.005000	ft/ft
Depth	1.21	ft
Diameter	21	in
Discharge	9.23	cfs

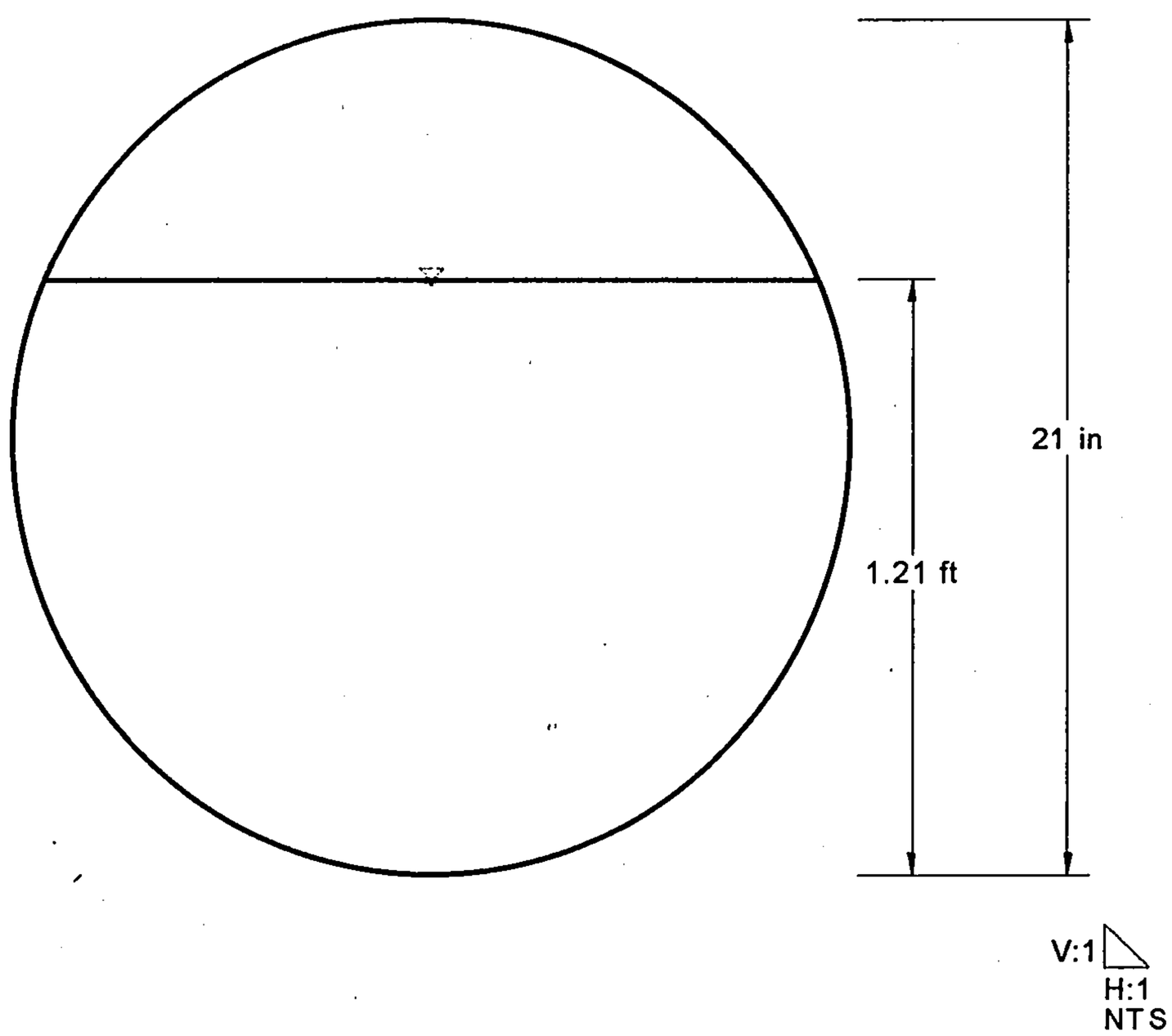

Cross Section
Cross Section for Circular Channel

Project Description	
Worksheet	A4-A5
Flow Element	Circular Channel
Method	Manning's Formula
Solve For	Full Flow Diameter

Section Data		
Mannings Coefficient	0.013	
Slope	0.005000	ft/ft
Depth	1.77	ft
Diameter	21	in
Discharge	11.51	cfs

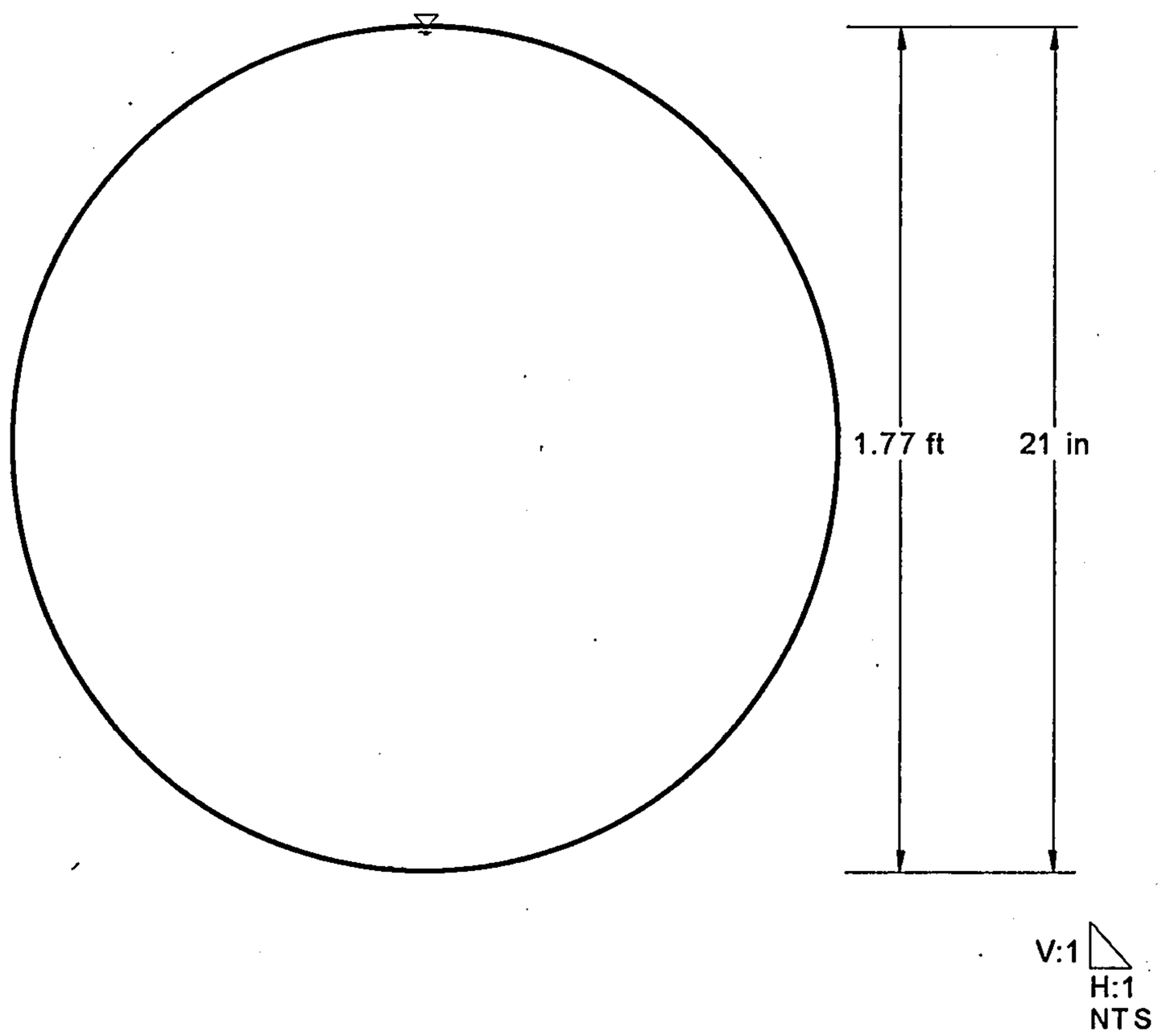

Cross Section
Cross Section for Circular Channel

Project Description	
Worksheet	A6-A5
Flow Element	Circular Channel
Method	Manning's Formula
Solve For	Channel Depth

Section Data		
Mannings Coefficient	0.013	
Slope	0.009200	ft/ft
Depth	0.67	ft
Diameter	12	in
Discharge	2.70	cfs

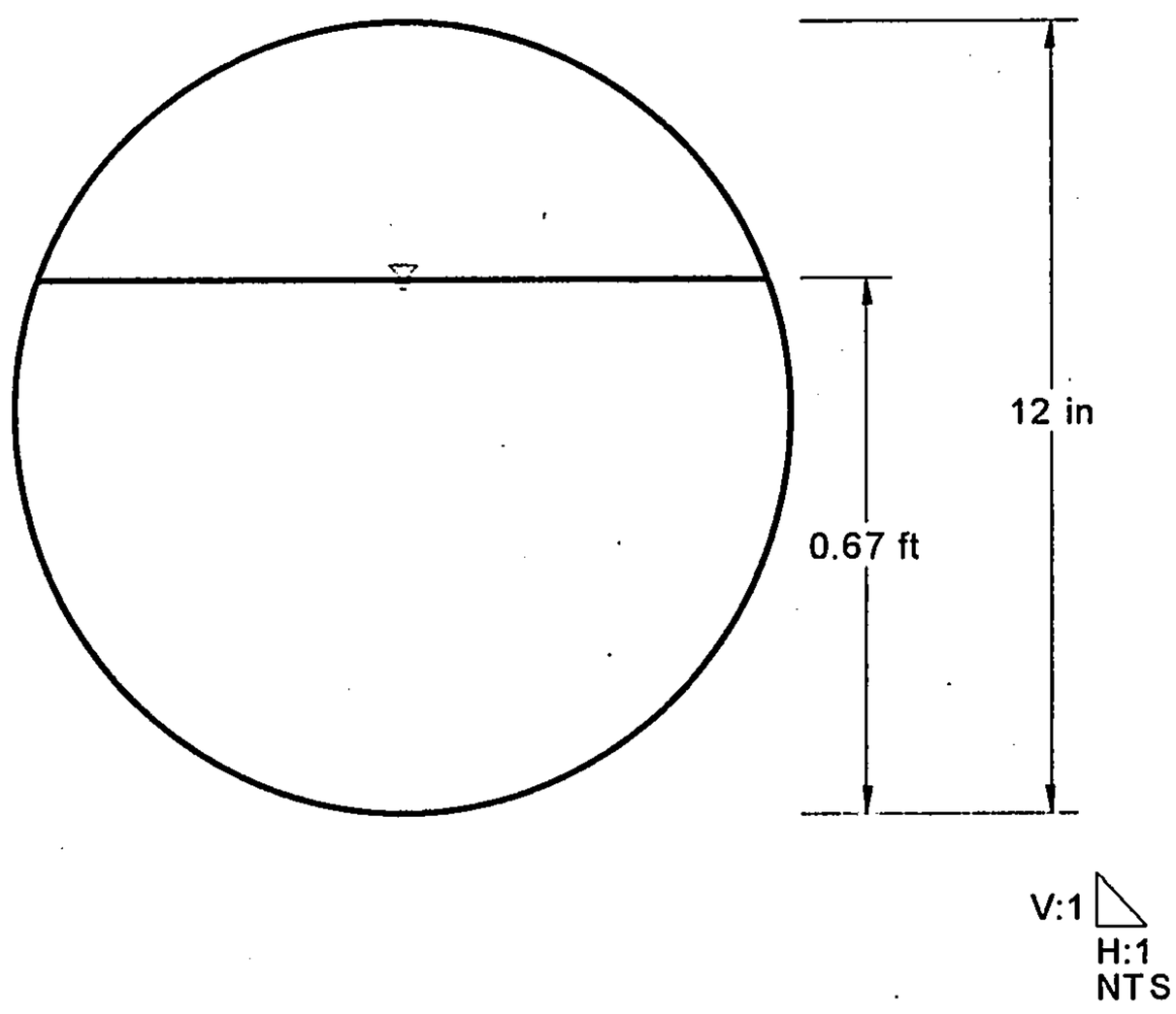

Cross Section
Cross Section for Circular Channel

Project Description	
Worksheet	A5-A7
Flow Element	Circular Channel
Method	Manning's Formula
Solve For	Channel Depth

Section Data		
Mannings Coefficient	0.013	
Slope	0.005000	ft/ft
Depth	1.66	ft
Diameter	24	in
Discharge	16.50	cfs

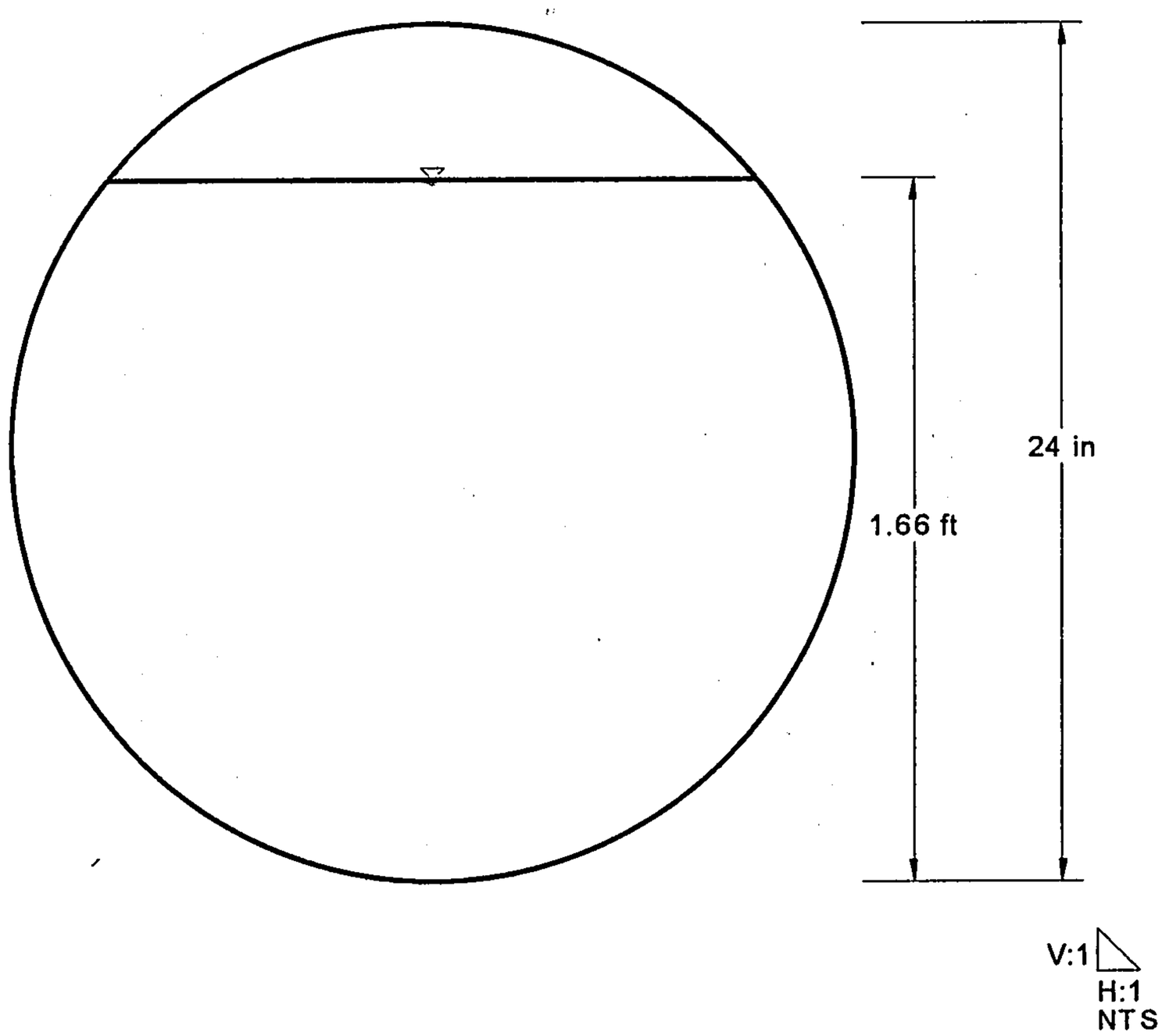

Cross Section
Cross Section for Circular Channel

Project Description	
Worksheet	A7-A11
Flow Element	Circular Channel
Method	Manning's Formula
Solve For	Channel Depth

Section Data		
Mannings Coefficient	0.013	
Slope	0.019000	ft/ft
Depth	1.20	ft
Diameter	21	in
Discharge	17.83	cfs

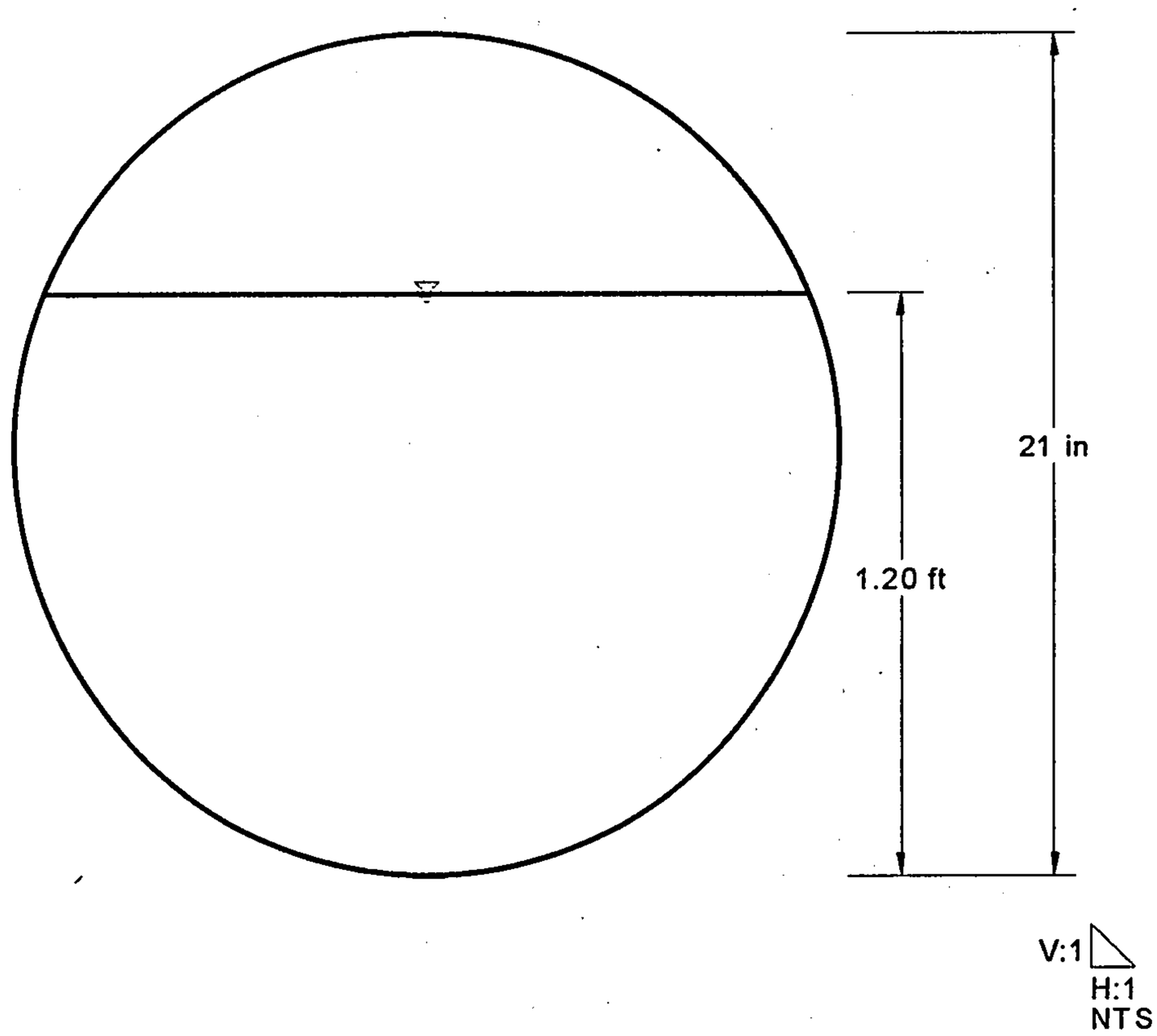

Cross Section
Cross Section for Circular Channel

Project Description	
Worksheet	A8-A9
Flow Element	Circular Channel
Method	Manning's Formula
Solve For	Channel Depth

Section Data		
Mannings Coefficient	0.013	
Slope	0.007000	ft/ft
Depth	0.90	ft
Diameter	15	in
Discharge	4.66	cfs

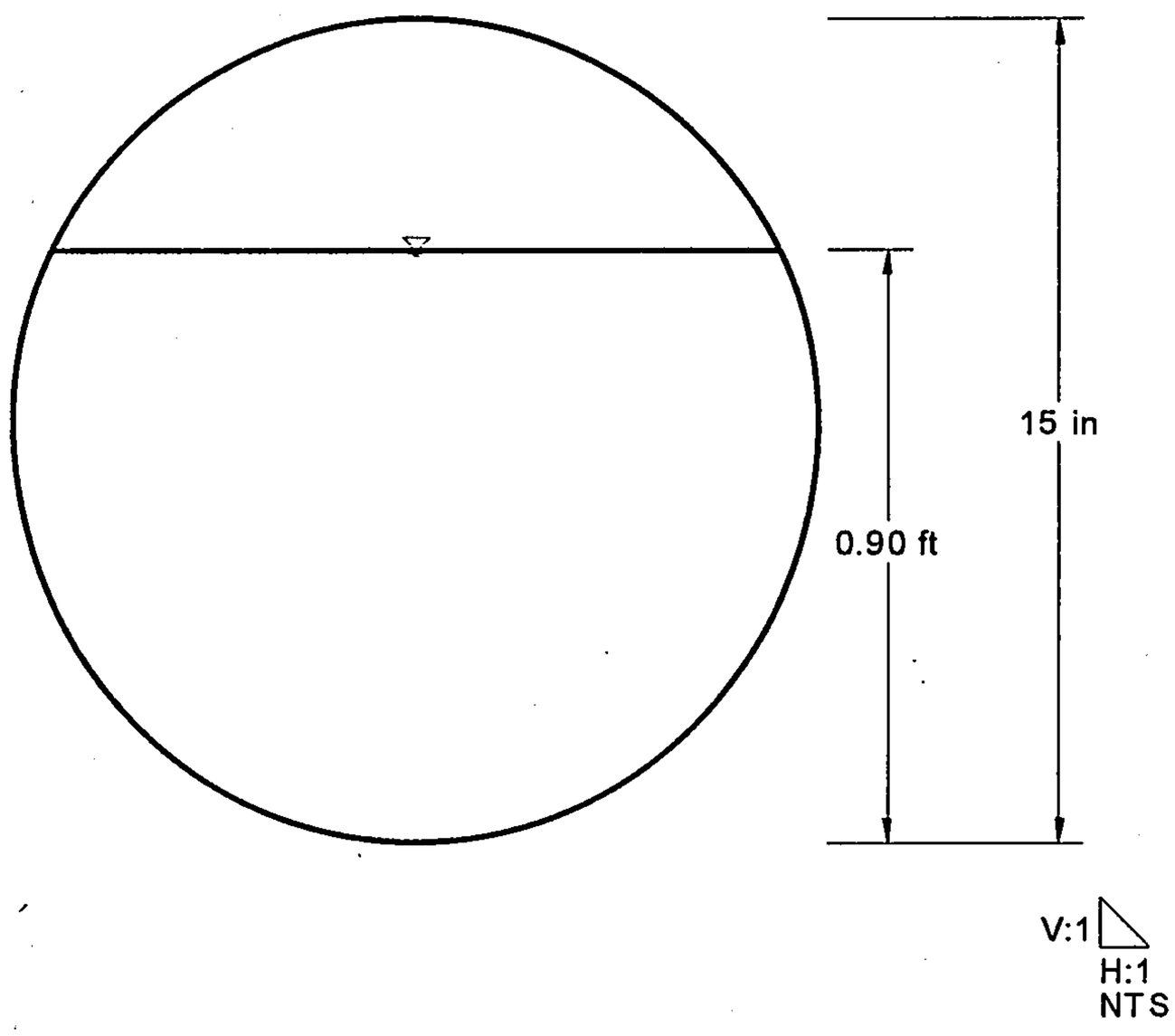

Cross Section
Cross Section for Circular Channel

Project Description	
Worksheet	A9-A10
Flow Element	Circular Channel
Method	Manning's Formula
Solve For	Channel Depth

Section Data		
Mannings Coefficient	0.013	
Slope	0.007000	ft/ft
Depth	0.99	ft
Diameter	18	in
Discharge	6.80	cfs

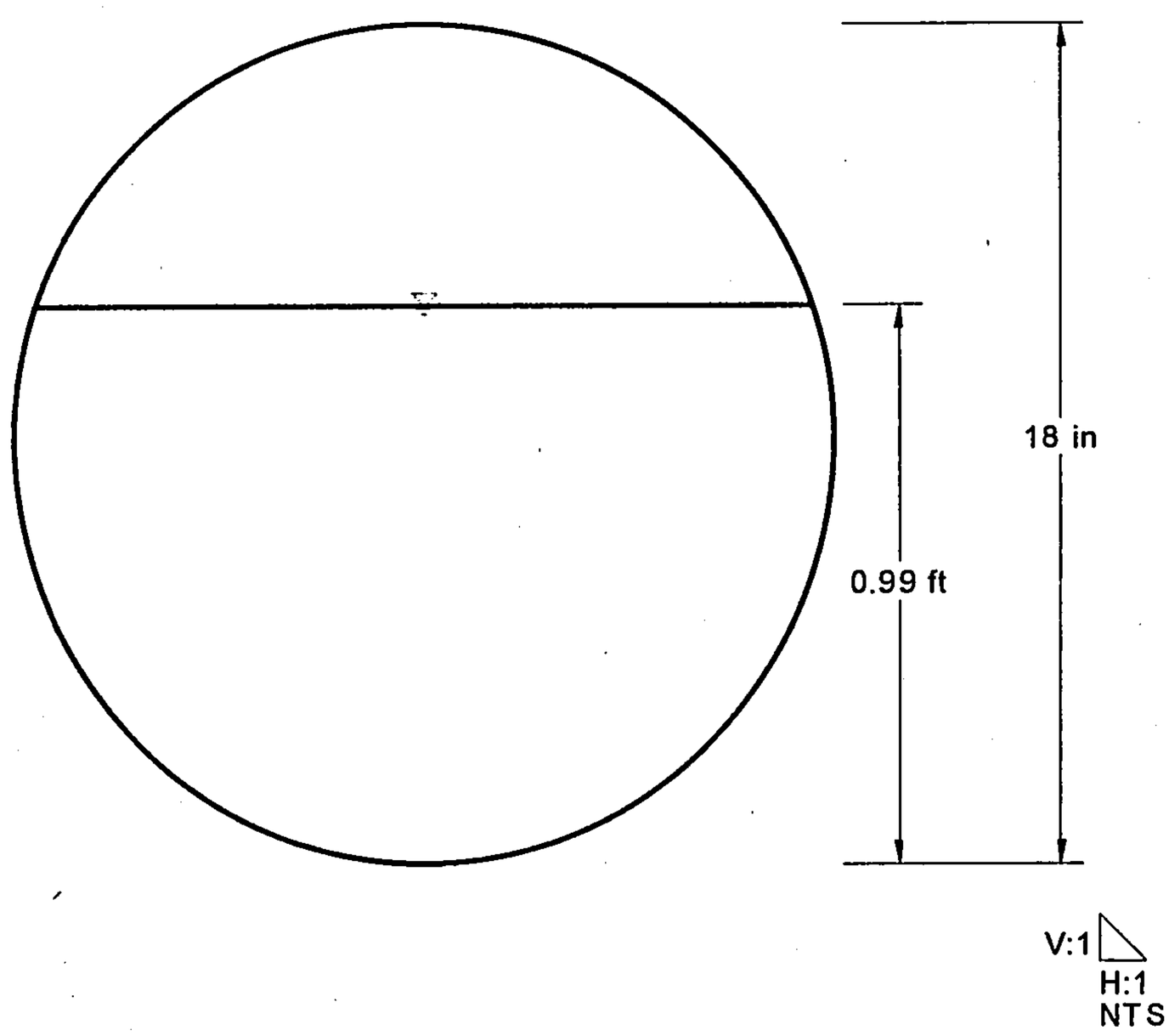

Cross Section
Cross Section for Circular Channel

Project Description	
Worksheet	A10-A11
Flow Element	Circular Channel
Method	Manning's Formula
Solve For	Channel Depth

Section Data		
Mannings Coefficient	0.013	
Slope	0.007000	ft/ft
Depth	1.24	ft
Diameter	18	in
Discharge	8.95	cfs

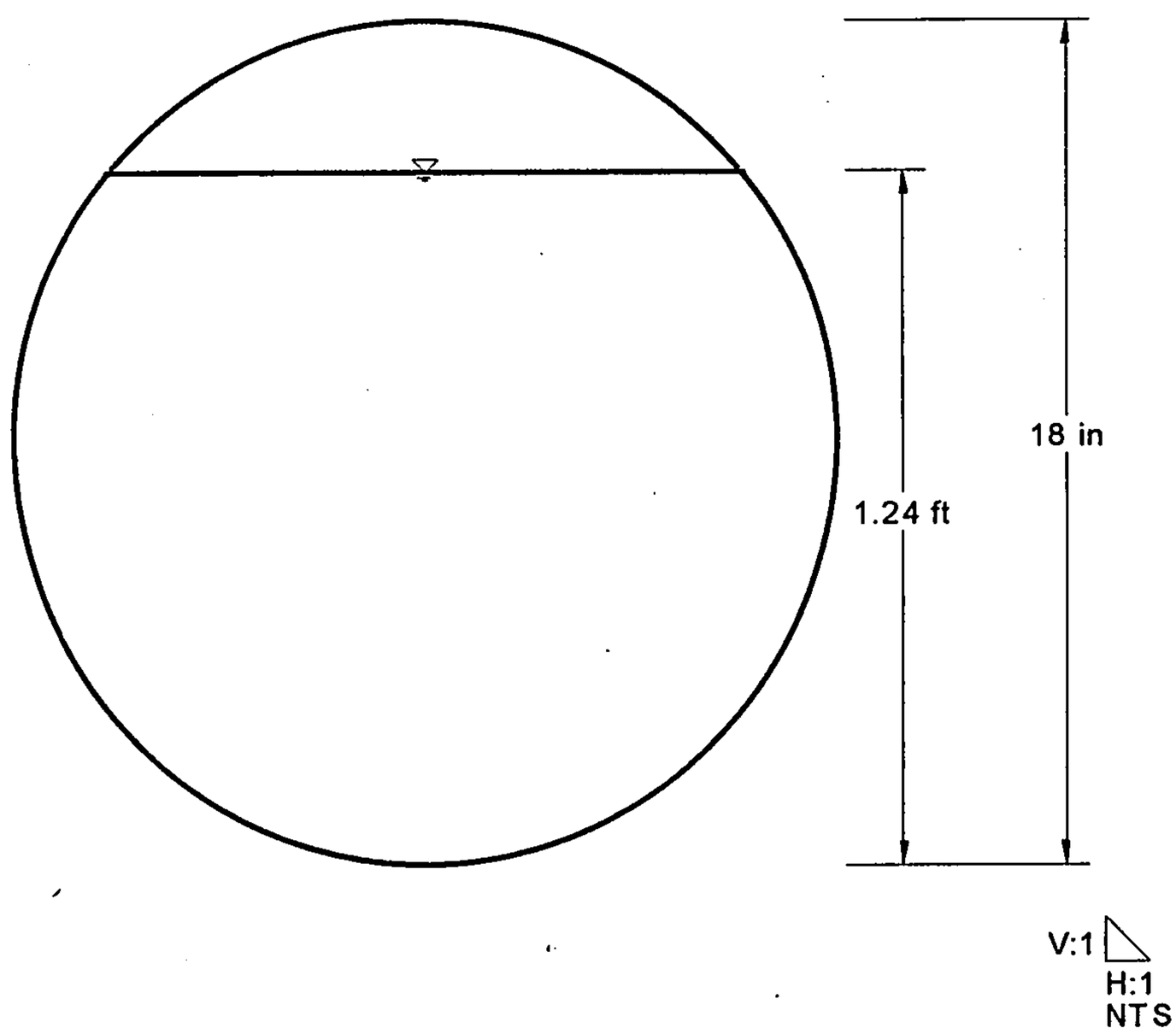

Cross Section
Cross Section for Circular Channel

Project Description	
Worksheet	B1-CP
Flow Element	Circular Channel
Method	Manning's Formula
Solve For	Channel Depth

Section Data		
Mannings Coefficient	0.013	
Slope	0.005000	ft/ft
Depth	0.79	ft
Diameter	12	in
Discharge	2.32	cfs

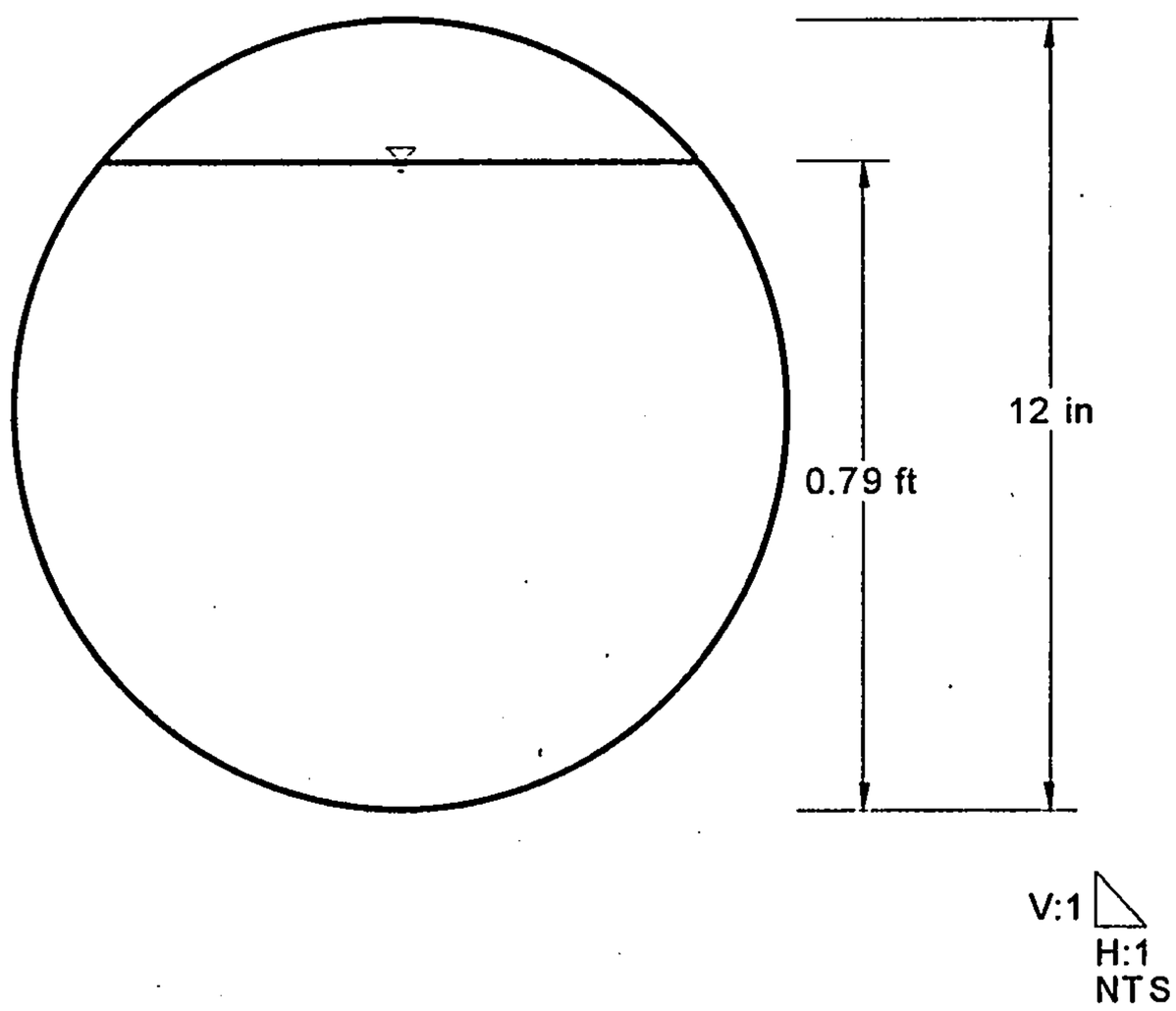

Cross Section
Cross Section for Circular Channel

Project Description	
Worksheet	B2-CP
Flow Element	Circular Channel
Method	Manning's Formula
Solve For	Channel Depth

Section Data		
Mannings Coefficient	0.013	
Slope	0.005000	ft/ft
Depth	0.39	ft
Diameter	6	in
Discharge	0.35	cfs

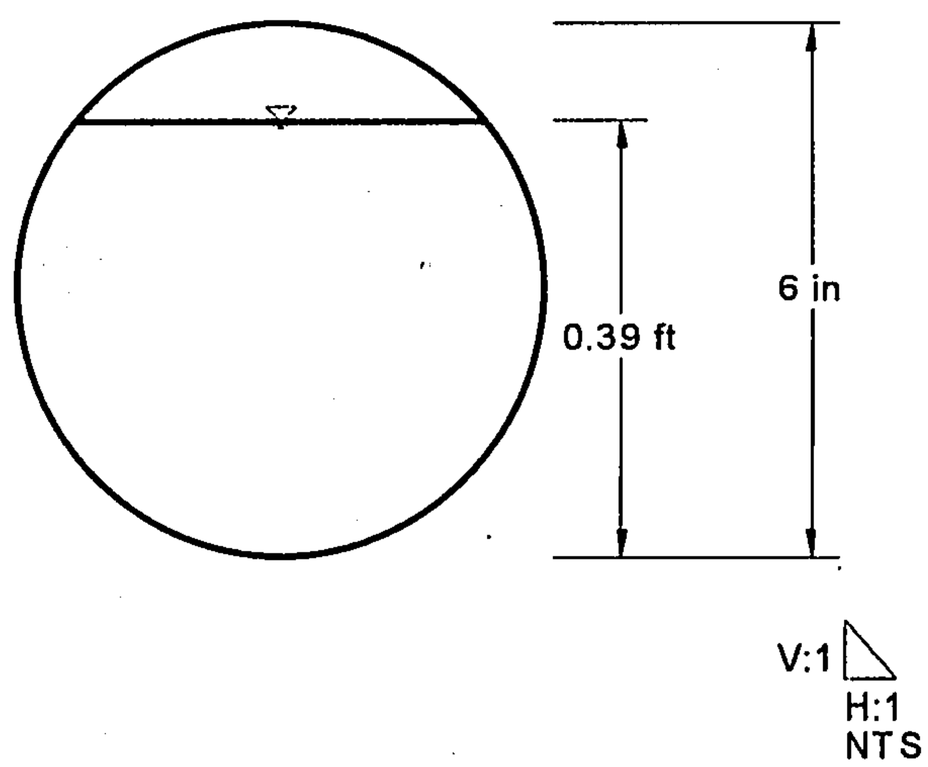

Cross Section
Cross Section for Circular Channel

Project Description	
Worksheet	CP-B3
Flow Element	Circular Channel
Method	Manning's Formula
Solve For	Channel Depth

Section Data		
Mannings Coefficient	0.013	
Slope	0.005000	ft/ft
Depth	0.84	ft
Diameter	12	in
Discharge	2.67	cfs

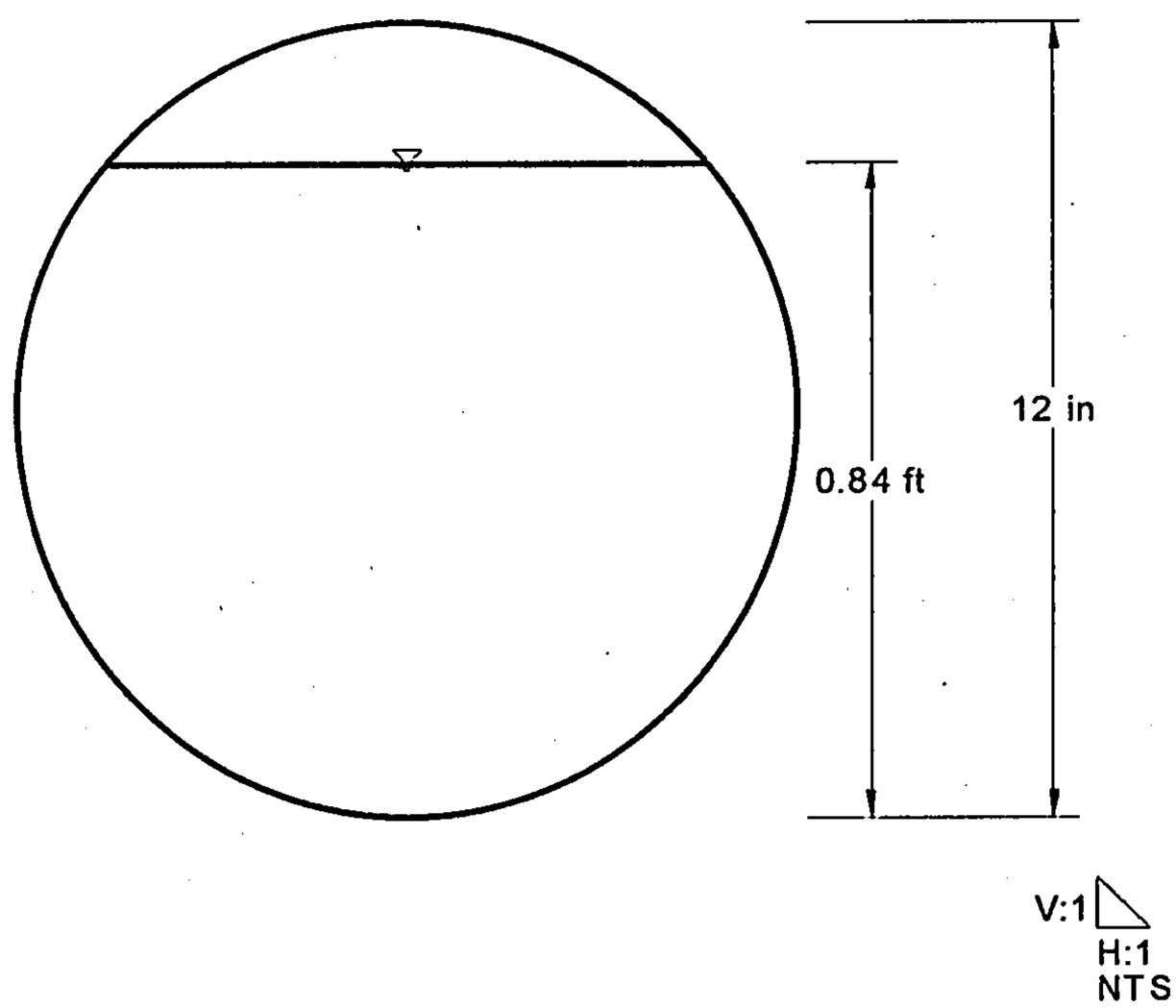

Cross Section
Cross Section for Circular Channel

Project Description	
Worksheet	B4-B3
Flow Element	Circular Channel
Method	Manning's Formula
Solve For	Channel Depth

Section Data		
Mannings Coefficient	0.013	
Slope	0.005000	ft/ft
Depth	1.03	ft
Diameter	15	in
Discharge	4.68	cfs

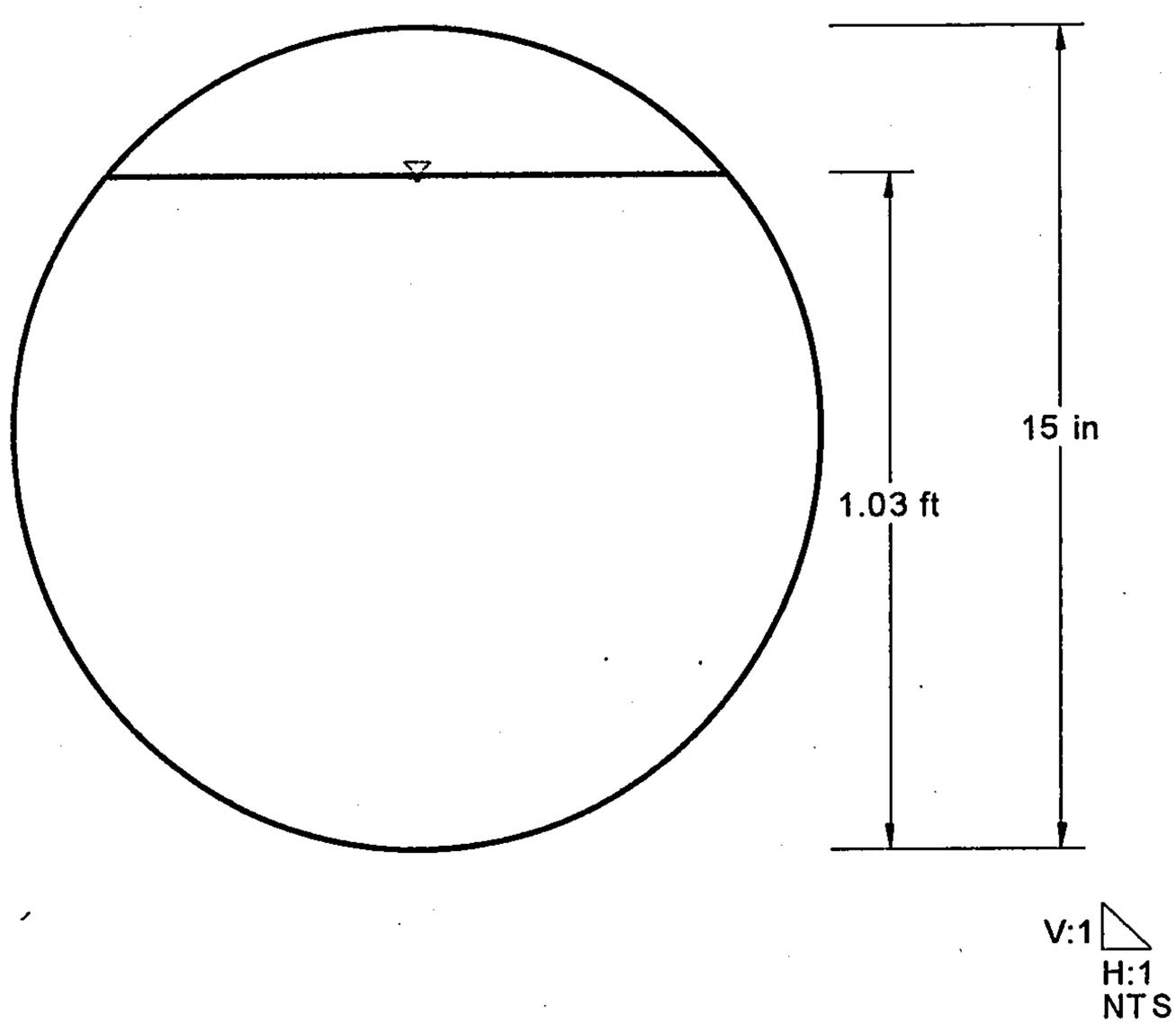

Cross Section
Cross Section for Circular Channel

Project Description	
Worksheet	B3-B6
Flow Element	Circular Channel
Method	Manning's Formula
Solve For	Channel Depth

Section Data		
Mannings Coefficient	0.013	
Slope	0.005000	ft/ft
Depth	1.02	ft
Diameter	18	in
Discharge	5.96	cfs

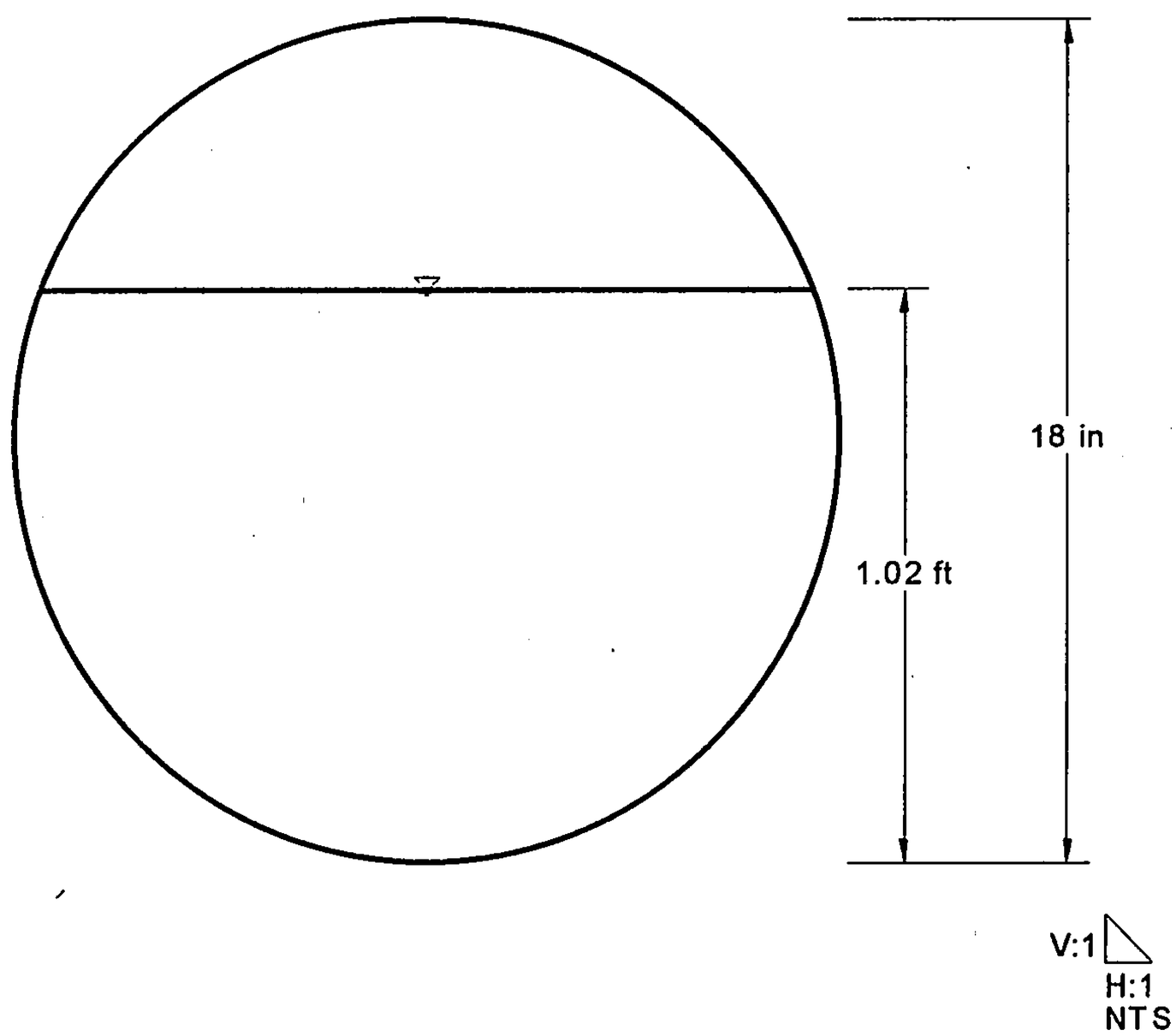

Cross Section
Cross Section for Circular Channel

Project Description	
Worksheet	B5-B6
Flow Element	Circular Channel
Method	Manning's Formula
Solve For	Channel Depth

Section Data		
Mannings Coefficient	0.013	
Slope	0.005000	ft/ft
Depth	1.04	ft
Diameter	15	in
Discharge	4.80	cfs

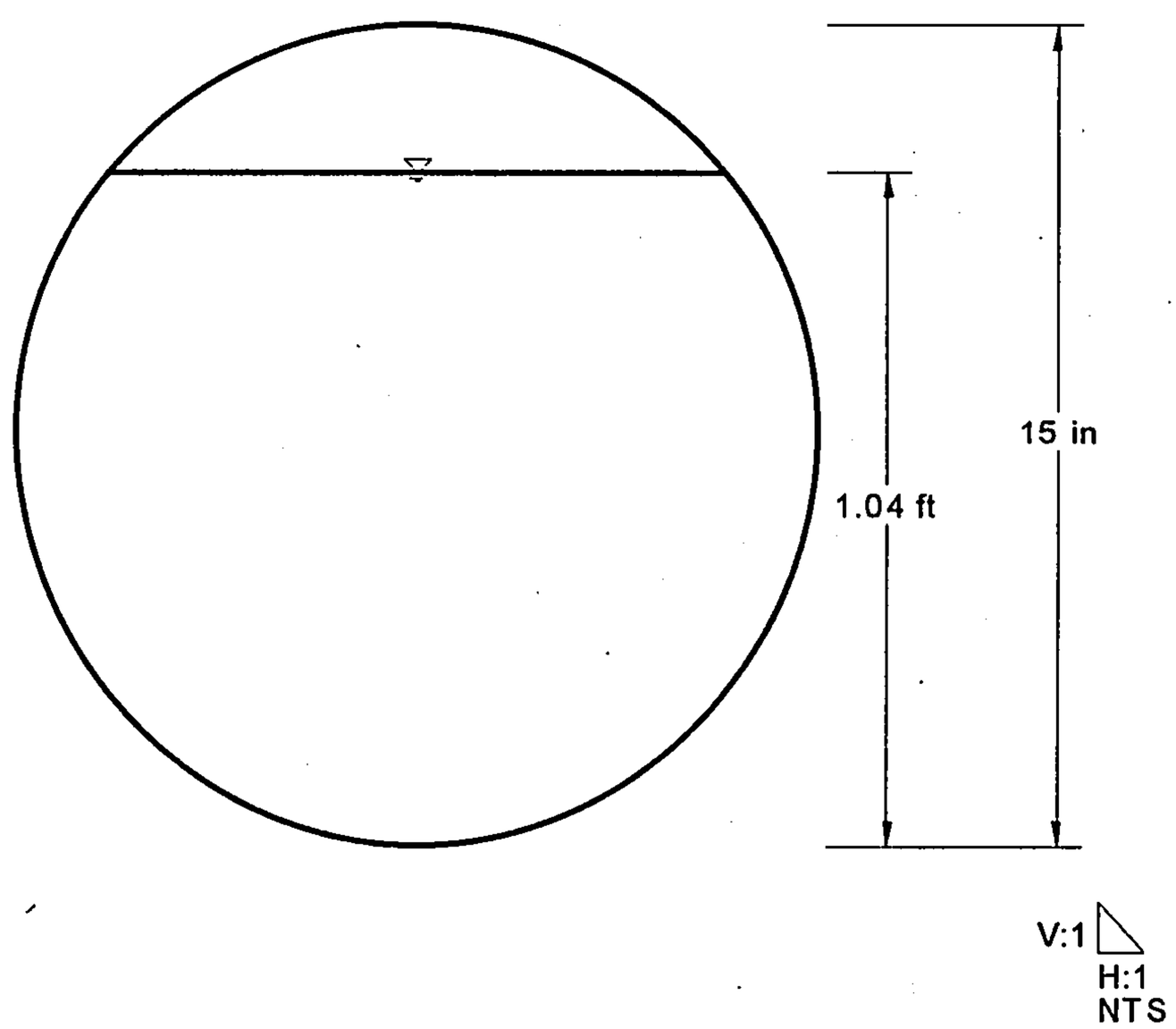

Cross Section
Cross Section for Circular Channel

Project Description	
Worksheet	B6-B7
Flow Element	Circular Channel
Method	Manning's Formula
Solve For	Channel Depth

Section Data		
Mannings Coefficient	0.013	
Slope	0.005000	ft/ft
Depth	1.30	ft
Diameter	24	in
Discharge	12.09	cfs

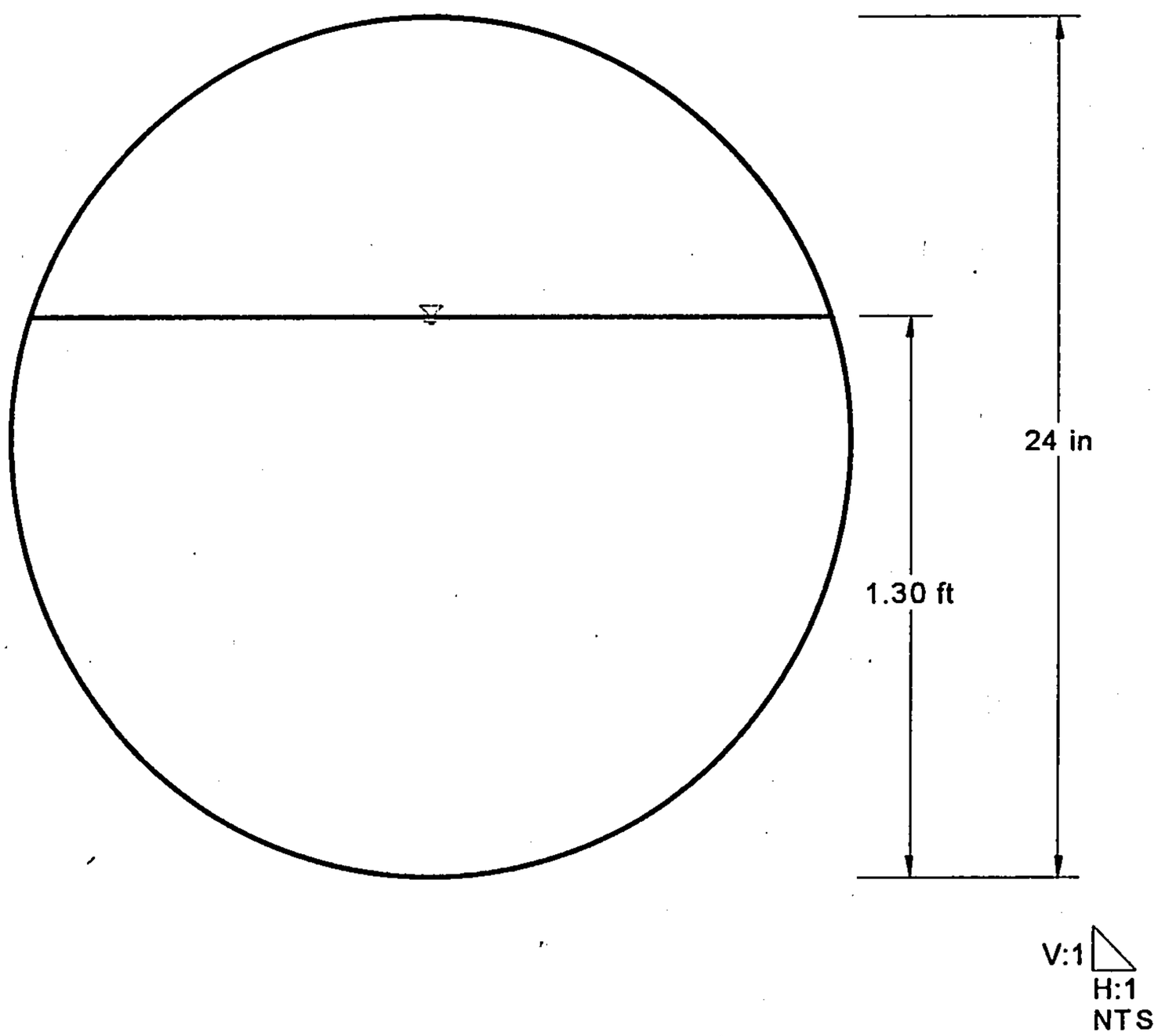

Cross Section
Cross Section for Circular Channel

Project Description	
Worksheet	B7-B8
Flow Element	Circular Channel
Method	Manning's Formula
Solve For	Channel Depth

Section Data		
Mannings Coefficient	0.013	
Slope	0.005000	ft/ft
Depth	1.37	ft
Diameter	24	in
Discharge	13.06	cfs

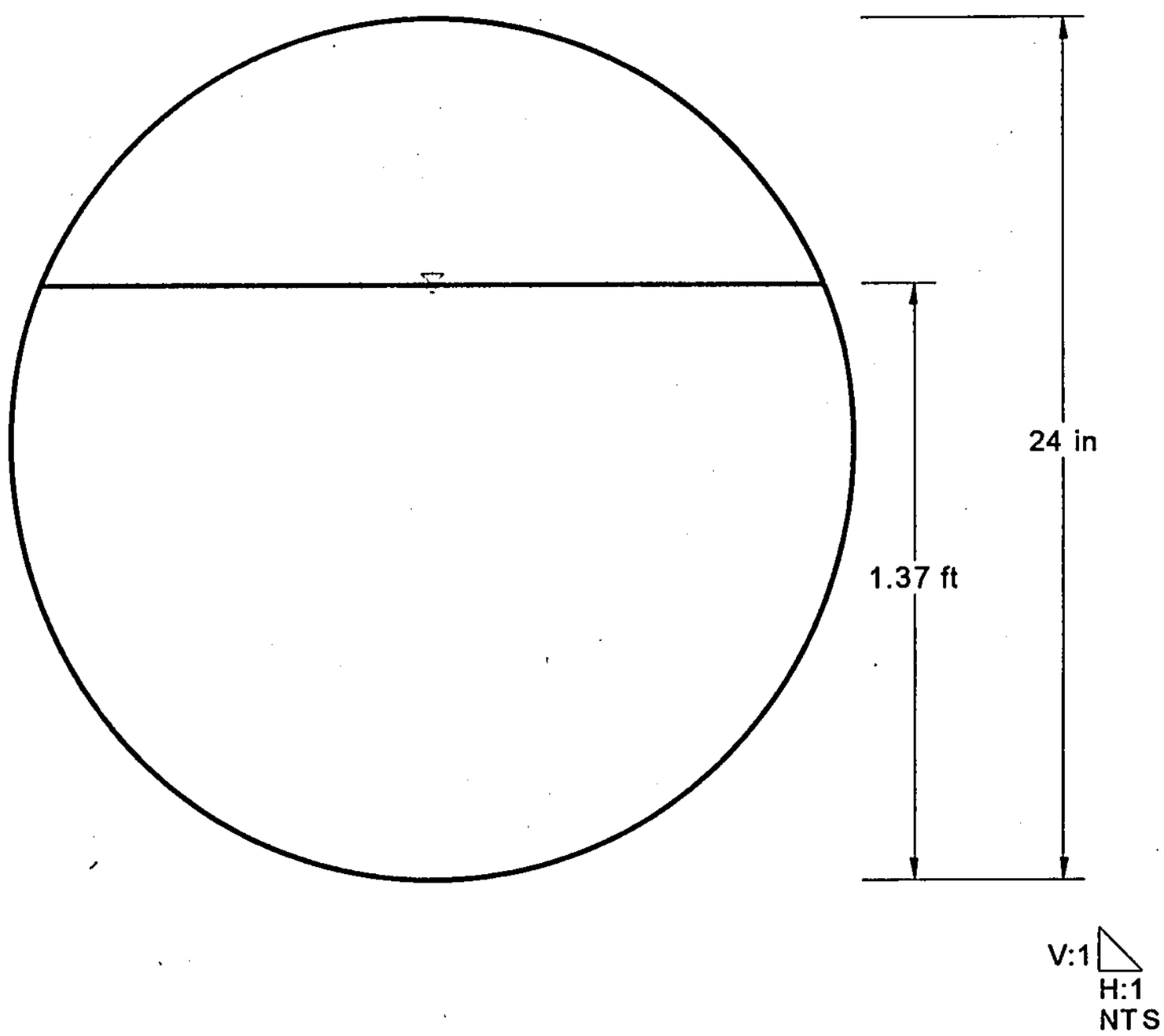

Cross Section
Cross Section for Circular Channel

Project Description	
Worksheet	B12-B8
Flow Element	Circular Channel
Method	Manning's Formula
Solve For	Channel Depth

Section Data		
Mannings Coefficient	0.013	
Slope	0.005000	ft/ft
Depth	0.64	ft
Diameter	12	in
Discharge	1.85	cfs

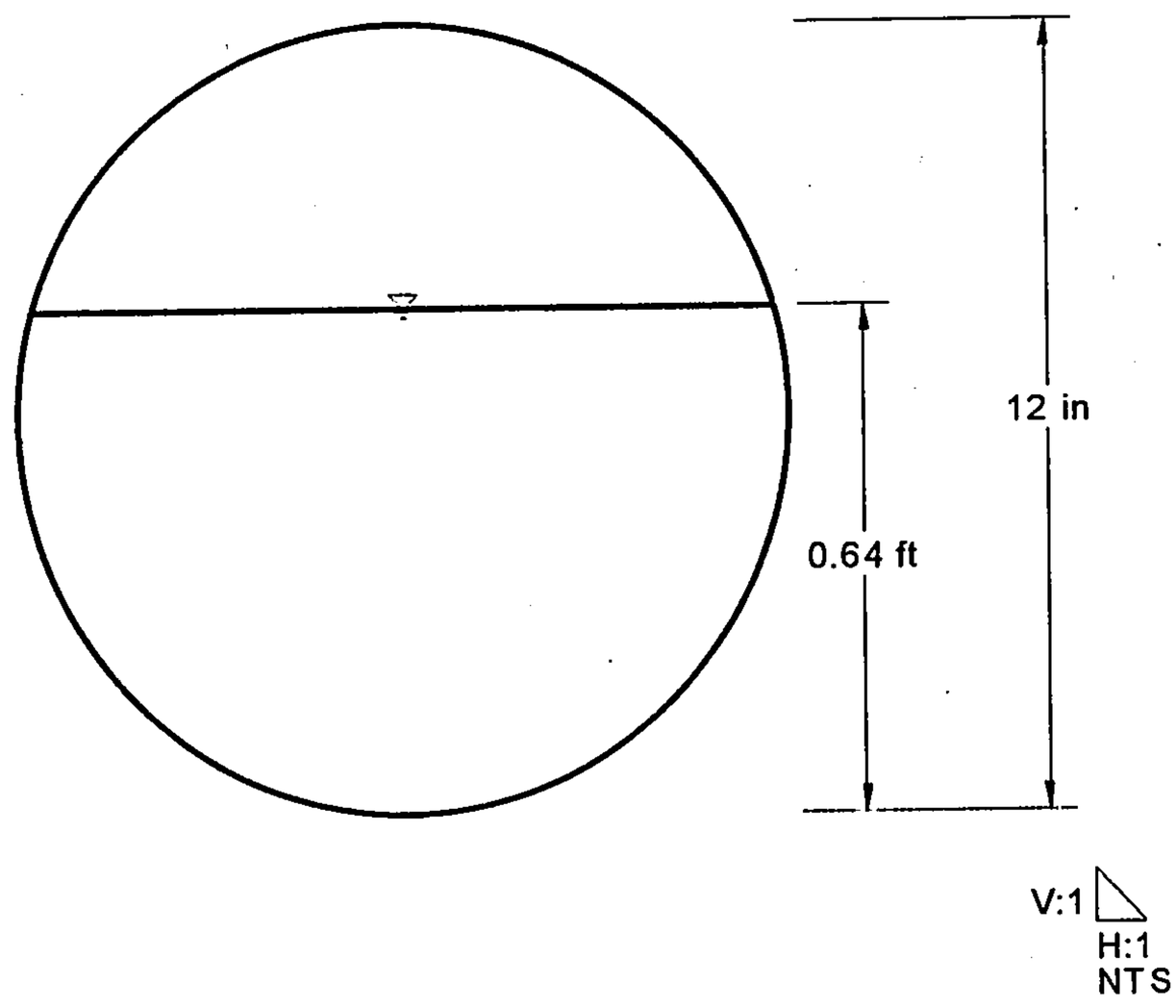

c:\haestad\fmw\kmrtcrs&cntrl.fm2
03/16/01 01:10:40 PM © Haestad Methods, Inc. 37 Brookside Road Waterbury, CT 06708 USA (203) 755-1666
Great Basin Engineering - South

Cross Section
Cross Section for Circular Channel

Project Description	
Worksheet	B8-B9
Flow Element	Circular Channel
Method	Manning's Formula
Solve For	Channel Depth

Section Data		
Mannings Coefficient	0.013	
Slope	0.010000	ft/ft
Depth	1.45	ft
Diameter	21	in
Discharge	16.39	cfs

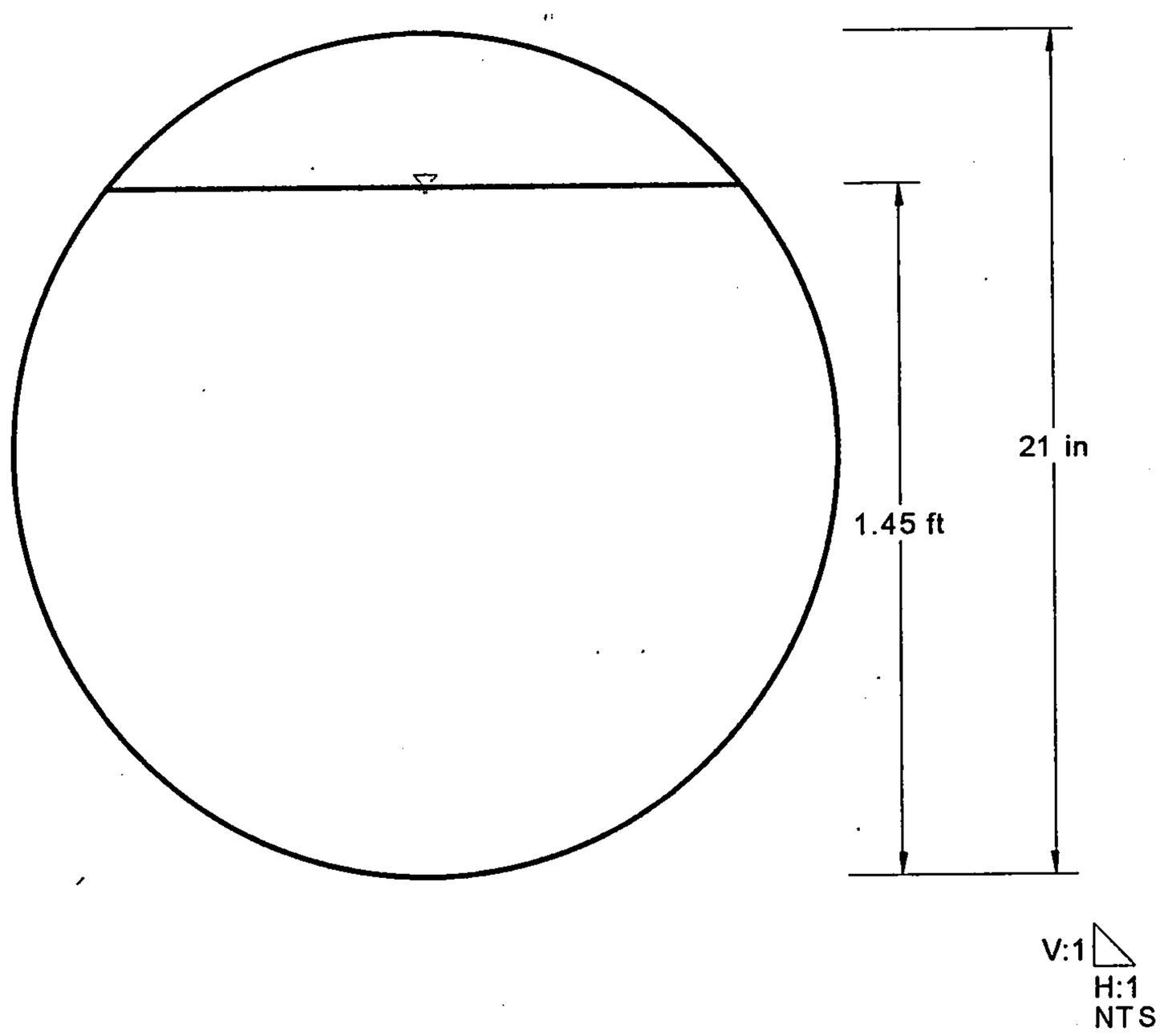

Cross Section
Cross Section for Circular Channel

Project Description	
Worksheet	B13-B9
Flow Element	Circular Channel
Method	Manning's Formula
Solve For	Channel Depth

Section Data	
Mannings Coefficient	0.013
Slope	0.005000 ft/ft
Depth	0.34 ft
Diameter	10 in
Discharge	0.55 cfs

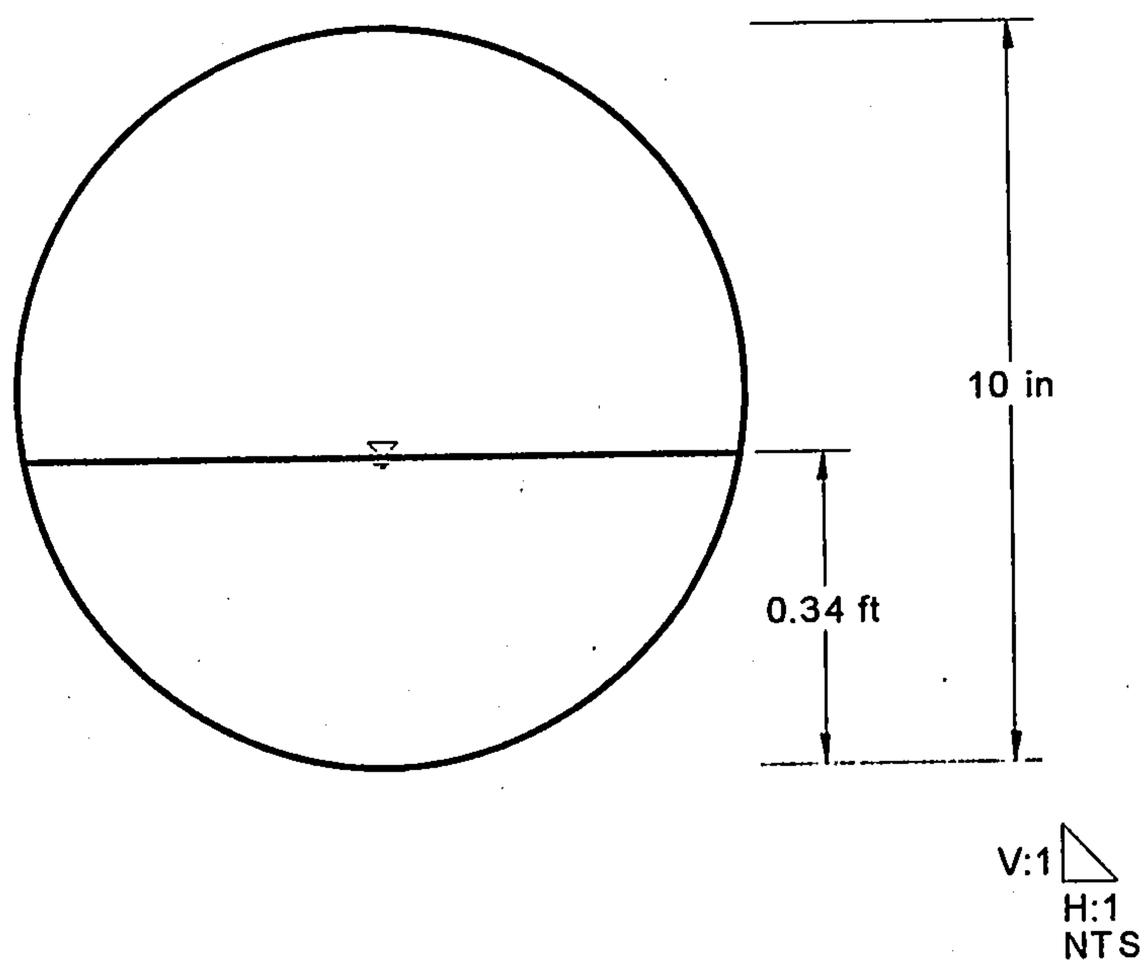

c:\haestad\fmw\kmrtcrs&cntrl.fm2
03/16/01 11:59:41 AM © Haestad Methods, Inc. 37 Brookside Road Waterbury, CT 06708 USA (203) 755-1666
Great Basin Engineering - South

Cross Section
Cross Section for Circular Channel

Project Description	
Worksheet	B11-B9
Flow Element	Circular Channel
Method	Manning's Formula
Solve For	Channel Depth

Section Data		
Mannings Coefficient	0.013	
Slope	0.005000	ft/ft
Depth	0.72	ft
Diameter	15	in
Discharge	2.91	cfs

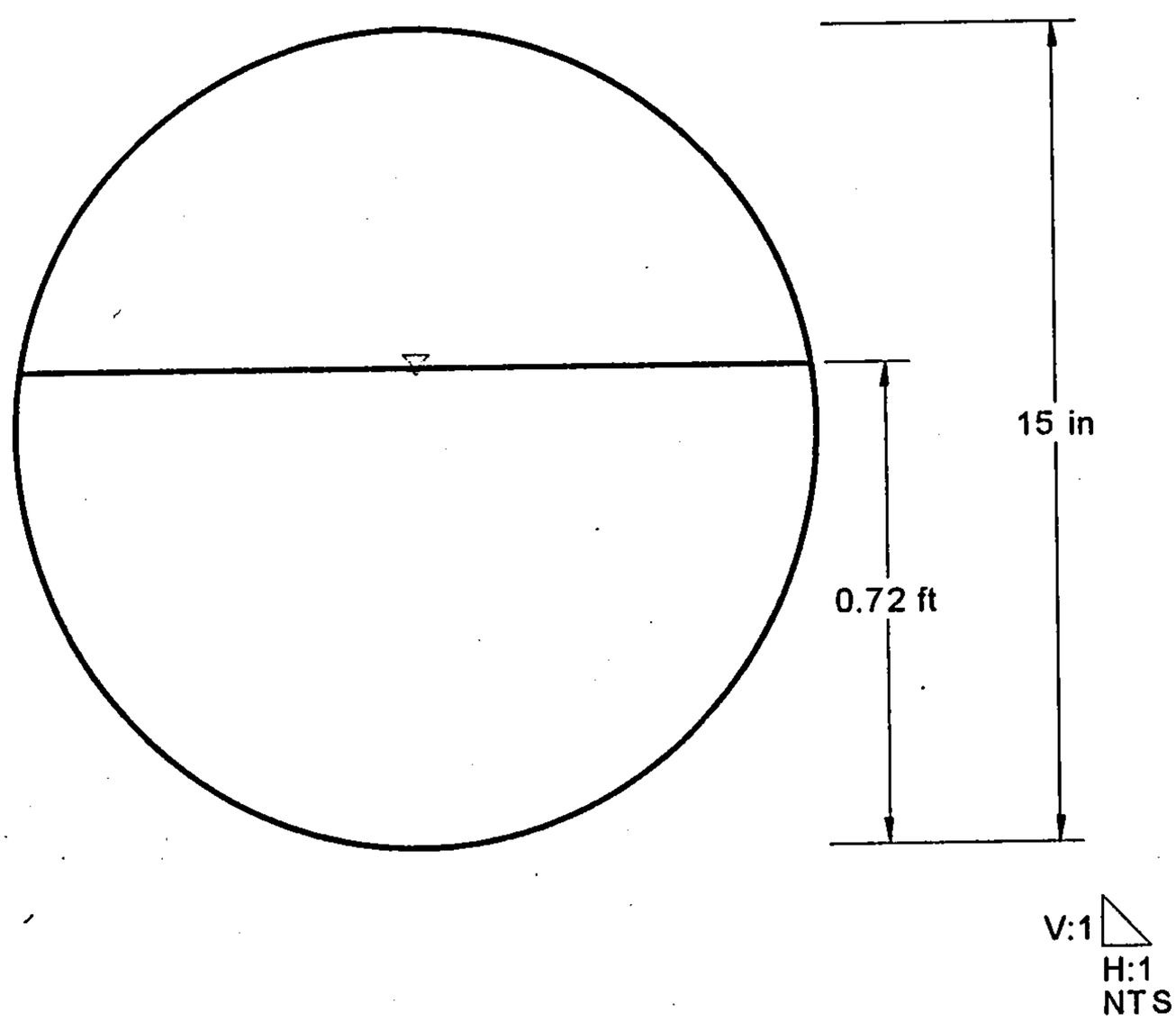

Cross Section
Cross Section for Circular Channel

Project Description	
Worksheet	B10-B9
Flow Element	Circular Channel
Method	Manning's Formula
Solve For	Channel Depth

Section Data		
Mannings Coefficient	0.013	
Slope	0.005000	ft/ft
Depth	0.70	ft
Diameter	10	in
Discharge	1.64	cfs

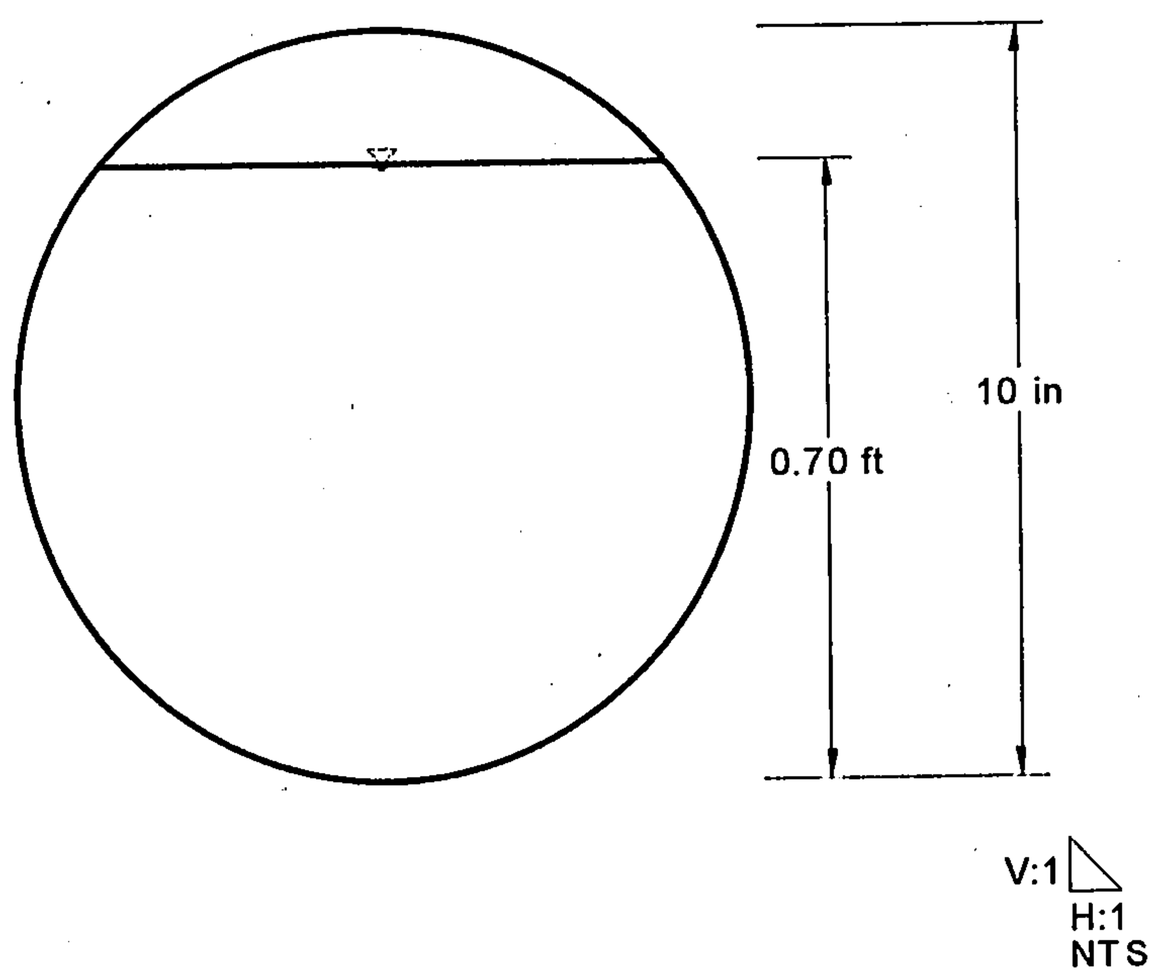

© Haestad Methods, Inc.

Great Basin Engineering - South
37 Brookside Road Waterbury, CT 06708 USA (203) 755-1666

Cross Section
Cross Section for Circular Channel

Project Description	
Worksheet	Isabell Street
Flow Element	Circular Channel
Method	Manning's Formula
Solve For	Channel Depth

Section Data		
Mannings Coefficient	0.013	
Slope	0.010000	ft/ft
Depth	1.37	ft
Diameter	24	in
Discharge	18.33	cfs

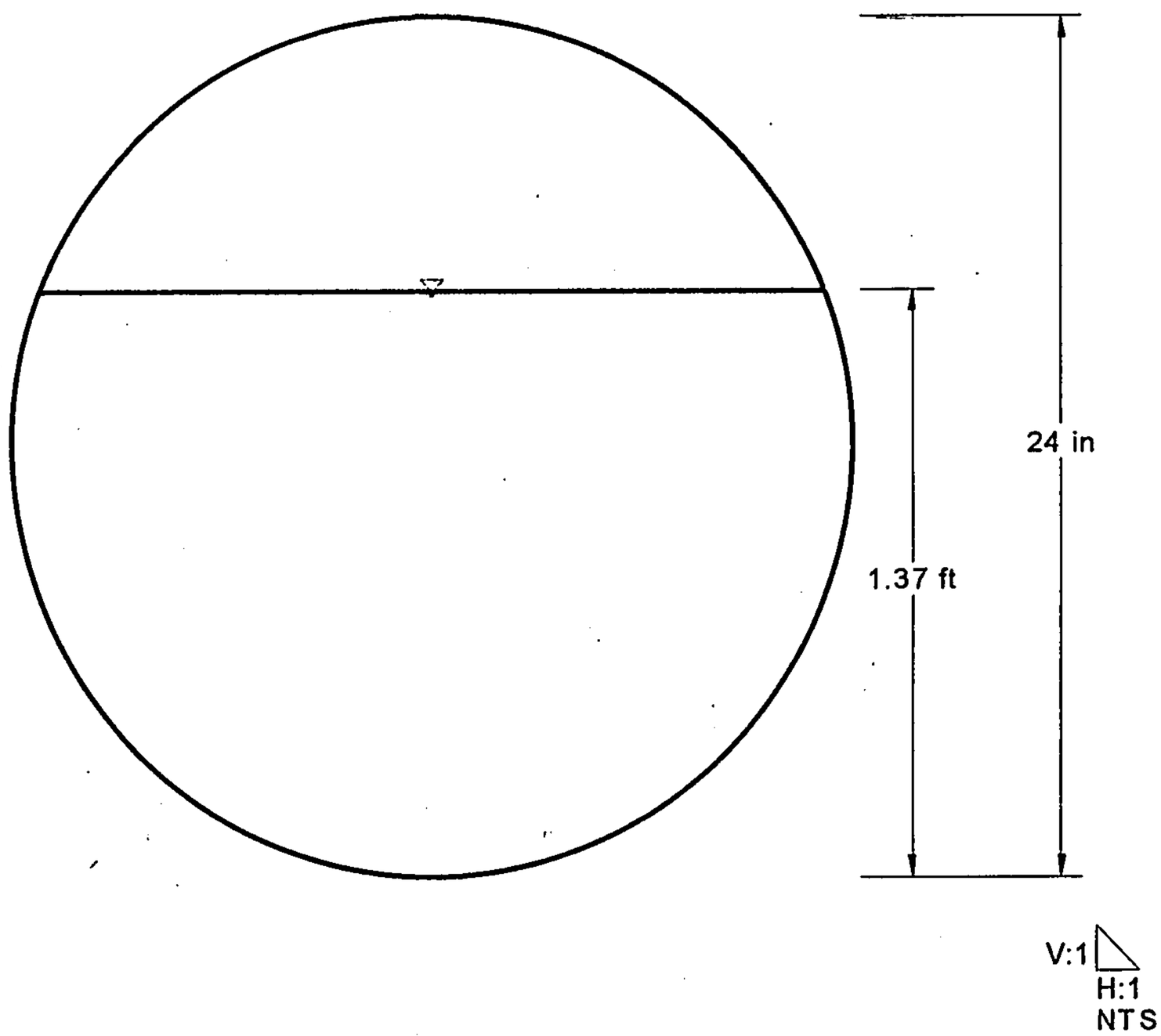

Area - 15,850 c.f. Pond
R9-R13 and overflow for 5,000 c.f Pond.

- This calculation uses the same hydrograph as that which was previously completed for basin E.
The volume calculation is for the portion of the graph between the reduced inflow and the allowable release rate

Q_p Entire Basin 39.0 cfs

Q_p (reduced Inflow) = (2.48)(4.37) + (0.7)(2.03) + 21.25 = 33.51

t_B (Entire Basin) = 0.72 ⇒ 43.2 min

t_p (Entire Basin) ⇒ 12 min

E = 1.76"

Duration of Peak = 0.21 ⇒ 12.6 min

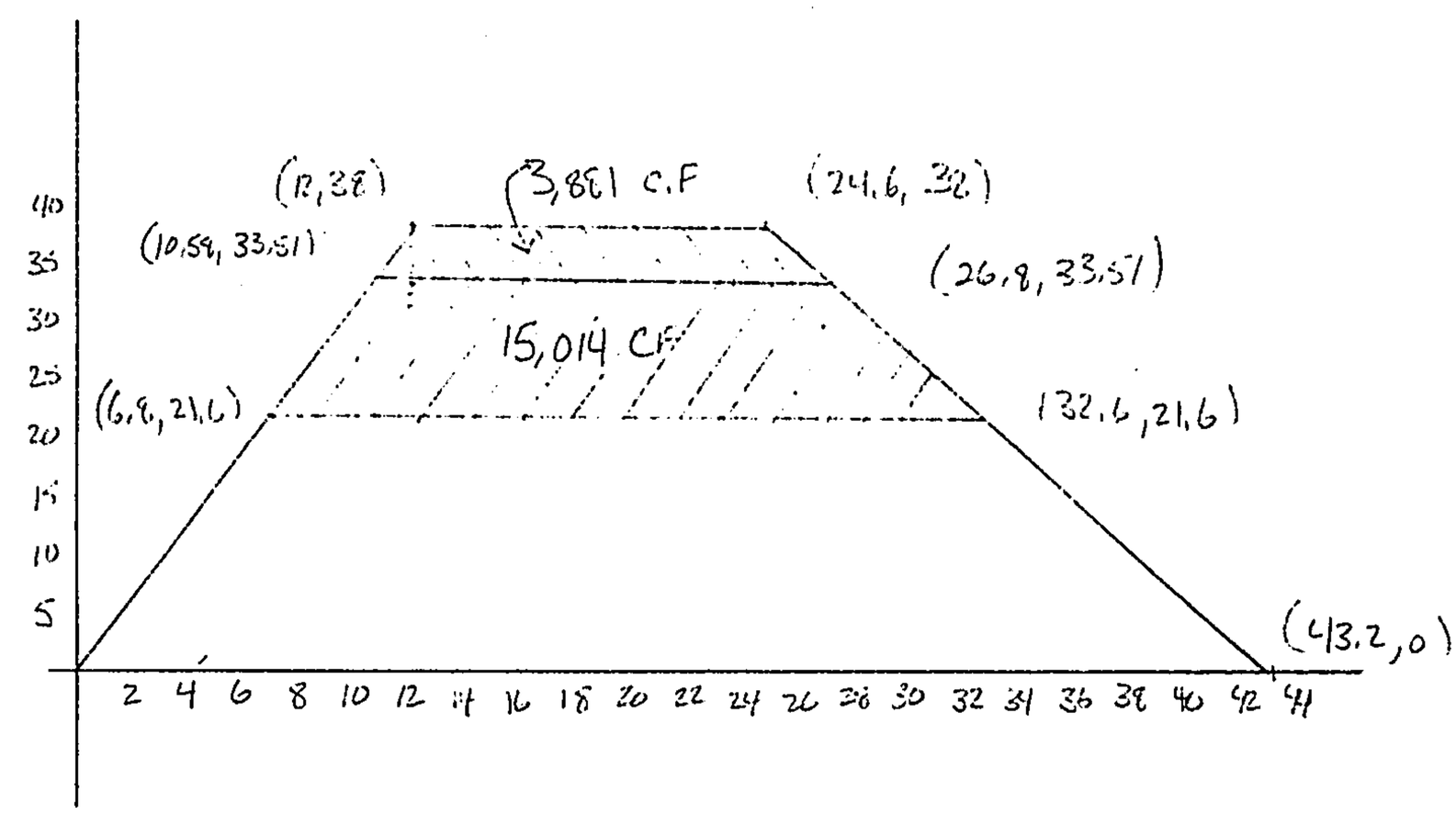

Orifice Design $Q = C_d \times \sqrt{2G \cdot H} \times A$

5,000 c.f Pond
H = 85.7 - 80.58 = 5.12'
C_d = 0.62
Q = 21.25

D = 1.55' = 18.6" Ø

15,885 c.f Pond
H = 83 - 77.81 = 5.16'
C_d = 0.62
Q = 21.6

D = 1.56' ⇒ 18.6"

Orifice 43,684 C.F. Pond

$Q = C_d \sqrt{2 \cdot G \cdot H} \cdot A$

$H = 88 - 82.63 = 5.37$

$C_d = 0.62$

$Q = 11 \, cfs$

$D = 1.1' \Rightarrow 13.2''$

National® Brand
13-722 500 SHEETS, FILLER 5 SQUARE
42-381 50 SHEETS EYE-EASE® 5 SQUARE
42-382 100 SHEETS EYE-EASE® 5 SQUARE
42-389 200 SHEETS EYE-EASE® 5 SQUARE
42-392 100 RECYCLED WHITE 5 SQUARE
42-399 200 RECYCLED WHITE 5 SQUARE
Made in U.S.A.

Area B1- B8 Route through 5,000 c.f pond

Area 256,577 "D" (5.89 Ac) A_T = 6.14 Ac.
10,757 "B" (0.25 Ac)

$Q_p = (5.89)(4.37) + (2.03)(0.25) = 26.25$ cfs

$t_B = \left(2.107 * E_V \frac{A_T}{Q_p}\right) - \left(0.25 * \frac{A_D}{A_T}\right) = 0.72$ hr = 42.4 min

$t_p = (0.7 * 0.2) + \left(1.6 - \frac{A_D}{A_T}\right) / 12 = 0.19$ = 11.6 min

$E = [(5.89)(1.97) + (0.25)(0.03)] / 6.14 = 1.92'$

Duration of Peak = $0.25 * \frac{A_D}{A_T}$ = 0.24 hr = 14.4 min

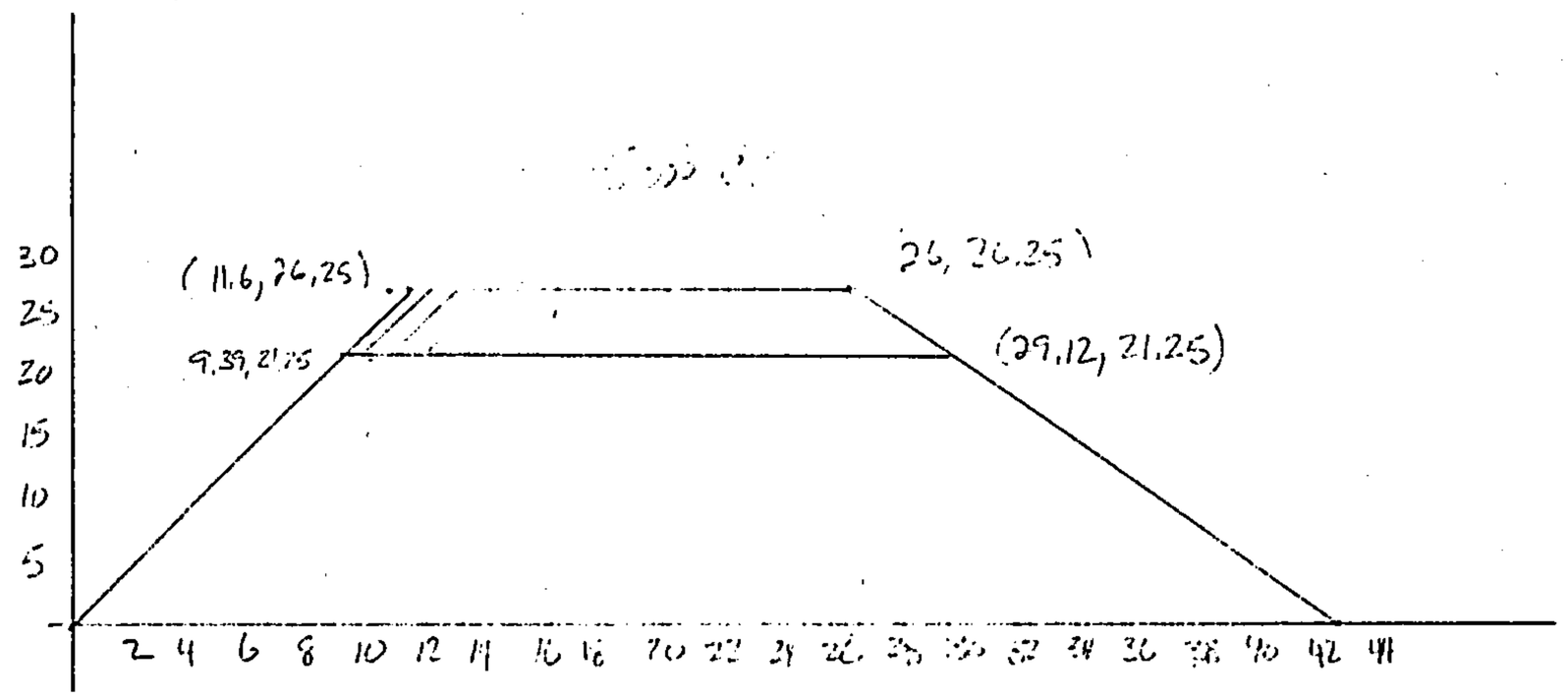

Orifice $Q = C_d \sqrt{2 \cdot G H} * A$

H = 86 - 80.38 = 5.63
C_d = 0.62
Q = 21.25

Diam = 1.51'

Q_p 10-year

B=	0.76
D=	2.89

For Sub-Basins A1-A10 Treatment D=95% and Treatment B=5%, A11 D=5% B=95%

A1

	SF	Acre	
A_T=	28640		
A_B=	1432	0.03	5%
A_D=	27208	0.62	95%
Q_p=	1.83 cfs		

A2

	SF	Acre	
A_T=	23648		
A_B=	1182.4	0.03	5%
A_D=	22465.6	0.52	95%
Q_p=	1.51 cfs		

A3

	SF	Acre	
A_T=	92173		
A_B=	4608.65	0.11	5%
A_D=	87564.35	2.01	95%
Q_p=	5.89 cfs		

A4

	SF	Acre	
A_T=	35731		
A_B=	1786.55	0.04	5%
A_D=	33944.45	0.78	95%
Q_p=	2.28 cfs		

A5

	SF	Acre	
A_T=	35851		
A_B=	1792.55	0.04	5%
A_D=	34058.45	0.78	95%
Q_p=	2.29 cfs		

A6

	SF	Acre	
A_T=	42278		
A_B=	2113.9	0.05	5%
A_D=	40164.1	0.92	95%
Q_p=	2.70 cfs		

A7

	SF	Acre	
A_T=	20875		
A_B=	1043.75	0.02	5%
A_D=	19831.25	0.46	95%
Q_p=	1.33 cfs		

A8

	SF	Acre	
A_T=	72932		
A_B=	3646.6	0.08	5%
A_D=	69285.4	1.59	95%
Q_p=	4.66 cfs		

A9

	SF	Acre	
A_T=	33477		
A_B=	1673.85	0.04	5%
A_D=	31803.15	0.73	95%
Q_p=	2.14 cfs		

A10

	SF	Acre	
A_T=	33656		
A_B=	1682.8	0.04	5%
A_D=	31973.2	0.73	95%
Q_p=	2.15 cfs		

A11

	SF	Acre	
A_T=	23825		
A_B=	22633.75	0.52	95%
A_D=	1191.25	0.03	5%
Q_p=	0.47 cfs		

B1

	SF	Acre	
A_T=	34963		
A_B=	0	0.00	0%
A_D=	34963	0.80	100%
Q_p=	2.32 cfs		

B2

	SF	Acre	
A_T=	5258		
A_B=	0	0.00	0%
A_D=	5258	0.12	100%
Q_p=	0.35 cfs		

B3

	SF	Acre	
A_T=	21650		
A_B=	3247.5	0.07	15%
A_D=	18402.5	0.42	85%
Q_p=	1.28 cfs		

B4

	SF	Acre	
A_T=	70609		
A_B=	0	0.00	0%
A_D=	70609	1.62	100%
Q_p=	4.68 cfs		

B5

	SF	Acre	
A_T=	72288		
A_B=	0	0.00	0%
A_D=	72288	1.66	100%
Q_p=	4.80 cfs		

B6

	SF	Acre	
A_T=	21660		
A_B=	2166	0.05	10%
A_D=	19494	0.45	90%
Q_p=	1.33 cfs		

B7

	SF	Acre	
A_T=	15848		
A_B=	1584.8	0.04	10%
A_D=	14263.2	0.33	90%
Q_p=	0.97 cfs		

B8

	SF	Acre	
A_T=	25058		
A_B=	3758.7	0.09	15%
A_D=	21299.3	0.49	85%
Q_p=	1.48 cfs		

B9

	SF	Acre	
A_T=	11220		
A_B=	0	0.00	0%
A_D=	11220	0.26	100%
Q_p=	0.74 cfs		

B10

	SF	Acre	
A_T=	27801		
A_B=	4170.15	0.10	15%
A_D=	23630.85	0.54	85%
Q_p=	1.64 cfs		

B11

	SF	Acre	
A_T=	56398		
A_B=	16919.4	0.39	30%
A_D=	39478.6	0.91	70%
Q_p=	2.91 cfs		

B12

	SF	Acre	
A_T=	31391		
A_B=	4708.65	0.11	15%
A_D=	26682.35	0.61	85%
Q_p=	1.85 cfs		

B13

	SF	Acre	
A_T=	11673		
A_B=	4669.2	0.11	40%
A_D=	7003.8	0.16	60%
Q_p=	0.55 cfs		

Amanda Street

	SF	Acre	
A_T=	60000		
A_B=	9000	0.21	15%
A_D=	51000	1.17	85%
Q_p=	3.54 cfs		

Isabell Street

	SF	Acre	
A_T=	25200		
A_B=	3780	0.09	15%
A_D=	21420	0.49	85%
Q_p=	1.49 cfs		

Future Development to the west

10 Acres × 1.33 cfs/Acre = 13.3 cfs

Bohannan ▲ Huston INC.

Courtyard I
7500 Jefferson St. NE
Albuquerque, NM
87109-4335
www.bhinc.com
voice: 505.823.1000
facsimile: 505.798.7988
toll free: 800.877.5332

FACSIMILE TRANSMITTAL COVER SHEET

Date: November 10, 2005

To: Arlene Portillo

Company: City of Albuquerque

Fax No.: 924-3864

From: Connie Chapin

Project No: 060151

Project Name: Project G

Number of Pages (including Cover): 2

Re: **Pull Hydrology File**

K-10/D36

Comments:

Arlene,
Please pull the hydrology files for the K-Mart site on Coors and Central. I have attached the zone atlas map with the site circled. I will arrange for Albuquerque Reprographics to pick them up this morning have them copied and returned to you. Please contact me at 798-7810 as soon as you have them pulled and I will arrange pick up.
Thank you,
Connie

Original to Follow: ☐ **Yes** ☒ **No**

If you do not receive all pages, please contact Connie at 823-1000.

ENGINEERING ▲
SPATIAL DATA ▲
ADVANCED TECHNOLOGIES ▲

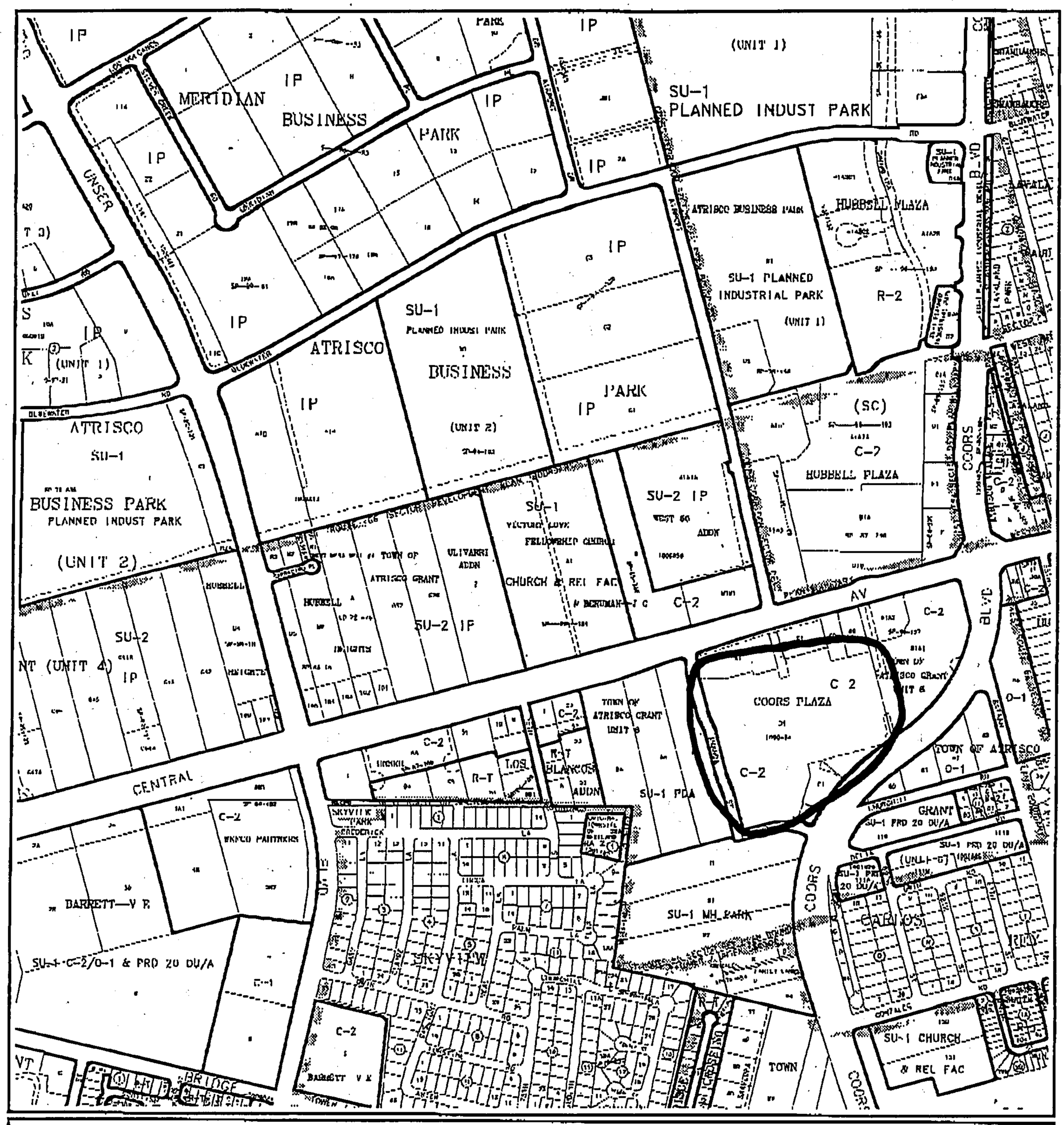

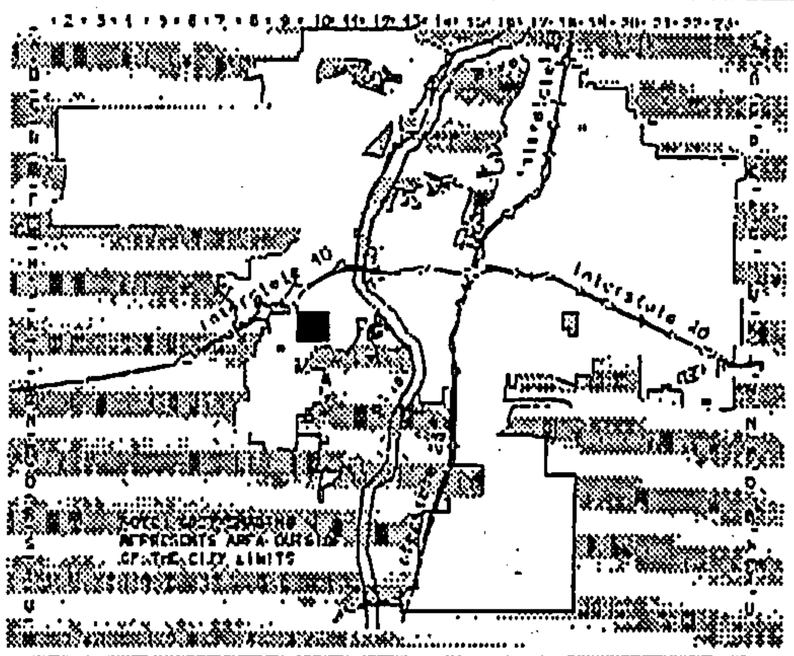

Albuquerque Geographic Information System
PLANNING DEPARTMENT
©Copyright 2004

GRAPHIC SCALE IN FEET
250 0 750 1000

Zone Atlas Page

K-10-Z

Map Amended through October 05, 2004

City of Albuquerque
P.O. BOX 1293 ALBUQUERQUE, NEW MEXICO 87103

October 1, 2001

Bret Wahlen
Great Basin Engineering
2010 North Redland Road
P.O. Box 16747
Salt Lake City, Utah 84116

RE: Amended Grading and Drainage Plan for Central K-Mart (K10-D36) Dated July 6, 2001

Dear Mr. Wahlen:

The above referenced amended drainage plan received September 26, 2001 is approved for Hydrology signoff at DRC. Upon completion of the project the design engineer needs to certify the project prior to release of the Certificate of Occupancy.

If you have any questions please call me a 924-3982.

Sincerely,

Carlos A. Montoya
City Floodplain Administrator

THE CITY OF ALBUQUERQUE IS AN EQUAL OPPORTUNITY/REASONABLE ACCOMMODATION EMPLOYER

DRAINAGE INFORMATION SHEET

K-10 | D36

PROJECT TITLE: Coors Plaza - Kmart Shopping Center ZONE MAP/DRG. FILE #: K-10
DRB #: 1000494 EPC#: 01440-00000-00183 WORK ORDER#: 663381

LEGAL DESCRIPTION: Tracts A thru G, Coors Plaza
CITY ADDRESS:

ENGINEERING FIRM: Great Basin Engineering - South
ADDRESS: 2010 No. Redwood Road
CITY, STATE: Salt Lake City, Ut. 84116
CONTACT: Bret Wahlen | Kirk Randall
PHONE: 801-521-8529
ZIP CODE:

OWNER:
ADDRESS:
CITY, STATE:
CONTACT:
PHONE:
ZIP CODE:

ARCHITECT:
ADDRESS:
CITY, STATE:
CONTACT:
PHONE:
ZIP CODE:

SURVEYOR:
ADDRESS
CITY, STATE:
CONTACT:
PHONE:
ZIP CODE:

CONTRACTOR:
ADDRESS:
CITY, STATE:
CONTACT:
PHONE:
ZIP CODE:

CHECK TYPE OF SUBMITTAL:
- ✓ DRAINAGE REPORT AMENDED
- ___ DRAINAGE PLAN
- ___ CONCEPTUAL GRADING & DRAINAGE PLAN
- ___ GRADING PLAN
- ___ EROSION CONTROL PLAN
- ___ ENGINEER'S CERTIFICATION
- ___ CLOMR/LOMR
- ___ TRAFFIC CIRCULATION LAYOUT (TCL)
- ___ OTHER

WAS A PRE-DESIGN CONFERENCE ATTENDED:
- ___ YES
- ___ NO
- ___ COPY PROVIDED

CHECK TYPE OF APPROVAL SOUGHT:
- ___ SIA / FINANCIAL GUARANTEE RELEASE
- ___ PRELIMINARY PLAT APPROVAL
- ___ S. DEV. PLAN FOR SUB'D. APPROVAL
- ___ S. DEV. PLAN FOR BLDG. PERMIT APPROVAL
- ___ SECTOR PLAN APPROVAL
- ___ FINAL PLAT APPROVAL
- ___ FOUNDATION PERMIT APPROVAL
- ___ BUILDING PERMIT APPROVAL
- ___ CERTIFICATE OF OCCUPANCY APPROVAL
- ___ GRADING PERMIT APPROVAL
- ___ PAVING PERMIT APPROVAL
- ✓ WORK ORDER APPROVAL
- ___ OTHER (SPECIFY)

DATE SUBMITTED: 9-26-01 BY: Kirk Randall

Requests for approvals of Site Development Plans and/or Subdivision Plats shall be accompanied by a drainage submittal. The particular nature , location and scope ot the proposed development defines the degree of drainage detail. One or more of the following levels of submittal may be required based on the following:

1. **Conceptual Grading and Drainage Plan**: Required for approval of Site Development Plans greater than five (5) acres and Sector Plans.
2. **Drainage Plans**: Required for building permits, grading permits, paving permits and site plans less than five (5) acres.
3. **Drainage Report**: Required for subdivisions containing more than ten (10) lots or constituting five (5) acres or more.

RECEIVED
SEP 26 2001
HYDROLOGY SECTION