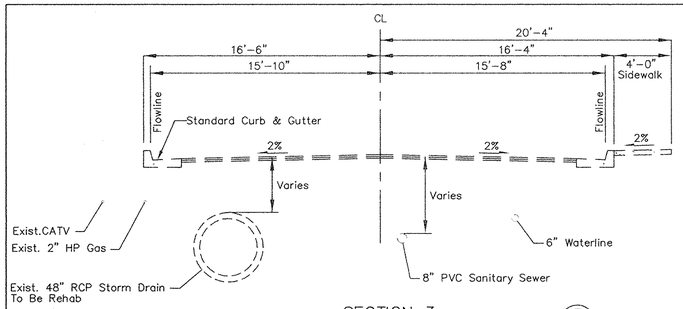

SECTION 3 (3/7 9)

47TH STREET (SOUTH) @ STA. 22+50
SOUTH OF WEST CENTRAL AVE.

SCALE: 1"=5' NOTE: DIMENSIONS ARE APPROXIMATE.

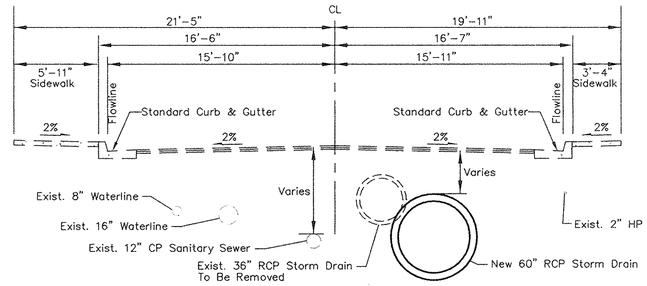

SECTION 5 (5/6 9)

47TH STREET (NORTH) @ STA. 27+00
NORTH OF WEST CENTRAL AVE.

SCALE: 1"=5' NOTE: DIMENSIONS ARE APPROXIMATE.

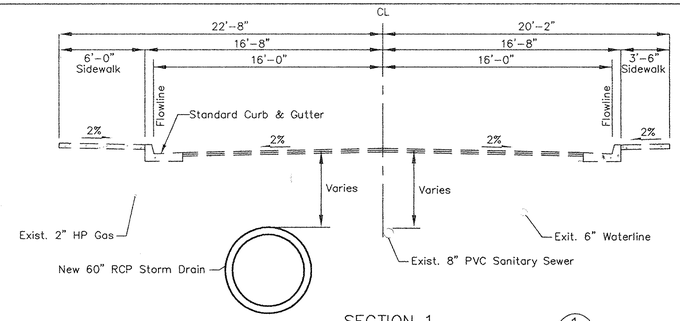

SECTION 1 (1/3 9)

46TH STREET @ STA. 23+50
SOUTH OF WEST CENTRAL AVE.

SCALE: 1"=5' NOTE: DIMENSIONS ARE APPROXIMATE.

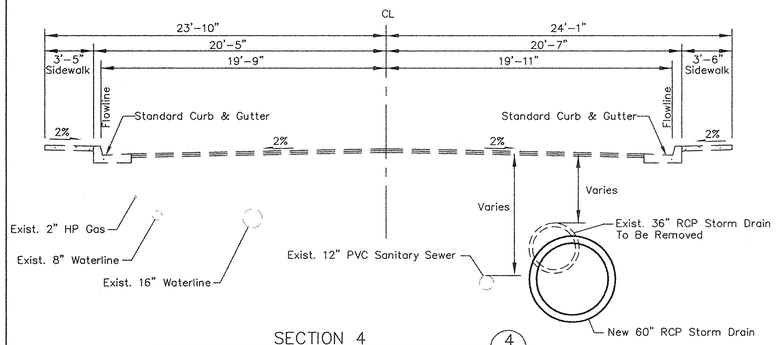

SECTION 4 (4/5 9)

47TH STREET (NORTH) @ STA. 22+50
NORTH OF WEST CENTRAL AVE.

SCALE: 1"=5' NOTE: DIMENSIONS ARE APPROXIMATE.

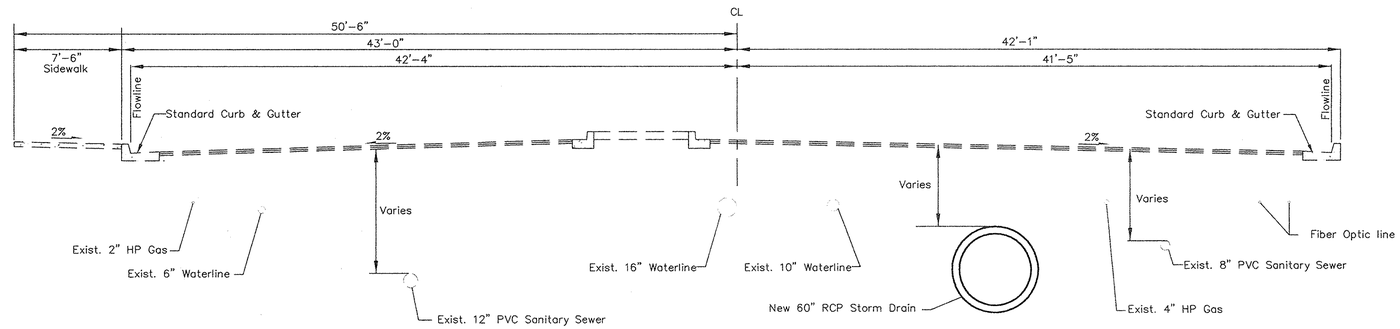

SECTION 2 (2/4 9)

CENTRAL AVENUE @ STA. 13+50

SCALE: 1"=5' NOTE: DIMENSIONS ARE APPROXIMATE.

RECORD DRAWINGS WERE PREPARED FROM INFORMATION PROVIDED BY THE CONTRACTOR

RECORD DRAWING 09/04

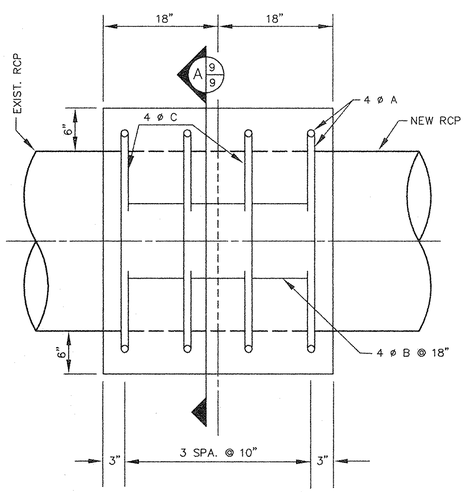

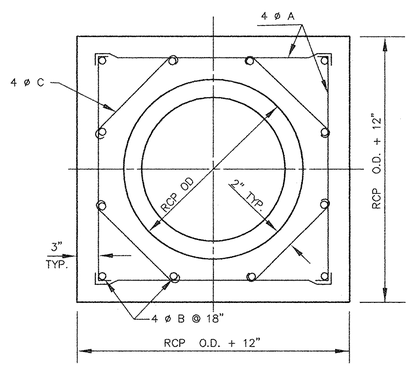

4 ø = No. 4 REINFORCING BAR

SECTION A

INSIDE DIA.	OUTSIDE DIA.	RCP O.D. + 12"	4 ø A (NO. & LENGTH)	4 ø B (NO. & LENGTH)	4 ø C (NO. & LENGTH)	REIN. BARS	CLASS "A" CONC.
18"	23"	2.9167'	16 @ 2'-6"	8 @ 2'-9"	— — — — — — — —	41 LB..	0.69 CU. YD.
24"	30"	3.5000'	16 @ 3'-3"	12 @ 2'-9"	— — — — — — — —	57 LB..	0.91 CU. YD.
30"	37"	4.0833'	16 @ 3'-9"	12 @ 2'-9"	— — — — — — — —	62 LB..	1.17 CU. YD.
36"	44"	4.6667'	16 @ 4'-3"	12 @ 2'-9"	— — — — — — — —	67 LB..	1.44 CU. YD.
48"	58"	5.6333'	16 @ 5'-6"	16 @ 2'-9"	16 @ 2'-9"	118 LB..	2.06 CU. YD.
60"	72"	6.4167'	16 @ 6'-0"	20 @ 2'-9"	16 @ 3'-3"	144 LB..	2.78 CU. YD.

COLLAR DETAILS FOR CONNECTING EXISTING CONC. PIPE CULV. W/ NEW CONC. PIPE CULV.

NOT TO SCALE

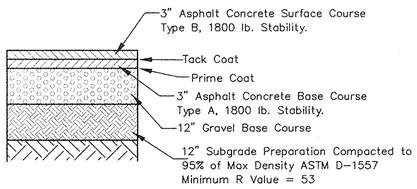

ARTERIAL PAVEMENT SECTION (6")

CENTRAL AVENUE SCALE: 1/2"=1'

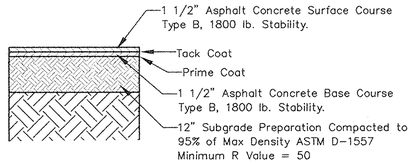

RESIDENTIAL PAVEMENT SECTION (3")

46th & 47th STREETS SCALE: 1/2"=1'

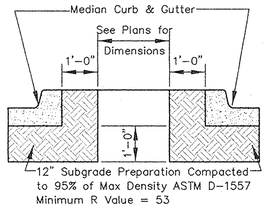

TYPICAL MEDIAN CURB & GUTTER

CENTRAL (MEDIAN)

SCALE: 1/2"=1'

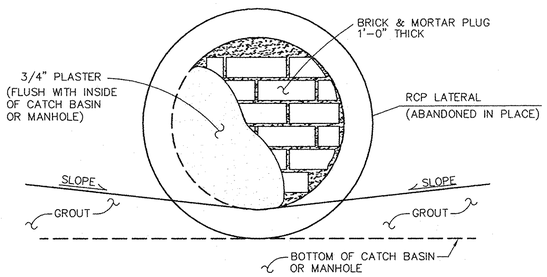

BRICK & MORTAR PLUG

VIEW FROM INSIDE CATCH BASIN OR MANHOLE

NOT TO SCALE

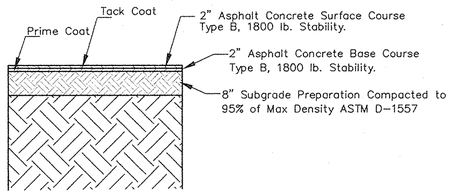

TEMPORARY PAVEMENT SECTION

CENTRAL (MEDIAN)

SCALE: 1/2"=1'

AS BUILT INFORMATION

CONTRACTOR — DATE
WORK STAKED BY — DATE
STREETS ACCEPTANCE BY — DATE
VERIFICATION BY — DATE
DRAWINGS CORRECTED BY — DATE
MICRO-FILM INFORMATION
RECORDED BY — DATE
RECORDED BY — DATE
RECORDED BY — DATE

BENCH MARKS

ALBUQUERQUE CONTROL SURVEY B.M. NO. 17-J12
LOCATED 2.3 MILES WEST OF DOWNTOWN ALBUQUERQUE SOUTHWEST SIDE OF ATRISCO RD.
THE STATION IS AN ACS 3 1/4" ALUM. CAP RIVETTED TO A PIPE 0.25 FT. ABOVE GROUND AND IS STAMPED "17-J12, 1989".
PLANE COORDINATES: X=367999.51, Y=1489049.30, EL= 4935.128

SURVEY INFORMATION

FIELD NOTES

NO.	BY	DATE
1		
2		
3		
4		
5		
6		
7		

ENGINEER'S SEAL

REGISTERED PROFESSIONAL ENGINEER — RICHARD J. LOVATO — NEW MEXICO — 6823

NO.	DATE	REVISIONS	REMARKS	BY
1		DESIGN	DATE: JUL. 2003	
2			DATE: JUL. 2003	
3			DATE: JUL. 2003	
4				

DESIGNED BY: R.L.
DRAWN BY: P.R.
CHECKED BY: J.A.A.

LARKIN GROUP, INC.
CONSULTING ENGINEERS AND SURVEYORS
8500 MENAUL BLVD. NE A-440
(505) 275-7500

CITY OF ALBUQUERQUE
PUBLIC WORKS DEPARTMENT
ENGINEERING DIVISION

TITLE: CENTRAL – ATRISCO DRAINAGE IMPROVEMENTS
46th ST., 47th ST., & CENTRAL AVE.
TYPICAL STREET SECTIONS

Design Review Committee — City Engineer Approval — Last Design Update — Mo./Day/Yr. — Mo./Day/Yr.

City Project No. 674902 | Zone Map No. K-12-Z | Sheet 9 | Of 21