DRAINAGE AND TRANSPORTATION INFORMATION SHEET
(REV 02/2012)

K-14/D029

PROJECT TITLE: ALVARADO URBAN FARM ZONE MAP: K-14
DRB#: EPC#: WORK ORDER#:

LEGAL DESCRIPTION: BETWEEN 1st AND 2nd AND SILVER
CITY ADDRESS: 101 SILVER ST.

ENGINEERING FIRM: MASSOUD MOGHADAM CONTACT: MASSOUD
ADDRESS: 2727 PASEO DE TULAROSA NM PHONE: 505-920-8254
CITY, STATE: SANTA FE NM 87505 ZIP CODE: 87505
EMAIL:

OWNER: HDIC CONTACT: RICK RANNIE
ADDRESS: 100 GOLD ST. SW PHONE: 4150-2182
CITY, STATE: ALBUQUERQUE NM 87100 ZIP CODE:

ARCHITECT: STUDIO EM DESIGN CONTACT: EFTHIMIOS
ADDRESS: 1618 ANDERSON PL SE PHONE: 4003637
CITY, STATE: ALBUQUERQUE NM 87108 ZIP CODE: 87108
EMAIL: efthimios@studioemdesign.com

SURVEYOR: CONTACT:
ADDRESS: PHONE:
CITY, STATE: ZIP CODE:

CONTRACTOR: MESA VISTA ELECTRIC + CONSTRUCTION CONTACT: JAMES DELL
ADDRESS: 301 EL PUEBLO RD, LOS RANCHOS PHONE: 670-1896
CITY, STATE: ALB NM 87114 ZIP CODE:

TYPE OF SUBMITTAL:
- ✓ DRAINAGE REPORT
- ____ DRAINAGE PLAN 1st SUBMITTAL
- ____ DRAINAGE PLAN RESUBMITTAL
- ____ CONCEPTUAL G & D PLAN
- ____ GRADING PLAN
- ____ EROSION CONTROL PLAN
- ____ ENGINEER'S CERT (HYDROLOGY)
- ____ CLOMR/LOMR
- ____ TRAFFIC CIRCULATION LAYOUT
- ____ ENGINEER'S CERT (TCL)
- ____ ENGINEER'S CERT (DRB SITE PLAN)
- ____ OTHER (SPECIFY)

CHECK TYPE OF APPROVAL SOUGHT:
- ____ SIA/FINANCIAL GUARANTEE RELEASE
- ____ PRELIMINARY PLAT APPROVAL
- ____ S. DEV. PLAN FOR SUB'D APPROVAL
- ____ S. DEV. FOR BLDG. PERMIT APPROVAL
- ____ SECTOR PLAN APPROVAL
- ____ FINAL PLAT APPROVAL
- ____ FOUNDATION PERMIT APPROVAL
- ____ BUILDING PERMIT APPROVAL
- ____ CERTIFICATE OF OCCUPANCY (PERM)
- ____ CERTIFICATE OF OCCUPANCY (TEMP)
- ____ GRADING PERMIT APPROVAL
- ____ PAVING PERMIT APPROVAL
- ____ WORK ORDER APPROVAL
- ____ GRADING CERTIFICATION
- ____ OTHER (SPECIFY) SO-19

WAS A PRE-DESIGN CONFERENCE ATTENDED:
- ____ YES
- ____ NO
- ____ COPY PROVIDED

DATE SUBMITTED: BY:

Requests for approvals of Site Development Plans and/or Subdivision Plats shall be accompanied by a drainage submittal. The particular nature, location, and scope to the proposed development defines the degree of drainage detail. One or more of the following levels of submittal may be required based on the following:

1. **Conceptual Grading and Drainage Plan**: Required for approval of Site Development Plans greater than five (5) acres and Sector Plans.
2. **Drainage Plans**: Required for building permits, grading permits, paving permits and site plans less than five (5) acres.
3. **Drainage Report**: Required for subdivision containing more than ten (10) lots or constituting five (5) acres or more.

CITY OF ALBUQUERQUE

Planning Department
Transportation Development Services Section

December 1, 2011

Claudio A. Vigil, Registered Architect
Claudio Vigil Architects
1801 Rio Grande Blvd. NW
Albuquerque, NM 87104

Re: Certification Submittal for Permanent Building Certificate of Occupancy for Silver Gardens Phase 2 [K-14 / D099]
100 Silver SW
Architect's Stamp Dated 11/30/11

Dear Mr. Vigil:

Based upon the information provided in your submittal received 11/30/11, Transportation Development has no objection to the issuance of a Permanent Certificate of Occupancy.

This letter serves as a "green tag" from Transportation Development for a Permanent Certificate of Occupancy to be issued by the Building and Safety Division.

If you have any questions, please contact me at 505-924-3630.

Sincerely,

Nilo E. Salgado-Fernandez, P.E.
Senior Traffic Engineer
Development and Building Services
Planning Department

c: Engineer
Hydrology file
CO Clerk

PO Box 1293
Albuquerque
NM 87103
www.cabq.gov

DRAINAGE AND TRANSPORTATION INFORMATION SHEET
(REV. 1/28/2003rd)

PROJECT TITLE: SILVER GARDENS PHASE 2 ZONE MAP/DRG. FILE #: K-14 / D099
DRB #: _____ EPC#: _____ WORK ORDER#: _____

LEGAL DESCRIPTION: LOT 2, SILVER GARDENS, UPC 101405 724434 221915
CITY ADDRESS: 100 SILVER AVE

ENGINEERING FIRM: Claudio Vigil Architects
ADDRESS: 1801 Rio Grande Blvd NW
CITY, STATE: Albuquerque, NM
CONTACT: ~~Arthur Blessen~~ LOUISE HOLLESEN
PHONE: 505.842.1113
ZIP CODE: 87104

OWNER: _____
ADDRESS: _____
CITY, STATE: _____
CONTACT: _____
PHONE: _____
ZIP CODE: _____

ARCHITECT: Claudio Vigil Architects
ADDRESS: 1801 Rio Grande Blvd NW
CITY, STATE: Albuquerque, NM
CONTACT: ~~Arthur Blessen~~ LOUISE HOLLESEN
PHONE: 505.842.1113
ZIP CODE: 87104

SURVEYOR: _____
ADDRESS: _____
CITY, STATE: _____
CONTACT: _____
PHONE: _____
ZIP CODE: _____

CONTRACTOR: _____
ADDRESS: _____
CITY, STATE: _____
CONTACT: _____
PHONE: _____
ZIP CODE: _____

CHECK TYPE OF SUBMITTAL:

- ☐ DRAINAGE REPORT
- ☐ DRAINAGE PLAN 1st SUBMITTAL, ***REQUIRES TCL or equal***
- ☐ DRAINAGE PLAN RESUBMITTAL
- ☐ CONCEPTUAL GRADING & DRAINAGE PLAN
- ☐ GRADING PLAN
- ☐ EROSION CONTROL PLAN
- ☐ ENGINEER'S CERTIFICATION (HYDROLOGY)
- ☐ CLOMR/LOMR
- ☒ TRAFFIC CIRCULATION LAYOUT (TCL)
- ☐ ENGINEERS CERTIFICATION (TCL)
- ☐ ENGINEERS CERTIFICATION (DRB APPR. SITE PLAN)
- ☐ OTHER

CHECK TYPE OF APPROVAL SOUGHT:

- ☐ SIA / FINANCIAL GUARANTEE RELEASE
- ☐ PRELIMINARY PLAT APPROVAL
- ☐ S. DEV. PLAN FOR SUB'D. APPROVAL
- ☐ S. DEV. PLAN FOR BLDG. PERMIT APPROVAL
- ☐ SECTOR PLAN APPROVAL
- ☐ FINAL PLAT APPROVAL
- ☐ FOUNDATION PERMIT APPROVAL
- ☐ BUILDING PERMIT APPROVAL
- ☒ CERTIFICATE OF OCCUPANCY (PERM.)
- ☐ CERTIFICATE OF OCCUPANCY (TEMP.)
- ☐ GRADING PERMIT APPROVAL
- ☐ PAVING PERMIT APPROVAL
- ☐ WORK ORDER APPROVAL
- ☐ OTHER (SPECIFY)

RECEIVED
NOV 3 0 2011
HYDROLOGY SECTION

WAS A PRE-DESIGN CONFERENCE ATTENDED:

- ☐ YES
- ☐ NO
- ☐ COPY PROVIDED

DATE SUBMITTED: 11/30/11 BY: Louise Hollesen

Requests for approvals of Site Development Plans and/or Subdivision Plats shall be accompanied by a drainage submittal. The particular nature , location and scope ot the proposed development defines the degree of drainage detail. One or more of the following levels of submittal may be required based on the following:

1. **Conceptual Grading and Drainage Plan**: Required for approval of Site Development Plans greater than five (5) acres and Sector Plans.
2. **Drainage Plans**: Required for building permits, grading permits, paving permits and site plans less than five (5) acres.
3. **Drainage Report**: Required for subdivisions containing more than ten (10) lots or constituting five (5) acres or more.

CLAUDIO VIGIL ARCHITECTS

November 30, 2011

Nilo Salgado-Fernandez
Development & Building Services Division
600 2nd St. NW
Albuquerque, New Mexico

Re: Traffic Certification
Silver Gardens Phase 2
100 Silver Avenue SW

Dear Mr. Salgado-Fernandez:

I, Claudio Vigil, NMRA 1236, of the firm Claudio Vigil Architects, hereby certify that this project is in substantial compliance with and in accordance with the design intent of the approved Site Development Plan dated August 2, 2010. The record information edited onto the original design document has been obtained by Louise Hollesen of the firm Claudio Vigil Architects. I further certify that I have personally visited the project site on November 30, 2011 and have determined by visual inspection that the survey data provided is representative of actual site conditions and is true and correct to the best of my knowledge and belief. This certification is submitted in support of a request for a Certificate of Occupancy.

The record information presented hereon is not necessarily complete and intended only to verify substantial compliance of the traffic aspects of this project. Those relying on the record document are advised to obtain independent verification of its accuracy before using it for any other purpose.

Signature of engineer or architect

11/30/11
Date

RECEIVED
NOV 3 0 2011
HYDROLOGY SECTION

STATE OF NEW MEXICO
CLAUDIO ANTONIO VIGIL
1236
11/30/11
REGISTERED ARCHITECT

Silver Ave SW

N

Block walls.

Existing Back sidewalk

8'-0"

5'

New Building.

10"

Expansion Joint

flush

PNM TRANSFORMER PAD. LEVEL WITH WALK

5'

TRANSPORTATION APPROVED
~~NSP~~ 04/28/11

2nd STREET

curb + gutter

PIPE BALLARDS.

WATER METER VAULT

1st St SW

6'-8" WIDE NEW SIDEWALK RAMP.

water meter doors must open fully as intended

OK

4-27-11

924-3992

K-11D099

NEW 10'-0" WIDE DRIVE ENTRANCE

Lead Ave SW

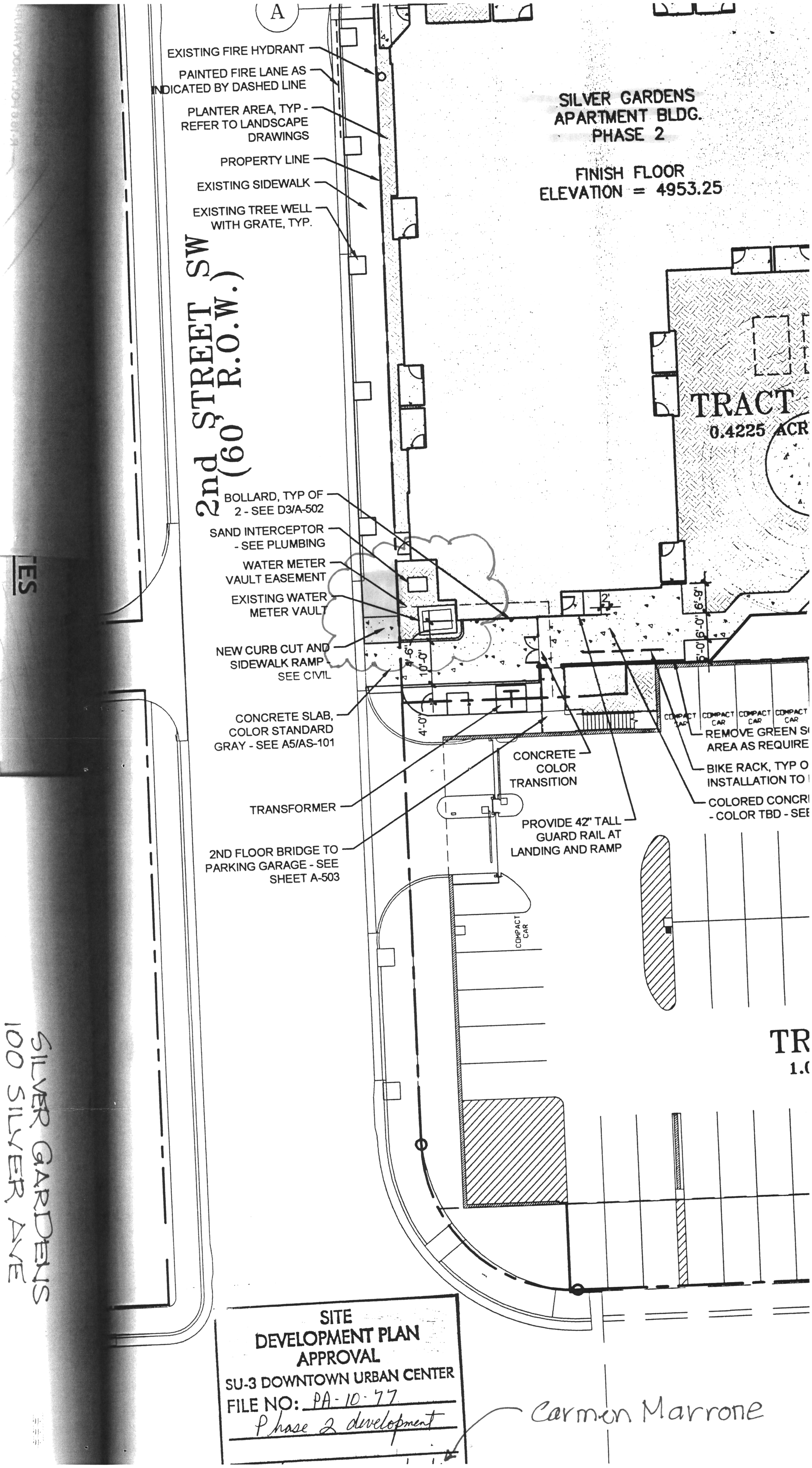

ES

se notes could cause
njury.

ut prior written approval fro

SILVER GARDENS
100 SILVER AVE
PHASE 2

CITY OF ALBUQUERQUE

November 29, 2011

Gilbert Aldaz, P.E.
Applied Engineering & Survey
1605 Blair Dr. NE
Albuquerque, NM 87112

Re: Silver Gardens Phase II, 100 Silver Ave SW,
Request for Permanent C.O. - Approved
Engineer's Stamp dated: 06-06-2011, (K-14/D099)
Certification dated: 11-29-11

Dear Mr. Aldaz,

Based upon the information provided in the Certification received 11-29-11, the above referenced Certification is approved for a release of a Permanent Certificate of Occupancy by Hydrology.

Hydrology is asking for an electronic copy, in .pdf format, of this as-built certification for our records. This certification can be e-mailed to me at: tsims@cabq.gov.

If you have any questions, you can contact me at 924-3982.

Sincerely,

Timothy E. Sims,
Plan Checker—Hydrology Section
Development and Building Services

C: CO Clerk—Katrina Sigala
File

PO Box 1293
Albuquerque
NM 87103
www.cabq.gov

DRAINAGE AND TRANSPORTATION INFORMATION SHEET
(REV. 1/28/2003rd)

PROJECT TITLE: SILVER GARDENS → PHASE II Apartments ZONE MAP/DRG. FILE #: K-14/D99
DRB #: 1006936 EPC#: WORK ORDER#:

LEGAL DESCRIPTION: Block 29 Transportation Center
CITY ADDRESS: NE Corner Lead AVE SW AND 2nd Street SW

ENGINEERING FIRM: APPLIED ENGR. & SURVEY INC CONTACT: Gilbert Aldaz
ADDRESS: 1605 Blair Dr. NE PHONE: 480-8125
CITY, STATE: Albuquerque, NM ZIP CODE: 87112

OWNER: CONTACT:
ADDRESS: PHONE:
CITY, STATE: ZIP CODE:

ARCHITECT: Claudio Vigil Architects CONTACT: Louise Hollesen
ADDRESS: 1801 Rio Grande Blvd NW PHONE: 842-1113
CITY, STATE: Albuq., NM ZIP CODE: 87104

SURVEYOR: CONTACT:
ADDRESS PHONE:
CITY, STATE: ZIP CODE:

CONTRACTOR: CONTACT:
ADDRESS: PHONE:
CITY, STATE: ZIP CODE:

CHECK TYPE OF SUBMITTAL:

___ DRAINAGE REPORT
___ DRAINAGE PLAN 1st SUBMITTAL, *REQUIRES TCL or equal*
___ DRAINAGE PLAN RESUBMITTAL
___ CONCEPTUAL GRADING & DRAINAGE PLAN
___ GRADING PLAN
___ EROSION CONTROL PLAN
X ENGINEER'S CERTIFICATION (HYDROLOGY)
___ CLOMR/LOMR
___ TRAFFIC CIRCULATION LAYOUT (TCL)
___ ENGINEERS CERTIFICATION (TCL)
___ ENGINEERS CERTIFICATION (DRB-APPR. SITE PLAN)
___ OTHER

CHECK TYPE OF APPROVAL SOUGHT:

___ SIA / FINANCIAL GUARANTEE RELEASE
___ PRELIMINARY PLAT APPROVAL
___ S. DEV. PLAN FOR SUB'D. APPROVAL
___ S. DEV. PLAN FOR BLDG. PERMIT APPROVAL
___ SECTOR PLAN APPROVAL
___ FINAL PLAT APPROVAL
___ FOUNDATION PERMIT APPROVAL
___ BUILDING PERMIT APPROVAL
X CERTIFICATE OF OCCUPANCY (PERM.)
___ CERTIFICATE OF OCCUPANCY (TEMP.)
___ GRADING PERMIT APPROVAL
___ PAVING PERMIT APPROVAL
___ WORK ORDER APPROVAL
___ OTHER (SPECIFY)

RECEIVED
NOV 2 2011
HYDROLOGY SECTION

RECEIVED
NOV 29 2011
HYDROLOGY SECTION

WAS A PRE-DESIGN CONFERENCE ATTENDED:

___ YES
X NO
___ COPY PROVIDED

*REVISED GRADING IN LANDSCAPE AREA

DATE SUBMITTED: 11-29-11 BY: Gilbert Aldaz

Requests for approvals of Site Development Plans and/or Subdivision Plats shall be accompanied by a drainage submittal. The particular nature, location and scope of the proposed development defines the degree of drainage detail. One or more of the following levels of submittal may be required based on the following:

1. **Conceptual Grading and Drainage Plan:** Required for approval of Site Development Plans greater than five (5) acres and Sector Plans.
2. **Drainage Plans:** Required for building permits, grading permits, paving permits and site plans less than five (5) acres.
3. **Drainage Report:** Required for subdivisions containing more than ten (10) lots or constituting five (5) acres or more

CITY OF ALBUQUERQUE

April 28, 2010

Gilbert Aldaz, P.E.
Applied Engineering & Survey
1605 Blair Dr. NE
Albuquerque, NM 87112

Re: Silver Gardens Ph. I, 312 2nd St SW,
Request for Permanent C.O.—Approved
Engineer's Stamp dated: 11-07-08 (K-14/D099)
Certification dated: 04-28-10

Dear Mr. Aldaz,

Based upon the information provided in the Certification received 4-28-10, the above referenced Certification is approved for a release of a Permanent Certificate of Occupancy by Hydrology.

If you have any questions, you can contact me at 924-3982.

Sincerely,

Timothy E. Sims,
Plan Checker—Hydrology Section
Development and Building Services

C: CO Clerk—Katrina Sigala
File

PO Box 1293

Albuquerque

NM 87103

www.cabq.gov

DRAINAGE AND TRANSPORTATION INFORMATION SHEET
(REV. 1/28/2003rd)

PROJECT TITLE: SILVER GARDENS ZONE MAP/DRG. FILE #: K-14/D99
DRB #: 1006936 EPC#: WORK ORDER#:

LEGAL DESCRIPTION: Block 29 Transportation Center
CITY ADDRESS: NE Corner Lead AVE SW AND 2nd Street SW

ENGINEERING FIRM: APPLIED ENGR. & SURVEY, INC CONTACT: Gilbert Aldaz
ADDRESS: 1605 Blair Dr. NE PHONE: 480-8125
CITY, STATE: Albuquerque, NM ZIP CODE: 87112

OWNER: CONTACT:
ADDRESS: PHONE:
CITY, STATE: ZIP CODE:

ARCHITECT: CLAUDIO Vigil Architects CONTACT: Phil Robinson
ADDRESS: 1801 Rio Grande Blvd NW PHONE: 842-1113
CITY, STATE: Albuq., NM ZIP CODE: 87104

SURVEYOR: CONTACT:
ADDRESS PHONE:
CITY, STATE: ZIP CODE:

CONTRACTOR: CONTACT:
ADDRESS: PHONE:
CITY, STATE: ZIP CODE:

CHECK TYPE OF SUBMITTAL:

___ DRAINAGE REPORT
___ DRAINAGE PLAN 1st SUBMITTAL, *REQUIRES TCL or equal*
___ DRAINAGE PLAN RESUBMITTAL
___ CONCEPTUAL GRADING & DRAINAGE PLAN
___ GRADING PLAN
___ EROSION CONTROL PLAN
X ENGINEER'S CERTIFICATION (HYDROLOGY)
___ CLOMR/LOMR
___ TRAFFIC CIRCULATION LAYOUT (TCL)
___ ENGINEERS CERTIFICATION (TCL)
___ ENGINEERS CERTIFICATION (DRB APPR. SITE PLAN)
___ OTHER

CHECK TYPE OF APPROVAL SOUGHT:

___ SIA / FINANCIAL GUARANTEE RELEASE
___ PRELIMINARY PLAT APPROVAL
___ S. DEV. PLAN FOR SUB'D. APPROVAL
___ S. DEV. PLAN FOR BLDG. PERMIT APPROVAL
___ SECTOR PLAN APPROVAL
___ FINAL PLAT APPROVAL
___ FOUNDATION PERMIT APPROVAL
___ BUILDING PERMIT APPROVAL
X CERTIFICATE OF OCCUPANCY (PERM.) PHASE I
___ CERTIFICATE OF OCCUPANCY (TEMP.)
___ GRADING PERMIT APPROVAL
___ PAVING PERMIT APPROVAL
___ WORK ORDER APPROVAL
___ OTHER (SPECIFY)

RECEIVED
APR 28 2010
HYDROLOGY SECTION

WAS A PRE-DESIGN CONFERENCE ATTENDED:

___ YES
X NO
___ COPY PROVIDED

DATE SUBMITTED: 04-29-10 BY: Gilbert Aldaz

Requests for approvals of Site Development Plans and/or Subdivision Plats shall be accompanied by a drainage submittal. The particular nature , location and scope ot the proposed development defines the degree of drainage detail. One or more of the following levels of submittal may be required based on the following:

1. **Conceptual Grading and Drainage Plan:** Required for approval of Site Development Plans greater than five (5) acres and Sector Plans.
2. **Drainage Plans:** Required for building permits, grading permits, paving permits and site plans less than five (5) acres.
3. **Drainage Report:** Required for subdivisions containing more than ten (10) lots or constituting five (5) acres or

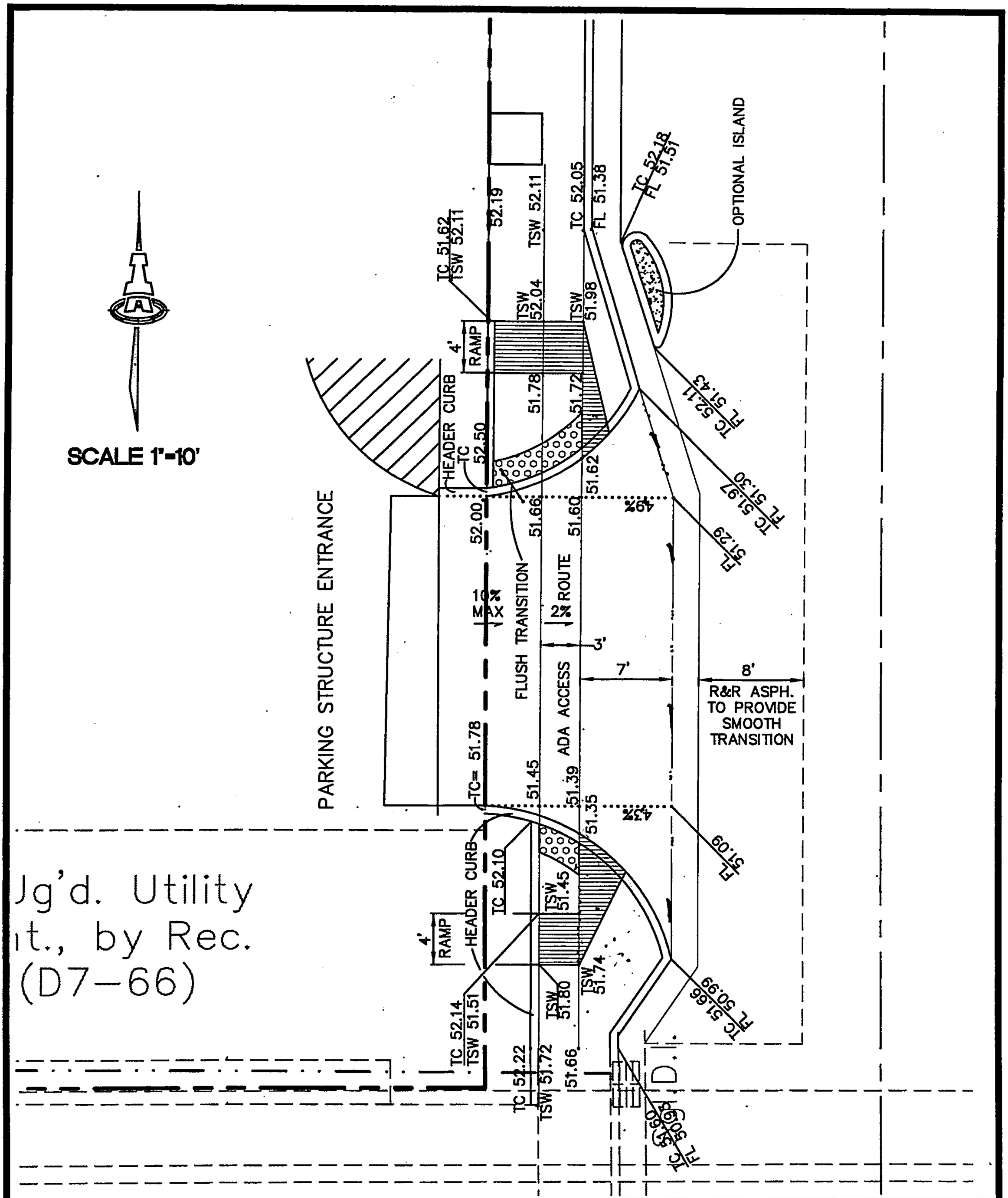

ISAACSON & ARFMAN, P.A.
Consulting Engineering Associates
Albuquerque, New Mexico
1691 C-701 entry fixes.dwg feb 19,2010

PROJECT SILVER GARDENS: 1ST ST.

JOB NO. 1691 BY FCA DATE 02/2010

M:\CAD FILES\1600-1699\1691\dwg\1691 C-701 entry fixes.dwg, 2/19/2010 11:31:11 AM, DLP

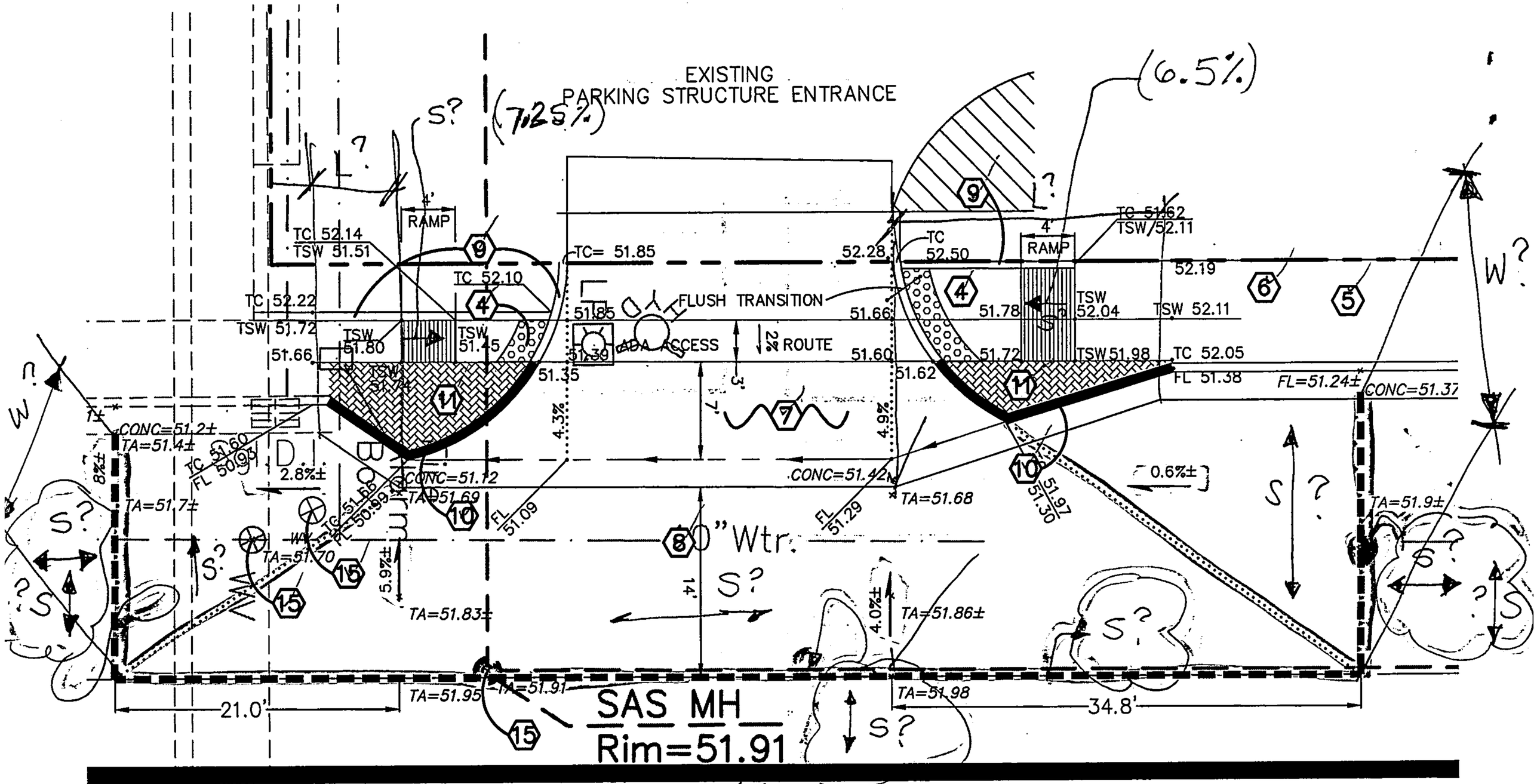

1. what are the tie in slopes on the N, S & E side of proposed pvmt. R/R Limits (x-slope & profile slopes)

PARKING GARAGE ENTRY 1

DETAIL F

Salgado-Fernandez, Nilo E.

To: Olson, Paul L.

Subject: RE: Silver Gardens - parking structure entry - asphalt removal

Paul:

- What are the tie in slopes (x-slope & profile slopes) on the north, south and east side and beyond the proposed limits of the pvmt. r/r(provide extra info)?
- Otherwords, provide a x-slope and profile grades/slopes on and beyond (50-60 ft on each approach) to ensure proposed design doesn't interfer with vehicle pathway (smooth transition from existing through proposed to existing pavement {without losing much of the vehicle speed}).
- The width and length for the over all pavement work need to be provided.

From: Olson, Paul L.
Sent: Wednesday, March 17, 2010 9:03 AM
To: Salgado-Fernandez, Nilo E.
Subject: FW: Silver Gardens - parking structure entry - asphalt removal

Let me know your thoughts

From: Genny Donart [mailto:gennyd@iacivil.com]
Sent: Wednesday, March 17, 2010 8:19 AM
To: Olson, Paul L.
Cc: Salgado-Fernandez, Nilo E.; Fred Arfman; 'Rob Straka'
Subject: RE: Silver Gardens - parking structure entry - asphalt removal

Good morning Paul,

Attached is the exhibit showing my proposed extents of asphalt removal and the slopes it will create at various locations. Please contact me when you've had a chance to review it.

Genny Donart, P.E.

Design Engineer
Isaacson & Arfman, P.A.
Consulting Engineering Associates
128 Monroe St. N.E.
Albuquerque, NM 87108
Phone: (505)268-8828
Fax: (505)268-2632
Email: gennyd@iacivil.com

From: Olson, Paul L. [mailto:polson@cabq.gov]

Sent: Friday, March 12, 2010 7:42 AM
To: Genny Donart
Cc: Salgado-Fernandez, Nilo E.
Subject: FW: Silver Gardens - parking structure entry - asphalt removal

Genny,

Here are Nilo's comments.

I am curios that no additional asphalt must be removed at the north end (entrance)? That end seemed steeper.

Paul Olson

From: Salgado-Fernandez, Nilo E.
Sent: Friday, March 12, 2010 7:37 AM
To: Olson, Paul L.
Subject: RE: Silver Gardens - parking structure entry - asphalt removal

Paul have Genny provide a cross section verifying that there wouldn't be any issues (issues for the asphalt pavement: longitudinal and lateral for vehicle pathway) for the roadway. If there are any issues, then solutions need to be provided.
Nilo

From: Olson, Paul L.
Sent: Friday, March 12, 2010 7:29 AM
To: Salgado-Fernandez, Nilo E.
Subject: FW: Silver Gardens - parking structure entry - asphalt removal

Let me know what you think.

From: Genny Donart [mailto:gennyd@iacivil.com]
Sent: Thursday, March 11, 2010 4:14 PM
To: 'Rob Straka'; Olson, Paul L.; 'Bob Richardson'
Cc: Fred Arfman
Subject: Silver Gardens - parking structure entry - asphalt removal

Good afternoon all,

After looking over the shots that Bob got for me this morning, I found that pulling the flowline back 4' as Bob requested still leaves us with the possibility of scraping bumpers. If the additional 8' of asphalt is removed as called out on the change order sheet, back bumpers will clear the asphalt.

The entry should be built as called out on the change order, with one exception. Please extend the limits of the removal an additional 4' to the south. This will make the transition from the FL at the south bump-out back to existing asphalt about 8%.

Genny Donart, P.E.

Design Engineer
Isaacson & Arfman, P.A.
Consulting Engineering Associates
128 Monroe St. N.E.
Albuquerque, NM 87108
Phone: (505)268-8828
Fax: (505)268-2632
Email: gennyd@iacivil.com

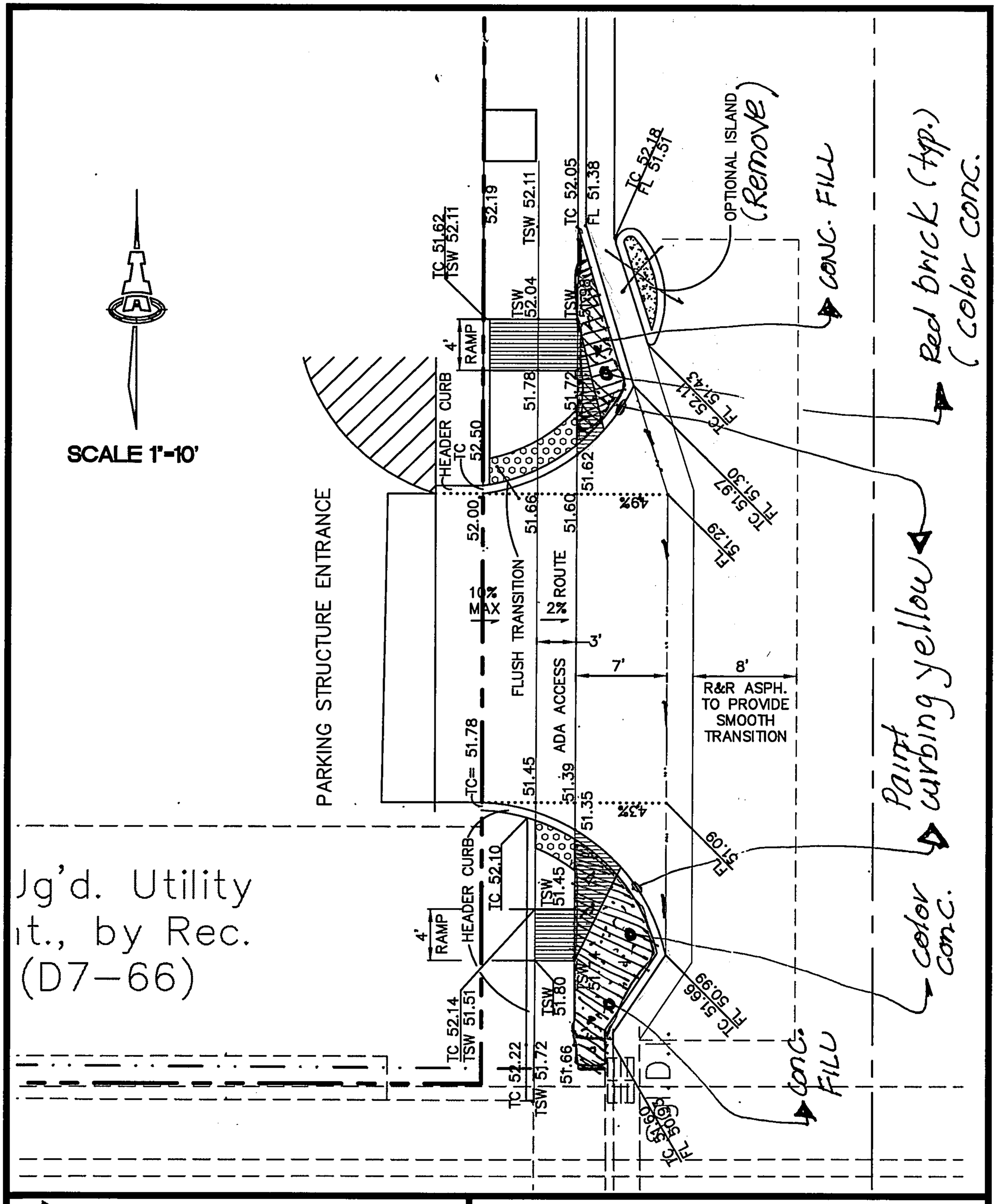

ISAACSON & ARFMAN, P.A.
Consulting Engineering Associates
Albuquerque, New Mexico
1691 C-701 entry fixes.dwg feb 19,2010

PROJECT SILVER GARDENS: 1ST ST.

JOB NO. 1691 BY FCA DATE 02/2010

M:\CAD FILES\1600-1699\1691\dwg\1691 C-701 entry fixes.dwg, 2/19/2010 11:31:11 AM, DLP

ALT #2 PROPOSED CHANGE

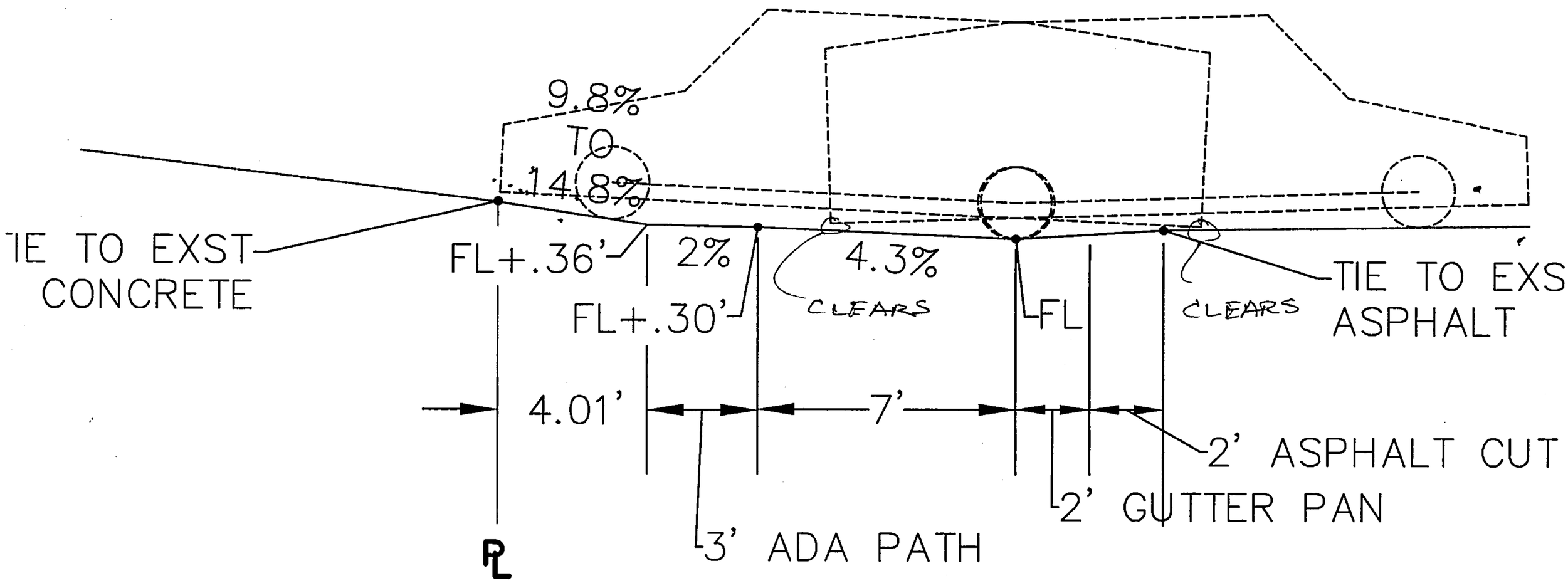

ADD'L 4' INTO ROAD

1" = 4'

PA-08-139
12/9/08

312 2ND St
SW
1st / 2ND (SU-3)
LEAD

② Field ① AA
2ND
Silver
Foreman
Has original
file

CITY OF ALBUQUERQUE

October 14, 2008

Gilbert Aldaz, PE
Applied Engineering & Survey, Inc.
1605 Blair Dr. NE
Albuquerque, NM 87112

Re: Silver Gardens Grading and Drainage Plan
Engineer's Stamp dated 9-17-08 (K14/D99)

Dear Mr. Aldaz,

Based upon the information provided in your submittal dated 9-16-08, the above referenced plan cannot be approved for Building Permit until the following comments are addressed.

- The storm drain and sanitary lines on the southern side are missing some key inverts and, therefore, I cannot tell if your onsite storm drain works.
- All the curb work and inlet construction must be by City Work Order and be denoted as such on the plan.

If you have any questions, you can contact me at 924-3986.

Sincerely,

Bradley L. Bingham, PE
Principal Engineer, Planning Dept
Development and Building Services

C: file

PO Box 1293
Albuquerque
NM 87103
www.cabq.gov

CITY OF ALBUQUERQUE

December 4, 2008

Gilbert Aldaz, PE
Applied Engineering & Survey, Inc.
1605 Blair Dr. NE
Albuquerque, NM 87112

Re: Silver Gardens Grading and Drainage Plan
Engineer's Stamp dated 11-7-08 (K14/D99)

Dear Mr. Aldaz,

Based upon the information provided in your submittal dated 11-10-08, the above referenced plan is approved for Building Permit. Please attach a copy of this approved plan to the construction sets prior to sign-off by Hydrology.

Please attach a copy of this approved plan to the construction sets prior to sign-off by Hydrology.

If you have any questions, you can contact me at 924-3986.

Sincerely,

Bradley L. Bingham, PE
Principal Engineer, Planning Dept
Development and Building Services

C: file

PO Box 1293
Albuquerque
NM 87103
www.cabq.gov

CITY OF ALBUQUERQUE

Planning Department
Transportation Development Services Section

April 23, 2010

Claudio A. Vigil, Registered Architect
Claudio Vigil Architects
1801 Rio Grande Blvd. NW
Estancia, NM 87104

Re: Certification Submittal for Final Building Certificate of Occupancy for
Silver Gardens Parking Garage [K-14 / D099]
321 2nd Street SW
Architect's Stamp Dated 04/20/10

Dear Mr. Vigil:

Based upon the information provided in your submittal received 04-22-10, Transportation Development has no objection to the issuance of a Permanent Certificate of Occupancy.

This letter serves as a "green tag" from Transportation Development for a Permanent Certificate of Occupancy to be issued by the Building and Safety Division.

If you have any questions, please contact me at 505-924-3630.

Sincerely,

Nilo E. Salgado-Fernandez, P.E.
Senior Traffic Engineer
Development and Building Services
Planning Department

c: Engineer
Hydrology file
CO Clerk

PO Box 1293

Albuquerque

NM 87103

www.cabq.gov

CLAUDIO VIGIL ARCHITECTS

City of Albuquerque
Development & Building Services
600 2nd Street NW
Albuquerque, NM 87103

Re: Traffic Certification
Silver Gardens Parking Garage
312 2nd Street SW

Dear Mr. Salgado-Fernandez,

I, Claudio Vigil, NMRA #1236, of the firm Claudio Vigil Architects, hereby certify that this project is in substantial compliance with and in accordance with the design intent of the Administrative Approval plan dated October 31, 2008, stamped and approved December 9, 2008. The record information edited onto the original design document has been obtained by Louise Hollesen of Claudio Vigil Architects. I further certify that I have personally visited the project site on April 20, 2010 and have determined by visual inspection that the data is representative of actual site conditions and is true and correct to the best of my knowledge and belief. This certification is submitted in support of a request for a permanent Certificate of Occupancy.

The record information presented hereon is not necessarily complete and intended only to verify substantial compliance of the traffic aspects of this project. Those relying on the record document are advised to obtain independent verification of its accuracy before using it for any other purpose.

Claudio Vigil
Principal

date : 4/21/10

STATE OF NEW MEXICO
CLAUDIO ANTONIO VIGIL
1236
4/20/10
REGISTERED ARCHITECT

RECEIVED
APR 22 2010
HYDROLOGY SECTION

Ambysis P.C., DBA, Claudio Vigil Architects 1801 Rio Grande Blvd., NW • Albuquerque, NM 87104 505/842-1113 Fax 505/842-1330

DRAINAGE AND TRANSPORTATION INFORMATION SHEET
(REV 12/2005)

PROJECT TITLE: SILVER GARDENS PARKING GARAGE ZONE MAP: K-14 / D099
DRB#: 10060936 EPC#: _____ WORK ORDER#: _____

LEGAL DESCRIPTION: BLOCK 29 TRANSPORTATION CENTER
CITY ADDRESS: 312 2nd STREET SW - NE CORNER OF LEAD AVE & 2nd ST.

ENGINEERING FIRM: _____ CONTACT: _____
ADDRESS: _____ PHONE: _____
CITY, STATE: _____ ZIP CODE: _____

OWNER: _____ CONTACT: _____
ADDRESS: _____ PHONE: _____
CITY, STATE: _____ ZIP CODE: _____

ARCHITECT: CLAUDIO VIGIL ARCHITECTS CONTACT: LOUISE HOLLESEN
ADDRESS: 1801 RIO GRANDE BLVD NW PHONE: 842-1113
CITY, STATE: ALBUQUERQUE, NM ZIP CODE: 87104

SURVEYOR: _____ CONTACT: _____
ADDRESS: _____ PHONE: _____
CITY, STATE: _____ ZIP CODE: _____

CONTRACTOR: _____ CONTACT: _____
ADDRESS: _____ PHONE: _____
CITY, STATE: _____ ZIP CODE: _____

TYPE OF SUBMITTAL:
- ____ DRAINAGE REPORT
- ____ DRAINAGE PLAN 1st SUBMITTAL
- ____ DRAINAGE PLAN RESUBMITTAL
- ____ CONCEPTUAL G & D PLAN
- ____ GRADING PLAN
- ____ EROSION CONTROL PLAN
- ____ ENGINEER'S CERT (HYDROLOGY)
- ____ CLOMR/LOMR
- ____ TRAFFIC CIRCULATION LAYOUT
- ____ ENGINEER'S CERT (TCL)
- ____ ENGINEER'S CERT (DRB SITE PLAN)
- X OTHER (SPECIFY) AA

CHECK TYPE OF APPROVAL SOUGHT:
- ____ SIA/FINANCIAL GUARANTEE RELEASE
- ____ PRELIMINARY PLAT APPROVAL
- ____ S. DEV. PLAN FOR SUB'D APPROVAL
- ____ S. DEV. FOR BLDG. PERMIT APPROVAL
- ____ SECTOR PLAN APPROVAL
- ____ FINAL PLAT APPROVAL
- ____ FOUNDATION PERMIT APPROVAL
- ____ BUILDING PERMIT APPROVAL
- X CERTIFICATE OF OCCUPANCY (PERM)
- ____ CERTIFICATE OF OCCUPANCY (TEMP)
- ____ GRADING PERMIT APPROVAL
- ____ PAVING PERMIT APPROVAL
- ____ WORK ORDER APPROVAL
- ____ OTHER (SPECIFY)

RECEIVED
APR 22 2010
HYDROLOGY SECTION

WAS A PRE-DESIGN CONFERENCE ATTENDED:
- ____ YES
- X NO
- ____ COPY PROVIDED

DATE SUBMITTED: 4/22/10 BY: Louise Hollesen

Requests for approvals of Site Development Plans and/or Subdivision Plats shall be accompanied by a drainage submittal. The particular nature, location, and scope to the proposed development defines the degree of drainage detail. One or more of the following levels of submittal may be required based on the following:

1. **Conceptual Grading and Drainage Plan:** Required for approval of Site Development Plans greater than five (5) acres and Sector Plans.
2. **Drainage Plans:** Required for building permits, grading permits, paving permits and site plans less than five (5) acres.
3. **Drainage Report:** Required for subdivision containing more than ten (10) lots or constituting five (5) acres or more.

CITY OF ALBUQUERQUE

June 22, 2011

Gilbert Aldaz, P.E.
Applied Engineering, Inc.
1605 Blair Dr NE
Albuquerque, NM 87112

Re: Silver Gardens Apts Ph 2
Grading and Drainage Plan
Engineer's Stamp dated 6-6-11 (K14/D099)

Dear Mr. Aldaz,

Based upon the information provided in your submittal received 6-13-11, the above referenced plan is approved for Building Permit. Please attach a copy of this approved plan to the construction sets prior to sign-off by Hydrology.

This is the plan to certify for release of Certificate of Occupancy.

Prior to Certificate of Occupancy release, Engineer Certification per the DPM checklist will be required.

If you have any questions, you can contact me at 924-3986 or Rudy Rael at 924-3977.

Sincerely,

Curtis A. Cherne, P.E.
Principal Engineer, Planning Dept.
Development and Building Services

C: file

PO Box 1293

Albuquerque

NM 87103

www.cabq.gov

DRAINAGE AND TRANSPORTATION INFORMATION SHEET
(REV. 1/28/2003rd)

PROJECT TITLE: SILVER GARDENS → PHASE II Apartments
ZONE MAP/DRG. FILE #: K-14/D99
DRB #: 1006936 EPC#:
WORK ORDER#:
LEGAL DESCRIPTION: Block 29 Transportation Center
CITY ADDRESS: NE Corner Lead AVE SW AND 2nd Street SW

ENGINEERING FIRM: APPLIED ENGR. & SURVEY, INC
ADDRESS: 1605 Blair Dr. NE
CITY, STATE: Albuquerque, NM
CONTACT: Gilbert Aldaz
PHONE: 480-8125
ZIP CODE: 87112

OWNER:
ADDRESS:
CITY, STATE:
CONTACT:
PHONE:
ZIP CODE:

ARCHITECT: Claudio Vigil Architects
ADDRESS: 1801 Rio Grande Blvd NW
CITY, STATE: Albuq., NM
CONTACT: Louise Hollesen
PHONE: 842-1113
ZIP CODE: 87104

SURVEYOR:
ADDRESS
CITY, STATE:
CONTACT:
PHONE:
ZIP CODE:

CONTRACTOR:
ADDRESS:
CITY, STATE:
CONTACT:
PHONE:
ZIP CODE:

CHECK TYPE OF SUBMITTAL:

- ___ DRAINAGE REPORT
- ___ DRAINAGE PLAN 1st SUBMITTAL, *REQUIRES TCL or equal*
- X DRAINAGE PLAN RESUBMITTAL
- ___ CONCEPTUAL GRADING & DRAINAGE PLAN
- ___ GRADING PLAN
- ___ EROSION CONTROL PLAN
- ___ ENGINEER'S CERTIFICATION (HYDROLOGY)
- ___ CLOMR/LOMR
- ___ TRAFFIC CIRCULATION LAYOUT (TCL)
- ___ ENGINEERS CERTIFICATION (TCL)
- ___ ENGINEERS CERTIFICATION (DRB APPR. SITE PLAN)
- ___ OTHER

CHECK TYPE OF APPROVAL SOUGHT:

- ___ SIA / FINANCIAL GUARANTEE RELEASE
- ___ PRELIMINARY PLAT APPROVAL
- ___ S. DEV. PLAN FOR SUB'D. APPROVAL
- ___ S. DEV. PLAN FOR BLDG. PERMIT APPROVAL
- ___ SECTOR PLAN APPROVAL
- ___ FINAL PLAT APPROVAL
- ___ FOUNDATION PERMIT APPROVAL
- X BUILDING PERMIT APPROVAL
- ___ CERTIFICATE OF OCCUPANCY (PERM.)
- ___ CERTIFICATE OF OCCUPANCY (TEMP.)
- ___ GRADING PERMIT APPROVAL
- ___ PAVING PERMIT APPROVAL
- ___ WORK ORDER APPROVAL
- ___ OTHER (SPECIFY)

RECEIVED
JUN 13 2011
HYDROLOGY SECTION

WAS A PRE-DESIGN CONFERENCE ATTENDED:

- ___ YES
- X NO
- ___ COPY PROVIDED

*Revised Grading in Landscape Area

DATE SUBMITTED: 06-11-11 BY: Gilbert Aldaz

Requests for approvals of Site Development Plans and/or Subdivision Plats shall be accompanied by a drainage submittal. The particular nature, location and scope ot the proposed development defines the degree of drainage detail. One or more of the following levels of submittal may be required based on the following:

1. **Conceptual Grading and Drainage Plan:** Required for approval of Site Development Plans greater than five (5) acres and Sector Plans.
2. **Drainage Plans:** Required for building permits, grading permits, paving permits and site plans less than five (5) acres.
3. **Drainage Report:** Required for subdivisions containing more than ten (10) lots or constituting five (5) acres or more

CITY OF ALBUQUERQUE

August 4, 2010

Gilbert Aldaz, P.E.
Applied Engineering, Inc.
1605 Blair Dr NE
Albuquerque, NM 87112

Re: Silver Gardens Apts Ph 2 Grading and Drainage Plan
Engineer's Stamp dated 7-29-10 (K14/D099)

Dear Mr. Aldaz,

Based upon the information provided in your submittal received 7-30-10, the above referenced plan is approved for Building Permit. Please attach a copy of this approved plan to the construction sets prior to sign-off by Hydrology.

Prior to Certificate of Occupancy release, Engineer Certification per the DPM checklist will be required.

If you have any questions, you can contact me at 924-3695.

Sincerely,

Curtis A. Cherne, P.E.
Senior Engineer, Planning Dept.
Development and Building Services

C: file

PO Box 1293

Albuquerque

NM 87103

www.cabq.gov

Applied Engineering and Surveying, Inc.
Civil Engineering, Land Planning & Surveying

November 10, 2009

Bradley L. Bingham, PE
Principal Engineer, Planning Dept
Development and Building Services
City of Albuquerque
Albuquerque, NM 87103

RE: SILVER GARDENS GRADING AND DRAINAGE PLAN ENGINEER'S STAMP DATED 09-17-08 (K14/D99)

Dear Mr. Bingham:

Attached is a revised plan that addresses your comments received on October 14, 2008 regarding the above referenced plan.

- Additional inverts have been added to the existing storm and sanitary sewer lines. Based on this information the existing sanitary sewer line is below the existing storm drain line, so crossing this should not be an issue. We are also proposing to come about 3.3 feet above the existing invert of the storm drain line in order to insure we have adequate manhole barrel.
- Additional notes indicating that all work in the right-of-way is to be built under a separate work order to include additional labeling for the location of the rights-of-way.

If you should have any additional questions, please do not hesitate to call me since the owner has their building plans in for building permit approval.

Sincerely;

Gilbert Aldaz, P.E., & P.S.

RECEIVED
NOV 10 2008
HYDROLOGY SECTION

RECEIVED
NOV 10 2008
HYDROLOGY SECTION

Gilbert Aldaz, P.E & P.S., 1605 Blair Drive NE, Albuquerque, New Mexico, 87112 (505) 480-8125, Fax (505) 237-8164, E-Mail: galdaz47@yahoo.com