DEVELOPMENT & BUILDING SERVICE CENTER
ONE STOP SHOP
600 SECOND ST. N.W.
ATTENTION: _____
505-924-3900

Records Withdrawal Form

Project No. K-15-DGF **Date:** 4-27-06

Project Title: St Joseph Square

a. File b. Mylars c. Redlines/Comments
d. Other _____

Requested by: David Aube DG **Phone No.:** 463-4503
Name and Company

Comments: Academy repro to pick up and return

Anticipated Return Date: 5-2-06.

I hereby accept full responsibility for the security of the above noted records/plans until return receipt acknowledgement is completed. Records/plans will be returned to the Development and Building Services Center on or before the indicted anticipated return date.

Delivery Picked Up By:

Name: JUSTIN JONES **Organization:** ACADEMY REPRO
Print

Signed: [signature] **Date:** 4/27/06

Office Use Only

Return Acknowledged:

Received By: _____ **Date:** 4/27/06
Print

GENERAL DESIGN ELEMENTS (TRACT 2 1 (CONT)

LANDSCAPING
NEW LANDSCAPING SHALL INCLUDE PLANT SPECIES COMPATIBLE WITH THOSE EXISTING ON THE ST. JOSEPH MEDICAL CAMPUS. SHADE TREES SHALL BE LOCATED ADJACENT TO THE STREETS AND PEDESTRIAN WALKS AND WITHIN NEW AT GRADE PARKING AREAS. SHADE TREES AND LOWER HEIGHT LANDSCAPING WITHIN PARKING BLANKS, AT BUILDING FOUNDERS AND AT AREAS OF NEW SITE CONSTRUCTION WHICH ABUT EXISTING SITE CONDITIONS.

LIGHTING
OVERALL SITE LIGHTING SHALL BE CONSISTENT WITH THE TYPE, CHARACTER, COLOR OF EXISTING SITE LIGHTING ON THE ST. JOSEPH MEDICAL CAMPUS. PARKING AREA LIGHTING SHALL CONSIST OF 30' POST TOP POLE MOUNTED FIXTURES. PEDESTRIAN WALKWAY LIGHTING SHALL BE A MINIMUM OF .25 FOOT CANDLES, AND SHALL BE COORDINATED WITH EXISTING AND PROPOSED PARKING AREA LIGHTING. NEW BUILDING ENTRANCES SHALL BE ACCURATELY ILLUMINATED FOR EASE OF ACCESS.

PEDESTRIAN ACCESS
A CLEAR PEDESTRIAN WALK SHALL CONNECT ALL NEW AND EXISTING BUILDINGS. A PORTION OF THE WALKED NORTHWEST AND THE NEW BRICK DEDICATED VALET FOR PEDESTRIAN ACCESS BETWEEN THE NEW PARKING STRUCTURE AND THE ST. JOSEPH MEMORIAL CAMPUS. PEDESTRIAN ROUTES SHALL INCLUDE 6'-0" WIDE SIDEWALKS WITH APPROPRIATE LEVELING AND ADJACENT SHADE TREES. CROSSING SHALL BE LOCATED AT EACH NEW BUILDING ENTRY. CROSSWALKS WITH PAVERS OR SCORED PAVING SHALL BE INSTALLED ALONG ALL NEW AND EXISTING PEDESTRIAN CROSSINGS OF STREETS AND DRIVE AISLES WITHIN ST. JOSEPH MEDICAL CAMPUS AND SHALL BE CLEARLY DESIGNATED.

SIGNAGE
MUCH OF THE EXISTING SIGNAGE SIGNAGE IS OF THE INTERNALLY ILLUMINATED MONUMENT SIGN TYPE. NEW SIGNAGE SHALL BE INTERNALLY ILLUMINATED MONUMENT SIGN TYPE SIGNAGE LOCATED AT EXIT PARKING AREA BARRICADES. BUILDING SIGNAGE SHALL BE NON ILLUMINATED & LIMITED TO AREA SHOWN ON ELEVATIONS FOR TRACT 2B1

BUILDING CHARACTER
NEW BUILDINGS SHALL BE CONSISTENT WITH THE CHARACTER OF THE ST. JOSEPH SQUARE VENTURE AND THE ST. JOSEPH REHABILITATION HOSPITAL BUILDINGS. DARKER BRICK BASED ACCORDING BUILDING DIMENSIONS IS STRONGLY ENCOURAGED AND SHALL ACCOUNT FIRST FOR AREAS, WITH LARGER PANELS SPACED AND SYMETRIC FRONT SYSTEMS INCLUDING UPPER BUILDING LEVELS. BLUE TINTED WINDOWS SHALL FURTHER ACCENT DIVERSITY. VERTICAL ELEVATORS TO CREATE A MODERN TRANSITION BETWEEN PAST AND MODERN TRADITIONAL DESIGN ELEMENTS OF NEW MEXICO.

SEE PLAN FOR BUILDING PERMIT CONDITION #1d

PARKING INFORMATION

SEE PLAN FOR BUILDING PERMIT CONDITION #1

HEART HOSPITAL PARKING CALCULATIONS (TRACT 2B2)

PARKING SPACES ON THE MAINLINE	38
CONVERTED CONFERENCE SPACES	125

HEART INSTITUTE OFFICE BUILDING (TRACT 2B1) PARKING REQUIREMENTS

OFFICES
CITY ZONING CODE PART 2, SECTION 14-16-3-1, PARAGRAPH A(1)

FIRST FLOOR: 6,150 GSF x .86 = 5,073.6 NSF/200 =	26
SECOND FLOOR: 15,800 GSF x .85 = 13,380 NSF/200 =	66
THIRD FLOOR: 14,800 GSF x .86 = 12,580 NSF/200 =	62
PARKING SPACES REQUIRED	152
SDC ALLOWANCE TRANSIT SYSTEM REDUCTION	168
TOTAL PARKING SPACES REQUIRED (INCLUDING 8 ACCESSIBLE WITH 1 VAN ACCESSIBLE)	184
TOTAL PARKING SPACES PROVIDED: (183 + 83) (INCLUDING 6 ACCESSIBLE, MIN 4 VAN ACCESSIBLE)	266
COMPACT SPACES ALLOWED: 266 x 25%	66
COMPACT SPACES PROVIDED:	45

ALL COMPACT PARKING SPACES WILL BE 8'-6"W x 20'-0"L MIN.

BICYCLE PARKING REQUIREMENTS
TOTAL BICYCLE SPACES REQUIRED: 181/20 = 5
TOTAL BICYCLE SPACES PROVIDED: 5

SEE PLAN FOR BUILDING PERMIT CONDITION #1

PARKING & ACCESS EASEMENT (TRACT 2B2)
PARKING PARCEL AND DRIVE AISLES (DARKER BORDER) ... (DRIVE AISLES) AND (HEART HOSPITAL BUILDING) SHALL BE CONTAINED IN PLAT

SITE INFORMATION

SEE PLAN FOR BUILDING PERMIT CONDITION #1

HEART HOSPITAL SITE CALCULATIONS (TRACT 2B2)

TOTAL SITE AREA	12,329
TOTAL SITE SQUARE PORTAGE	270,449.4 SF (4.9 ACRES)
FAR	.27

HEART INSTITUTE MEDICAL OFFICE BUILDING (TRACT 2B1)

TOTAL BUILDING SUMMER FOOTAGE	36,550
TOTAL SITE SQUARE PORTAGE	101,285.5 SF (2.32 ACRES)
FAR	.36
PARKING DECK SUMMER FOOTAGE	8,765

SITE LIGHTING
PEDESTRIAN WALKWAY LIGHTING SHALL BE A MINIMUM OF .25 FOOTCANDLES AND SHALL BE COORDINATED WITH EXISTING & PROPOSED PARKING AREA LIGHTING.

LANDSCAPING
NONE IN SECT 7 OF THE BUENOS FIRE ARROYO, MONUMENT AND ENGINE LANDSCAPE CONTAINER

LEGEND

EXISTING PROPERTY LINES
PROPOSED PROPERTY LINE

VICINITY MAP

CASE NUMBER: 1000596

02-DRB - 00535 02EPC - 00141

THIS SITE DEVELOPMENT PLAN IS CONSISTENT WITH THE PLAN APPROVED AT THE March 22 2002 ENVIRONMENTAL PLANNING COMMISSION HEARING.

TRAFFIC ENGINEER, TRANSPORTATION DIVISION — 7-17-02
CITY ENGINEER/AMAFCA — 6/26/02
PUBLIC WORKS, UTILITY DIVISION — 6/26/02
DEVELOPMENT DEPARTMENT, CIP — 6/26/02
PARKS AND RECREATION — 7/25/02
CITY PLANNER, PLANNING DIVISION — 7/24/02

REFUSE ENCLOSURE, AS PER CITY OF ALBUQUERQUE STANDARDS. COORD. WITH SOLID WASTE DEPARTMENT FOR PREPOUR INSPECTION.

AFD PLANS CHECKING OFFICE
924-3611
APPROVED/DISAPPROVED
HYDRANT(S) ONLY
SIGNATURE & DATE 6/28/02

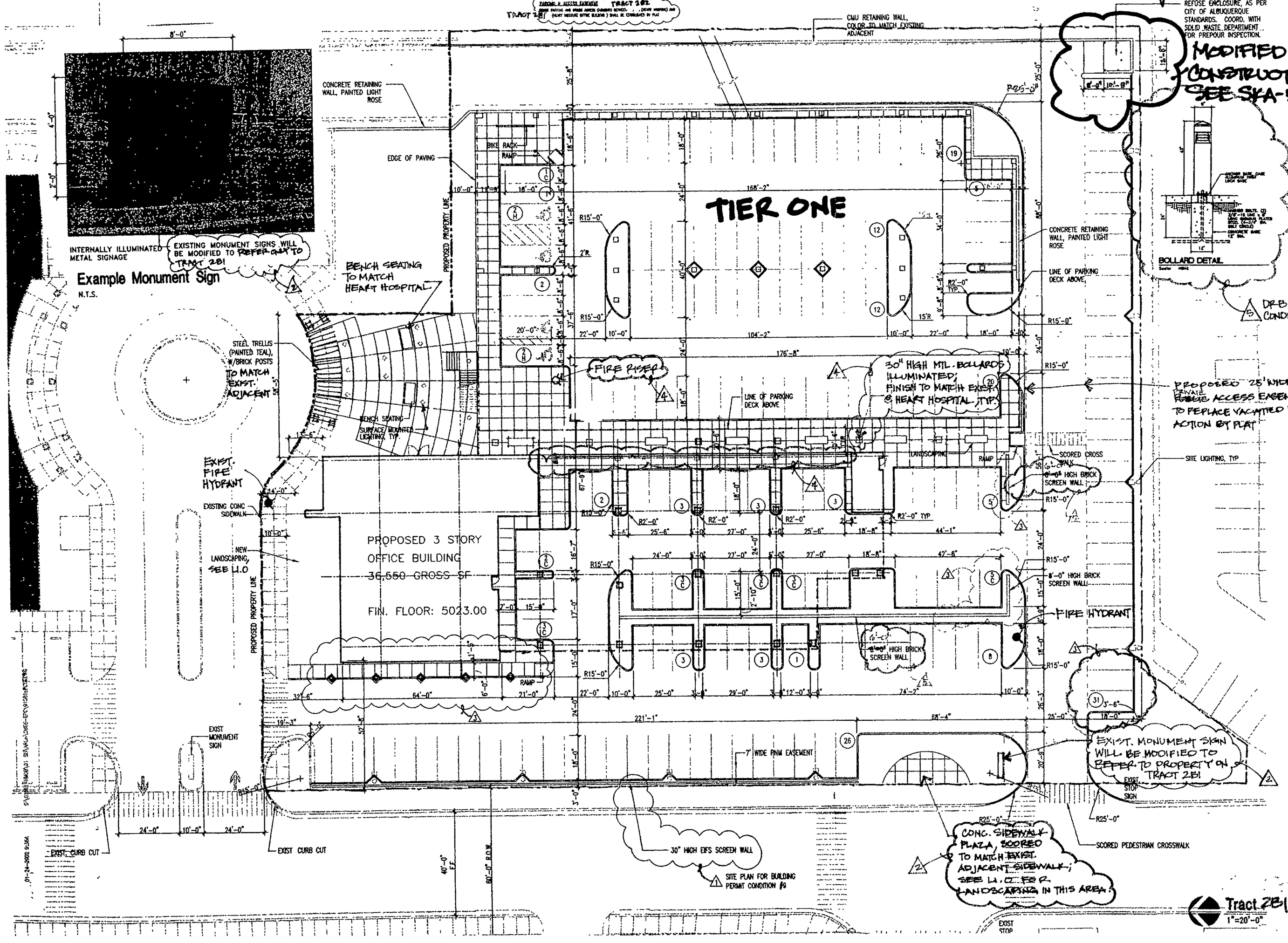

INTERNALLY ILLUMINATED METAL SIGNAGE

EXISTING MONUMENT SIGNS WILL BE MODIFIED TO REFER ONLY TO TRACT 2B1

Example Monument Sign
N.T.S.

BOLLARD DETAIL

DRB CONDITION

Refuse Enclosure Elevation
3/8"=1'-0" < X-02DUMP3 DWG >

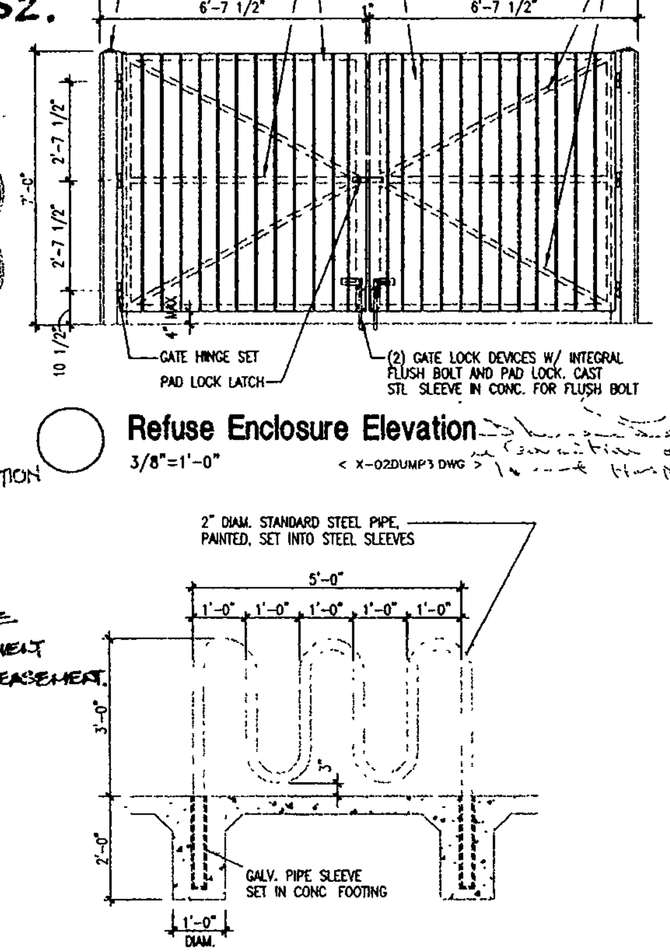

Section Detail
1/2"=1'-0" < 02BIKE01 DWG >

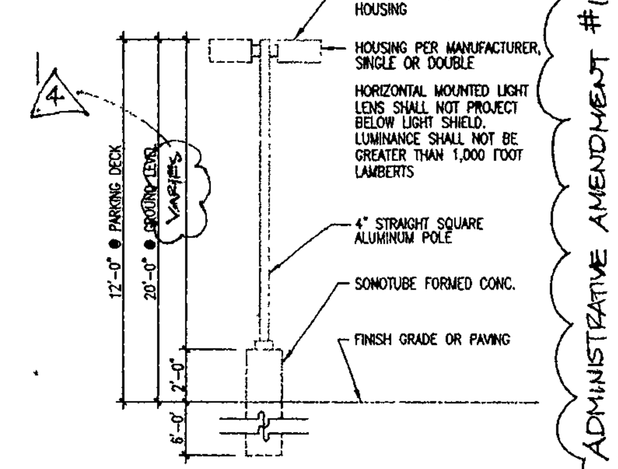

Light Pole Elevation
1/4"=1'-0" < X-LIGHT.DWG >

ADMINISTRATIVE AMENDMENT #1 DATED 7-31-02, SHEETS A301 & A302. VARIOUS CHANGES WINDOW OPENINGS AND PARKING DECK OPENINGS.

Tract 2B1 Site Development Plan for Building Permit
1"=20'-0"

architect interi plann engineer
Dekker Perich Sabatini
6801 Jefferson NE
Suite 100
Albuquerque, NM 87
505 761-9700
fax 761-4222
dps@dpsabq.com

DRB Submittal
JUNE 20, 2002

architect
engineer
project

Heart Institute Medical Office Building
Albuquerque, NM 87102

revisions
1 4-9-02 EPC FINDINGS AND CON 3-22-02
2 6-19-02 NEIGHBORHOOD ASSOC.
3 6-19-02 DRB REVIEW COMMENTS 6-26-02 ARCHITECT
4 REVISION TO EPC. APPR DRAWINGS
5 12-2-02 ADMINISTR AMENDMENT

plotted: 01-24-2002 8:30A
S:\01001-PROJ\01 SOJ\ARCH\DWGS-EPC\01

drawn by
reviewed by
date 6-26-02
project no. 1000596
drawing name
Tract 2B1 Site Development Pl for Building Permit

sheet no.
A3
2 of

GENERAL DESIGN ELEMENTS (TRACT 281 ONLY)

LANDSCAPING
NEW LANDSCAPING SHALL INCLUDE PLANT SPECIES COMMONLY KNOWN THOSE EXISTING ON THE ST. JOSEPH MEDICAL CAMPUS. SHADE TREES SHALL BE LOCATED ADJACENT TO THE STREET AND PEDESTRIAN ROUTE AND NEAR NEW AT GRADE PARKING AREAS. SHADE TREES AND LOWER PERIMET LANDSCAPING WITHIN PARKING ISLANDS, AT BUILDING PERIMETERS AND AT AREAS OF NEW SITE CONSTRUCTION WHICH ABUT EXISTING SITE CONSTRUCTION.

LIGHTING
EXTERIOR SITE LIGHTING SHALL BE INCORPORATED WITH THE TYPE, CHARACTER, COLOR OF EXISTING SITE LIGHTING ON THE ST JOSEPH MEDICAL CAMPUS. PARKING AREA LIGHTING SHALL CONSIST OF 30' FOOT HIGH POLE MOUNTED FIXTURES. PEDESTRIAN BULKHEAD LIGHTING SHALL BE A MINIMUM OF 25 FOOT CANDLES, AND SHALL BE COORDINATED WITH EXISTING AND PROPOSED PARKING AREA LIGHTING. NEW BUILDING BRACKETS SHALL BE ACCURATELY ILLUMINATED FOR SAME OF ACCESS.

PEDESTRIAN ACCESS
A CLEAR PEDESTRIAN ROUTE SHALL CONNECT ALL NEW AND EXISTING FACILITIES. A PORTION OF THE WICKED UNIMPACTED AREA, THE BEGIN DEDICATED SOLELY FOR PEDESTRIAN ACCESS BETWEEN THE NEW PARKING STRUCTURE AND THE ST JOSEPH MEDICAL CENTER. PEDESTRIAN ROUTES SHALL INCLUDE 6'-0" WIDE SIDEWALKS WITH ADEQUATE ANCHOR BETWEEN THE NEW PARKING STRUCTURE AND THE ST JOSEPH MEDICAL CENTER. PEDESTRIAN ROUTES SHALL INCLUDE 6'-0" WIDE SIDEWALKS WITH ADEQUATE LIGHTING AND ADJACENT SHADE TREES. SEATING SHALL BE LOCATED AT EACH NEW BUILDING ENTRY. CROSSWALKS WITH PAVERS OR SCORED PAVING SHALL BE INSTALLED ALONG ALL NEW AND EXISTING PEDESTRIAN CROSSINGS OF STREETS AND DRIVE AISLES NEARBY ST. JOSEPH MEDICAL CAMPUS AND SHALL BE CLEARLY SIGNAGE.

SIGNAGE
MUCH OF THE EXISTING CAMPUS SIGNAGE IS OF THE INTERNALLY ILLUMINATED MONUMENT SIGN TYPE. NEW SITE SIGNAGE SHALL BE INTERNALLY ILLUMINATED MONUMENT SIGN TYPE SIGNAGE LOCATED AT KEY POINTS ALL ENTRANCES. ~~SIGNAGE SHALL BE DESIGNED TO REFLECT THE CHARACTER OF THE NEW BUILDING ELEVATIONS.~~ BUILDING SIGNAGE SHALL BE NON ILLUMINATED AND LIMITED TO AREA SHOWN ON ELEVATIONS

BUILDING CHARACTER
NEW BUILDINGS SHALL BE CONSISTENT WITH THE CHARACTER OF THE ST JOSEPH SQUARE MEDICAL AND THE ST JOSEPH REHABILITATION HOSPITAL BUILDINGS. DARKER BRICK TONES ACCENTING BUILDING ENTRANCES TO STRONGLY ENCOURAGING AND SHALL ACCENT FIRST FOR AREAS, WITH EARTH TONED STUCCO AND SYNTHETIC PATCH EXISTING BEARING UPPER BUILDING LEVELS. BLUE TONED TRELLISES SHALL FURTHER ACCENT ENTRANCE & VERTICAL ELEMENTS TO CREATE A SMOOTH TRANSITION BETWEEN ENTRY & SKY AND MEDIAL TRADITIONAL DESIGN ELEMENTS OF NEW MEXICO.

SEE PLAN FOR SUBDIVISION REVIEW PLA

VICINITY MAP

SITE INFORMATION

SEE PLAN FOR SUBDIVISION REVIEW PL

NEAR MEDICAL SITE CALCULATIONS (TRACT 281)

TOTAL PARCEL SQUARE FOOTAGE	57,328
TOTAL SITE SQUARE FOOTAGE 243,494 SF (± 5.6 ACRES)	
FAR	.27

NEAR METROPOLITAN MEDICAL OFFICE BUILDING (TRACT 2-01)

TOTAL BUILDING SQUARE FOOTAGE	36,550
TOTAL SITE SQUARE FOOTAGE 101,285 S.F. (± 2.32 ACRES)	
FAR	.36
PARKING DECK SQUARE FOOTAGE	28,795

SITE LIGHTING
PEDESTRIAN WALKWAY LIGHTING SHALL BE A MINIMUM OF .25 FOOTCANDLES AND SHALL BE COORDINATED WITH EXISTING AND PROPOSED PARKING AREA LIGHTING.

LANDSCAPING
REFER TO SHEET 7 OF THIS SUBMITTAL FOR ADDITIONAL INFORMATION ON EXISTING LANDSCAPING CONDITIONS

LEGEND

EXISTING PROPERTY LINES

PROPOSED PROPERTY LINE

PARKING INFORMATION

SEE PLAN FOR SUBDIVISION REVIEW PL

NEAR HOSPITAL PARKING CALCULATIONS (TRACT 2-02)

PARKING SPACES (NO NEW PARKING)	30
CONFIRMED EXISTING SPACES	155

NEAR METROPOLITAN OFFICE BUILDING (TRACT 2-01) (PARKING REQUIREMENTS)

OFFICES
(CITY ZONING CODE PART 3, SECTION 14-16-3-1, PARAGRAPH A21)

FIRST FLOOR: 6,550 GSF x .85 = 5,5717.5 HSF/200 =	28
SECOND FLOOR: 15,800 GSF x .85 = 13,280 HSF/200 =	66
THIRD FLOOR: 14,800 GSF x .85 = 12580 HSF/200 =	62
PARKING SPACES REQUIRED	112
NMI ALBUQUERQUE TRANSIT SYSTEM REDUCTION	10%
TOTAL PARKING SPACES REQUIRED (INCLUDING 8 ACCESSIBLE, WITH 1 VAN ACCESSIBLE)	101

SEE PLAN FOR BUILDING PERMIT REVIEW PL

TOTAL PARKING SPACES PROVIDED (183 + 63) (INCLUDING 8 ACCESSIBLE, WITH 4 VAN ACCESSIBLE)	246
COMPACT SPACES ALLOWED 246 x 25%	96
COMPACT SPACES PROVIDED	45

ALL COMPACT PARKING SPACES WILL BE 8'-0"W x 20'-0"L MIN.
(FOR TRACT 281)

BICYCLE PARKING REQUIREMENTS
TOTAL BICYCLE SPACES REQUIRED 101/20 = 5
TOTAL BICYCLE SPACES PROVIDED 5

SEE PLAN FOR SUBDIVISION REVIEW PLA

PARKING & ACCESS EASEMENT TRACT 2-01
NEGRO PARKING AND BRIDGE ACCESS EASEMENTS BETWEEN TRACT 2-01 (NEAR HOSPITAL) AND TRACT 281 (NEAR MEDICAL OFFICE BUILDING) SHALL BE DEFINED ON PLAT.

CASE NUMBER:

THIS SITE DEVELOPMENT PLAN IS CONSISTENT WITH THE PLAN APPROVED AT THE _____ 2002 ENVIRONMENTAL PLANNING COMMISSION HEARING

TRAFFIC ENGINEER, TRANSPORTATION DIVISION

CITY ENGINEER/AMAFCA

PUBLIC WORKS, UTILITY DIVISION

DESIGN AND DEVELOPMENT DEPARTMENT, CIP

CITY PLANNER, PLANNING DIVISION

architecture
interior
planning
engineering

Dekker
Perich
Sabatini

6801 Jefferson NE
Suite 100
Albuquerque, NM 8710

505 761-9700
fax 761-4222
dps@dpsabq.com

architect

engineer

DRB Submittal

JUNE 26, 2002.

project

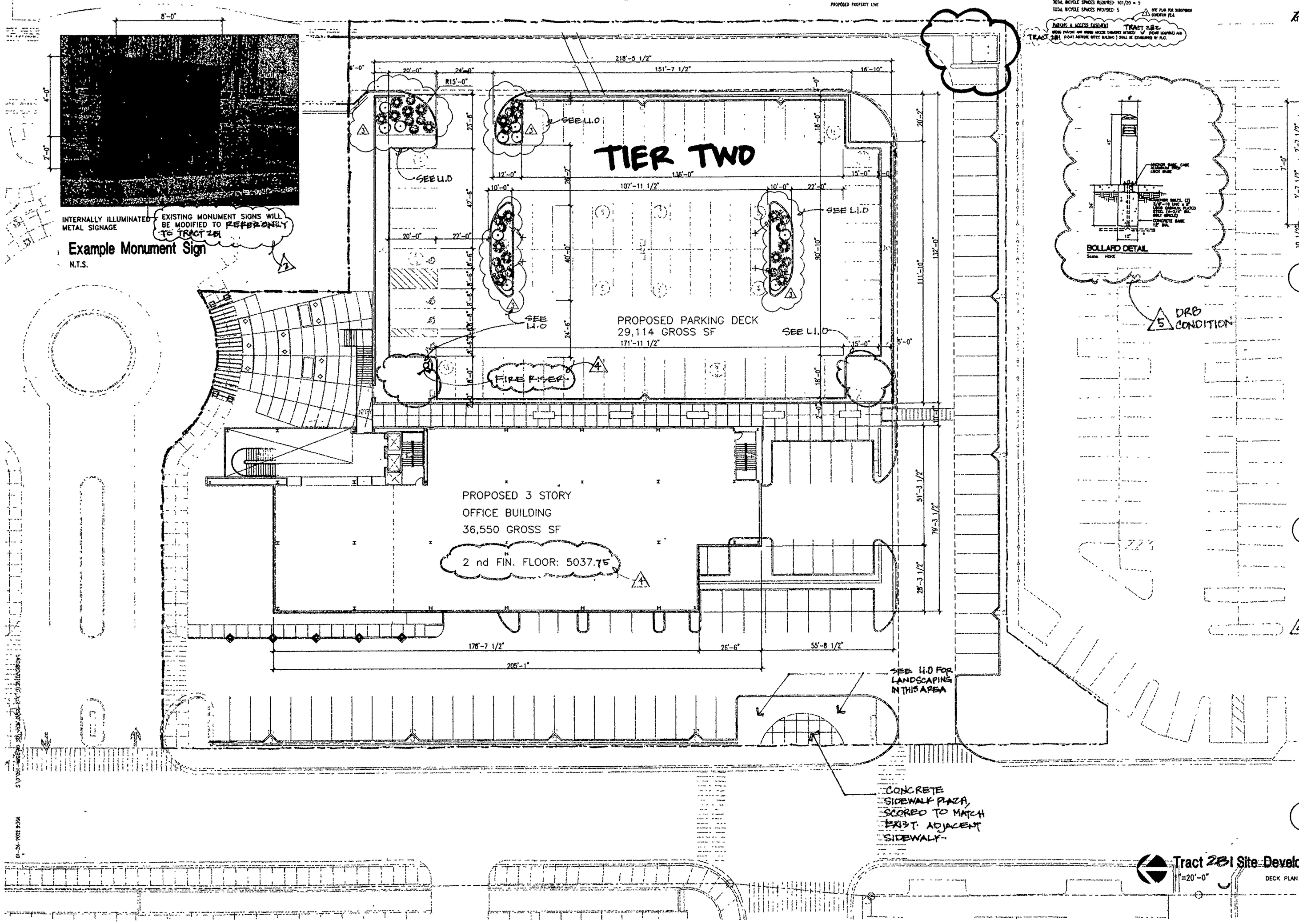

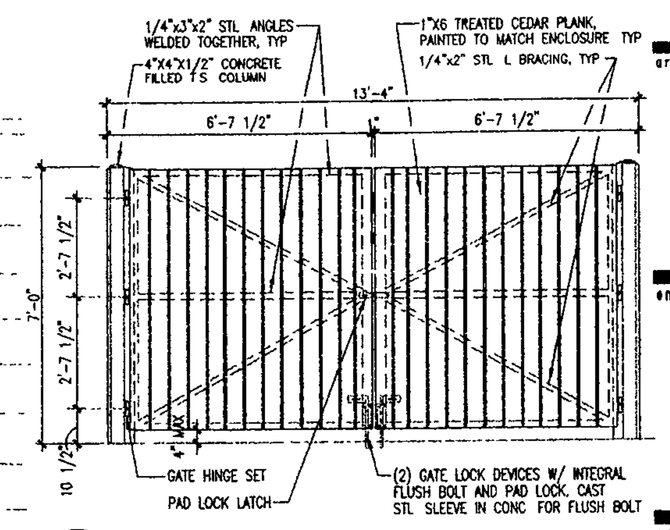

Refuse Enclosure Elevation
3/8"=1'-0" < X-02DUMP3.DWG >

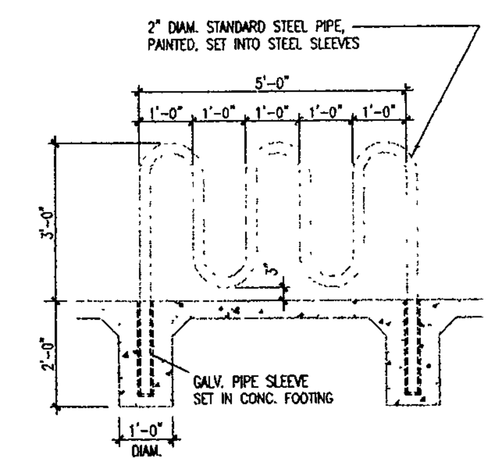

Section Detail
1/2"=1'-0" < 02BIKEO1.DWG >

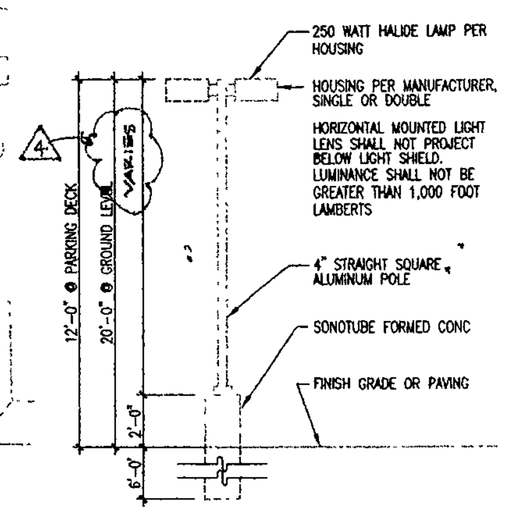

Light Pole Elevation
1/4"=1'-0" < X-LIGHT DWG >

Tract 281 Site Development Plan for Building Permit
1"=20'-0" DECK PLAN
0 5' 10' 20'

Heart Institute
Medical Office Building
Albuquerque, NM 87102

revisions
1 6-19-02 NEIGHBORHOOD ASSOC COM
2 6-25-02 ARCHITECTURAL REVISION TO EPC APPROVED FRAM
3
4

plotted: 01-24-2002 9:36A
S:\01081-HMOB\01 SD\ARCH\DWGS-EPC\01081E

drawn by

reviewed by

date 6-26-02

project no. #100596

drawing name

Tract 281
Site Development Plan
for Building Permit

sheet no.

A4

3 of 4

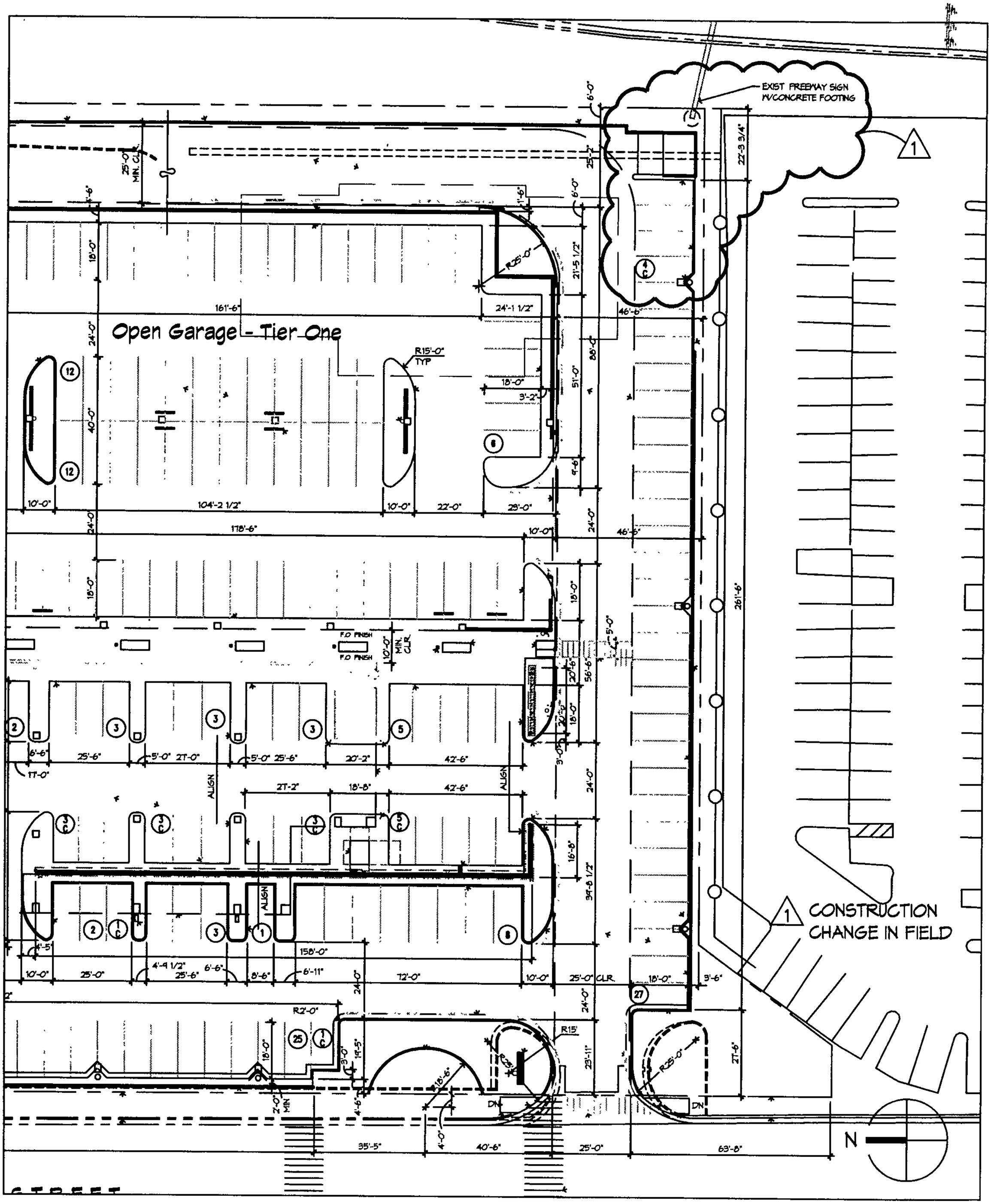

S:\01081-HIMOB\DrawingsArch\01081_A001.dwg, 07/10/2003 10:59:32 AM, curtis

architecture
interiors
planning
engineering

Dekker/Perich/Sabatini

6801 Jefferson NE
Suite 100
Albuquerque, NM 87109

505 761-9700
fax 761-4222
dps@dpsabq.com

TRAFFIC CIRCULATION LAYOUT

H.I.M.O.B.

502 ELM STREET NE
ALBUQUERQUE, NM 87109

REVISED PARKING LAYOUT

DRAWN BY	DPS	SCALE	NTS
REVIEWED BY	DPS		
DATE ISSUED	7-11-03	SKA-052	
PROJECT NO.	01081	1 NO.	1

332 MURIEL NE, ALBUQUERQUE, NM 87123
PH. (505) 296-7529 FAX. (505) 292-6190
NM Licenses #25282
www.accustripe.com

ACCUSTRIPE, INC

01081
G/COR
7/9/03

Fax and E-Mail

To: Marty Hibbs **From:** DAN MARTINEZ

CC: Curtis Proctor 761-4222

Fax: ~~842-5410~~ 243-9678 **Pages:** 4

Phone: 980-0750 **Date:** 7/9/2003

Re: Heart Institute Medical Office **Job #:** 21636

☐ **Urgent** x **For Review** ☐ **Please Comment** ☐ **Please Reply** ☐ **Please Recycle**

Dear Marty:

This letter is in response to the handicap installation on the ground floor of the parking garage on the above referenced project. I have spoken to Curtis Proctor with Dekker Perich and have explained to him the purpose of our installation at this height. He has asked me to respond back to you and I will fax a copy to him as well.

Please note that our submittal on all signs, including handicapped signs call for mounting height to be 7 ft from the bottom of the sign. This in accordance with the following guidelines:

1. ANSI sec. 4.6.2, "such signs shall not be obscured by a vehicle parked in the space."

* 2. Manual of Uniform Traffic Control Devices (MUTCD), "where parking or pedestrian movements occur, the clearance to the bottom of the sign shall be at least 7 ft. (document attached)

3. Americans with Disabilities (ADA) Guidelines—"A sign with the international symbol of accessibility must be located in front of the parking space and mounted high enough so it is not hidden by a vehicle parked in the space." (document attached)

The 7 ft height far exceeds contract drawing details and city requirement, and we recommend this height to eliminate pedestrians cutting themselves on the signs as has been the case in the past. If the lower heights are required, we request a release of liability in case of accidents.

Sincerely,

Dan Martinez
President

ACCUSTRIPE, INC.

Specializing in Parking Lot Striping
332 Muriel N.E.
Albuquerque, NM 87123
(505) 296-7529
FAX (505) 292-6190

Sign Installation: per Manual on Uniform Traffic Control Devices (MUTCD 2000)

ROADSIDE SIGN
RURAL DISTRICT

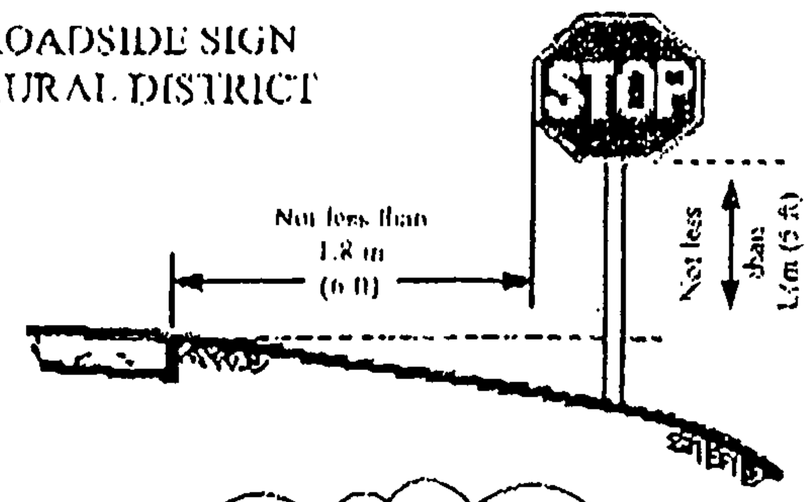

ROADSIDE SIGN
RURAL DISTRICT

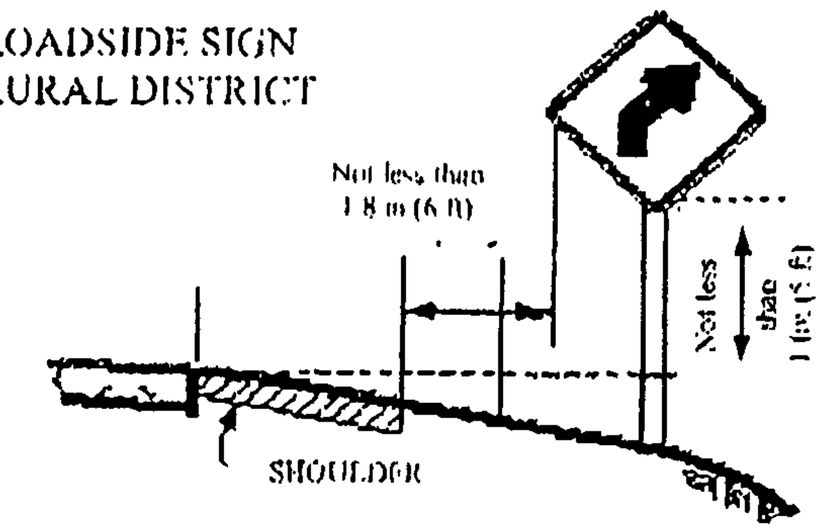

ROADSIDE SIGN
BUSINESS OR
RESIDENCE DISTRICT

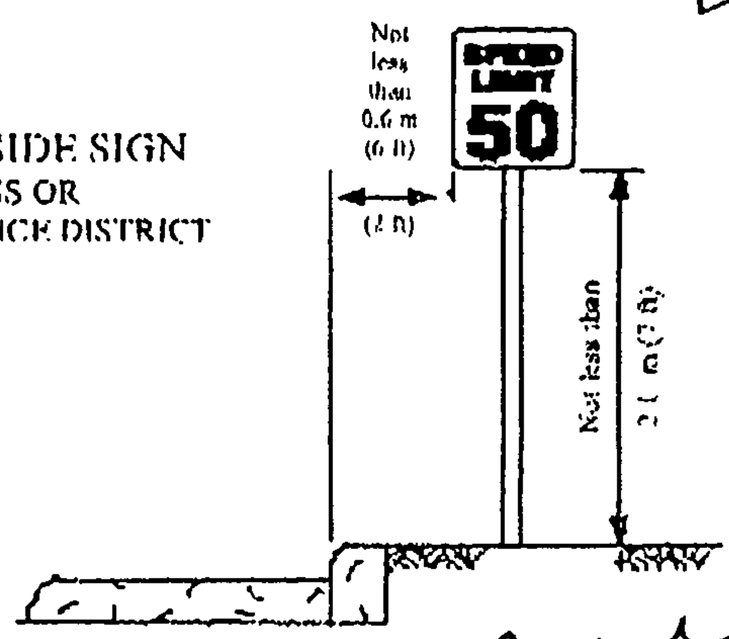

WARNING SIGN
WITH ADVISORY
SPEED PLAQUE
RURAL DISTRICT

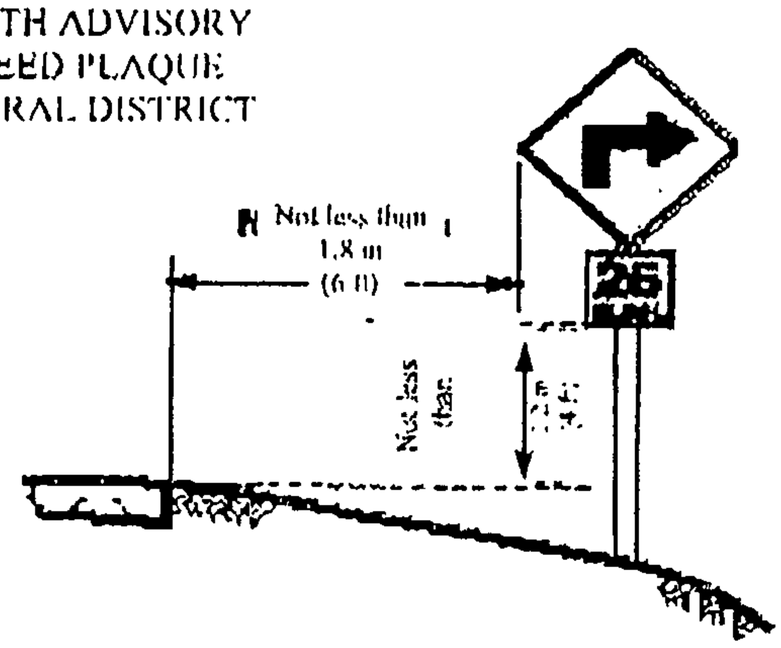

<u>Section 2A.18 Mounting Height</u>
<u>Standard:</u>

Signs installed at the side of the road in rural districts shall be at least 1.5 m (5 ft), measured from the bottom of the sign to the near edge of the pavement. <u>Where parking or pedestrian movements occur, the clearance to the bottom of the sign shall be at least 2.1 m (7 ft).</u>

Directional signs on expressways and freeways shall be installed with a minimum height of 2.1 m (7 ft). If a secondary sign is mounted below another sign, the major sign shall be installed at least 2.4 m (8 ft) and the secondary sign at least 1.5 m (5 ft) above the level of the pavement edge. All route signs, warning signs, and regulatory signs on expressways and freeways shall be at least 2.1 m (7 ft) above the level of the pavement edge.

Overhead signs shall provide a vertical clearance of not less than 5.1 m (17 ft) to the sign, light fixture, or sign bridge, over the entire width of the pavement and shoulders except where a lesser vertical clearance is used for the design of other structures. The vertical clearance to overhead sign structures or supports shall not be greater than 0.3 m (1 ft) in excess of the minimum clearance of other structures.

Accessible Parking

When parking is provided for the public, designated accessible parking spaces must be provided, if doing so is readily achievable. An accessible parking space must have space for the vehicle and an additional space located either to the right or to the left of the space that serves as an access aisle. This aisle is needed to permit a person using a wheelchair, electric scooter, or other mobility device to get out of their car or van. A sign with the international symbol of accessibility must be located in front of the parking space and mounted high enough so it is not hidden by a vehicle parked in the space.

Accessible parking spaces should be the spaces closest to the accessible entrance and be located on level ground. If it is not readily achievable to locate accessible parking in the closest spaces due to sloped pavement or other existing conditions, then the closest level area should be selected. An accessible route must be provided between the access aisle and the accessible building entrance. This route must have no steps or steeply sloped surfaces and it must have a firm, stable, slip-resistant surface.

Van accessible spaces must have an access aisle that is **at least eight-feet wide** and be designated by a sign with the international symbol and "van accessible." There should be a vertical clearance of at least 98 inches on the vehicular route to the space, at the parking space, and along the vehicular route to an exit.

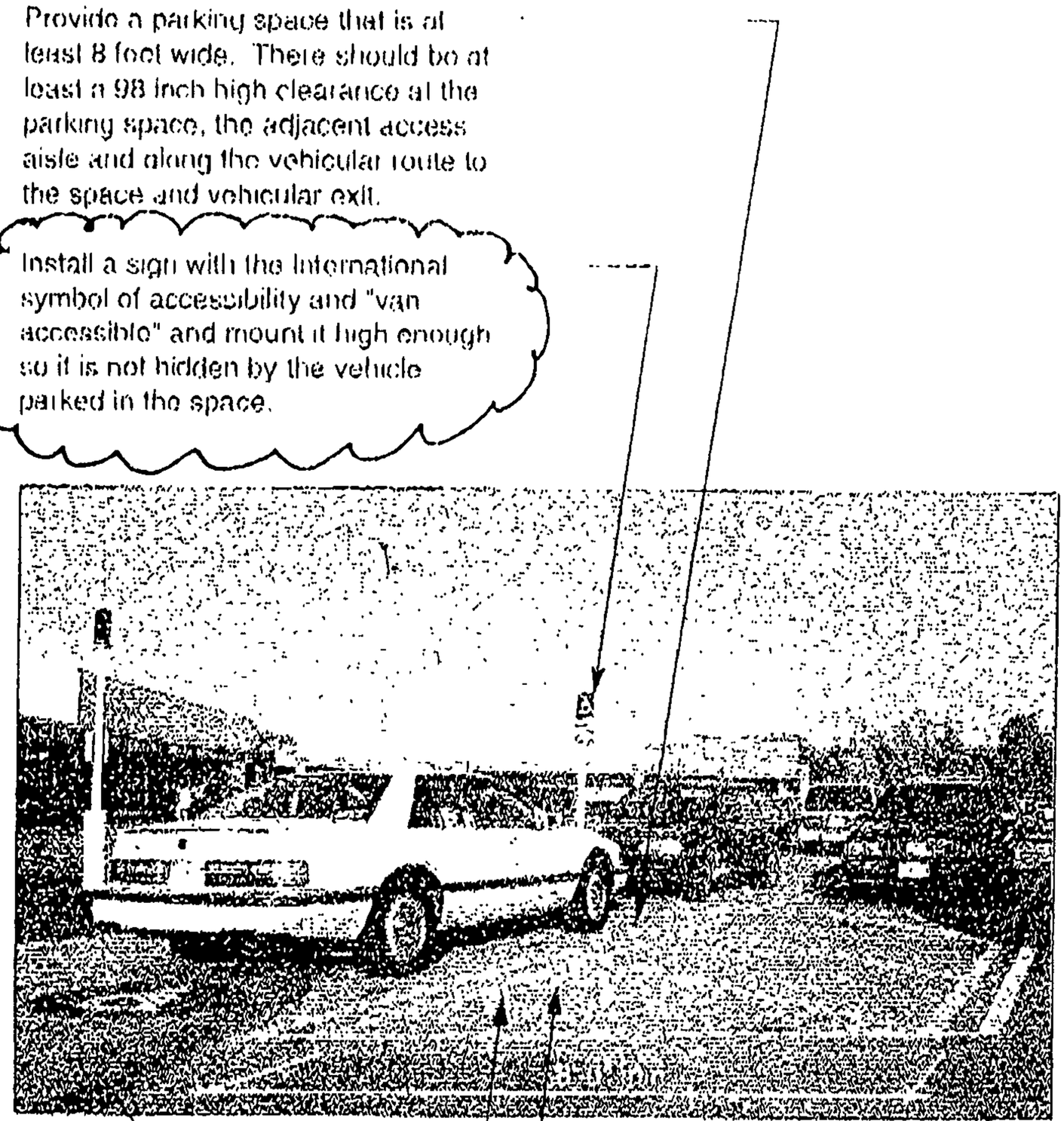

A Van Accessible Parking Space

(1 of 8 of all accessible parking spaces, but at least one, must be van accessible
Although designated a van accessible space, cars may use the space too.)

DRAINAGE AND TRANSPORTATION INFORMATION SHEET

(REV. 1/28/2003rd)

K-15/D6F

PROJECT TITLE: HEART INSTITUTE MEDICAL OFFICE BUILDING ZONE MAP/DRG. FILE #: ~~K-15~~
DRB #: 02DRB-00533 EPC#: 02EPC 00140 WORK ORDER#:

LEGAL DESCRIPTION: TRACT 2B1 ST. JOSEPHS MEDICAL CAMPUS
CITY ADDRESS: 502 ELM ST NE 87102

ENGINEERING FIRM: CONTACT:
ADDRESS: PHONE:
CITY, STATE: ZIP CODE:

OWNER: HEART OFFICE LLC CONTACT: JACK WESTMAN
ADDRESS: 4600B MONTGOMERY BLVD STE 103 PHONE: 883-5221
CITY, STATE: ALBUQUERQUE, NM 87109 ZIP CODE:

ARCHITECT: DEKKER PERICH SABATINI CONTACT: CURTIS PROCTOR
ADDRESS: 6801 JEFFERSON BLVD #100 PHONE: 761-9700
CITY, STATE: ALBUQUERQUE, NM ZIP CODE: 87109

SURVEYOR: CONTACT:
ADDRESS PHONE:
CITY, STATE: ZIP CODE:

CONTRACTOR: BRADBURY STAMM CONSTRUCTION CONTACT: MARTY HIBBS
ADDRESS: 3701 PASEO DEL NORTE PHONE: 765-1200
CITY, STATE: ALBUQUERQUE, NM ZIP CODE: 87184

CHECK TYPE OF SUBMITTAL:

____ DRAINAGE REPORT
____ DRAINAGE PLAN 1st SUBMITTAL, ***REQUIRES TCL or equal***
____ DRAINAGE PLAN RESUBMITTAL
____ CONCEPTUAL GRADING & DRAINAGE PLAN
____ GRADING PLAN
____ EROSION CONTROL PLAN
____ ENGINEER'S CERTIFICATION (HYDROLOGY)
____ CLOMR/LOMR
X TRAFFIC CIRCULATION LAYOUT (TCL)
____ ENGINEERS CERTIFICATION (TCL)
____ ENGINEERS CERTIFICATION (DRB APPR. SITE PLAN)
____ OTHER

CHECK TYPE OF APPROVAL SOUGHT:

____ SIA / FINANCIAL GUARANTEE RELEASE
____ PRELIMINARY PLAT APPROVAL
____ S. DEV. PLAN FOR SUB'D. APPROVAL
____ S. DEV. PLAN FOR BLDG. PERMIT APPROVAL
____ SECTOR PLAN APPROVAL
____ FINAL PLAT APPROVAL
____ FOUNDATION PERMIT APPROVAL
____ BUILDING PERMIT APPROVAL
X CERTIFICATE OF OCCUPANCY (PERM.)
____ CERTIFICATE OF OCCUPANCY (TEMP.)
____ GRADING PERMIT APPROVAL
____ PAVING PERMIT APPROVAL
____ WORK ORDER APPROVAL
____ OTHER (SPECIFY)

WAS A PRE-DESIGN CONFERENCE ATTENDED:
____ YES
X NO
____ COPY PROVIDED

RECEIVED
JUL 18 2003
HYDROLOGY SECTION

DATE SUBMITTED: BY:

Requests for approvals of Site Development Plans and/or Subdivision Plats shall be accompanied by a drainage submittal. The particular nature , location and scope ot the proposed development defines the degree of drainage detail. One or more of the following levels of submittal may be required based on the following:

1. **Conceptual Grading and Drainage Plan**: Required for approval of Site Development Plans greater than five (5) acres and Sector Plans.
2. **Drainage Plans**: Required for building permits, grading permits, paving permits and site plans less than five (5) acres.
3. **Drainage Report**: Required for subdivisions containing more than ten (10) lots or constituting five (5) acres or more.

Dekker/Perich/Sabatini
architecture
interiors
planning
engineering

July 18, 2003

Mr. Richard Dourte
City of Albuquerque
Public Works Department - Transportation Development Services Section
Albuquerque, New Mexico 87103

Re: Architect's Certification for Permanent C.O.
Heart Institute Medical Office Building
502 Elm Street
Albuquerque, NM 87102
Case No. 1000596

Dear Mr. Dourte:

Attached is a copy of the approved Second Amended Site Plan for Subdivision. Our office has visited the site at regular intervals appropriate to the stages of construction. Such visits and observations are not intended to be an exhaustive check or detailed inspection of the Contractor's work but rather are to allow our office, as experienced professionals, to become generally familiar with the work in progress and to determine, in general, if the work is proceeding in accordance with the Contact Documents.

Based on our observations we hereby certify that this site has been constructed in substantial compliance with the approved Second Amended Site Plan for Subdivision, with the only two notable exceptions:

1. Trash Enclosure relocation:
   The trash enclosure was moved 2'-0" west to avoid undermining the concrete footing of an existing overhead highway sign. As a result, four parking stalls were stripped as compact stalls instead of standard stalls. This change increased our total from 45 compact stalls to 49. Our maximum allowable is 66 compact stalls. (see enclosures)
2. Height of ADA signage:
   We have pole-mounted signage in the public way. As per ADA the signage was designed to be mounted at 5'-0" above finish grade. However, the signage was mounted at 7'-0" above finish grade due to a stipulation in the Manual of Uniform Traffic Control Devices, which allows for signage in the public way to be mounted at 7'-0", to avoid injury to pedestrians. (see enclosures)

If you have any concerns or questions regarding this, please fell free to contact us.

Sincerely,

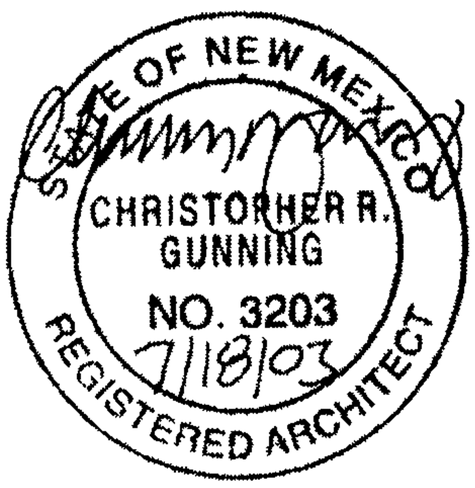

Christopher R. Gunning, AIA
Principal
Dekker/Perich/Sabatini

S \02057 NMEAF\General\Correspondence\L-TCLcert 2003-7-18 doc

Dekker/Perich/Sabatini
architecture
interiors
planning
engineering

Cc: Jack Westman, Heart Office LLC
Marty Hibbs, BradburyStamm Construction
Bob Golden, BradburyStamm Construction
file

Enclosures

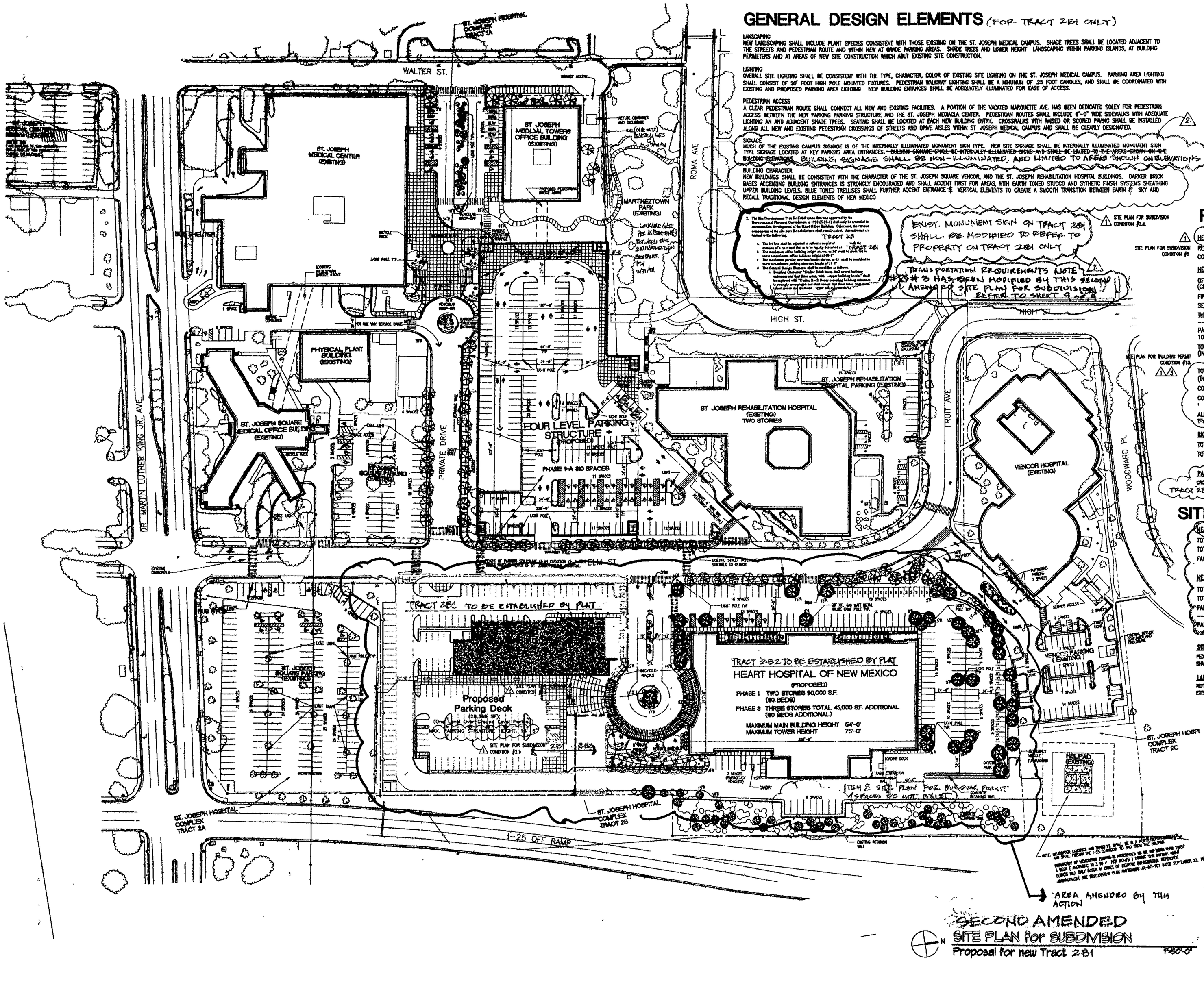

GENERAL DESIGN ELEMENTS (FOR TRACT 2B1 ONLY)

LANDSCAPING
NEW LANDSCAPING SHALL INCLUDE PLANT SPECIES CONSISTENT WITH THOSE EXISTING ON THE ST. JOSEPH MEDICAL CAMPUS. SHADE TREES SHALL BE LOCATED ADJACENT TO THE STREETS AND PEDESTRIAN ROUTE AND WITHIN NEW AT GRADE PARKING AREAS. SHADE TREES AND LOWER HEIGHT LANDSCAPING WITHIN PARKING ISLANDS, AT BUILDING PERIMETERS AND AT AREAS OF NEW SITE CONSTRUCTION WHICH ABUT EXISTING SITE CONSTRUCTION.

LIGHTING
OVERALL SITE LIGHTING SHALL BE CONSISTENT WITH THE TYPE, CHARACTER, COLOR OF EXISTING SITE LIGHTING ON THE ST. JOSEPH MEDICAL CAMPUS. PARKING AREA LIGHTING SHALL CONSIST OF 20' FOOT HIGH POLE MOUNTED FIXTURES. PEDESTRIAN WALKWAY LIGHTING SHALL BE A MINIMUM OF .25 FOOT CANDLES, AND SHALL BE COORDINATED WITH EXISTING AND PROPOSED PARKING AREA LIGHTING NEW BUILDING ENTANCES SHALL BE ADEQUATELY ILLUMINATED FOR EASE OF ACCESS.

PEDESTRIAN ACCESS
A CLEAR PEDESTRIAN ROUTE SHALL CONNECT ALL NEW AND EXISTING FACILITIES. A PORTION OF THE VACATED MARQUETTE AVE. HAS BEEN DEDICATED SOLEY FOR PEDESTRIAN ACCESS BETWEEN THE NEW PARKING PARKING STRUCTURE AND THE ST. JOSEPH MEDIACLA CENTER. PEDESTRIAN ROUTES SHALL INCLUDE 6'-0" WIDE SIDEWALKS WITH ADEQUATE LIGHTING AN AND ADJACENT SHADE TREES. SEATING SHALL BE LOCATED AT EACH NEW BUILDING ENTRY. CROSSWALKS WITH RAISED OR SCORED PAVING SHALL BE INSTALLED ALONG ALL NEW AND EXISTING PEDESTRIAN CROSSINGS OF STREETS AND DRIVE AISLES WITHIN ST. JOSEPH MEDICAL CAMPUS AND SHALL BE CLEARLY DESIGNATED.

SIGNAGE
MUCH OF THE EXISTING CAMPUS SIGNAGE IS OF THE INTERNALLY ILLUMINATED MONUMENT SIGN TYPE. NEW SITE SIGNAGE SHALL BE INTERNALLY ILLUMINATED MONUMENT SIGN TYPE SIGNAGE LOCATED AT KEY PARKING AREA ENTRANCES. ~~BUILDING SIGNAGE SHALL BE INTERNALLY ILLUMINATED SIGNS AND SHALL BE LIMITED TO THE AREAS SHOWN ON THE BUILDING ELEVATIONS~~ BUILDING SIGNAGE SHALL BE NON-ILLUMINATED, AND LIMITED TO AREAS SHOWN ON ELEVATIONS

BUILDING CHARACTER
NEW BUILDINGS SHALL BE CONSISTENT WITH THE CHARACTER OF THE ST. JOSEPH SQUARE VENCOR, AND THE ST. JOSEPH REHABILITATION HOSPITAL BUILDINGS. DARKER BRICK BASES ACCENTING BUILDING ENTRANCES IS STRONGLY ENCOURAGED AND SHALL ACCENT FIRST FOR AREAS, WITH EARTH TONED STUCCO AND SYTHETIC FINISH SYSTEMS SHEATHING UPPER BUILDING LEVELS. BLUE TONED TRELLISES SHALL FURTHER ACCENT ENTRANCE & VERTICAL ELEMENTS TO CREATE A SMOOTH TRANSITION BETWEEN EARTH & SKY AND RECALL TRADITIONAL DESIGN ELEMENTS OF NEW MEXICO

1. The Site Development Plan for Subdivision has been approved by the Environmental Planning Commission in 1999 (Z-99-5) and is to be amended to accommodate development of the Heart Office Building. Otherwise, the remaining provisions of the site plan for subdivision remain valid. Amendments are limited to the following.

TRACT 2B

a. This lot has shall be adjusted to reflect a transfer of ~~[illegible]~~ TRACT 2B1 consists of a new tract that is to be legally described as ~~[illegible]~~ TRACT 2B1
b. The maximum office building height shall be 54' 0" and is authorized to ~~[illegible]~~ show a maximum office building height of 60' 0"
c. The maximum parking structure height shall be 54' 0" and is authorized to ~~[illegible]~~ show a maximum parking structure height of 75' 0"
d. The Original Design Elements shall be modified as follows:
1. Building Character "Dark or Brick base and accent building materials and Red Tile accent roofs, with ~~upper building levels~~" shall be replaced with "Darker Brick Base extending building materials and accent roofs and shall extend through first floor level and upper accent elements. ~~upper building levels~~"

EXIST. MONUMENT SIGN ON TRACT 2B1 SHALL BE MODIFIED TO REFER TO PROPERTY ON TRACT 2B1 ONLY

TRANSPORTATION REQUIREMENTS NOTE #3 HAS BEEN MODIFIED BY THIS SECOND AMENDED SITE PLAN FOR SUBDIVISION REFER TO SHEET 9 OF 9

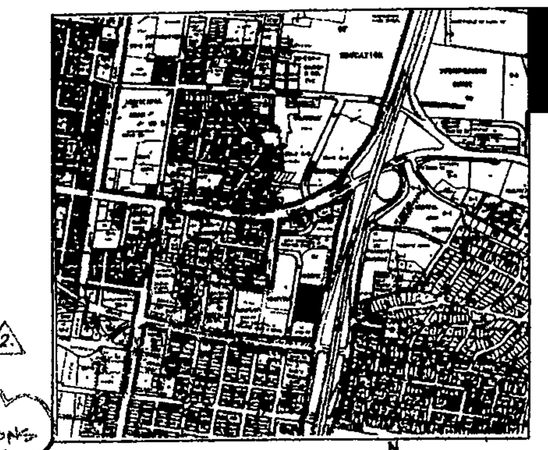

VICINITY MAP

J14,J15,K14,K15 1"=750'-0"

PARKING INFORMATION

HEART HOSPITAL PARKING CALCULATIONS (TRACT 2B2)

SITE PLAN FOR SUBDIVISION CONDITION #5

REQUIRED SPACES (60 BED HOSPITAL)	30
CONFIRMED EXISTING SPACES	125

HEART INSTITUTE OFFICE BUILDING (TRACT 2B1 PARKING REQUIREMENTS)

OFFICES
(CITY ZONING CODE PART 3, SECTION 14-16-3-1, PARAGRAPH A21)

FIRST FLOOR: 6,150 GSF x .85 = 5,227.5 NSF/200 =	26
SECOND FLOOR: 15,600 GSF x .85 = 13,260 NSF/300 =	44
THIRD FLOOR: 14,800 GSF x .85 = 12580 NSF/300 =	42
PARKING SPACES REQUIRED	~~112~~
10% ALBUQUERQUE TRANSIT SYSTEM REDUCTION	10%
TOTAL PARKING SPACES REQUIRED (INCLUDING, 6 ACCESSIBLE, WITH 1 VAN ACCESSIBLE)	101
TOTAL PARKING SPACES PROVIDED: (183 + 83) (INCLUDING, 8 ACCESSIBLE, WITH 4 VAN ACCESSIBLE)	266
COMPACT SPACES ALLOWED. 266 x 25%	66
COMPACT SPACES PROVIDED:	45

ALL COMPACT PARKING SPACES WILL BE 8'-0"W x 20'-0"L MIN. FOR TRACT 2B1.

MODIFIED DURING CONSTRUCTION PER LETTER 7/18/03

SITE PLAN FOR BUILDING PERMIT CONDITION #10.

BICYCLE PARKING REQUIREMENTS
TOTAL BICYCLE SPACES REQUIRED: 101/20 = 5
TOTAL BICYCLE SPACES PROVIDED: 5

SITE PLAN FOR SUBDIVISION CONDITION #24.

PARKING & ACCESS EASEMENT
CROSS PARKING AND CROSS ACCESS EASMENTS BETWEEN TRACT 2B2 (HEART HOSPITAL) AND TRACT 2B1 (HEART INSTITUTE OFFICE BUILDING) SHALL BE ESTABLISHED BY PLAT.

SITE INFORMATION

SITE PLAN FOR SUBDIVISION CONDITION #5.

HEART HOSPITAL SITE CALCULATIONS (TRACT 2B2)

TOTAL BUILDING SQUARE FOOTAGE	57,328
TOTAL SITE SQUARE FOOTAGE: 213,494.4 SF (4.9 ACRES)	
FAR	.27

HEART INSTITUTE MEDICAL OFFICE BUILDING (TRACT 2B1)

TOTAL BUILDING SQUARE FOOTAGE	38,550
TOTAL SITE SQUARE FOOTAGE: 101,285.5 SF (2.32 ACRES)	
FAR	.38
PARKING DECK SQUARE FOOTAGE	28,765

SITE LIGHTING
PEDESTRIAN WALKWAY LIGHTING SHALL BE A MINIMUM OF .25 FOOTCANDLES AND SHALL BE COORDINATED WITH EXISTING & PROPOSED PARKING AREA LIGHTING.

LANDSCAPING
REFER TO SHEET 7 OF THIS SUBMITTAL FOR ADDITIONAL INFORMATION ON EXISTING LANDSCAPING CONDITIONS

LEGEND

EXISTING PROPERTY LINES AS PER LATEST PLAT
PROPOSED PROPERTY LINE

02EPC 00140
02DRB - 00533

CASE NUMBER: 1000596

THIS SITE DEVELOPMENT PLAN IS CONSISTENT WITH THE PLAN APPROVED AT THE March 22 2002 ENVIRONMENTAL PLANNING COMMISSION HEARING.

TRAFFIC ENGINEER, TRANSPORTATION DIVISION	7-17-02
DIV. DIRECTOR/MAPOA	6/26/02
PUBLIC WORKS, UTILITY DIVISION	6/26/02
Deborah Hilyard — ~~DEPARTMENT~~ DEVELOPMENT DEPARTMENT, CIP PLANNING AND MANAGEMENT	6/20/02
DIV. PLANNING, PLANNING DIVISION	7/25/02

Dekker Perich Sabatini
6801 Jefferson
Suite 100
Albuquerque, NM
505 761-9700
fax 761-4222
dps@dpsabq.com
ARCHITECT

DRB Submittal
JUNE 26, 2002
ENGINEER

HEART INSTITUTE MEDICAL OFFICE BUILDING

REVISIONS
1 4-4-02 EPC FINDINGS & CONDITIONS B-2
2 6-19-02 NEIGHBORHOOD ASSOC. COMMENTS
3 6-25-02 ARCHITECT REVISION
4 EPC APPROVED DRAWINGS

DRAWN BY
REVIEWED BY
DATE
PROJECT NO. 6 OF A# 1
DRAWING NAME
SITE PLAN for SUBDIVISION
SHEET NO.
A1

GENERAL DESIGN ELEMENTS (TRACT 2B1 ONLY)

LANDSCAPING
NEW LANDSCAPING SHALL INCLUDE PLANT SPECIES CONSISTENT WITH THOSE EXISTING ON THE ST. JOSEPH MEDICAL CAMPUS. SHADE TREES SHALL BE LOCATED ADJACENT TO NEW LANDSCAPING SHALL INCLUDE PLANT SPECIES CONSISTENT WITH THOSE EXISTING ON THE ST. JOSEPH MEDICAL CAMPUS. SHADE TREES SHALL BE LOCATED ADJACENT TO THE STREETS AND PEDESTRIAN ROUTE AND WITHIN NEW AS WELL AS EXISTING PARKING AREAS. SHADE TREES AND LOWER HEDGE LANDSCAPING WITHIN PARKING ISLANDS AT BUILDING PERIMETERS AND AT AREAS OF NEW SITE CONSTRUCTION WHERE ANY EXISTING SITE CONSTRUCTION.

LIGHTING
OVERALL SITE LIGHTING SHALL BE COORDINATED WITH THE TYPE, CHARACTER, COLOR OF EXISTING SITE LIGHTING ON THE ST. JOSEPH MEDICAL CAMPUS. PARKING AREA LIGHTING SHALL CONSIST OF 30' FOOT HIGH POLE MOUNTED FIXTURES. PEDESTRIAN WALKWAY LIGHTING SHALL BE A MINIMUM OF 25 FOOT CANDLES, AND SHALL BE COORDINATED WITH EXISTING AND PROPOSED PARKING AREA LIGHTING. NEW BUILDING ENTRANCES SHALL BE ADEQUATELY ILLUMINATED FOR EASE OF ACCESS.

PEDESTRIAN ACCESS
A CLEAR PEDESTRIAN ROUTE SHALL CONNECT ALL NEW AND EXISTING FACILITIES. A PORTION OF THE WICKED WARRIOR'S AVE. WAS BEEN DEDICATED SOLELY FOR PEDESTRIAN ACCESS BETWEEN THE NEW PARKING PARKING STRUCTURE AND THE ST. JOSEPH MEDICAL CENTER. PEDESTRIAN BARRIERS SHALL INCLUDE 6'-8" HIGH BARRIERS WITH ADEQUATE LIGHTING AS AND ADJACENT TRAFFIC TRACKS. SIGNAGE SHALL BE LOCATED AT EACH NEW BUILDING ENTRY. COORDINATED WITH PAVERS OR BORDER PAVING SHALL BE INSTALLED ALONG ALL NEW AND EXISTING PEDESTRIAN CROSSINGS OF STREETS AND DRIVE AISLES WITHIN ST. JOSEPH MEDICAL CAMPUS AND SHALL BE CLEARLY DEMARCATED.

SIGNAGE
BLOCK OF THE EXISTING CAMPUS SIGNAGE IS OF THE INTERNALLY ILLUMINATED MONUMENT SIGN TYPE. NEW SITE SIGNAGE SHALL BE INTERNALLY ILLUMINATED MONUMENT SIGN TYPE SIGNAGE LOCATED AT KEY ENTRY AREA INTERSECTIONS. ~~BUILDING SIGNAGE SHALL BE NON-ILLUMINATED AND LIMITED TO AREA SHOWN ON ELEVATIONS~~
BUILDING SIGNAGE SHALL BE NON ILLUMINATED AND LIMITED TO AREA SHOWN ON ELEVATIONS

BUILDING CHARACTER
NEW BUILDINGS SHALL BE CONSISTENT WITH THE CHARACTER OF THE ST. JOSEPH BRUNING VICINITY AND THE ST. JOSEPH REHABILITATION HOSPITAL BUILDING. DARKER BRICK BASES ACCENTING BUILDING ENTRANCES IS STRONGLY ENCOURAGED AND SHALL ACCENT FIRST PAR METAL, NEW EARTH TONED STUCCO AND SYNTHETIC FINISH SYSTEMS. BREAKING BASES ACCENTING BUILDING ENTRANCES IS STRONGLY ENCOURAGED AND SHALL ACCENT FIRST PAR METAL, NEW EARTH TONED STUCCO AND SYNTHETIC FINISH SYSTEMS. BREAKING UPPER BUILDING LEVELS. BLUE TONED TRELLISES SHALL FURTHER ACCENT ENTRANCES & VERTICAL ELEMENTS TO CREATE A SMOOTH TRANSITION BETWEEN EAST & WEST AND REFLECT TRADITIONAL DESIGN ELEMENTS OF NEW MEXICO.

SEE PLAN FOR SUBMISSION REQUIRED ITEM

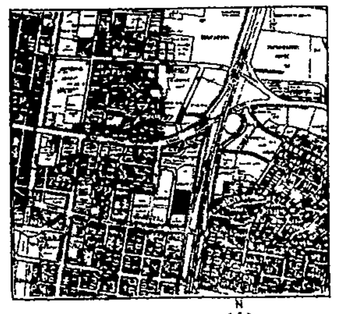

VICINITY MAP

SITE INFORMATION

SEE PLAN FOR SUBMISSION REQUIRED ITEM

NEART HOSPITAL SITE CALCULATIONS (TRACT 2B1)

TOTAL HOSPITAL SQUARE FOOTAGE	57,338
TOTAL SITE SQUARE FOOTAGE	213,444.45 SF (4.9 ACRES)
FAR	.27

NEART INSTITUTE MEDICAL OFFICE BUILDING (TRACT 2B1)

TOTAL BUILDING SQUARE FOOTAGE	36,550
TOTAL SITE SQUARE FOOTAGE	101,285.5 SF (2.325 ACRES)
FAR	.36
PARKING DECK SQUARE FOOTAGE	29,795

SITE LIGHTING
PEDESTRIAN WALKWAY LIGHTING SHALL BE A MINIMUM OF 25 FOOT-CANDLES AND SHALL BE COORDINATED WITH EXISTING & PROPOSED PARKING AREA LIGHTING.

LANDSCAPING
REFER TO SHEET 7 OF THIS SUBMITTAL FOR ADDITIONAL INFORMATION ON EXISTING LANDSCAPING CONDITIONS

LEGEND

EXISTING PROPERTY LINES
PROPOSED PROPERTY LINE

PARKING INFORMATION

SEE PLAN FOR SUBMISSION REQUIRED ITEM

NEART HOSPITAL PARKING CALCULATIONS (TRACT 2B2)

REQUIRED SPACES (NO NEW PARKING)	38
CONFIRMED EXISTING SPACES	133

NEART INSTITUTE MEDICAL OFFICE BUILDING (TRACT 2B1) (PARKING REQUIREMENTS)

OFFICES
(CITY ZONING CODE PART 2, SECTION 14-16-3-1, PARAGRAPH A21)

FIRST FLOOR: 6,150 GSF x .85 = 5,227.5 NSF/200 =	26
SECOND FLOOR: 15,800 GSF x .86 = 13,588 NSF/200 =	68
THIRD FLOOR: 14,800 GSF x .85 = 12580 NSF/200 =	62
PARKING SPACES REQUIRED	112
10% ALBUQUERQUE TRANSIT SYSTEM REDUCTION	10%
TOTAL PARKING SPACES REQUIRED (INCLUDING 8 ACCESSIBLE, WITH 1 VAN ACCESSIBLE)	101

SEE PLAN FOR BUILDING PERMIT REQUIRED ITEM

TOTAL PARKING SPACES PROVIDED: (183 x .63) (INCLUDING 8 ACCESSIBLE, WITH 4 VAN ACCESSIBLE)	266
COMPACT SPACES ALLOWED: 266 x .25%	66
COMPACT SPACES PROVIDED:	45

ALL COMPACT PARKING SPACES WILL BE 8'-0"W x 20'-6"L MIN.

~~TRACT 2B1~~

BICYCLE PARKING REQUIREMENTS
TOTAL BICYCLE SPACES REQUIRED: 101/20 = 5
TOTAL BICYCLE SPACES PROVIDED: 5

SEE PLAN FOR SUBMISSION REQUIRED ITEM

PARKING & ACCESS EASEMENT
TRACT 2B2
SHARE PARKING AND DRIVE AISLES EASEMENTS BETWEEN TRACT 2B1 (NEART HOSPITAL) AND TRACT 2B1 (NEART INSTITUTE OFFICE BUILDING) SHALL BE ESTABLISHED IN PLAT.

CASE NUMBER:

THIS SITE DEVELOPMENT PLAN IS CONSISTENT WITH THE PLAN APPROVED AT THE _____ 2002 ENVIRONMENTAL PLANNING COMMISSION HEARING

TRAFFIC ENGINEER, TRANSPORTATION DIVISION

CITY ENGINEER/AMAFCA

PUBLIC WORKS, UTILITY DIVISION

DESIGN AND DEVELOPMENT DEPARTMENT, CIP

CITY PLANNER, PLANNING DIVISION

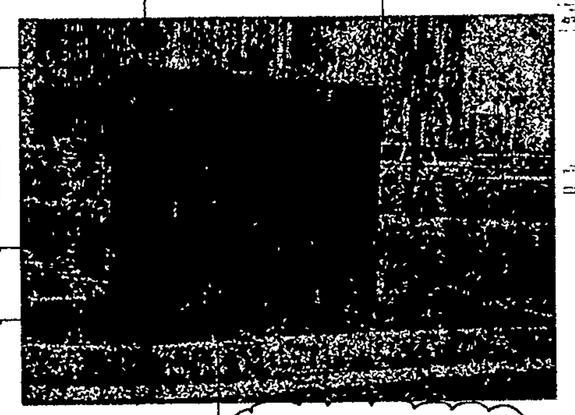

INTERNALLY ILLUMINATED METAL SIGNAGE

EXISTING MONUMENT SIGNS WILL BE MODIFIED TO REFER ONLY TO TRACT 2B1

Example Monument Sign
N.T.S.

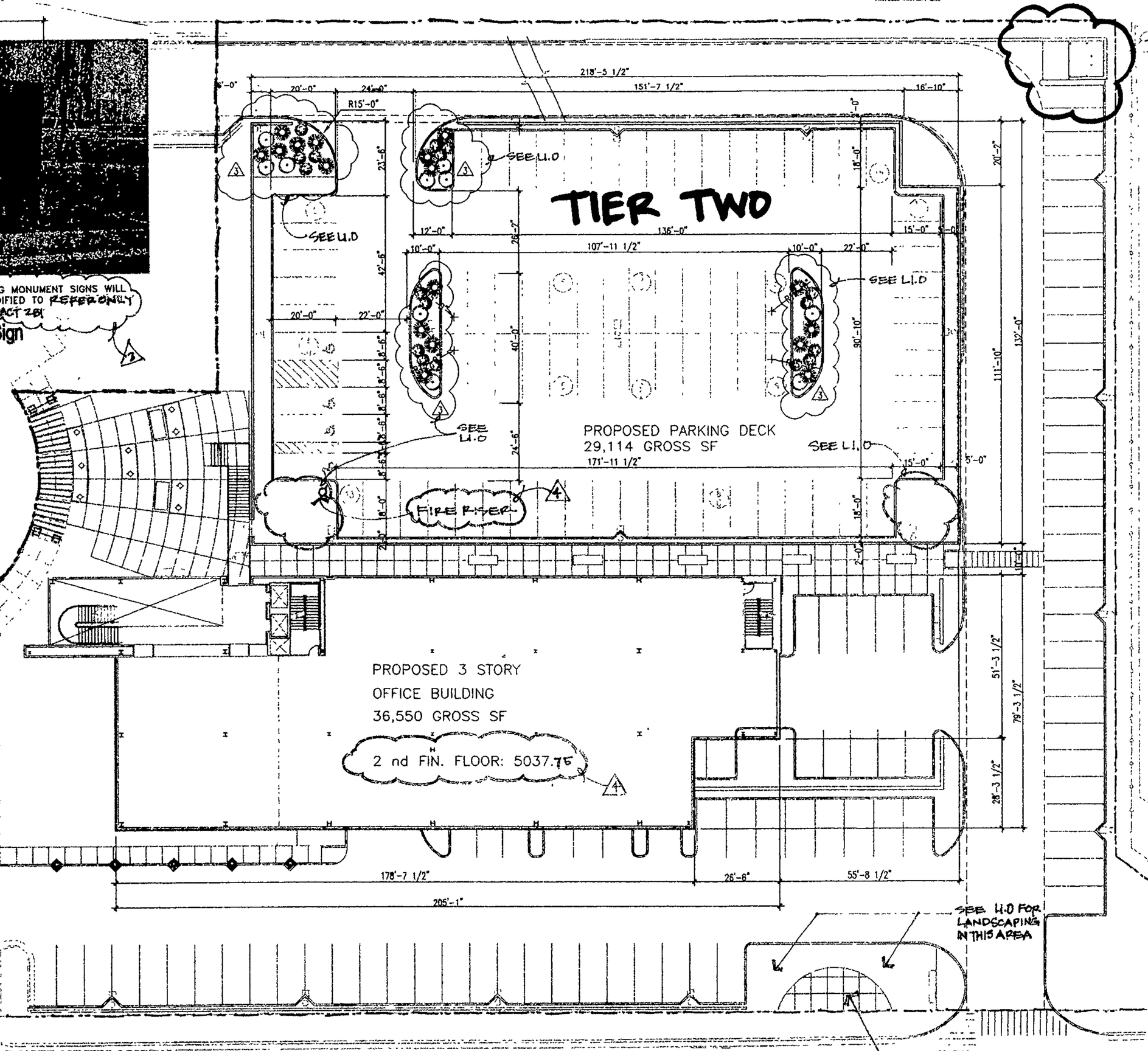

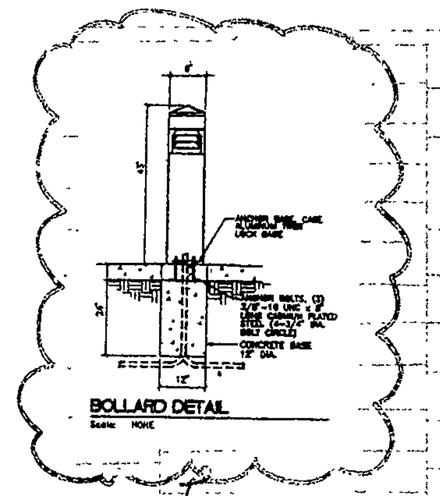

DRB CONDITION

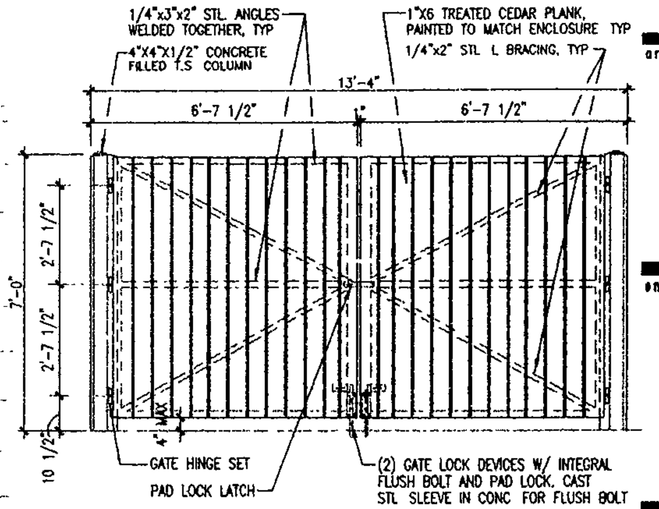

Refuse Enclosure Elevation
3/8"=1'-0"
< X-02DUMP3 DWG >

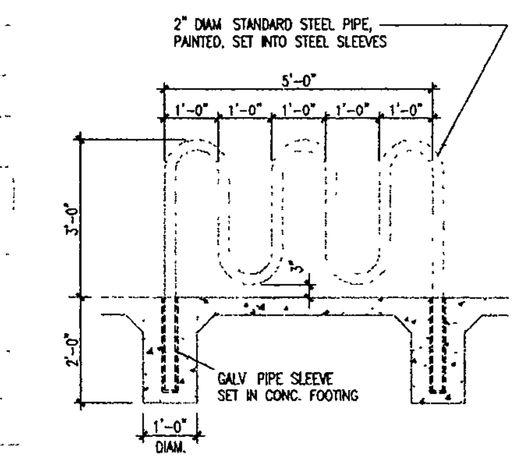

Section Detail
1/2"=1'-0"
< 02BIKE01 DWG >

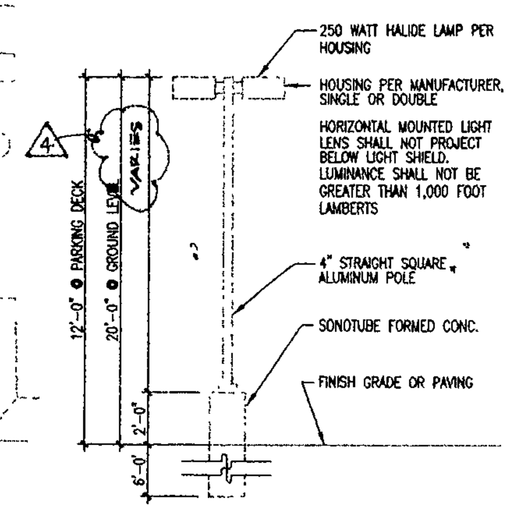

Light Pole Elevation
1/4"=1'-0"
< X-LIGHT DWG >

Tract 2B1 Site Development Plan for Building Permit
1"=20'-0"
DECK PLAN
0 5' 10' 20'

architecture
interior
planning
engineering

Dekker Perich Sabatini

6801 Jefferson NE
Suite 100
Albuquerque, NM 8710

505 761-9700
fax 761-4222
dps@dpsabq.com

architect

engineer

DRB Submittal

JUNE 26, 2002.

project

Heart Institute Medical Office Building

Albuquerque, NM 87102

revisions
3 6-18-02 NEIGHBORHOOD ASSOC COMM
4 6-25-02 ARCHITECT TO REVISION TO DRB APPROVED PLAN

plotted: 01-24-2002 8:36A
S:\01081-HMOB\01 SD\ARCH\DWGS-DPC\01081E

drawn by
reviewed by
date 6-26-02
project no. #1005916
drawing name
Tract 2B1
Site Development Plan for Building Permit

sheet no.
A4
3 of 9

GENERAL DESIGN ELEMENTS (TRACT 2 1 ONLY)

LANDSCAPING
NEW LANDSCAPING SHALL INCLUDE PLANT SPECIES CONSISTENT WITH THOSE EXISTING ON THE ST. JOSEPH MEDICAL CAMPUS. SHADE TREES SHALL BE LOCATED ADJACENT TO THE STREETS AND PEDESTRIAN ROUTE AND SHRUBS NEX AT GRADE PARKING AREAS. SHADE TREES AND LOWER HEIGHT LANDSCAPING WITHIN PARKING BLOCKS, AT BUILDING PERIMETERS AND AT AREAS OF NEW SITE CONSTRUCTION WHICH ABUT EXISTING SITE CONSTRUCTION.

LIGHTING
OVERALL SITE LIGHTING SHALL BE CONSISTENT WITH THE TYPE, CHARACTER, COLOR OF EXISTING SITE LIGHTING ON THE ST. JOSEPH MEDICAL CAMPUS. PARKING AREA LIGHTING SHALL CONSIST OF 30' POLE MOUNTED FIXTURES. PEDESTRIAN BOLLARD LIGHTING SHALL BE A MINIMUM OF .25 FOOT CANDLES, AND SHALL BE COORDINATED WITH EXISTING AND PROPOSED PARKING AREA LIGHTING. NEW BUILDING ENTRANCES SHALL BE ADEQUATELY ILLUMINATED FOR EASE OF ACCESS.

PEDESTRIAN ACCESS
A CLEAR PEDESTRIAN ROUTE SHALL CONNECT ALL NEW AND EXISTING BUILDINGS. A PORTION OF THE WICKED WAREHOUSE INC. HAS BEEN DEDICATED SOLELY FOR PEDESTRIAN ACCESS BETWEEN THE NEW PARKING PARKING STRUCTURE AND THE ST. JOSEPH MEDICAL CAMPUS. PEDESTRIAN ROUTES SHALL INCLUDE 5'-0" WIDE SIDEWALKS WITH ADEQUATE LENGTHS OF AND ADJACENT SHADE TREES. SECURITY SHALL BE LOCATED AT EACH NEW BUILDING ENTRY. CROSSWALKS WITH SHADED OR SCORED PAVING SHALL BE INSTALLED ALONG ALL NEW AND EXISTING PEDESTRIAN WAYFINDING OF STREETS AND SHALL AISLES WITHIN ST. JOSEPH MEDICAL CAMPUS AND SHALL BE CLEARLY DESIGNATED.

SIGNAGE
MUCH OF THE EXISTING CAMPUS SIGNAGE IS OF THE INTERNALLY ILLUMINATED MONUMENT BRICK TYPE. NEW SIGN SIGNAGE SHALL BE INTERNALLY ILLUMINATED MONUMENT SIGN TYPE SIGNAGE LOCATED AT KEY PARKING AREA ENTRANCES. BUILDING SIGNAGE SHALL BE NON-ILLUMINATED & LIMITED TO AS-BA SIGNS ON ELEVATIONS

EXTERIOR DESIGN
NEW BUILDINGS SHALL BE COORDINATED WITH THE CHARACTER OF THE ST. JOSEPH SQUARE VENTURE, AND THE ST. JOSEPH REHABILITATION HOSPITAL BUILDINGS. DARKER BRICK TONES ACCENTING BUILDING IMPRINTS IS STRONGLY ENCOURAGED AND SHALL ACCENT THOSE FOR MEDICAL WITH EARTH TONED STUCCO AND SYNTHETIC PAINTED SYSTEMS SHOULDING. UPPER BUILDING LEVELS, BLUE TONED WALLBOXES SHALL PARTNER ACCENT DRAINAGE. VERTICAL ELEMENTS TO CREATE A SMOOTH TRANSITION BETWEEN CAPS BOX AND MIDDLE TRANSITIONAL DESIGN ELEMENTS OF NEW MEXICO.

PARKING INFORMATION

HEART HOSPITAL PARKING CALCULATIONS (TRACT 282)
SEE PLAN FOR DIMENSIONS SHEET 2

TOTAL PARKING SPACES REQUIRED	39
CONFIRMED EXISTING SPACES	125

HEART INSTITUTE OFFICE BUILDING (TRACT 281) PARKING REQUIREMENTS

OFFICES
(CITY ZONING CODE PART 2, SECTION 14-16-3-1, PARAGRAPH A21)

FIRST FLOOR: 8,150 GSF x .85 = 6,927.5 NSF/200 =	34
SECOND FLOOR: 15,000 GSF x .85 = 12,300 NSF/200 =	64
THIRD FLOOR: 14,000 GSF x .85 = 11900 NSF/200 =	42
PARKING SPACES REQUIRED	112
NEW ALBUQUERQUE WAIVER SYSTEM REDUCTION	14%
TOTAL PARKING SPACES REQUIRED (INCLUDES 8 ACCESSIBLE WITH 1 VAN ACCESSIBLE)	181

SEE PLAN FOR BUILDING FOOTPRINT SHEET 2

TOTAL PARKING SPACES PROVIDED: (163 + 63) (INCLUDING, 8 ACCESSIBLE, WITH 4 VAN ACCESSIBLE)	166
COMPACT SPACES ALLOWED: 266 x 25%	66
COMPACT SPACES PROVIDED:	45

ALL COMPACT PARKING SPACES WILL BE 8'-0"W x 16'-0"L MIN.

BICYCLE PARKING REQUIREMENTS
TOTAL BICYCLE SPACES REQUIRED: 181/20 = 5
TOTAL BICYCLE SPACES PROVIDED: 5

SEE PLAN FOR DIMENSIONS SHEET 2

PARKING & ACCESS EASEMENT (TRACT 282)
GRANT PARKING AND MINIMUM ACCESS EASEMENT BETWEEN SCHOOL (DRAFT VERSION) AND (HEART INSTITUTE OFFICE BUILDING) SHALL BE CONTINUED IN PLAT

TRACT 281

SITE INFORMATION

SEE PLAN FOR DIMENSIONS SHEET 2

HEART HOSPITAL NET CALCULATIONS (TRACT 282)

TOTAL GROSS SITE AREA	12.328
TOTAL NET SQUARE FOOTAGE	279,484.4 SF (4.9 ACRES)
FAR	.27

HEART INSTITUTE MEDICAL OFFICE BUILDING (TRACT 281)

TOTAL PROPOSED SQUARE FOOTAGE	36,550
TOTAL SITE SQUARE FOOTAGE	101,285.5 SF (2.32 ACRES)
FAR	.36
PARKING DECK SQUARE FOOTAGE	18,745

SITE LIGHTING
PEDESTRIAN WALKWAY LIGHTING SHALL BE A MINIMUM OF .25 FOOTCANDLES AND SHALL BE COORDINATED WITH EXISTING & PROPOSED PARKING AREA LIGHTING.

LANDSCAPING
REFER TO SECT. 7 OF THE DOMESTIC FOR ADDITIONAL INFORMATION ON EXISTING LANDSCAPING REQUIREMENTS

LEGEND

EXISTING PROPERTY LINES
PROPOSED PROPERTY LINE

VICINITY MAP

CASE NUMBER: 1000596

02-DRB - 00535 02-EPC - 00141

THIS SITE DEVELOPMENT PLAN IS CONSISTENT WITH THE PLAN APPROVED AT THE March 22 2002 ENVIRONMENTAL PLANNING COMMISSION HEARING.

TRAFFIC ENGINEER, TRANSPORTATION DIVISION	7-17-02
CITY ENGINEER/AMAFCA	6/26/02
PUBLIC WORKS, UTILITY DIVISION	6/26/02
~~DESIGN REVIEW DEVELOPMENT~~ DEPARTMENT, CIP	6/26/02
~~CITY PLANNER, PLANNING DIVISION~~	7/25/02

SITE LIGHTING
PEDESTRIAN WALKWAY LIGHTING SHALL BE A MINIMUM OF .25 FOOT CANDLES AND SHALL BE COORDINATED WITH EXISTING & PROPOSED PARKING AREA LIGHTING.

SITE DESIGN
SITE SHALL CONFORM TO DPM STANDARDS

SITE PLAN FOR BUILDING PERMIT CONDITION #7d

AFD PLANS CHECKING OFFICE
924-3611
APPROVED/DISAPPROVED
HYDRANT(S) ONLY
SIGNATURE & DATE 6/26/02

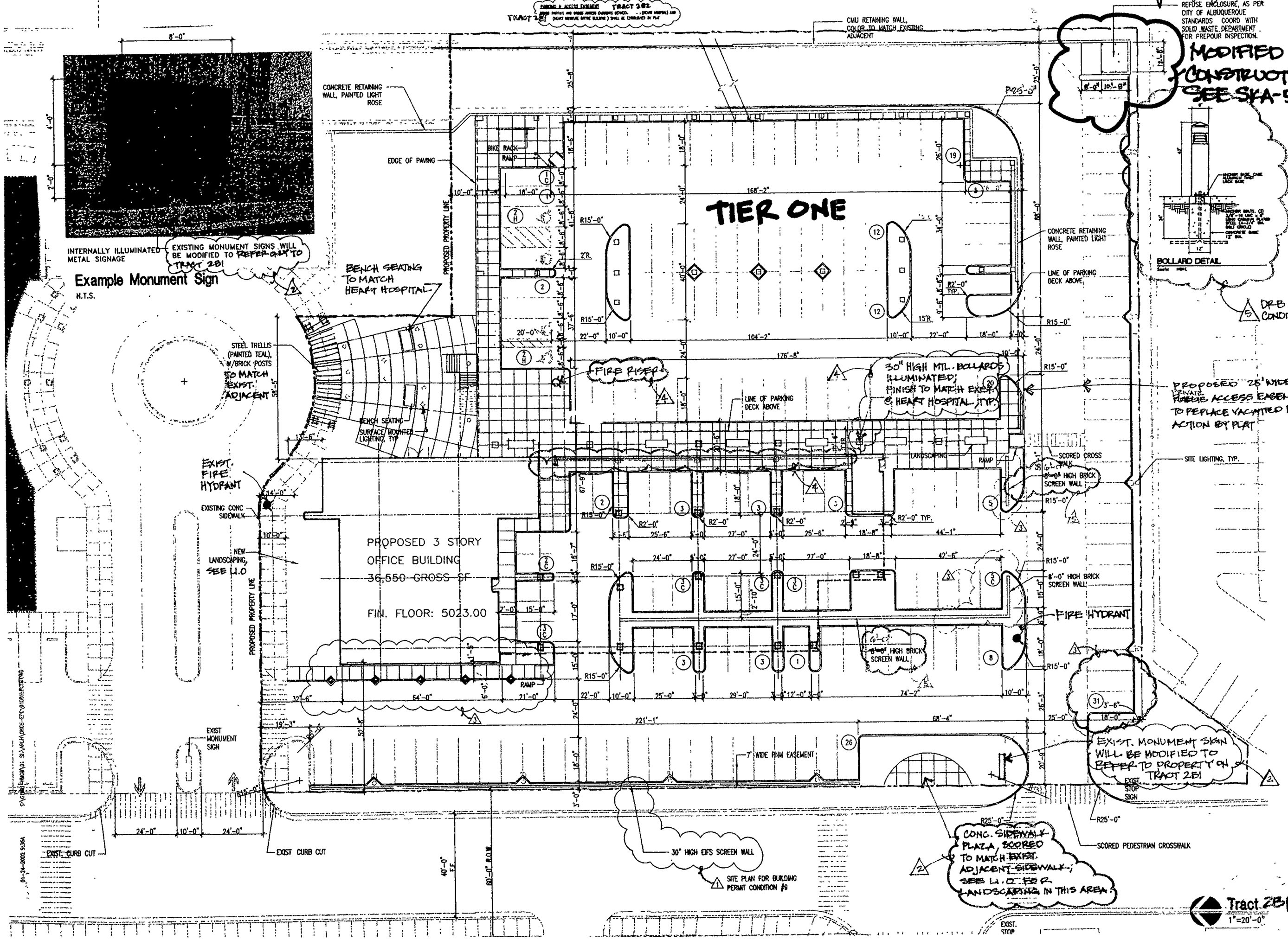

REFUSE ENCLOSURE, AS PER CITY OF ALBUQUERQUE STANDARDS COORD WITH SOLID WASTE DEPARTMENT FOR PREPOUR INSPECTION.

MODIFIED DURING CONSTRUCTION, SEE SKA-52.

DRB CONDITION

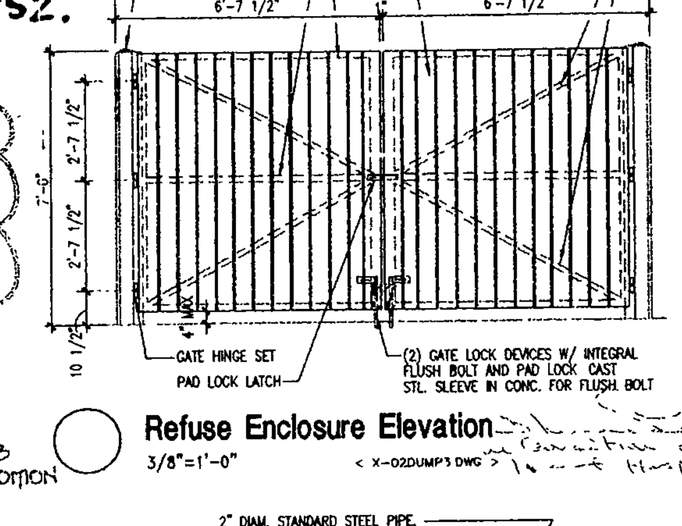

Refuse Enclosure Elevation
3/8"=1'-0"
< X-02DUMPS.DWG >

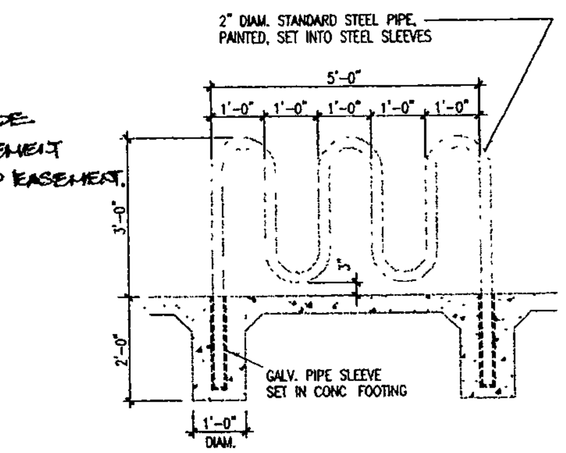

Section Detail
1/2"=1'-0"
< 02BIKEO1.DWG >

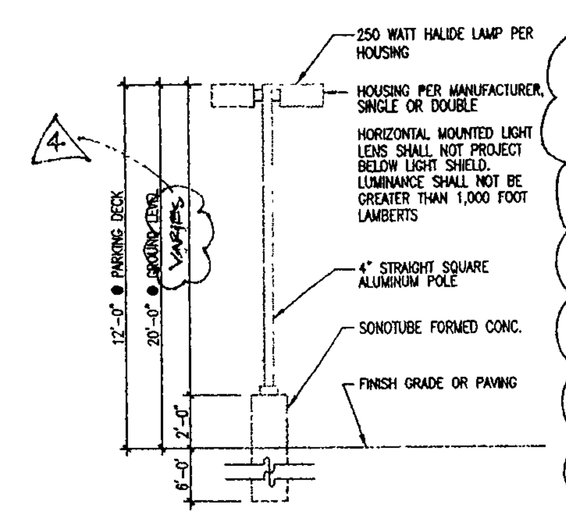

Light Pole Elevation
1/4"=1'-0"
< X-LIGHT.DWG >

ADMINISTRATIVE AMENDMENT #1 DATED 7-31-02, SHEETS A301 & A302. VARIOUS CHANGES WINDOW OPENINGS AND PARKING DECK OPENINGS.

architect interior plann engineer
Dekker Perich Sabatini
6801 Jefferson NE
Suite 100
Albuquerque, NM 87
505 761-9700
fax 761-4222
dps@dpsabq.com

DRB Submittal
JUNE 26, 2002

revisions	
4-8-02	EPC FINDINGS AND CON 3-22-02
6-18-02	NEIGHBORHOOD ASSOC.
6-19-02	DRB REVIEW COMMENTS
6-26-02	ARCHITECTURAL REVISION TO EPC, DRB DRAWINGS
12-2-02	ADMINISTRATIVE AMENDMENT

plotted: 01-24-2002 9:36A
S:\01081-MAOB\01 3D\ARCH\DWGS-EPC\01

drawn by
reviewed by
date 6-26-02
project no. 1000596
drawing name
Tract 281 Site Development Pl for Building Permit

Heart Institute Medical Office Building

Albuquerque, NM 87102

sheet no. A3

2 of

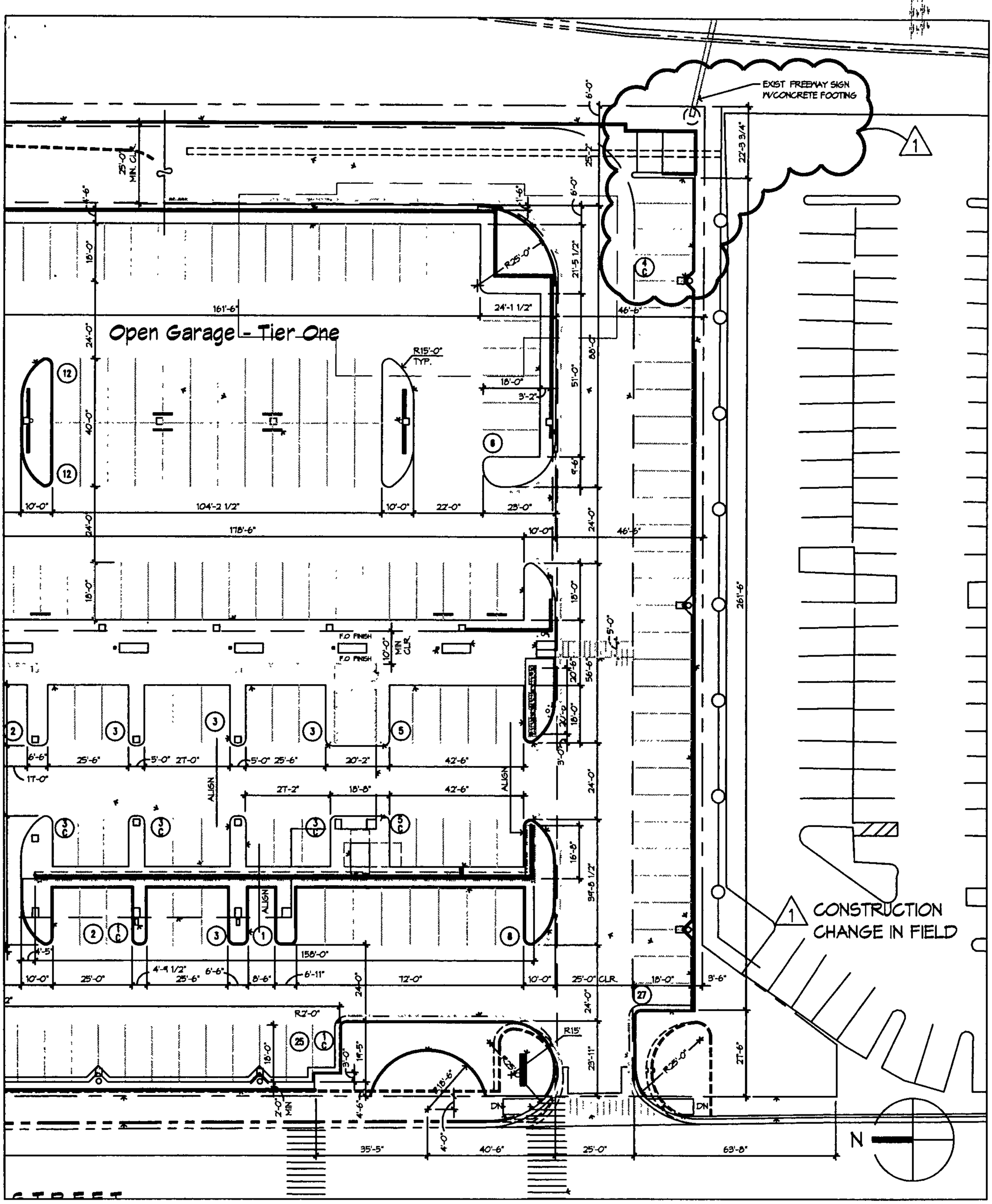

S:\01081-HMOB\wings\Arch\01081_A001 dwg, 07/10/2003 10:59:32 AM, curtis

architecture
interiors
planning
engineering

Dekker/Perich/Sabatini

6801 Jefferson NE
Suite 100
Albuquerque, NM 87109

505 761-9700
fax 761-4222
dps@dpsabq.com

TRAFFIC CIRCULATION LAYOUT

H.I.M.O.B.

502 ELM STREET NE
ALBUQUERQUE, NM 87109

REVISED PARKING LAYOUT

DRAWN BY	DPS	SCALE	NTS
REVIEWED BY	DPS	SKA-052	
DATE ISSUED	7-11-03		
PROJECT NO.	01081	1 NO.	1

332 MURIEL NE, ALBUQUERQUE, NM 87123
PH. (505) 296-7529 FAX. (505) 292-6190
NM Licenses #25282
www.accustripe.com

ACCUSTRIPE, INC

01081
G/COR
7/9/03

Fax and E-Mail

To: Marty Hibbs **From:** DAN MARTINEZ

CC: Curtis Proctor 761-4222

Fax: ~~842-5410~~ 243-9678 **Pages:** 4

Phone: 980-0750 **Date:** 7/9/2003

Re: Heart Institute Medical Office **Job #:** 21636

☐ **Urgent** x **For Review** ☐ **Please Comment** ☐ **Please Reply** ☐ **Please Recycle**

Dear Marty:

This letter is in response to the handicap installation on the ground floor of the parking garage on the above referenced project. I have spoken to Curtis Proctor with Dekker Perich and have explained to him the purpose of our installation at this height. He has asked me to respond back to you and I will fax a copy to him as well.

Please note that our submittal on all signs, including handicapped signs call for mounting height to be 7 ft from the bottom of the sign. This in accordance with the following guidelines:

1. ANSI sec. 4.6.2, "such signs shall not be obscured by a vehicle parked in the space."

✳ 2. Manual of Uniform Traffic Control Devices (MUTCD), "where parking or pedestrian movements occur, the clearance to the bottom of the sign shall be at least 7 ft. (document attached)

3. Americans with Disabilities (ADA) Guidelines—"A sign with the international symbol of accessibility must be located in front of the parking space and mounted high enough so it is not hidden by a vehicle parked in the space." (document attached)

The 7 ft height far exceeds contract drawing details and city requirement, and we recommend this height to eliminate pedestrians cutting themselves on the signs as has been the case in the past. If the lower heights are required, we request a release of liability in case of accidents.

Sincerely,

Dan Martinez
President

ACCUSTRIPE, INC.

Specializing in Parking Lot Striping
332 Muriel N.E.
Albuquerque, NM 87123
(505) 296-7529
FAX (505) 292-6190

Sign Installation: per Manual on Uniform Traffic Control Devices (MUTCD 2000)

ROADSIDE SIGN
RURAL DISTRICT

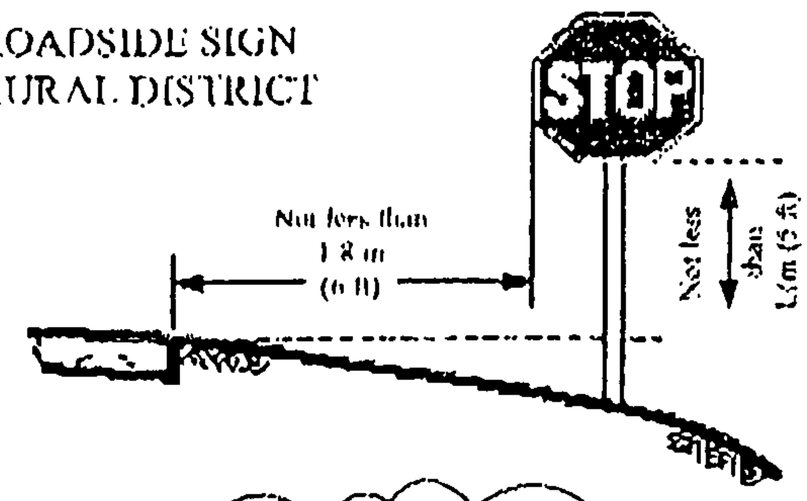

ROADSIDE SIGN
RURAL DISTRICT

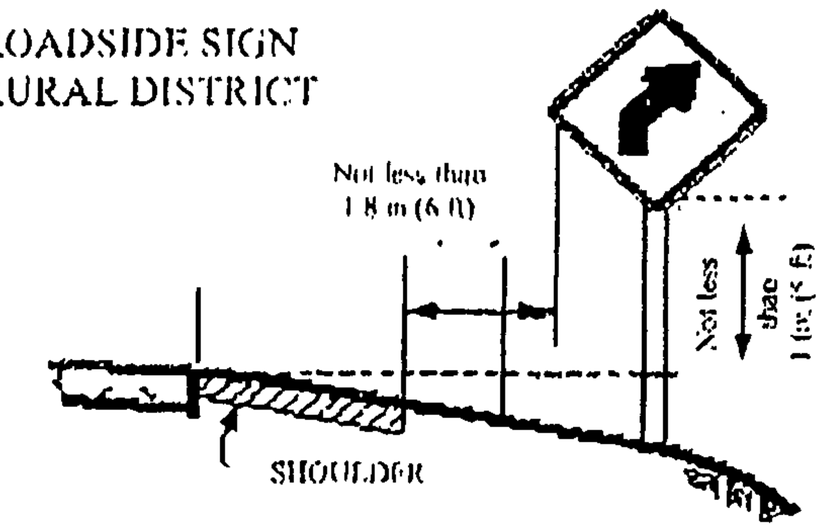

ROADSIDE SIGN
BUSINESS OR
RESIDENCE DISTRICT

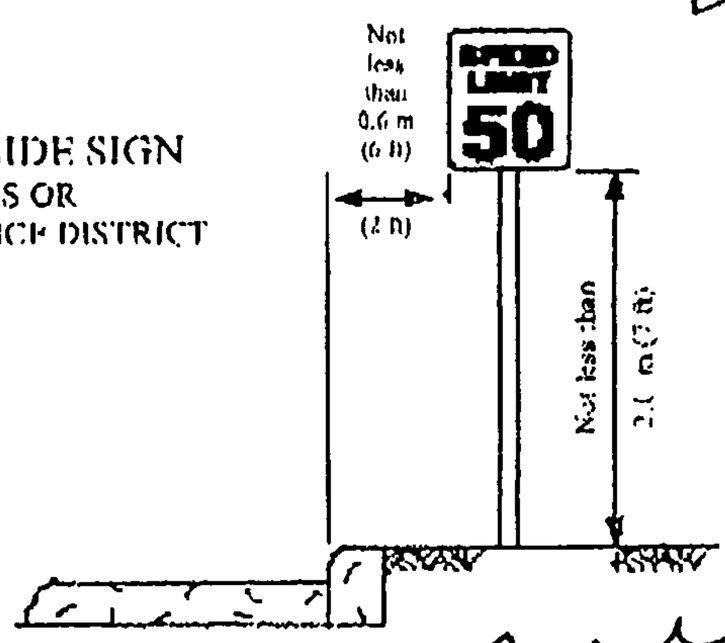

WARNING SIGN
WITH ADVISORY
SPEED PLAQUE
RURAL DISTRICT

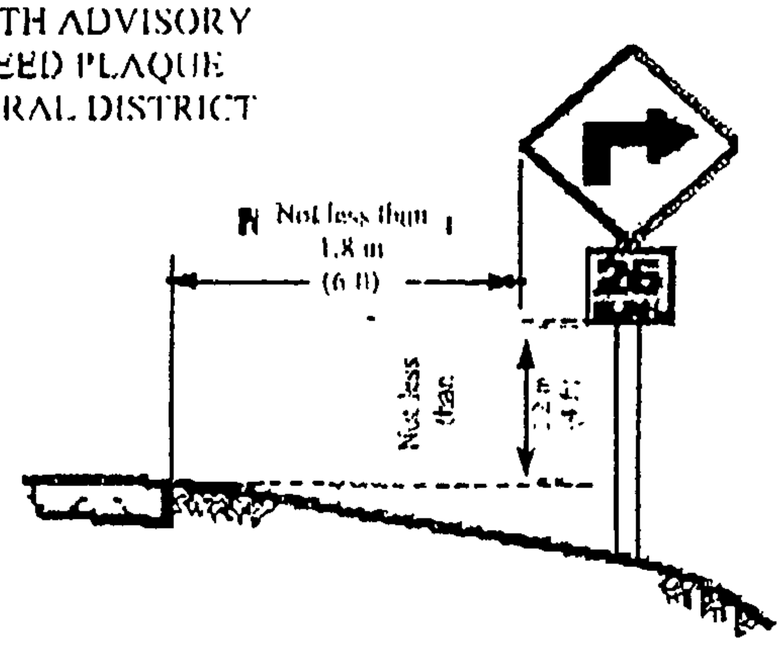

<u>Section 2A.18 Mounting Height</u>
<u>Standard:</u>
Signs installed at the side of the road in rural districts shall be at least 1.5 m (5 ft), measured from the bottom of the sign to the near edge of the pavement. <u>Where parking or pedestrian movements occur, the clearance to the bottom of the sign shall be at least 2.1 m (7 ft).</u>
Directional signs on expressways and freeways shall be installed with a minimum height of 2.1 m (7 ft). If a secondary sign is mounted below another sign, the major sign shall be installed at least 2.4 m (8 ft) and the secondary sign at least 1.5 m (5 ft) above the level of the pavement edge. All route signs, warning signs, and regulatory signs on expressways and freeways shall be at least 2.1 m (7 ft) above the level of the pavement edge.
Overhead signs shall provide a vertical clearance of not less than 5.1 m (17 ft) to the sign, light fixture, or sign bridge, over the entire width of the pavement and shoulders except where a lesser vertical clearance is used for the design of other structures. The vertical clearance to overhead sign structures or supports shall not be greater than 0.3 m (1 ft) in excess of the minimum clearance of other structures.

Accessible Parking

When parking is provided for the public, designated accessible parking spaces must be provided, if doing so is readily achievable. An accessible parking space must have space for the vehicle and an additional space located either to the right or to the left of the space that serves as an access aisle. This aisle is needed to permit a person using a wheelchair, electric scooter, or other mobility device to get out of their car or van. A sign with the international symbol of accessibility must be located in front of the parking space and mounted high enough so it is not hidden by a vehicle parked in the space.

Accessible parking spaces should be the spaces closest to the accessible entrance and be located on level ground. If it is not readily achievable to locate accessible parking in the closest spaces due to sloped pavement or other existing conditions, then the closest level area should be selected. An accessible route must be provided between the access aisle and the accessible building entrance. This route must have no steps or steeply sloped surfaces and it must have a firm, stable, slip-resistant surface.

Van accessible spaces must have an access aisle that is **at least eight-feet wide** and be designated by a sign with the international symbol and "van accessible." There should be a vertical clearance of at least 98 inches on the vehicular route to the space, at the parking space, and along the vehicular route to an exit.

Provide a parking space that is at least 8 feet wide. There should be at least a 98 inch high clearance at the parking space, the adjacent access aisle and along the vehicular route to the space and vehicular exit.

Install a sign with the international symbol of accessibility and "van accessible" and mount it high enough so it is not hidden by the vehicle parked in the space.

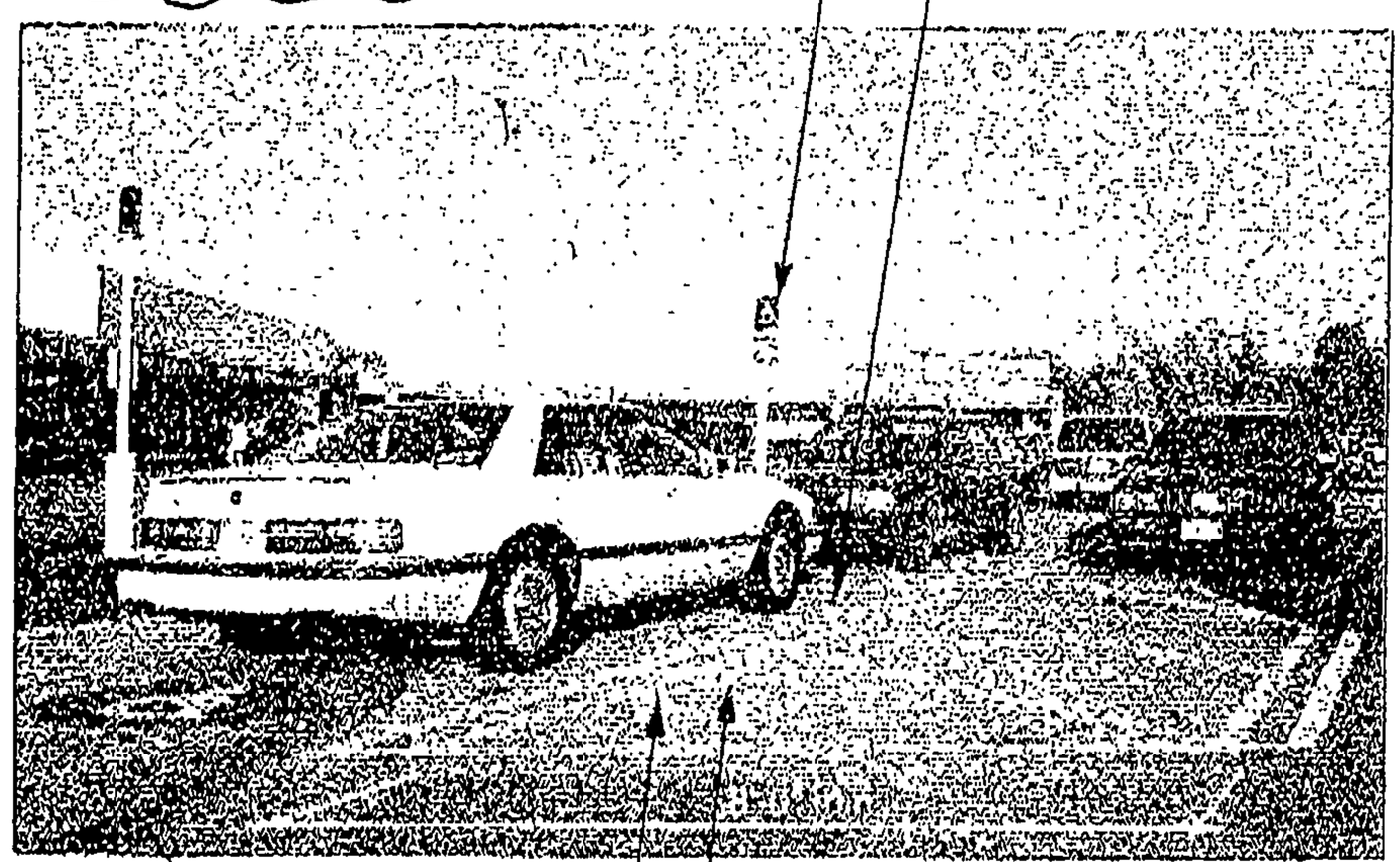

Locate parking space and access aisle so that they are relatively level (1:50 maximum slope in all directions is recommended if readily achievable)

Provide an access aisle that is at least 8 feet wide next to the van parking space to permit a person using a wheelchair or scooter to exit or enter a van with a side-mounted lift.

Provide an accessible route to the accessible entrance(s) to the building - a marked crosswalk may be needed if route crosses vehicular traffic.

A Van Accessible Parking Space

(1 of 8 of all accessible parking spaces, but at least one, must be van accessible
Although designated a van accessible space, cars may use the space too.)

City of Albuquerque
P.O. BOX 1293 ALBUQUERQUE, NEW MEXICO 87103

April 9, 2002

Glenn Broughton, PE
Bohannan Huston, Inc.
7500 Jefferson NE-Courtyard 1
Albuquerque, NM 87109

Re: Heart Institute Medical Hospital Conceptual Grading and Drainage Plan
Engineer's Stamp Dated 4-5-02, (K15/D6F)

Dear Mr. Broughton,

Based on the information contained in your submittal dated 4-5-02, the above referenced plan cannot be approved for Site Plan for Building Permit until the following comments are addressed:

- Are there any offsite flows entering your site from the east frontage road? Also, please quantify these flows.

- Please show all existing public easements and public infrastructures on your plan.

If you have any questions, you can contact me at 924-3982.

Sincerely,

Carlos A. Montoya, PE
City Floodplain Administrator, PWD
Development and Building Services

C: Terri Martin, Hydrology
File (2)

THE CITY OF ALBUQUERQUE IS AN EQUAL OPPORTUNITY/REASONABLE ACCOMMODATION EMPLOYER

DRAINAGE AND TRANSPORTATION INFORMATION SHEET

(REV. 1/11/2002)

K-15/D6F

PROJECT TITLE: Heart Institute Medical Office Building ZONE MAP/DRG. FILE # K-15-Z
DRB #: 1001718 EPC#: 02EPC140 / 02EPC141 WORK ORDER#:

LEGAL DESCRIPTION: Tract 2B, St. Joseph Hospital Complex
CITY ADDRESS: Elm Street north of Martin Luther King Boulevard

ENGINEERING FIRM: Bohannan Huston, Inc. CONTACT: Glenn Broughton
ADDRESS: 7500 Jefferson NE – Courtyard I PHONE: (505) 823-1000
CITY, STATE: Albuquerque, NM ZIP CODE: 87109

OWNER: CONTACT:
ADDRESS: PHONE:
CITY, STATE: ZIP CODE:

ARCHITECT: Dekker/Perich/Sabatini CONTACT: Tim Grattan
ADDRESS: 6801 Jefferson NE – Suite 100 PHONE:
CITY, STATE: Albuquerque, NM ZIP CODE: 87109

SURVEYOR: CONTACT:
ADDRESS: PHONE:
CITY, STATE: ZIP CODE:

CONTRACTOR: CONTACT:
ADDRESS: PHONE:
CITY, STATE: ZIP CODE:

CHECK TYPE OF SUBMITTAL:

- ____ DRAINAGE REPORT
- ____ DRAINAGE PLAN
- X CONCEPTUAL GRADING & DRAINAGE PLAN
- ____ GRADING PLAN
- ____ EROSION CONTROL PLAN
- ____ ENGINEER'S CERTIFICATION (HYDROLOGY)
- ____ CLOMR/LOMR
- ____ TRAFFIC CIRCULATION LAYOUT (TCL)
- ____ ENGINEERS CERTIFICATION (TCL)
- ____ ENGINEERS CERTIFICATION (DRB APPR. SITE PLAN)
- ____ OTHER

CHECK TYPE OF APPROVAL SOUGHT:

- ____ SIA / FINANCIAL GUARANTEE RELEASE
- ____ PRELIMINARY PLAT APPROVAL
- ____ S. DEV. PLAN FOR SUB'D. APPROVAL
- X S. DEV. PLAN FOR BLDG. PERMIT APPROVAL
- ____ SECTOR PLAN APPROVAL
- ____ FINAL PLAT APPROVAL
- ____ FOUNDATION PERMIT APPROVAL
- ____ BUILDING PERMIT APPROVAL
- ____ CERTIFICATE OF OCCUPANCY (PERM.)
- ____ CERTIFICATE OF OCCUPANCY (TEMP.)
- ____ GRADING PERMIT APPROVAL
- ____ PAVING PERMIT APPROVAL
- ____ WORK ORDER APPROVAL
- ____ OTHER (SPECIFY)

WAS A PRE-DESIGN CONFERENCE ATTENDED:

- ____ YES
- ____ NO
- ____ COPY PROVIDED

RECEIVED
APR 05 2002
HYDROLOGY SECTION

DATE SUBMITTED: April 5, 2002 BY: Glenn S. Broughton, P.E.

Requests for approvals of Site Development Plans and/or Subdivision Plats shall be accompanied by a drainage submittal. The particular nature , location and scope of the proposed development defines the degree of drainage detail. One or more of the following levels of submittal may be required based on the following:

1. **Conceptual Grading and Drainage Plan:** Required for approval of Site Development Plans greater than five (5) acres and Sector Plans.
2. **Drainage Plans:** Required for building permits, grading permits, paving permits and site plans less than five (5) acres.
3. **Drainage Report:** Required for subdivisions containing more than ten (10) lots or constituting five (5) acres or more.

April 5, 2002

BOHANNAN-HUSTON, INC

Courtyard One

7500 JEFFERSON NE

Albuquerque

NM 87109-4335

voice 505 823 1000

fax 505 798 7988

Brad Bingham, P.E.
City of Albuquerque – Hydrology
P. O. Box 1293
Albuquerque, NM 87103

Re: Heart Institute Medical Office Building, Tract 2B, St. Joseph Hospital Medical Complex

Dear Brad:

Enclosed for your review are the Drainage Information Sheet and Conceptual Grading and Drainage Plan for the referenced project. This grading and drainage plan submittal is in support of the site development plan for building permit approval.

The project is located within the St. Joseph Hospital Medical Complex on the east side of Elm Street one block north of Martin Luther King Boulevard. The total area of the site is approximately 2.33 acres and has been analyzed as a single drainage basin. The site is currently paved, with some landscape areas. Under existing conditions, the site drains westerly and free discharges 10.6cfs to Elm Street. Proposed development conditions will not increase overall discharge from this site. See the attached grading and drainage form for calculations.

If you have any questions regarding this submittal, please call me at 823-1000.

Sincerely,
Bohannan Huston, Inc.

Glenn Broughton, P.E.
Community Development and Planning Group

GB/am
Enclosures

RECEIVED
APR 05 2002
HYDROLOGY SECTION

P \020227\cdp\corres\DRB Hydrology Submittal doc

Bohannan ▲ Huston

CLIENT/COURIER TRANSMITTAL

OHANNAN HUSTON
ourtyard One
500 JEFFERSON NE
.lbuquerque
IEW MEXICO 87109
oice 505.823.1000
ax 505.798.7988

To: Brad Bingham
COA - Hydrology
600 2nd Street NW - 2nd Floor

phone: 924-3986

Requested By: Glenn Broughton / am

Date: **April 5, 2002**

Time Due: ☐ **This A.M.** ☒ **This P.M.**
☐ **Rush** ___ ☐ **Tomorrow**

Job No.: 02 0227 002

Job Name: Heart Institute Medical Office Building

DELIVERY VIA

☒ **Courier** ☐ **Federal Express**
☐ **Mail** ☐ **UPS**
☐ **Other** _____

PICK UP

Item: _____
_____

ITEM NO.	QUANTITY	DESCRIPTION
1	1	Letter dated 4/5/02 re: Drainage Information Sheet and Conceptual Grading & Drainage Plan.

COMMENTS / INSTRUCTIONS

RECEIVED
APR 05 2002
HYDROLOGY SECTION

REC'D BY: _____ ***DATE:*** _____ ***TIME:*** 1:15

97-3404

HEART HOSPITAL OF NEW MEXICO
DRAINAGE REPORT

BOHANNAN HUSTON

Courtyard One

7500 JEFFERSON NE

Albuquerque

NEW MEXICO 87109

voice 505 823 1000

fax 505 821 0892

JUNE 9, 1998

PREPARED FOR:

ST. JOSEPH MEDICAL CENTER
C/O FLATOW MOORE SHAFFER MCCABE
P.O. BOX 8266
ALBUQUERQUE, NM 87198

DRAINAGE REPORT
FOR
HEART HOSPITAL OF NEW MEXICO

JUNE 9, 1998

Prepared for:

St. Jospeh Medical Center
c/o Flatow Moore Shaffer McCabe
P.O. Box 8266
Albuquerque, NM 87198

Prepared by:

Bohannan Huston
7500 Jefferson NE
Courtyard I
Albuquerque, NM 87109

PREPARED BY:

Bruce Stidworthy 6/11/98

Bruce Stidworthy, E.I. Date

UNDER THE SUPERVISION OF:

JAMES R. TOPMILLER NEW MEXICO 9354 REGISTERED PROFESSIONAL ENGINEER

6/9/98

James R. Topmiller, P.E. Date

P \97423\cdp\a04-final-grade-dm\reports\Heart Hospital drainage report.doc

TABLE OF CONTENTS

PAGE

I. INTRODUCTION 1

II. PURPOSE 1

III. METHODOLOGIES AND REFERENCES 1

IV. SUMMARY OF RELATED PLATTING/SITE DEVELOPMENT PLAN ACTIONS 2

V. SITE LOCATION AND CHARACTERISTICS 2

VI. EXISTING CONDITIONS 2

VII. PROPOSED CONDITIONS 3

VIII. CONCLUSION 4

FIGURES

FIGURE 1 - VICINITY MAP

FIGURE 2 - LETTER FROM JAMES TOPMILLER TO FRED AGUIRRE, DATED APRIL 30, 1998

APPENDICES

APPENDIX 1 - EXISTING CONDITION ONSITE HYDROLOGIC CALCULATIONS

APPENDIX 2 - EXISTING CONDITION OFFSITE CALCULATIONS (PROVIDED IN SUPPORT OF FINAL PLAT APPROVAL)

APPENDIX 3 - PROPOSED CONDITION HYDROLOGIC CALCULATIONS

APPENDIX 4 - PROPOSED CONDITION HYDRAULIC CALCULATIONS

APPENDIX 5 - APPROVED INFRASTRUCTURE LIST, WITH ATTACHMENTS

APPENDIX 6 - EPC FINDINGS AND CONDITIONS

TABLE OF CONTENTS (continued)

EXHIBITS

PLATE 1 - FINAL DRAINAGE/GRADING PLAN

PLATE 2 - EXISTING CONDITIONS BASIN MAP FOR HEART HOSPITAL SITE

PLATE 3 - EXISTING CONDITIONS BASIN MAP FOR ST. JOSEPH MEDICAL COMPLEX (PROVIDED IN SUPPORT OF FINAL PLAT APPROVAL)

PLATE 4 - PROPOSED CONDITIONS BASIN MAP

PLATE 5 - PLAT

I. INTRODUCTION

The purpose of this report is to provide a Drainage Management Plan for the proposed development of a New Heart Hospital, on the grounds of St. Joseph Medical Complex, in downtown Albuquerque. This building is to be constructed on land which is currently a paved parking lot located North of Martin Luther King Boulevard, and between Elm Street and Interstate 25. The site is currently legally described as Tract 2, St. Joseph Hospital Complex. Under the replat currently before the DRB, the new legal description will be Tract 2B, St. Joseph Medical Complex.

The St. Joseph organization also plans to construct a parking structure on the west side of Elm Street. The project will require a separate building permit and hydrology approval of the parking structure building permit will be sought with a separate submittal.

II. PURPOSE

This report and the final grading plan are submitted for Hydrology Division review for the purpose of obtaining building permit approval for the Heart Hospital of New Mexico, as well as final plat approval (DRB 98-97). The majority of this report focuses on the normal drainage report requirements for building permit approval for a commercial site. However, Section VI.B., "Existing Conditions, Offsite," is included in order to receive final plat approval. Also included in this report in order to support final plat approval is Plate 3 - "Existing Conditions Basin Map for St. Joseph Medical Complex." No variances are requested with this submittal.

III. METHODOLOGIES AND REFERENCES

This report is prepared in accordance with DPM criteria , specifically the procedure outlined in DPM Section 22.2.A. No AHYMO analysis was done for this site.

IV. SUMMARY OF RELATED PLATTING/SITE DEVELOPMENT PLAN ACTIONS

A site development plan for this project was presented to and approved (with findings and conditions, included in Appendix 6 of this report) by the EPC on February 5, 1998 as Case Number Z-98-8. Subsequently, the Site Development Plan and preliminary/final plat were heard by the DRB on May 12th, as Case # 98-97. The Site Development plan was delegated while the preliminary plat was approved, and the infrastructure list was signed off. We anticipate submitting the SIA package within the first two weeks of June. With approval of the SIA and this report, we will request final plat approval by the DRB.

V. SITE LOCATION AND CHARACTERISTICS

This site is located North of Martin Luther King Boulevard, and between Elm Street and Interstate 25. The site is currently a paved parking lot with no landscaping islands. The site drains to the west to the Elm Street Public right-of-way.

VI. EXISTING CONDITIONS

A. Onsite

Currently, the site is primarily a paved parking lot sloping from east to west. The very eastern edge of the site is a sloped at 5:1 or greater from the existing parking lot to the Interstate 25 right-of-way line. The existing parking lot does not contain any landscaped islands, and is therefore 100% land treatment "D" as described in Table A-4 of the DPM Section 22.2.

Under existing conditions, the drainage from the site surface flows to the Elm Street right-of-way on the west boundary of the site. Currently a high point exists in Elm Street just south of the new entrance to the Heart Hospital. The existing conditions basin map shows that the entire proposed site drains to Elm Street, north of the high point. Public waters in Elm Street flow north to High Street, then west on High Street to a series of inlets on both sides of the road at the intersection of Fruit Avenue.

B. Offsite

The purpose of this section of this report is to provide additional documentation of existing drainage conditions in the area of the easement to be vacated with the final plat (see letter from James Topmiller to Fred Aguirre, dated April 30, 1998 included as Figure 2). This documentation has been required by Mr. Fred Aguirre of the City of Albuquerque Hydrology Section as a condition of approval of the final plat. Accordingly, several concerns which Mr. Aguirre raised are addressed below.

The first issue was to determine if vacated Marquette Avenue with its current narrow roadway section has adequate capacity. The calculations provided in Appendix 2 (Steps 1 through 11) verify that the existing roadway section does have sufficient capacity. Please note that proposed conditions do not generate any additional flows, and therefore the existing roadway section has adequate capacity under proposed conditions as well.

The second issue was to demonstrate that the existing drainage easement, which is being vacated by the proposed plat, is not required for surface drainage. The calculations mentioned above (provided to satisfy the first issue) demonstrate that the easement is not required to convey flows from Marquette Avenue. Furthermore, the site development plan calls for the parking structure to be constructed over the easement, therefore, the final grades at the south end of the existing easement will keep the water in Marquette.

The third issue was to verify that the proposed realignment of the storm drain (ee pullout map in Appendix 2) has enough capacity. A Hydraulic Grade Line Analysis, which shows that the proposed line can carry the flows, has been included in Appendix 2.

VII. PROPOSED CONDITIONS

The proposed development consists of a new Heart Hospital with associated parking and driveways. Please refer to the enclosed Grading/Drainage Plan (rear pocket) and the Drainage Basins Map. The proposed construction does not increase the overall discharge from the St. Joseph Medical Center.

As under Existing Conditions (described in the section above), the site will collect flows and discharge them in a westerly direction to existing the existing Elm Street right of way. Proposed on-site Basins 1 through 7 and off-site Basins 01 through 03 (total Q_{100} of 24.2 cfs) are collected by onsite underground storm drains and discharged to the surface just east of the Elm Street right of way. The storm drain pipe daylights via a new flared end section, which connects to a concrete rundown, leading to three new 24" sidewalk culverts. The sidewalk culverts are designed to carry the 10-year storm (Q_{10} = 15.5 cfs) under the existing sidewalk. The 100-year storm (will safely enter the public street by overflowing the sidewalk. The remaining Basins 8 through 12 enter Elm Street by surface flow through the two site entrances.

All of the proposed hydraulics for the new facilities shown on the grading plan are analyzed in the Proposed Hydraulics section, Appendix 4. Please note that much of the new onsite storm drain operates under low pressure flow. A hydraulic grade line analysis is provided in Appendix 2.

VIII. CONCLUSION

This report has given a comprehensive drainage management plan for the proposed development that complies with the DPM and drainage ordinance. It is recommended that with this submittal final plat and building permit approvals be granted.

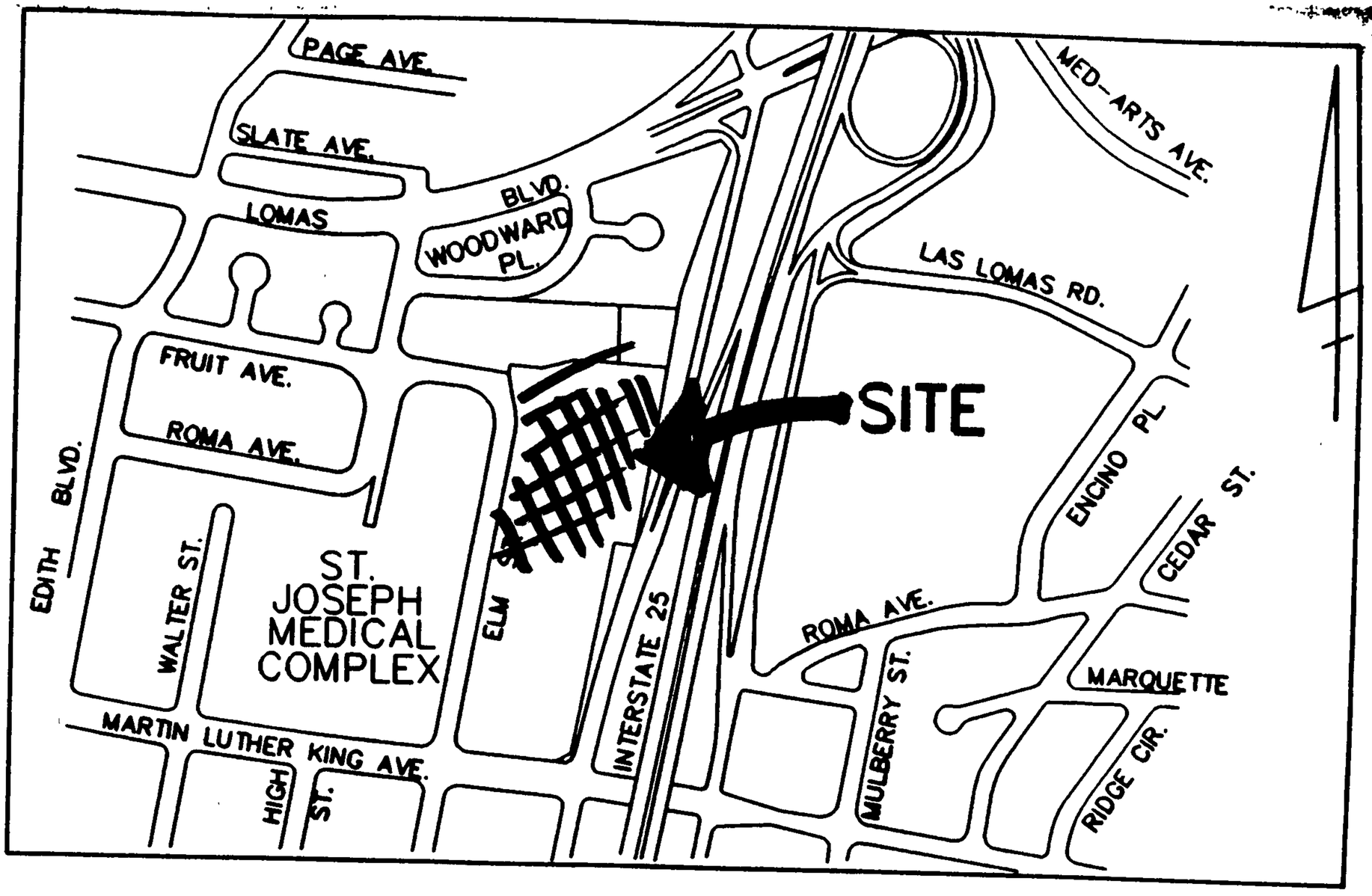

VICINITY MAP

ZONE ATLAS MAP No. J-15-Z & K-15-Z

LEGAL DESCRIPTION

TRACTS 1 AND 2 AND THE ENTIRETY OF BLOCK 9, ST. JOSEPH HOSPITAL COMPLEX.

FIGURE 1

DRAINAGE AND TRANSPORTATION INFORMATION SHEET

(REV. 1/28/2003rd)

K-15/D68

PROJECT TITLE: HEART INSTITUTE MEDICAL OFFICE BUILDING ZONE MAP/DRG. FILE #: [illegible]
DRB #: 02DRB-00533 EPC#: 02EPC 00140 WORK ORDER#:

LEGAL DESCRIPTION: TRACT 2B1 ST. JOSEPHS MEDICAL CAMPUS
CITY ADDRESS: 502 ELM ST NE 87102

ENGINEERING FIRM: CONTACT:
ADDRESS: PHONE:
CITY, STATE: ZIP CODE:

OWNER: HEART OFFICE LLC CONTACT: JACK WESTMAN
ADDRESS: 4600B MONTGOMERY BLVD STE 103 PHONE: 883-5221
CITY, STATE: ALBUQUERQUE, NM 87109 ZIP CODE:

ARCHITECT: DEKKER PERICH SABATINI CONTACT: CURTIS PROCTOR
ADDRESS: 6801 JEFFERSON BLVD #100 PHONE: 761-9700
CITY, STATE: ALBUQUERQUE, NM ZIP CODE: 87109

SURVEYOR: CONTACT:
ADDRESS PHONE:
CITY, STATE: ZIP CODE:

CONTRACTOR: BRADBURY STAMM CONSTRUCTION CONTACT: MARTY HIBBS
ADDRESS: 3701 PASEO DEL NORTE PHONE: 765-1200
CITY, STATE: ALBUQUERQUE, NM ZIP CODE: 87184

CHECK TYPE OF SUBMITTAL:

- ____ DRAINAGE REPORT
- ____ DRAINAGE PLAN 1st SUBMITTAL, ***REQUIRES TCL or equal***
- ____ DRAINAGE PLAN RESUBMITTAL
- ____ CONCEPTUAL GRADING & DRAINAGE PLAN
- ____ GRADING PLAN
- ____ EROSION CONTROL PLAN
- ____ ENGINEER'S CERTIFICATION (HYDROLOGY)
- ____ CLOMR/LOMR
- X TRAFFIC CIRCULATION LAYOUT (TCL)
- ____ ENGINEERS CERTIFICATION (TCL)
- ____ ENGINEERS CERTIFICATION (DRB APPR. SITE PLAN)
- ____ OTHER

CHECK TYPE OF APPROVAL SOUGHT:

- ____ SIA / FINANCIAL GUARANTEE RELEASE
- ____ PRELIMINARY PLAT APPROVAL
- ____ S. DEV. PLAN FOR SUB'D. APPROVAL
- ____ S. DEV. PLAN FOR BLDG. PERMIT APPROVAL
- ____ SECTOR PLAN APPROVAL
- ____ FINAL PLAT APPROVAL
- ____ FOUNDATION PERMIT APPROVAL
- ____ BUILDING PERMIT APPROVAL
- X CERTIFICATE OF OCCUPANCY (PERM.)
- ____ CERTIFICATE OF OCCUPANCY (TEMP.)
- ____ GRADING PERMIT APPROVAL
- ____ PAVING PERMIT APPROVAL
- ____ WORK ORDER APPROVAL
- ____ OTHER (SPECIFY)

WAS A PRE-DESIGN CONFERENCE ATTENDED:

- ____ YES
- X NO
- ____ COPY PROVIDED

RECEIVED JUL 18 2003 HYDROLOGY SECTION

DATE SUBMITTED: BY:

Requests for approvals of Site Development Plans and/or Subdivision Plats shall be accompanied by a drainage submittal. The particular nature , location and scope ot the proposed development defines the degree of drainage detail. One or more of the following levels of submittal may be required based on the following:

1. **Conceptual Grading and Drainage Plan**: Required for approval of Site Development Plans greater than five (5) acres and Sector Plans.
2. **Drainage Plans**: Required for building permits, grading permits, paving permits and site plans less than five (5) acres.
3. **Drainage Report**: Required for subdivisions containing more than ten (10) lots or constituting five (5) acres or more.

Dekker/Perich/Sabatini
architecture
interiors
planning
engineering

July 18, 2003

Mr. Richard Dourte
City of Albuquerque
Public Works Department - Transportation Development Services Section
Albuquerque, New Mexico 87103

Re: Architect's Certification for Permanent C.O.
Heart Institute Medical Office Building
502 Elm Street
Albuquerque, NM 87102
Case No. 1000596

Dear Mr. Dourte:

Attached is a copy of the approved Second Amended Site Plan for Subdivision. Our office has visited the site at regular intervals appropriate to the stages of construction. Such visits and observations are not intended to be an exhaustive check or detailed inspection of the Contractor's work but rather are to allow our office, as experienced professionals, to become generally familiar with the work in progress and to determine, in general, if the work is proceeding in accordance with the Contact Documents.

Based on our observations we hereby certify that this site has been constructed in substantial compliance with the approved Second Amended Site Plan for Subdivision, with the only two notable exceptions:

1. Trash Enclosure relocation:
   The trash enclosure was moved 2'-0" west to avoid undermining the concrete footing of an existing overhead highway sign. As a result, four parking stalls were stripped as compact stalls instead of standard stalls. This change increased our total from 45 compact stalls to 49. Our maximum allowable is 66 compact stalls. (see enclosures)
2. Height of ADA signage:
   We have pole-mounted signage in the public way. As per ADA the signage was designed to be mounted at 5'-0" above finish grade. However, the signage was mounted at 7'-0" above finish grade due to a stipulation in the Manual of Uniform Traffic Control Devices, which allows for signage in the public way to be mounted at 7'-0", to avoid injury to pedestrians. (see enclosures)

If you have any concerns or questions regarding this, please fell free to contact us.

Sincerely,

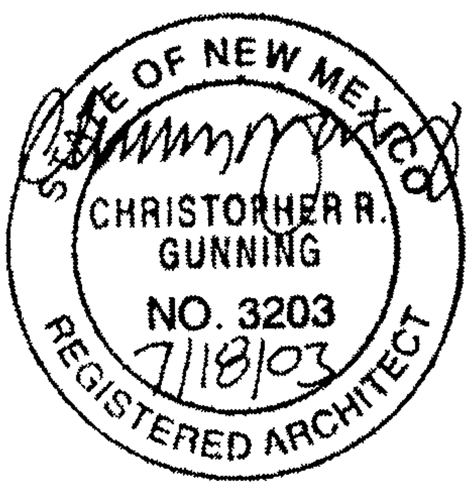

Christopher R. Gunning, AIA
Principal
Dekker/Perich/Sabatini

S \02057 NMEAF\General\Correspondence\L-TCLcert 2003-7-18 doc

Dekker/Perich/Sabatini
architecture
interiors
planning
engineering

Cc: Jack Westman, Heart Office LLC
Marty Hibbs, BradburyStamm Construction
Bob Golden, BradburyStamm Construction
file

Enclosures

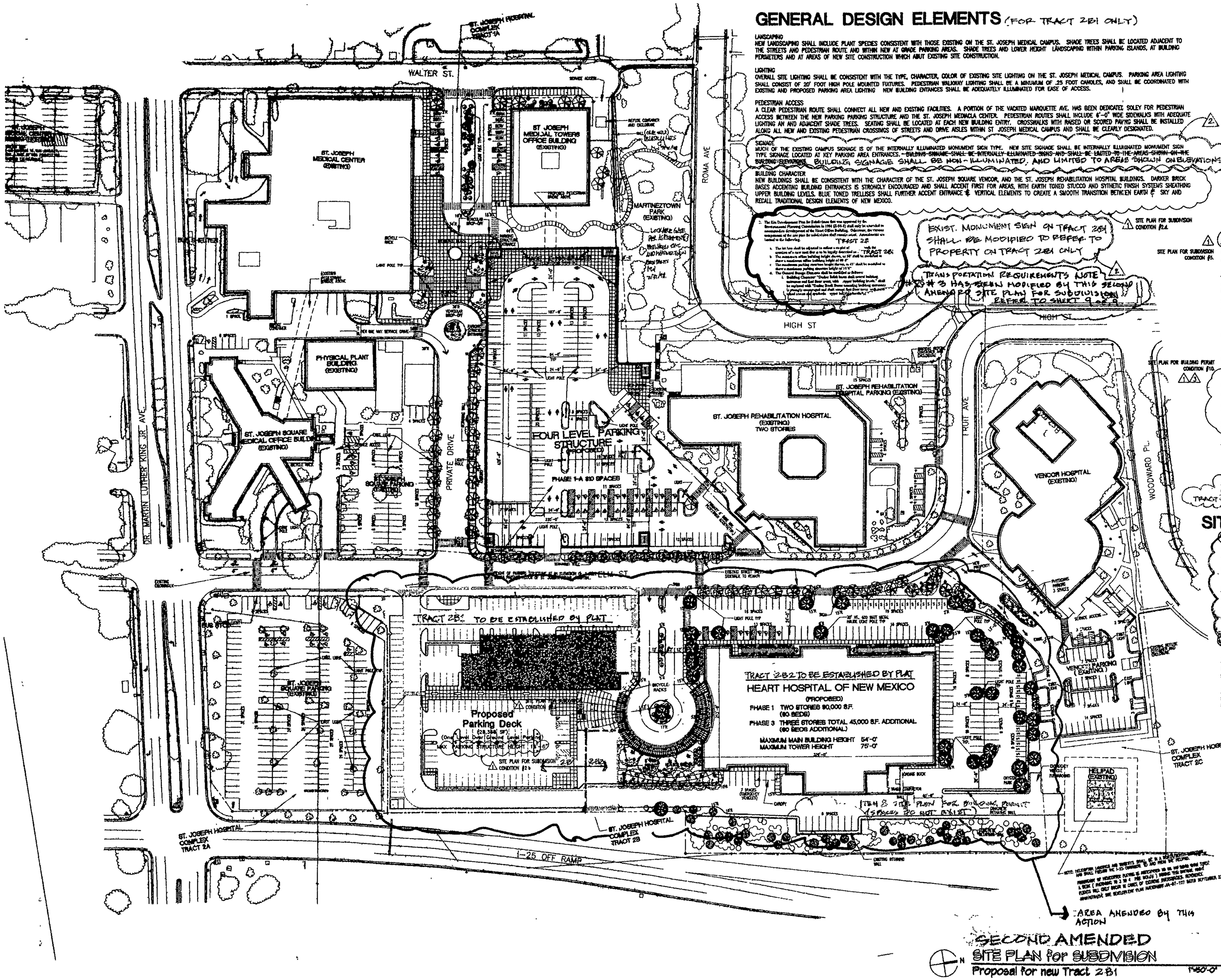

GENERAL DESIGN ELEMENTS (FOR TRACT 2B1 ONLY)

LANDSCAPING
NEW LANDSCAPING SHALL INCLUDE PLANT SPECIES CONSISTENT WITH THOSE EXISTING ON THE ST. JOSEPH MEDICAL CAMPUS. SHADE TREES SHALL BE LOCATED ADJACENT TO THE STREETS AND PEDESTRIAN ROUTE AND WITHIN NEW AT GRADE PARKING AREAS. SHADE TREES AND LOWER HEIGHT LANDSCAPING WITHIN PARKING ISLANDS, AT BUILDING PERIMETERS AND AT AREAS OF NEW SITE CONSTRUCTION WHICH ABUT EXISTING SITE CONSTRUCTION.

LIGHTING
OVERALL SITE LIGHTING SHALL BE CONSISTENT WITH THE TYPE, CHARACTER, COLOR OF EXISTING SITE LIGHTING ON THE ST. JOSEPH MEDICAL CAMPUS. PARKING AREA LIGHTING SHALL CONSIST OF 20' FOOT HIGH POLE MOUNTED FIXTURES. PEDESTRIAN WALKWAY LIGHTING SHALL BE A MINIMUM OF .25 FOOT CANDLES, AND SHALL BE COORDINATED WITH EXISTING AND PROPOSED PARKING AREA LIGHTING NEW BUILDING ENTRANCES SHALL BE ADEQUATELY ILLUMINATED FOR EASE OF ACCESS.

PEDESTRIAN ACCESS
A CLEAR PEDESTRIAN ROUTE SHALL CONNECT ALL NEW AND EXISTING FACILITIES. A PORTION OF THE VACATED MARQUETTE AVE. HAS BEEN DEDICATED SOLEY FOR PEDESTRIAN ACCESS BETWEEN THE NEW PARKING PARKING STRUCTURE AND THE ST. JOSEPH MEDIACLA CENTER. PEDESTRIAN ROUTES SHALL INCLUDE 8'-0" WIDE SIDEWALKS WITH ADEQUATE LIGHTING AN AND ADJACENT SHADE TREES. SEATING SHALL BE LOCATED AT EACH NEW BUILDING ENTRY. CROSSWALKS WITH RAISED OR SCORED PAVING SHALL BE INSTALLED ALONG ALL NEW AND EXISTING PEDESTRIAN CROSSINGS OF STREETS AND DRIVE AISLES WITHIN ST. JOSEPH MEDICAL CAMPUS AND SHALL BE CLEARLY DESIGNATED.

SIGNAGE
MUCH OF THE EXISTING CAMPUS SIGNAGE IS OF THE INTERNALLY ILLUMINATED MONUMENT SIGN TYPE. NEW SITE SIGNAGE SHALL BE INTERNALLY ILLUMINATED MONUMENT SIGN TYPE SIGNAGE LOCATED AT KEY PARKING AREA ENTRANCES. ~~BUILDING SIGNAGE SHALL BE INTERNALLY ILLUMINATED SIGNS AND SHALL BE LIMITED TO THE AREAS SHOWN ON THE BUILDING ELEVATIONS.~~ BUILDING SIGNAGE SHALL BE NON-ILLUMINATED, AND LIMITED TO AREAS SHOWN ON ELEVATIONS.

BUILDING CHARACTER
NEW BUILDINGS SHALL BE CONSISTENT WITH THE CHARACTER OF THE ST. JOSEPH SQUARE VENDOR, AND THE ST. JOSEPH REHABILITATION HOSPITAL BUILDINGS. DARKER BRICK BASES ACCENTING BUILDING ENTRANCES IS STRONGLY ENCOURAGED AND SHALL ACCENT FIRST FOR AREAS, WITH EARTH TONED STUCCO AND SYTHETIC FINISH SYSTEMS SHEATHING UPPER BUILDING LEVELS. BLUE TONED TRELLISES SHALL FURTHER ACCENT ENTRANCE & VERTICAL ELEMENTS TO CREATE A SMOOTH TRANSITION BETWEEN EARTH & SKY AND RECALL TRADITIONAL DESIGN ELEMENTS OF NEW MEXICO.

2. The Site Development Plan for Subdivision was approved by the Environmental Planning Commission in 1991 (EPC-91-1) and only is intended to accommodate development of the Heart Office Building. Otherwise, the various components of the site plan for subdivision shall remain valid. Amendments are limited to the following:
   a. The lot line shall be adjusted to reflect a re-plat of the property as a result of a new parcel that is to be legally established as ~~TRACT 2B1~~ TRACT 2B2.
   b. The maximum allowable building height for the new 2B1 shall be established at 54' to the top of the roof.
   c. The maximum allowable structure height for the new 2B1 shall be established at three a maximum parking structure height of 15'6".
   d. The Planned Range Elements shall be modified as follows:
      i. Building Character: "Darker brick bases shall accent building entrances and land front areas, with upper building levels." shall be replaced with "Darker brick bases remaining building entrances and land front areas, with upper building levels." shall be replaced with "Darker brick bases shall accent first floor areas, with upper building levels."

EXIST. MONUMENT SIGN ON TRACT 2B1 SHALL BE MODIFIED TO REFER TO PROPERTY ON TRACT 2B1 ONLY

TRANSPORTATION REQUIREMENTS NOTE #3 HAS BEEN MODIFIED BY THIS SECOND AMENDED SITE PLAN FOR SUBDIVISION REFER TO SHEET 9 OF 9

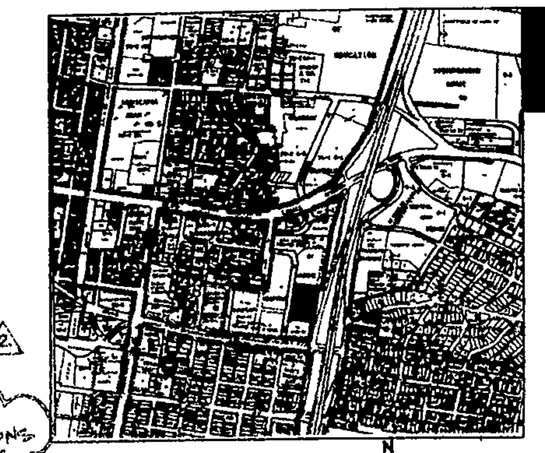

VICINITY MAP

J14,J15,K14,K15 1"=750'-0"

PARKING INFORMATION

HEART HOSPITAL PARKING CALCULATIONS (TRACT 2B2) — SITE PLAN FOR SUBDIVISION CONDITION #5.

REQUIRED SPACES (60 BED HOSPITAL)	30
CONFIRMED EXISTING SPACES	125

HEART INSTITUTE OFFICE BUILDING (TRACT 2B1 PARKING REQUIREMENTS)

OFFICES
(CITY ZONING CODE PART 3, SECTION 14-16-3-1, PARAGRAPH A21)

FIRST FLOOR: 6,150 GSF x .85 = 5,227.5 NSF/200 =	26
SECOND FLOOR: 15,800 GSF x .85 = 13,260 NSF/300 =	44
THIRD FLOOR: 14,800 GSF x .85 = 12580 NSF/300 =	42
PARKING SPACES REQUIRED	~~112~~
10% ALBUQUERQUE TRANSIT SYSTEM REDUCTION	10%
TOTAL PARKING SPACES REQUIRED (INCLUDING, 8 ACCESSIBLE, WITH 1 VAN ACCESSIBLE)	101

SITE PLAN FOR SUBDIVISION CONDITION #5.

MODIFIED DURING CONSTRUCTION PER LETTER 7/18/03

SITE PLAN FOR BUILDING PERMIT CONDITION #10.

TOTAL PARKING SPACES PROVIDED: (183 + 83) (INCLUDING, 8 ACCESSIBLE, WITH 4 VAN ACCESSIBLE)	266
COMPACT SPACES ALLOWED: 266 x 25%	66
COMPACT SPACES PROVIDED:	45

ALL COMPACT PARKING SPACES WILL BE 8'-0"W x 20'-0"L MIN. FOR TRACT 2B1.

BICYCLE PARKING REQUIREMENTS
TOTAL BICYCLE SPACES REQUIRED: 101/20 = 5
TOTAL BICYCLE SPACES PROVIDED: 5 — SITE PLAN FOR SUBDIVISION CONDITION #2a.

PARKING & ACCESS EASEMENT
CROSS PARKING AND CROSS ACCESS EXSMENTS BETWEEN TRACT 2B2 (HEART HOSPITAL) AND TRACT 2B1 (HEART INSTITUTE OFFICE BUILDING) SHALL BE ESTABLISHED BY PLAT.

SITE INFORMATION

SITE PLAN FOR SUBDIVISION CONDITION #5.

HEART HOSPITAL SITE CALCULATIONS (TRACT 2B2)

TOTAL BUILDING SQUARE FOOTAGE	57,328
TOTAL SITE SQUARE FOOTAGE	213,494.4 SF (4.9 ACRES)
FAR	.27

HEART INSTITUTE MEDICAL OFFICE BUILDING (TRACT 2B1)

TOTAL BUILDING SQUARE FOOTAGE	36,650
TOTAL SITE SQUARE FOOTAGE	101,285.5 SF (2.32 ACRES)
FAR	.36
PARKING DECK SQUARE FOOTAGE	28,765

SITE LIGHTING
PEDESTRIAN WALKWAY LIGHTING SHALL BE A MINIMUM OF .25 FOOTCANDLES AND SHALL BE COORDINATED WITH EXISTING & PROPOSED PARKING AREA LIGHTING.

LANDSCAPING
REFER TO SHEET 7 OF THIS SUBMITTAL FOR ADDITIONAL INFORMATION ON EXISTING LANDSCAPING CONDITIONS

LEGEND

EXISTING PROPERTY LINES AS PER LATEST PLAT
PROPOSED PROPERTY LINE

02EPC 00140
02 DRB - 00533

CASE NUMBER: 1000596

THIS SITE DEVELOPMENT PLAN IS CONSISTENT WITH THE PLAN APPROVED AT THE March 22 2002 ENVIRONMENTAL PLANNING COMMISSION HEARING.

7-17-02 TRAFFIC ENGINEER, TRANSPORTATION DIVISION
6/26/02 CITY ENGINEER/AMAFCA
6/26/02 PUBLIC WORKS, UTILITY DIVISION
6/26/02 DESIGN AND DEVELOPMENT DEPARTMENT, CIP PARKS AND RECREATION
7/25/02 CITY PLANNING, PLANNING DIVISION
7/24/02

Dekker Perich Sabatini
engineers
6801 Jefferson
Suite 100
Albuquerque, NM
505 761-9700
fax 761-4222
dps@dpsabq.com
ARCHITECT
ENGINEER

DRB submittal
JUNE 26, 2002

HEART INSTITUTE MEDICAL OFFICE BUILDING

REVISIONS
1 4-1-02 EPC FINDINGS & CONDITIONS B-2
2 6-19-02 HEIGHT & PARK. REQ. 1094
3 6-26-02 ARCHITECT REVISIONS EPC APPR. DRAWINGS

DRAWN BY
REVIEWED BY
DATE
PROJECT NO. 6 of A# 1
DRAWING NAME
SITE PLAN for SUBDIVISION
SHEET NO.
A1

GENERAL DESIGN ELEMENTS (TRACT 2 | ONLY)

LANDSCAPING:
NEW LANDSCAPING SHALL INCLUDE PLANT SPECIES CONSISTENT WITH THOSE EXISTING ON THE ST. JOSEPH MEDICAL CAMPUS. SHADE TREES SHALL BE LOCATED ADJACENT TO THE STREETS AND PEDESTRIAN SQUARE AND WITHIN 40'-0" OF GRADE PARKING AREAS. SHADE TREES AND LOWER HEIGHT LANDSCAPING WITHIN PARKING BLANDS, AT BUILDING FOUNDATIONS AND AT AREAS OF NEW SITE CONSTRUCTION WHICH HAVE EXISTING SITE CONSTRUCTION.

LIGHTING:
OVERALL SITE LIGHTING SHALL BE CONSISTENT WITH THE TYPE, CHARACTER, COLOR OF EXISTING SITE LIGHTING ON THE ST. JOSEPH MEDICAL CAMPUS. PARKING AREA LIGHTING SHALL CONSIST OF 30' FOOT HIGH POLE MOUNTED FIXTURES. PEDESTRIAN WALKWAY LIGHTING SHALL BE A MINIMUM OF 25 FOOT CANDLES, AND SHALL BE COORDINATED FROM EXISTING AND PROPOSED PARKING AREA LIGHTING. NEW BUILDING ENTRANCES SHALL BE ADEQUATELY ILLUMINATED FOR EASE OF ACCESS.

PEDESTRIAN ACCESS:
A CLEAR PEDESTRIAN SQUARE SHALL CONNECT ALL NEW AND EXISTING FACILITIES. A PORTION OF THE WICKED HAMBURGER INC. HAS BEEN DEDICATED BALLY FOR PEDESTRIAN ACCESS BETWEEN THE NEW PARKING PARKING STRUCTURE AND THE ST. JOSEPH MEDICAL COURT. PEDESTRIAN ROUTES SHALL INCLUDE 6'-0" WIDE SIDEWALKS WITH ADEQUATE LIGHTING AND ADJACENT SHADE TREES. SECURE SHALL BE LOCATED AT EACH NEW BUILDING ENTRY. CROSSWALKS WITH RAISED OR SCORED PAVING SHALL BE INSTALLED ALONG ALL NEW AND EXISTING PEDESTRIAN CROSSINGS OF STREETS AND WHERE ADULT WORKS ST. JOSEPH MEDICAL CAMPUS AND SHALL BE CLEARLY DESIGNATED.

SIGNAGE:
MUCH OF THE EXISTING CAMPUS SIGNAGE IS OF THE INTERNALLY ILLUMINATED MONUMENT SIGN TYPE. NEW SIGNAGE SHALL BE INTERNALLY ILLUMINATED MONUMENT SIGN TYPE SIGNAGE LOCATED AT KEY PARKING AREA ENTRANCES. ~~BUILDING SIGNAGE SHALL BE NON ILLUMINATED & LIMITED TO AREA SHOWN ON ELEVATIONS~~ FOR TRACT 2B1

BUILDING CHARACTER:
NEW BUILDINGS SHALL BE CONSISTENT WITH THE CHARACTER OF THE ST. JOSEPH SQUARE VENICES, AND THE ST. JOSEPH REHABILITATION HOSPITAL BUILDINGS. BARRIER BRICK SHALL BE ACCEPTABLE BUILDING ENTRANCES SHALL BE DEFINITELY ENCOURAGED AND SHALL ACCEPT FIRST FOR AREAS, WITH EARTH TONED STUCCO AND DYNAMIC FINISH SYSTEMS SHOWING UPPER BUILDING LEVELS. BLUE TINTED TRELLISES SHALL FURTHER ACCENT ENTRANCE. VERTICAL ELEMENTS TO CREATE A SMOOTH TRANSITION BETWEEN EXIST SKY AND RECALL TRADITIONAL DESIGN ELEMENTS OF NEW MEXICO.

PARKING INFORMATION

HEART HOSPITAL PARKING CALCULATIONS: TRACT 2B2
SEE PLAN FOR BUILDING CONDITION 8a

REQUIRED SPACES (@ 1 PER 4 PARKING)	30
CONFIRMED EXISTING SPACES	125

TRACT 2B1

HEART INSTITUTE OFFICE BUILDING (TRACT 2B1) PARKING REQUIREMENTS

OFFICE
(CITY ZONING CODE PART 3, SECTION 14-16-3-1, PARAGRAPH A21)

FIRST FLOOR: 8,158 GSF x .85 = 5,217.5 NSF/200 =	26	
SECOND FLOOR: 15,808 GSF x .85 = 13,369 NSF/200 =	66	
THIRD FLOOR: 14,802 GSF x .85 = 12,580 NSF/200 =	62	
PARKING SPACES REQUIRED	113	
MAX ALLOWABLE (HEART SYSTEM ALTERATION	162	
TOTAL PARKING SPACES REQUIRED (INCLUDING 6 ACCESSIBLE WITH 1 VAN ACCESSIBLE)	181	
TOTAL PARKING SPACES PROVIDED: (183 + 83) (INCLUDING 6 ACCESSIBLE, WITH 4 VAN ACCESSIBLE)	266	
COMPACT SPACES ALLOWED: 266 x .25%	66	
COMPACT SPACES PROVIDED:	45	

ALL COMPACT PARKING SPACES WILL BE 8'-6"W x 20'-0"L MIN.

BICYCLE PARKING REQUIREMENTS
TOTAL BICYCLE SPACES REQUIRED: 181/20 = 5
TOTAL BICYCLE SPACES PROVIDED: 5

SEE PLAN FOR BUILDING CONDITION 8a

PARKING & ACCESS EASEMENT TRACT 2B2
SHARE PARKING AND SHARE ACCESS BETWEEN SCHOOL ... (HEART HOSPITAL) AND (HEART INSTITUTE OFFICE BUILDING) SHALL BE CONSIDERED IN PLAT

SITE INFORMATION

SEE PLAN FOR BUILDING CONDITION 8a

HEART HOSPITAL SITE CALCULATIONS (TRACT 2B2)

TOTAL SITE SQUARE FOOTAGE	12,329
TOTAL SITE SQUARE FOOTAGE	278,494.4 SF (4.9 ACRES)
FAR	.27

HEART INSTITUTE MEDICAL OFFICE BUILDING (TRACT 2B1)

TOTAL BUILDING SQUARE FOOTAGE	36,350
TOTAL SITE SQUARE FOOTAGE	101,285.5 SF (2.32 ACRES)
FAR	.36

PARKING DECK SQUARE FOOTAGE: 18,765

SITE LIGHTING:
PEDESTRIAN WALKWAY LIGHTING SHALL BE A MINIMUM OF 25 FOOTCANDLES AND SHALL BE COORDINATED WITH EXISTING & PROPOSED PARKING AREA LIGHTING.

LANDSCAPING:
REFER TO SHEET L1.0 OF THE HOSPITAL PLAN (HOSPITAL) INCORPORATING ON EXISTING LANDSCAPING DRAWINGS

LEGEND

EXISTING PROPERTY LINES
PROPOSED PROPERTY LINE

VICINITY MAP

CASE NUMBER: 1000596

02 DRB - 00535 02 EPC - 00141

THIS SITE DEVELOPMENT PLAN IS CONSISTENT WITH THE PLAN APPROVED AT THE March 22, 2002 ENVIRONMENTAL PLANNING COMMISSION HEARING.

TRAFFIC ENGINEER, TRANSPORTATION DIVISION	7-17-02
CITY ENGINEER/AMAFCA	6/26/02
PUBLIC WORKS, UTILITY DIVISION	6/26/02
DESIGN AND DEVELOPMENT DEPARTMENT, CIP	6/26/02
CITY PLANNER, PLANNING DIVISION	7/25/02

SITE LIGHTING
PEDESTRIAN WALKWAY LIGHTING SHALL BE A MINIMUM OF .25 FOOT CANDLES AND SHALL BE COORDINATED WITH EXISTING & PROPOSED PARKING AREA LIGHTING.

SITE DESIGN
SITE SHALL CONFORM TO DPM STANDARDS

SITE PLAN FOR BUILDING PERMIT CONDITION #7d.

AFD PLANS CHECKING OFFICE
924-3611
APPROVED/DISAPPROVED
HYDRANT(S) ONLY
SIGNATURE & DATE 6/26/02

architect interi plann engineer
Dekker Perich Sabatini
6801 Jefferson NE
Suite 100
Albuquerque, NM 87
505 761-9700
fax 761-4222
dps@dpsabq.com

DRB Submittal
JUNE 26, 2002

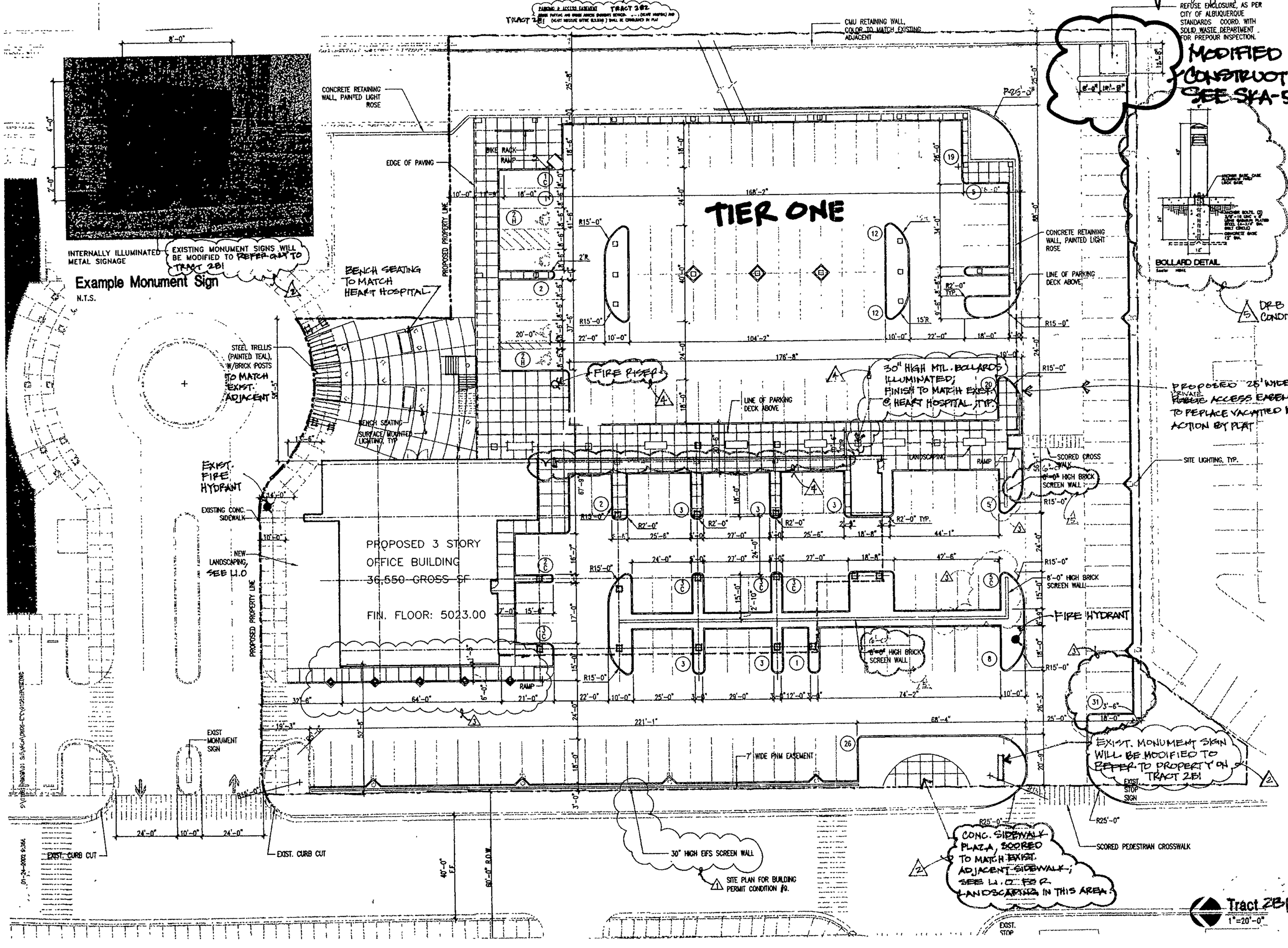

Heart Institute Medical Office Building
Albuquerque, NM 87102

12-2-02 ADMINISTRATIVE AMENDMENT

revisions	
4-8-02	EPC FINDINGS AND CON 3-22-02
6-19-02	NEIGHBORHOOD ASSOC.
6-19-02	DRB REVIEW COMMENTS
6-26-02	ARCHITECT'S REVISION TO EPC PLAN DRAWINGS

plotted: 01-24-2002 9:34A
S:\01081-HMOB\01 SD\ARCH\DWGS-EPC\01

drawn by
reviewed by
date 6-26-02
project no. 100596
drawing name
Tract 2B1 Site Development Pl for Building Permit

sheet no. A3
2 of

GENERAL DESIGN ELEMENTS (TRACT 281 ONLY)

LANDSCAPING
NEW LANDSCAPING SHALL INCLUDE PLANT SPECIES COMPATIBLE WITH THOSE EXISTING ON THE ST. JOSEPH MEDICAL CAMPUS. SHADE TREES SHALL BE LOCATED ADJACENT TO THE STREETS AND PEDESTRIAN WALKWAYS AND SHALL HAVE A MINIMUM HEIGHT AT GRADE PARKING AREAS. SHADE TREES AND LOWER HEIGHT LANDSCAPING WITHIN PARKING ISLANDS AT BUILDING PERIMETERS AND AT AREAS OF NEW SIDE CONSTRUCTION WHICH ABUT EXISTING SITE CONSTRUCTION.

LIGHTING
OVERALL SITE LIGHTING SHALL BE COORDINATED WITH THE TYPE, CHARACTER, COLOR OF EXISTING SITE LIGHTING ON THE ST. JOSEPH MEDICAL CAMPUS. PARKING AREA LIGHTING SHALL CONSIST OF 30' FOOT HIGH POLE MOUNTED FIXTURES. PEDESTRIAN BUILDING LIGHTING SHALL BE A MINIMUM OF .25 FOOT CANDLES, AND SHALL BE COORDINATED WITH EXISTING AND PROPOSED PARKING AREA LIGHTING. NEW BUILDING ENTRANCES SHALL BE ADEQUATELY ILLUMINATED FOR EASE OF ACCESS.

PEDESTRIAN ACCESS
A CLEAR PEDESTRIAN ROUTE SHALL CONNECT ALL NEW AND EXISTING FACILITIES. A PORTION OF THE TRICKED IMPROVE INC. HAS BEEN DEDICATED SOLELY FOR PEDESTRIAN ACCESS BETWEEN THE NEW PARKING PARKING STRUCTURE AND THE ST. JOSEPH MEDICAL CENTER. PEDESTRIAN ROUTES SHALL INCLUDE 5'-0" WIDE SIDEWALKS WITH ADEQUATE LIGHTING ON AND ADJACENT SHADE TREES. SEATING SHALL BE LOCATED AT EACH NEW BUILDING ENTRY. CROSSWALKS WITH PAINTED OR SCORED PAVING SHALL BE INSTALLED ALONG ALL NEW AND EXISTING PEDESTRIAN CROSSINGS OF STREETS AND DRIVE AISLES WITHIN ST. JOSEPH MEDICAL CAMPUS AND SHALL BE CLEARLY DESIGNATED.

SIGNAGE
MUCH OF THE EXISTING CAMPUS SIGNAGE IS OF THE INTERNALLY ILLUMINATED MONUMENT SIGN TYPE. NEW SITE SIGNAGE SHALL BE INTERNALLY ILLUMINATED MONUMENT SIGN TYPE SIGNAGE LOCATED AT KEY PARKING AREA ENTRANCES. ~~SIGNAGE SHALL BE INTERNALLY ILLUMINATED, SIGNS ARE NOT ALLOWED ON THE ABOVE BUILDING ELEVATIONS.~~ BUILDING SIGNAGE SHALL BE NON ILLUMINATED AND LIMITED TO AREA SHOWN ON ELEVATIONS

BUILDING CHARACTER
NEW BUILDINGS SHALL BE CONSISTENT WITH THE CHARACTER OF THE ST. JOSEPH SIGNATURE VENTURE, AND THE ST. JOSEPH REHABILITATION HOSPITAL BUILDING. DARKER BROWN BRICK ACCENTING BUILDING ENTRANCES TO EFFECTIVELY ENCOURAGE AND SHALL ACCENT FIRST FOR ARCHES, WITH DARKER TONED STUCCO AND SYNTHETIC PARTS CUSTOM SHEARING UPPER BUILDING LEVELS. BLUE TERRA TILE SHALL PROVIDE ACCENT DETAILS & VERTICAL ELEMENTS TO CREATE A SMOOTH TRANSITION BETWEEN EARTH & SKY AND RECALL TRADITIONAL DESIGN ELEMENTS OF NEW MEXICO.

VICINITY MAP

SITE INFORMATION

SEE PLAN FOR SUBMISSION REVISION #1

NEART HOSPITAL SITE CALCULATIONS (TRACT 281)

TOTAL BUILDING SQUARE FOOTAGE	57,328
TOTAL SITE SQUARE FOOTAGE	243,494.8SF (5.9 ACRES)
FAR	.27

NEART INSTITUTE MEDICAL OFFICE BUILDING (TRACT 281)

TOTAL BUILDING SQUARE FOOTAGE	36,550
TOTAL SITE SQUARE FOOTAGE	106,285 S.F. (2.44 ACRES)
FAR	.34
PARKING DECK SQUARE FOOTAGE	28,745

SITE LIGHTING
PEDESTRIAN PATHWAY LIGHTING SHALL BE A MINIMUM OF .25 FOOT-CANDLES AND SHALL BE SHIELDED FROM EXTERNAL & PERIMETER AREAS LEVELS.

LANDSCAPING
REFER TO SHEET 7 OF THIS SUBMITTAL FOR ADDITIONAL INFORMATION ON EXISTING LANDSCAPED CONDITIONS

LEGEND

- EXISTING PROPERTY LINES
- PROPOSED PROPERTY LINE

PARKING INFORMATION

NEART HOSPITAL PARKING CALCULATIONS (TRACT 282)

SEE PLAN FOR SUBMISSION REVISION #1

REQUIRED SPACES (NO NEW PARKING)	38
EXISTING EXISTING SPACES	135

NEART INSTITUTE OFFICE BUILDING (TRACT 281) (PARKING REQUIREMENTS)

OFFICES
(CITY ZONING CODE PART 3, SECTION 14-16-3-1, PARAGRAPH A21)

FIRST FLOOR: 8,550 GSF x .85 = 5,2272 NSF/200 =	26
SECOND FLOOR: 18,000 GSF x .85 = 13,260 NSF/300 =	44
THIRD FLOOR: 14,800 GSF x .85 = 12580 NSF/300 =	42
PARKING SPACES REQUIRED	112
10% ALBUQUERQUE TRANSIT SYSTEM REDUCTION	106
TOTAL PARKING SPACES REQUIRED (INCLUDING 8 ACCESSIBLE, WITH 1 VAN ACCESSIBLE)	101

SEE PLAN FOR BUILDING FOOTPRINT REVISION #1

TOTAL PARKING SPACES PROVIDED (183 + 63) (INCLUDING 8 ACCESSIBLE, WITH 4 VAN ACCESSIBLE)	246
COMPACT SPACES ALLOWED: 246 x .35%	86
COMPACT SPACES PROVIDED:	43

ALL COMPACT PARKING SPACES WILL BE 8'-6"W x 20'-0"L MIN.
FOR TRACT 281

BICYCLE PARKING REQUIREMENTS
TOTAL BICYCLE SPACES REQUIRED: 101/20 = 5
TOTAL BICYCLE SPACES PROVIDED: 5

SEE PLAN FOR SUBMISSION REVISION #1

PARKING & ACCESS TRACKING
WHERE PARKING AND CROSS ACCESS EXISTS BETWEEN TRACT 282 (NEART HOSPITAL) AND TRACT 281 (NEART INSTITUTE OFFICE BUILDING) SHALL BE DOCUMENTED BY PLAT

CASE NUMBER:

THIS SITE DEVELOPMENT PLAN IS CONSISTENT WITH THE PLAN APPROVED AT THE _____ 2002 ENVIRONMENTAL PLANNING COMMISSION HEARING

TRAFFIC ENGINEER, TRANSPORTATION DIVISION

CITY ENGINEER/AMAFCA

PUBLIC WORKS, UTILITY DIVISION

DESIGN AND DEVELOPMENT DEPARTMENT, CIP

CITY PLANNER, PLANNING DIVISION

architecture interior planning engineering

Dekker Perich Sabatini

6801 Jefferson NE
Suite 100
Albuquerque, NM 8710

505 761-9700
fax 761-4222
dps@dpsabq.com

INTERNALLY ILLUMINATED METAL SIGNAGE

EXISTING MONUMENT SIGNS WILL BE MODIFIED TO REFER ONLY TO TRACT 281

Example Monument Sign

N.T.S.

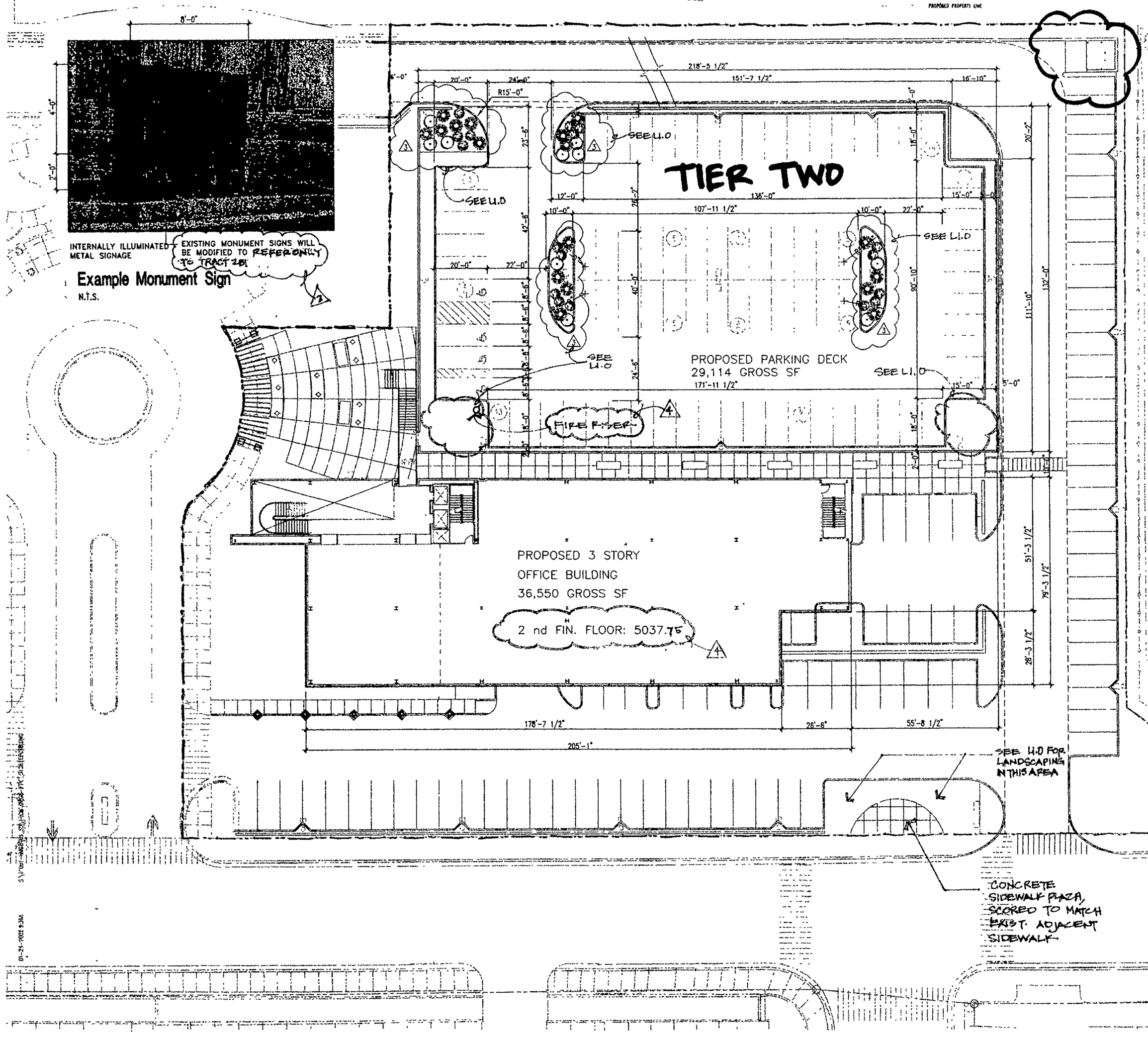

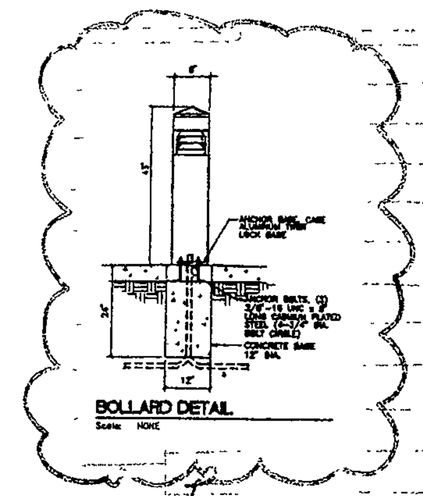

BOLLARD DETAIL

DRB CONDITION

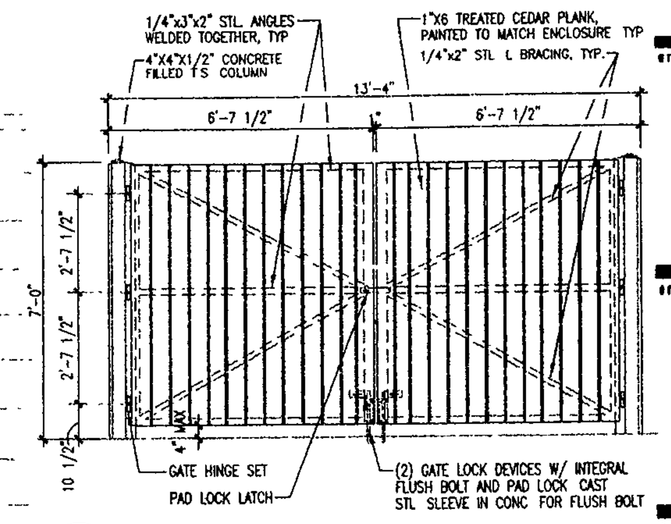

Refuse Enclosure Elevation

3/8"=1'-0" < X-02DUMP3.DWG >

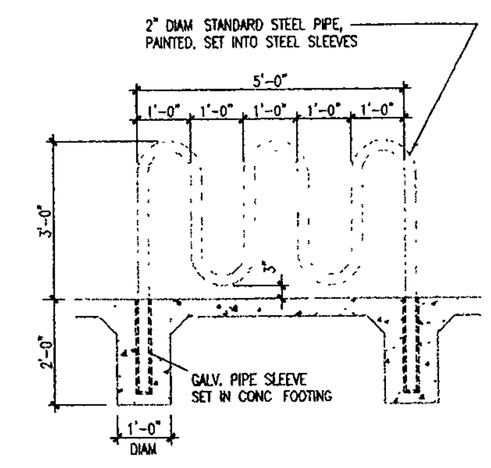

Section Detail

1/2"=1'-0" < 02BIKE01.DWG >

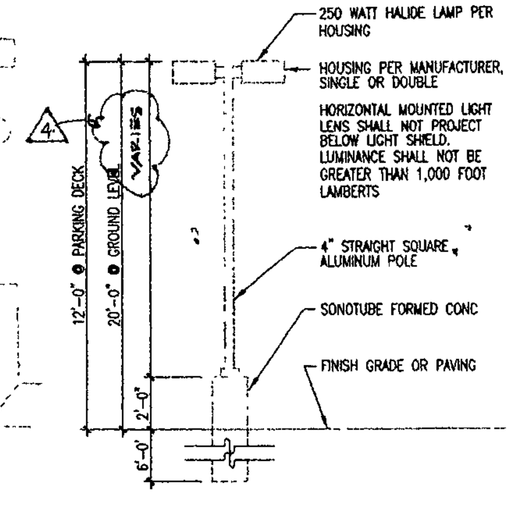

Light Pole Elevation

1/4"=1'-0" < >-LIGHT.DWG >

Tract 281 Site Development Plan for Building Permit

1"=20'-0" DECK PLAN

0 5' 10' 20'

DRB Submittal

JUNE 26, 2002

Heart Institute Medical Office Building

Albuquerque, NM 87102

revisions
1 8-19-02 NEIGHBORHOOD ASSOC COMM
4 6-25-02 ARCHITECT'S RESPONSE TO EPC APPROVED PLAN

plotted: 01-24-2002 8:36A
S:\010181-MAOB\01 SD\ARCH\DWGS-EPC\010181E

drawn by
reviewed by
date 6-26-02
project no. #100596
drawing name
Tract 281
Site Development Plan for Building Permit

sheet no.
A4
3 of 9

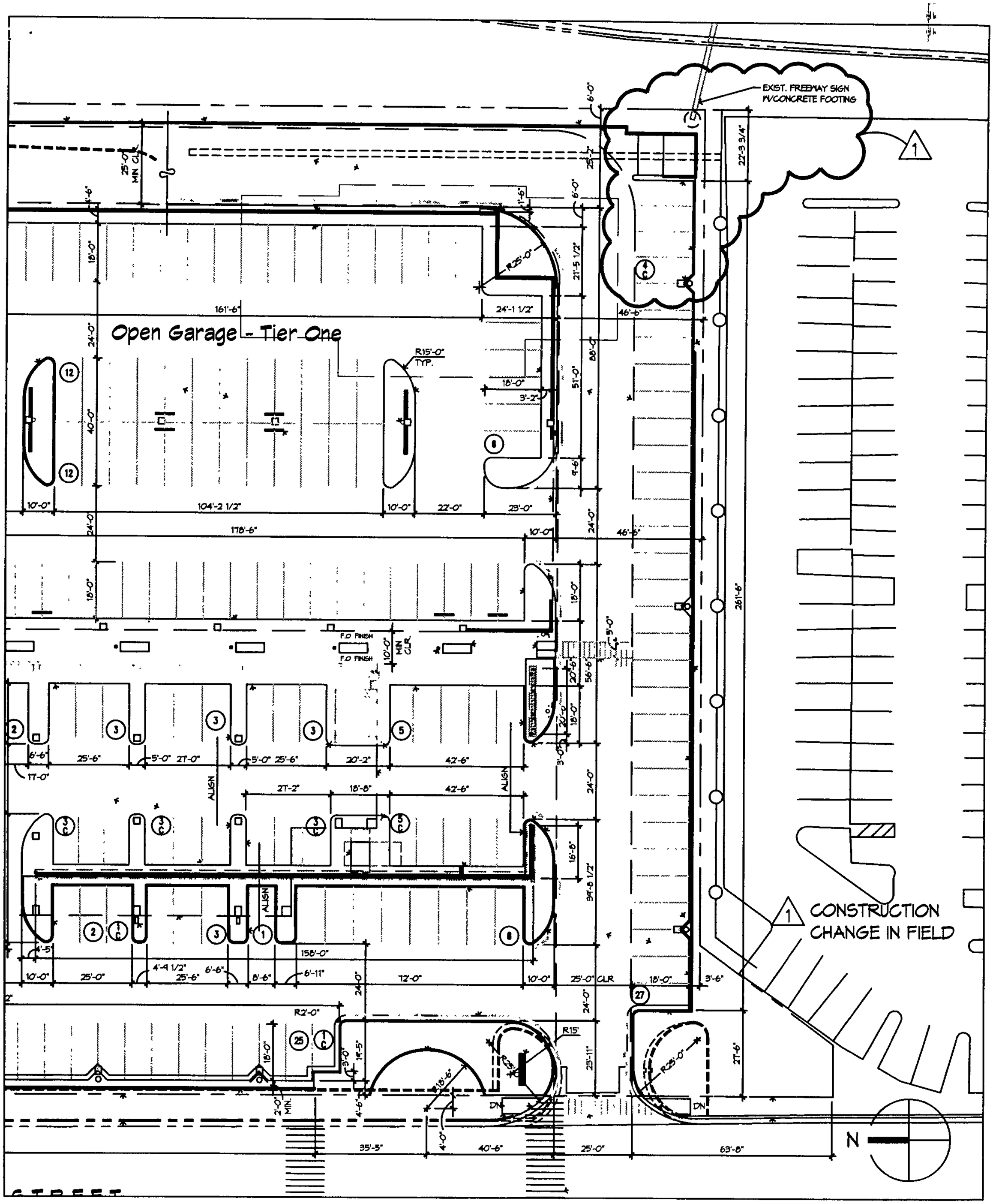

S:\01081-HMOB\Drawings\Arch\01081_A001.dwg, 07/10/2003 10:59:32 AM, curtis

architecture
interiors
planning
engineering

Dekker/Perich/Sabatini

6801 Jefferson NE
Suite 100
Albuquerque, NM 87109

505 761-9700
fax 761-4222
dps@dpsabq.com

TRAFFIC CIRCULATION LAYOUT

H.I.M.O.B.

502 ELM STREET NE
ALBUQUERQUE, NM 87109

REVISED PARKING LAYOUT

DRAWN BY	DPS	SCALE	NTS
REVIEWED BY	DPS	SKA-052	
DATE ISSUED	7-11-03		
PROJECT NO.	01081	1 NO.	1

332 MURIEL NE, ALBUQUERQUE, NM 87123
PH. (505) 296-7529 FAX. (505) 292-6190
NM Licenses #25282
www.accustripe.com

ACCUSTRIPE, INC

01081
G/COR
7/9/03

Fax and E-Mail

To: Marty Hibbs **From:** DAN MARTINEZ

CC: Curtis Proctor 761-4222

Fax: ~~842-5410~~ 243-9678 **Pages:** 4

Phone: 980-0750 **Date:** 7/9/2003

Re: Heart Institute Medical Office **Job #:** 21636

☐ **Urgent** x **For Review** ☐ **Please Comment** ☐ **Please Reply** ☐ **Please Recycle**

Dear Marty:

This letter is in response to the handicap installation on the ground floor of the parking garage on the above referenced project. I have spoken to Curtis Proctor with Dekker Perich and have explained to him the purpose of our installation at this height. He has asked me to respond back to you and I will fax a copy to him as well.

Please note that our submittal on all signs, including handicapped signs call for mounting height to be 7 ft from the bottom of the sign. This in accordance with the following guidelines:

1. ANSI sec. 4.6.2, "such signs shall not be obscured by a vehicle parked in the space."

* 2. Manual of Uniform Traffic Control Devices (MUTCD), "where parking or pedestrian movements occur, the clearance to the bottom of the sign shall be at least 7 ft. (document attached)

3. Americans with Disabilities (ADA) Guidelines—"A sign with the international symbol of accessibility must be located in front of the parking space and mounted high enough so it is not hidden by a vehicle parked in the space." (document attached)

The 7 ft height far exceeds contract drawing details and city requirement, and we recommend this height to eliminate pedestrians cutting themselves on the signs as has been the case in the past. If the lower heights are required, we request a release of liability in case of accidents.

Sincerely,

Dan Martinez
President

ACCUSTRIPE, INC.

Specializing in Parking Lot Striping
332 Muriel N.E.
Albuquerque, NM 87123
(505) 296-7529
FAX (505) 292-6190

Sign Installation: per Manual on Uniform Traffic Control Devices (MUTCD 2000)

ROADSIDE SIGN
RURAL DISTRICT

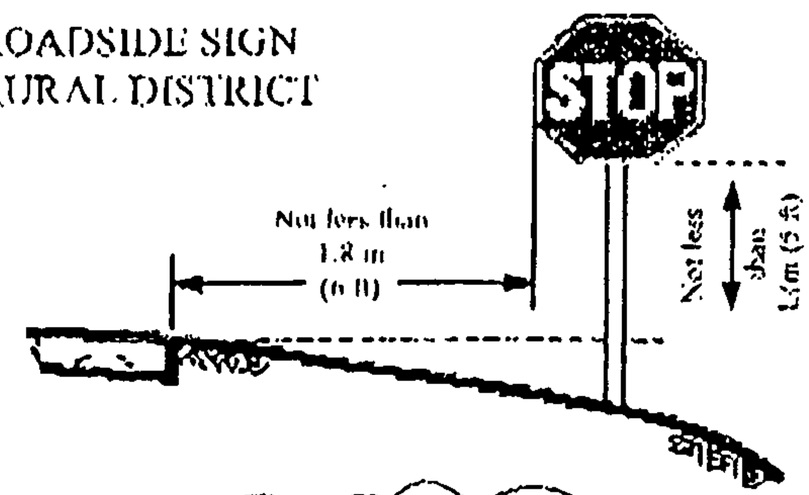

ROADSIDE SIGN
RURAL DISTRICT

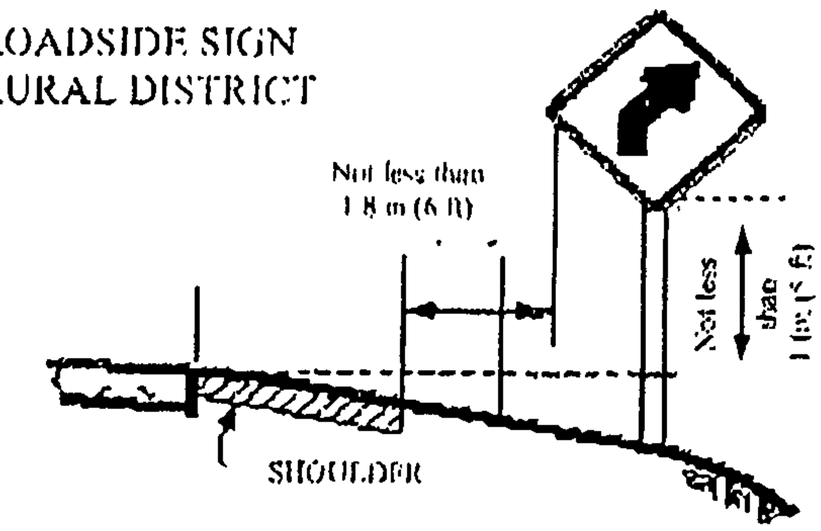

ROADSIDE SIGN
BUSINESS OR
RESIDENCE DISTRICT

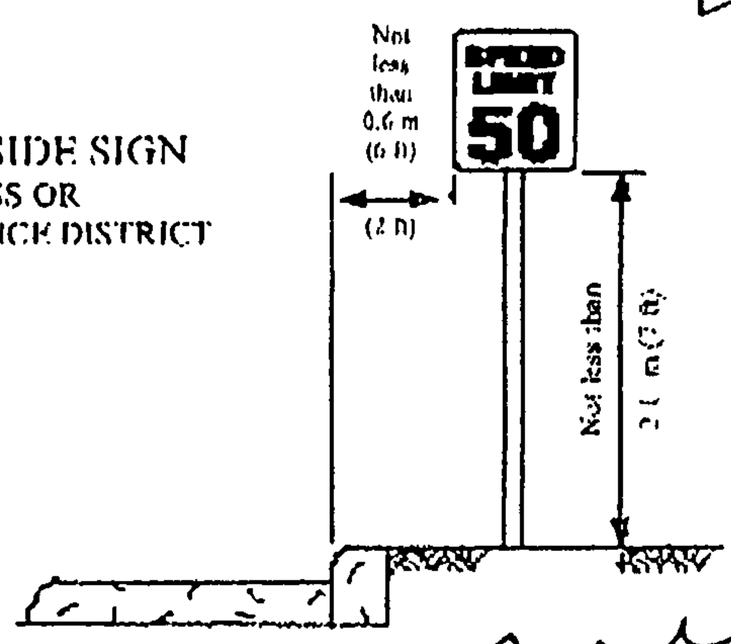

WARNING SIGN
WITH ADVISORY
SPEED PLAQUE
RURAL DISTRICT

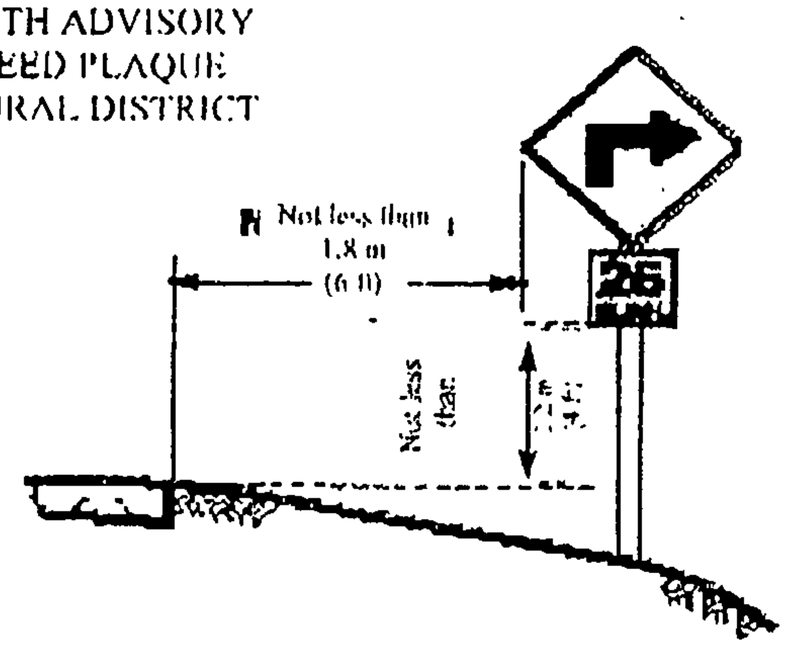

<u>Section 2A.18 Mounting Height</u>
<u>Standard:</u>

Signs installed at the side of the road in rural districts shall be at least 1.5 m (5 ft), measured from the bottom of the sign to the near edge of the pavement. <u>Where parking or pedestrian movements occur, the clearance to the bottom of the sign shall be at least 2.1 m (7 ft).</u>

Directional signs on expressways and freeways shall be installed with a minimum height of 2.1 m (7 ft). If a secondary sign is mounted below another sign, the major sign shall be installed at least 2.4 m (8 ft) and the secondary sign at least 1.5 m (5 ft) above the level of the pavement edge. All route signs, warning signs, and regulatory signs on expressways and freeways shall be at least 2.1 m (7 ft) above the level of the pavement edge.

Overhead signs shall provide a vertical clearance of not less than 5.1 m (17 ft) to the sign, light fixture, or sign bridge, over the entire width of the pavement and shoulders except where a lesser vertical clearance is used for the design of other structures. The vertical clearance to overhead sign structures or supports shall not be greater than 0.3 m (1 ft) in excess of the minimum clearance of other structures.

Accessible Parking

When parking is provided for the public, designated accessible parking spaces must be provided, if doing so is readily achievable. An accessible parking space must have space for the vehicle and an additional space located either to the right or to the left of the space that serves as an access aisle. This aisle is needed to permit a person using a wheelchair, electric scooter, or other mobility device to get out of their car or van. A sign with the international symbol of accessibility must be located in front of the parking space and mounted high enough so it is not hidden by a vehicle parked in the space.

Accessible parking spaces should be the spaces closest to the accessible entrance and be located on level ground. If it is not readily achievable to locate accessible parking in the closest spaces due to sloped pavement or other existing conditions, then the closest level area should be selected. An accessible route must be provided between the access aisle and the accessible building entrance. This route must have no steps or steeply sloped surfaces and it must have a firm, stable, slip-resistant surface.

Van accessible spaces must have an access aisle that is **at least eight-feet wide** and be designated by a sign with the international symbol and "van accessible." There should be a vertical clearance of at least 98 inches on the vehicular route to the space, at the parking space, and along the vehicular route to an exit.

Provide a parking space that is at least 8 feet wide. There should be at least a 98 inch high clearance at the parking space, the adjacent access aisle and along the vehicular route to the space and vehicular exit.

Install a sign with the International symbol of accessibility and "van accessible" and mount it high enough so it is not hidden by the vehicle parked in the space.

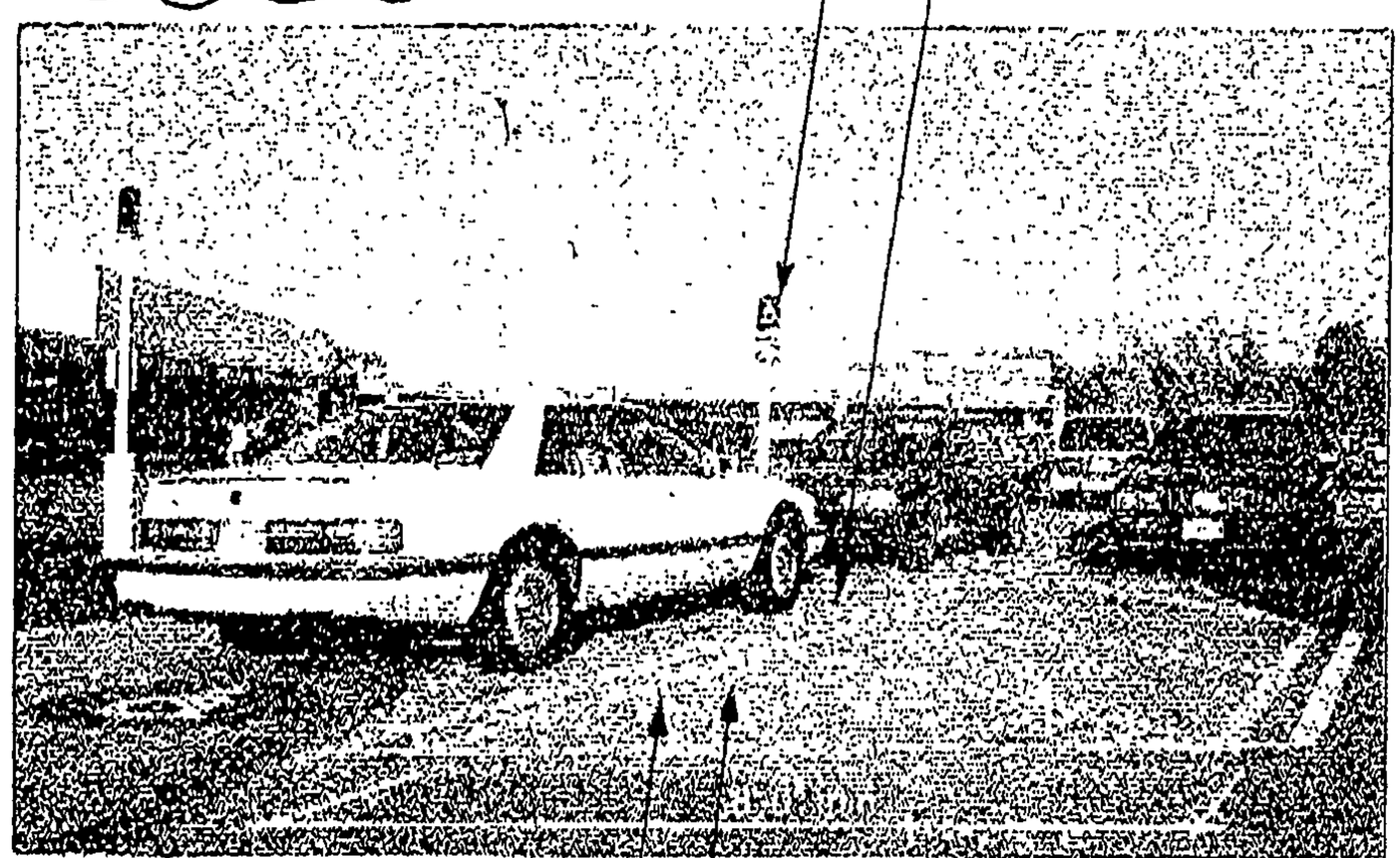

Locate parking space and access aisle so that they are relatively level (1:50 maximum slope in all directions is recommended if readily achievable)

Provide an access aisle that is at least 8 feet wide next to the van parking space to permit a person using a wheelchair or scooter to exit or enter a van with a side-mounted lift.

Provide an accessible route to the accessible entrance(s) to the building - a marked crosswalk may be needed if route crosses vehicular traffic.

A Van Accessible Parking Space

(1 of 8 of all accessible parking spaces, but at least one, must be van accessible
Although designated a van accessible space, cars may use the space too.)

Dekker/Perich/Sabatini
architecture
interiors
planning
engineering

July 18, 2003

Mr. Richard Dourte
City of Albuquerque
Public Works Department - Transportation Development Services Section
Albuquerque, New Mexico 87103

Re: Architect's Certification for Permanent C.O.
Heart Institute Medical Office Building
502 Elm Street
Albuquerque, NM 87102
Case No. 1000596

Dear Mr. Dourte:

Attached is a copy of the approved Second Amended Site Plan for Subdivision. Our office has visited the site at regular intervals appropriate to the stages of construction. Such visits and observations are not intended to be an exhaustive check or detailed inspection of the Contractor's work but rather are to allow our office, as experienced professionals, to become generally familiar with the work in progress and to determine, in general, if the work is proceeding in accordance with the Contact Documents.

Based on our observations we hereby certify that this site has been constructed in substantial compliance with the approved Second Amended Site Plan for Subdivision, with the only two notable exceptions:

1. Trash Enclosure relocation:
   The trash enclosure was moved 2'-0" west to avoid undermining the concrete footing of an existing overhead highway sign. As a result, four parking stalls were stripped as compact stalls instead of standard stalls. This change increased our total from 45 compact stalls to 49. Our maximum allowable is 66 compact stalls. (see enclosures)
2. Height of ADA signage:
   We have pole-mounted signage in the public way. As per ADA the signage was designed to be mounted at 5'-0" above finish grade. However, the signage was mounted at 7'-0" above finish grade due to a stipulation in the Manual of Uniform Traffic Control Devices, which allows for signage in the public way to be mounted at 7'-0", to avoid injury to pedestrians. (see enclosures)

If you have any concerns or questions regarding this, please fell free to contact us.

Sincerely,

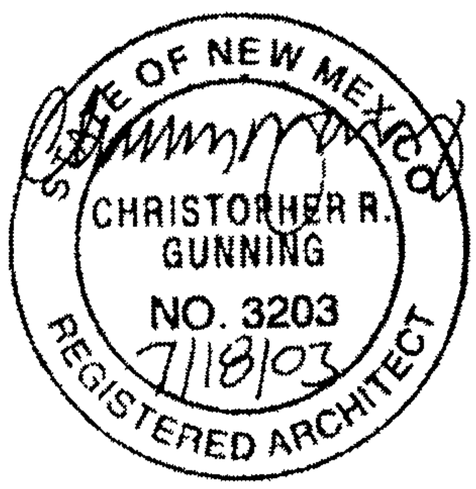

Christopher R. Gunning, AIA
Principal
Dekker/Perich/Sabatini

S \02057 NMEAF\General\Correspondence\L-TCLcert 2003-7-18 doc

City of Albuquerque

P.O. BOX 1293 ALBUQUERQUE, NEW MEXICO 87103

Planning Department
Transportation Development Services Section

July 22, 2003

Christopher R. Gunning, Registered Architect
6801 Jefferson Blvd #100
Albuquerque, NM 87109

Re: Certification Submittal for Final Building Certificate of Occupancy for
Heart Institute Medical Office Building, [K-15/D6F]
502 Elm St NE
Architect's Stamp Dated 07/18/03

Dear Mr. Gunning:

The TCL / Letter of Certification submitted on July 18, 2003 is sufficient for acceptance by this office for final Certificate of Occupancy (C.O.). Notification has been made to the Building and Safety Section.

Sincerely,

Nilo E. Salgado-Fernandez, P.E.
Senior Traffic Engineer
Development and Building Services
Planning Department

c: Engineer
Hydrology file
CO Clerk

DRAINAGE AND TRANSPORTATION INFORMATION SHEET

K-15/D6F

(REV. 1/28/2003rd)

PROJECT TITLE: HEART INSTITUTE MEDICAL OFFICE BUILDING ZONE MAP/DRG. FILE #: [illegible]

DRB #: 02DRB-00533 EPC#: 02EPC 00140 WORK ORDER#:

LEGAL DESCRIPTION: TRACT 2B1 ST. JOSEPHS MEDICAL CAMPUS

CITY ADDRESS: 502 ELM ST NE 87102

ENGINEERING FIRM: CONTACT:
ADDRESS: PHONE:
CITY, STATE: ZIP CODE:

OWNER: HEART OFFICE LLC CONTACT: JACK WESTMAN
ADDRESS: 4600B MONTGOMERY BLVD STE 103 PHONE: 883-5221
CITY, STATE: ALBUQUERQUE, NM 87109 ZIP CODE:

ARCHITECT: DEKKER PERICH SABATINI CONTACT: CURTIS PROCTOR
ADDRESS: 6801 JEFFERSON BLVD #100 PHONE: 761-9700
CITY, STATE: ALBUQUERQUE, NM ZIP CODE: 87109

SURVEYOR: CONTACT:
ADDRESS PHONE:
CITY, STATE: ZIP CODE:

CONTRACTOR: BRADBURY STAMM CONSTRUCTION CONTACT: MARTY HIBBS
ADDRESS: 3701 PASEO DEL NORTE PHONE: 765-1200
CITY, STATE: ALBUQUERQUE, NM ZIP CODE: 87184

CHECK TYPE OF SUBMITTAL:

____ DRAINAGE REPORT
____ DRAINAGE PLAN 1st SUBMITTAL, ***REQUIRES TCL or equal***
____ DRAINAGE PLAN RESUBMITTAL
____ CONCEPTUAL GRADING & DRAINAGE PLAN
____ GRADING PLAN
____ EROSION CONTROL PLAN
____ ENGINEER'S CERTIFICATION (HYDROLOGY)
____ CLOMR/LOMR
____ TRAFFIC CIRCULATION LAYOUT (TCL)
X ENGINEERS CERTIFICATION (TCL)
____ ENGINEERS CERTIFICATION (DRB APPR. SITE PLAN)
____ OTHER

CHECK TYPE OF APPROVAL SOUGHT:

____ SIA / FINANCIAL GUARANTEE RELEASE
____ PRELIMINARY PLAT APPROVAL
____ S. DEV. PLAN FOR SUB'D. APPROVAL
____ S. DEV. PLAN FOR BLDG. PERMIT APPROVAL
____ SECTOR PLAN APPROVAL
____ FINAL PLAT APPROVAL
____ FOUNDATION PERMIT APPROVAL
____ BUILDING PERMIT APPROVAL
X CERTIFICATE OF OCCUPANCY (PERM.)
____ CERTIFICATE OF OCCUPANCY (TEMP.)
____ GRADING PERMIT APPROVAL
____ PAVING PERMIT APPROVAL
____ WORK ORDER APPROVAL
____ OTHER (SPECIFY)

WAS A PRE-DESIGN CONFERENCE ATTENDED:

____ YES
X NO
____ COPY PROVIDED

RECEIVED
JUL 18 2003
HYDROLOGY SECTION

DATE SUBMITTED: BY:

Requests for approvals of Site Development Plans and/or Subdivision Plats shall be accompanied by a drainage submittal. The particular nature , location and scope ot the proposed development defines the degree of drainage detail. One or more of the following levels of submittal may be required based on the following:

1. **Conceptual Grading and Drainage Plan**: Required for approval of Site Development Plans greater than five (5) acres and Sector Plans.
2. **Drainage Plans**: Required for building permits, grading permits, paving permits and site plans less than five (5) acres.
3. **Drainage Report**: Required for subdivisions containing more than ten (10) lots or constituting five (5) acres or more.

Dekker/Perich/Sabatini
architecture
interiors
planning
engineering

Cc: Jack Westman, Heart Office LLC
Marty Hibbs, BradburyStamm Construction
Bob Golden, BradburyStamm Construction
file

Enclosures

GENERAL DESIGN ELEMENTS (TRACT 2B1 ONLY)

LANDSCAPING
NEW LANDSCAPING SHALL INCLUDE PLANT SPECIES CONSISTENT WITH THOSE EXISTING ON THE ST JOSEPH MEDICAL CAMPUS. SHADE TREES SHALL BE LOCATED ADJACENT TO BUILDINGS AND PEDESTRIAN ROUTES AND BERMS NOT AT GRADE PARKING AREAS. SHADE TREES AND LARGE SHRUBS LANDSCAPING WITHIN PARKING BLANDS AT BUILDING PERIMETERS AND AT AREAS OF NEW SITE CONSTRUCTION WHICH HAVE EXISTING SITE CONSTRUCTION.

LIGHTING
OVERALL SITE LIGHTING SHALL BE CONSISTENT WITH THE TYPE, CHARACTER, COLOR OF EXISTING SITE LIGHTING ON THE ST JOSEPH MEDICAL CAMPUS. PARKING AREA LIGHTING SHALL CONSIST OF 30' FOOT HIGH POLE MOUNTED FIXTURES. PEDESTRIAN WALKWAY LIGHTING SHALL BE A MINIMUM OF 10 FOOT CANDLES, AND SHALL BE COORDINATED WITH EXISTING AND PROPOSED PARKING AREA LIGHTING. NEW BUILDING ENTRANCES SHALL BE ACCEPTABLY ILLUMINATED FOR EASE OF ACCESS.

PEDESTRIAN ACCESS
A CLEAR PEDESTRIAN ROUTE SHALL CONNECT ALL NEW AND EXISTING FACILITIES. A PORTION OF THE WALKER UNDERPASS AVE. HAS BEEN DEDICATED SOLEY FOR PEDESTRIAN ACCESS BETWEEN THE NEW PARKING STRUCTURE AND THE ST. JOSEPH MEDICAL CENTER. PEDESTRIAN ROUTES SHALL INCLUDE 6'-0" WIDE SIDEWALKS WITH ADEQUATE LEGRESS AIR AND ADJACENT SHADE TREES. SEATING SHALL BE LOCATED AT EACH NEW BUILDING ENTRY. CROSSWALKS SHOULD BE PAINTED OR BRICK PAVED ALONG ALL NEW AND EXISTING PEDESTRIAN CROSSINGS OF STREETS AND DRIVE AISLES WITHIN ST. JOSEPH MEDICAL CAMPUS AND SHALL BE CLEARLY DESIGNATED.

SIGNAGE
MUST BE THE EXISTING CAMPUS SIGNAGE IS OF THE INTERNALLY ILLUMINATED MONUMENT SIGN TYPE. NEW SITE SIGNAGE SHALL BE INTERNALLY ILLUMINATED MONUMENT SIGN TYPE SIGNAGE LOCATED AT KEY PARKING AREA ENTRANCES. ~~[illegible]~~ BUILDING SIGNAGE SHALL BE NON ILLUMINATED AND LIMITED TO AREA SHOWN ON ELEVATIONS BUILDING ELEVATIONS.

BUILDING CHARACTER
NEW BUILDINGS SHALL BE CONSISTENT WITH THE CHARACTER OF THE ST JOSEPH SQUARE VISTOR, AND THE ST JOSEPH REHABILITATION HOSPITAL BUILDINGS. DARKER BRICK NEW BUILDINGS SHALL BE CONSISTENT WITH THE CHARACTER OF THE ST JOSEPH SQUARE VISITOR, AND THE ST JOSEPH REHABILITATION HOSPITAL BUILDINGS. DARKER BRICK WITH EARTH TONED STUCCO AND DYNAMIC FINISH SYSTEMS. WEATHERING BANDS ACCENTING BUILDING HEIGHTS IS STRONGLY ENCOURAGED AND SHALL OCCUR FIRST FOR METAL WITH EARTH TONED STUCCO AND DYNAMIC FINISH SYSTEMS. WEATHERING BANDS ACCENTING BUILDING HEIGHTS IS STRONGLY ENCOURAGED AND SHALL OCCUR FIRST FOR METAL WITH EARTH TONED STUCCO AND DYNAMIC FINISH SYSTEMS. WEATHERING UPPER BUILDING LEVELS. BLUE TONED TRELLISES SHALL FURTHER ACCENT ENTRANCE & VERTICAL ELEMENTS TO CREATE A SHADOW TRANSITION BETWEEN ENTRY & EXIT AND MODEL TRADITIONAL DESIGN ELEMENTS OF NEW MEXICO.

SEE PLAN FOR SUBMISSION DRAWING #4.

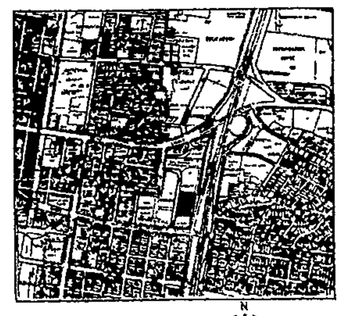

VICINITY MAP

SITE INFORMATION

SEE PLAN FOR SUBMISSION DRAWING #4.

HEART HOSPITAL SITE CALCULATIONS (TRACT 2B1)

TOTAL BUILDING SQUARE FOOTAGE	57,338
TOTAL SITE SQUARE FOOTAGE 213,494.456 (+ 9.6 ACRES)	
FAR	.27

HEART INSTITUTE MEDICAL OFFICE BUILDING (TRACT 5-01)

TOTAL BUILDING SQUARE FOOTAGE	36,550
TOTAL SITE SQUARE FOOTAGE 101,285.5 SF (+/- 2.3 ACRES)	
FAR	.36
PARKING DECK SQUARE FOOTAGE	32,795

SITE LIGHTING
PEDESTRIAN WALKWAY LIGHTING SHALL BE A MINIMUM OF 10 FOOT-CANDLES AND SHALL BE COORDINATED WITH EXISTING & PROPOSED PARKING AREA LIGHTING.

LANDSCAPING
NOTE TO SHEET 7 OF THIS SUBMITTAL FOR ADDITION INFORMATION ON EXISTING LANDSCAPING CRITERIA

LEGEND

EXISTING PROPERTY LINES
PROPOSED PROPERTY LINE

PARKING INFORMATION

SEE PLAN FOR SUBMISSION DRAWING #4.

HEART HOSPITAL PARKING CALCULATIONS (TRACT 2B2)

REQUIRED SPACES (85 NEW VISITORS)	38
CONFIRMED EXISTING SPACES	115

HEART INSTITUTE OFFICE BUILDING (TRACT 5B1) PARKING REQUIREMENTS

OFFICES
(CITY ZONING CODE PART 3, SECTION 14-16-3-1, PARAGRAPH A21)

FIRST FLOOR: 8,158 GSF x .85 = 6,935.3 NSF/200 =	34
SECOND FLOOR: 15,800 GSF x .85 = 13,240 NSF/200 =	66
THIRD FLOOR: 14,800 GSF x .85 = 12580 NSF/300 =	42
PARKING SPACES REQUIRED	112
FOR ALBUQUERQUE TRANSIT SYSTEM REDUCTION	10%
TOTAL PARKING SPACES REQUIRED (INCLUDING 8 ACCESSIBLE, WITH 1 VAN ACCESSIBLE)	101

SEE PLAN FOR BUILDING FOOTPRINT DRAWING #4.

TOTAL PARKING SPACES PROVIDED (183 + 63) (INCLUDING 8 ACCESSIBLE, WITH 4 VAN ACCESSIBLE)	246
COMPACT SPACES ALLOWED: 246 x 25%	55
COMPACT SPACES PROVIDED	45

ALL COMPACT PARKING SPACES WILL BE 8'-6"W x 20'-0"L MIN.

FOR TRACT 2B1

BICYCLE PARKING REQUIREMENTS
TOTAL BICYCLE SPACES REQUIRED: 101/20 = 5
TOTAL BICYCLE SPACES PROVIDED: 5

SEE PLAN FOR SUBMISSION DRAWING #4.

PARKING & ACCESS EASEMENT
SOME PARKING AND DRIVE ACCESS EASEMENTS RETAINED ON TRACT 2B2 (HEART HOSPITAL) AND TRACT 2B1 (HEART INSTITUTE OFFICE BUILDING) SHALL BE EXCLUDED IN PLAT.

TRACT 2B2

TRACT 2B1

CASE NUMBER:

THIS SITE DEVELOPMENT PLAN IS CONSISTENT WITH THE PLAN APPROVED AT THE _____ 2002 ENVIRONMENTAL PLANNING COMMISSION HEARING

TRAFFIC ENGINEER, TRANSPORTATION DIVISION

CITY ENGINEER/AMAFCA

PUBLIC WORKS, UTILITY DIVISION

DESIGN AND DEVELOPMENT DEPARTMENT, CIP

CITY PLANNER, PLANNING DIVISION

INTERNALLY ILLUMINATED METAL SIGNAGE

EXISTING MONUMENT SIGNS WILL BE MODIFIED TO REFER ONLY TO TRACT 2B1

Example Monument Sign

N.T.S.

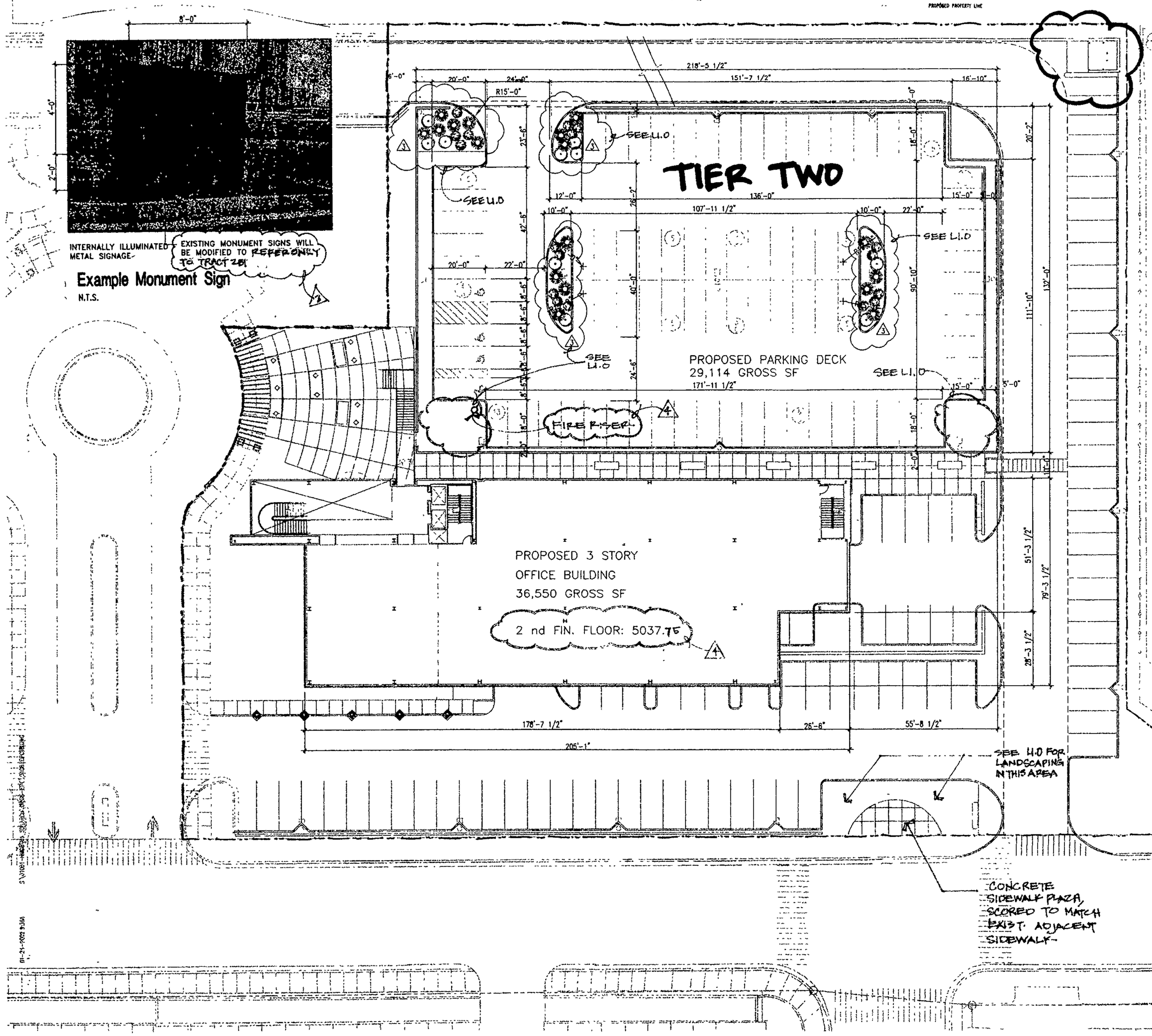

Tract 2B1 Site Development Plan for Building Permit

1"=20'-0" DECK PLAN

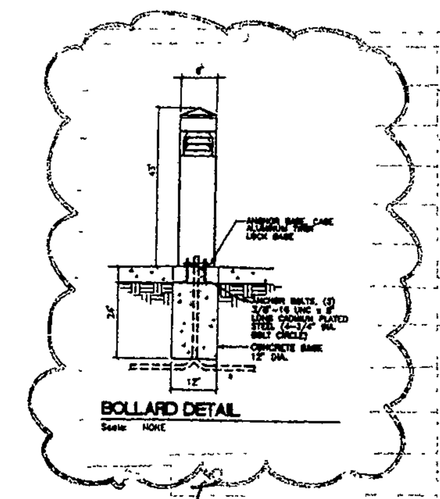

BOLLARD DETAIL

DRB CONDITION

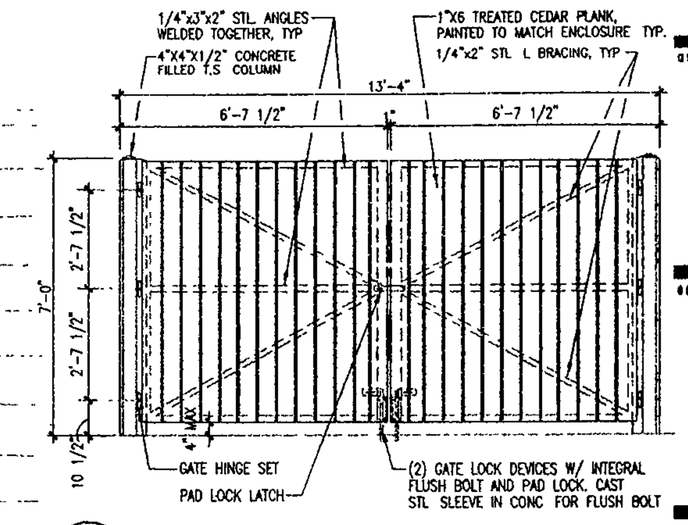

Refuse Enclosure Elevation

3/8"=1'-0" < X-02DUMP3.DWG >

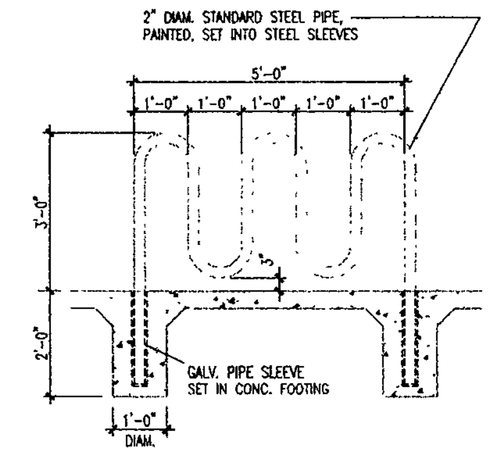

Section Detail

1/2"=1'-0" < 02BIKE01.DWG >

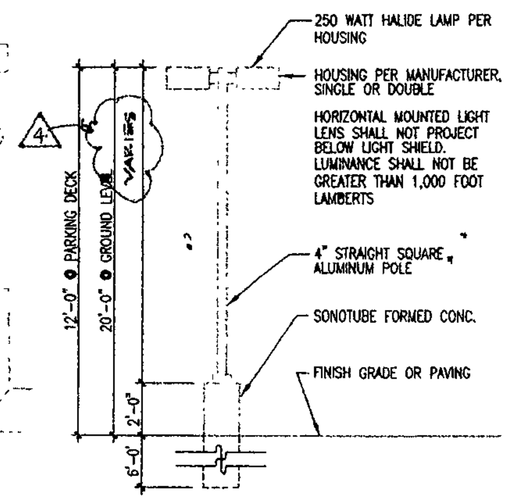

Light Pole Elevation

1/4"=1'-0" < Y-LIGHT.DWG >

architecture
interior
planning
engineering

Dekker
Perich
Sabatini

6801 Jefferson NE
Suite 100
Albuquerque, NM 8710

505 761-9700
fax 761-4222
dps@dpsabq.com

architect

engineer

DRB Submittal

JUNE 26, 2002

project

Heart Institute Medical Office Building

Albuquerque, NM 87102

revisions
1 8-19-02 NEIGHBORHOOD ASSOC COMM
2 6-25-02 APCA/ARCHITECTURAL REVISION TO BE APPROVED FRI
3
4

plotted: 01-24-2002 9:36A
S:\01081-HMOB\01 SD\ARCH\DWGS-EPC\01081E

drawn by

reviewed by

date 6-26-02

project no. #1005916

drawing name

Tract 2B1
Site Development Plan
for Building Permit

sheet no.

A4

3 of 9

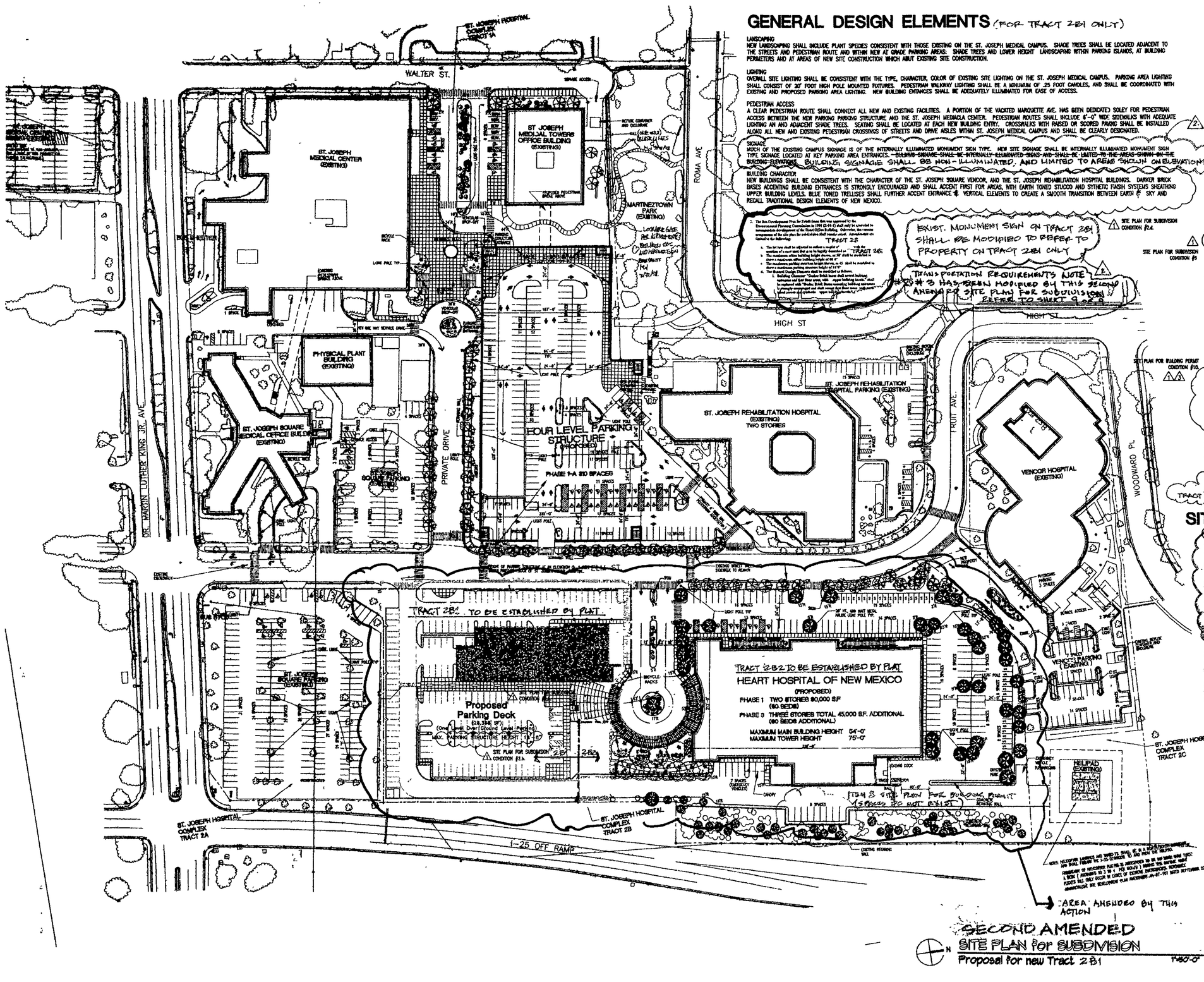

GENERAL DESIGN ELEMENTS (FOR TRACT 2B1 ONLY)

LANDSCAPING
NEW LANDSCAPING SHALL INCLUDE PLANT SPECIES CONSISTENT WITH THOSE EXISTING ON THE ST. JOSEPH MEDICAL CAMPUS. SHADE TREES SHALL BE LOCATED ADJACENT TO THE STREETS AND PEDESTRIAN ROUTE AND WITHIN NEW AT GRADE PARKING AREAS. SHADE TREES AND LOWER HEIGHT LANDSCAPING WITHIN PARKING ISLANDS, AT BUILDING PERIMETERS AND AT AREAS OF NEW SITE CONSTRUCTION WHICH ABUT EXISTING SITE CONSTRUCTION.

LIGHTING
OVERALL SITE LIGHTING SHALL BE CONSISTENT WITH THE TYPE, CHARACTER, COLOR OF EXISTING SITE LIGHTING ON THE ST. JOSEPH MEDICAL CAMPUS. PARKING AREA LIGHTING SHALL CONSIST OF 20' FOOT HIGH POLE MOUNTED FIXTURES. PEDESTRIAN WALKWAY LIGHTING SHALL BE A MINIMUM OF .25 FOOT CANDLES, AND SHALL BE COORDINATED WITH EXISTING AND PROPOSED PARKING AREA LIGHTING. NEW BUILDING ENTRANCES SHALL BE ADEQUATELY ILLUMINATED FOR EASE OF ACCESS.

PEDESTRIAN ACCESS
A CLEAR PEDESTRIAN ROUTE SHALL CONNECT ALL NEW AND EXISTING FACILITIES. A PORTION OF THE VACATED MARQUETTE AVE. HAS BEEN DEDICATED SOLEY FOR PEDESTRIAN ACCESS BETWEEN THE NEW PARKING PARKING STRUCTURE AND THE ST. JOSEPH MEDIACLA CENTER. PEDESTRIAN ROUTES SHALL INCLUDE 8'-0" WIDE SIDEWALKS WITH ADEQUATE LIGHTING AN AND ADJACENT SHADE TREES. SEATING SHALL BE LOCATED AT EACH NEW BUILDING ENTRY. CROSSWALKS WITH RAISED OR SCORED PAVING SHALL BE INSTALLED ALONG ALL NEW AND EXISTING PEDESTRIAN CROSSINGS OF STREETS AND DRIVE AISLES WITHIN ST. JOSEPH MEDICAL CAMPUS AND SHALL BE CLEARLY DESIGNATED.

SIGNAGE
MUCH OF THE EXISTING CAMPUS SIGNAGE IS OF THE INTERNALLY ILLUMINATED MONUMENT SIGN TYPE. NEW SITE SIGNAGE SHALL BE INTERNALLY ILLUMINATED MONUMENT SIGN TYPE SIGNAGE LOCATED AT KEY PARKING AREA ENTRANCES. ~~BUILDING SIGNAGE SHALL BE INTERNALLY ILLUMINATED SIGNS AND SHALL BE LIMITED TO THE AREAS SHOWN ON THE BUILDING ELEVATIONS.~~ BUILDING SIGNAGE SHALL BE NON-ILLUMINATED, AND LIMITED TO AREAS SHOWN ON ELEVATIONS

BUILDING CHARACTER
NEW BUILDINGS SHALL BE CONSISTENT WITH THE CHARACTER OF THE ST. JOSEPH SQUARE VENCOR, AND THE ST. JOSEPH REHABILITATION HOSPITAL BUILDINGS. DARKER BRICK BASES ACCENTING BUILDING ENTRANCES IS STRONGLY ENCOURAGED AND SHALL ACCENT FIRST FOR AREAS, WITH EARTH TONED STUCCO AND SYTHETIC FINISH SYSTEMS SHEATHING UPPER BUILDING LEVELS. BLUE TONED TRELLISES SHALL FURTHER ACCENT ENTRANCE & VERTICAL ELEMENTS TO CREATE A SMOOTH TRANSITION BETWEEN EARTH & SKY AND RECALL TRADITIONAL DESIGN ELEMENTS OF NEW MEXICO.

2. The Site Development Plan for Subdivision was approved by the Development Review Commission in 1994 (94-91-1) shall only be amended to accommodate development of the Heart Office Building. Otherwise, the remaining components of the site plan for subdivision shall remain valid. Amendments are limited to the following:

TRACT 2B

a. The lot line shall be adjusted to reflect a replat of Tract 2B1 with the creation of a new tract that is to be legally described as Tract 2B2.
b. The maximum office building height shall be 54' (54' shall be modified to show a maximum office building height of 66 4")
c. The maximum parking structure height shall be 45 (shall be modified to show a maximum parking structure height of 15'6")
d. The Heart Design Elements shall be modified as follows.
1. Building Character "Darker brick base shall accent building" shall be replaced with "Darker brick base shall accent building entrances."
2. Signage "Building signage shall be internally illuminated signs and shall be limited to the areas shown on the building elevations" shall be replaced with "Building signage shall be non-illuminated, and limited to areas shown on elevations."

EXIST. MONUMENT SIGN ON TRACT 2B1 SHALL BE MODIFIED TO REFER TO PROPERTY ON TRACT 2B1 ONLY

TRANSPORTATION REQUIREMENTS NOTE #3 HAS BEEN MODIFIED BY THIS SECOND AMENDED SITE PLAN FOR SUBDIVISION REFER TO SHEET 9 OF 9

VICINITY MAP

J14,J15,K14,K15 1"=750'-0"

PARKING INFORMATION

HEART HOSPITAL PARKING CALCULATIONS (TRACT 2B2)

SITE PLAN FOR SUBDIVISION CONDITION #5

REQUIRED SPACES (60 BED HOSPITAL)	30
CONFIRMED EXISTING SPACES	125

HEART INSTITUTE OFFICE BUILDING (TRACT 2B1 PARKING REQUIREMENTS)

OFFICES
(CITY ZONING CODE PART 3, SECTION 14-16-3-1, PARAGRAPH A21)

FIRST FLOOR: 6,150 GSF x .85 = 5,227.5 NSF/200 =	26
SECOND FLOOR: 15,800 GSF x .85 = 13,280 NSF/300 =	44
THIRD FLOOR: 14,800 GSF x .85 = 12580 NSF/300 =	42
PARKING SPACES REQUIRED	142
10% ALBUQUERQUE TRANSIT SYSTEM REDUCTION	10%
TOTAL PARKING SPACES REQUIRED (INCLUDING, 8 ACCESSIBLE, WITH 1 VAN ACCESSIBLE)	101
TOTAL PARKING SPACES PROVIDED: (183 + 83) (INCLUDING, 8 ACCESSIBLE, WITH 4 VAN ACCESSIBLE)	266
COMPACT SPACES ALLOWED: 266 x 25%	66
COMPACT SPACES PROVIDED:	45

ALL COMPACT PARKING SPACES WILL BE 8'-0"W x 20'-0"L MIN. FOR TRACT 2B1.

SITE PLAN FOR BUILDING PERMIT CONDITION #10.

MODIFIED DURING CONSTRUCTION PER. LETTER 7/18/03

BICYCLE PARKING REQUIREMENTS
TOTAL BICYCLE SPACES REQUIRED: 101/20 = 5
TOTAL BICYCLE SPACES PROVIDED: 5

SITE PLAN FOR SUBDIVISION CONDITION #2.A.

PARKING & ACCESS EASEMENT
CROSS PARKING AND CROSS ACCESS EASMENTS BETWEEN TRACT 2B2 (HEART HOSPITAL) AND TRACT 2B1 (HEART INSTITUTE OFFICE BUILDING) SHALL BE ESTABLISHED BY PLAT.

SITE INFORMATION

SITE PLAN FOR SUBDIVISION CONDITION #5.

HEART HOSPITAL SITE CALCULATIONS (TRACT 2B2)

TOTAL BUILDING SQUARE FOOTAGE	57,328
TOTAL SITE SQUARE FOOTAGE: 213,494.4 SF (4.9 ACRES)	
FAR	.27

HEART INSTITUTE MEDICAL OFFICE BUILDING (TRACT 2B1)

TOTAL BUILDING SQUARE FOOTAGE	36,550
TOTAL SITE SQUARE FOOTAGE: 101,285.5 SF (2.32 ACRES)	
FAR	.36
PARKING DECK SQUARE FOOTAGE	28,765

SITE LIGHTING
PEDESTRIAN WALKWAY LIGHTING SHALL BE A MINIMUM OF .25 FOOTCANDLES AND SHALL BE COORDINATED WITH EXISTING & PROPOSED PARKING AREA LIGHTING.

LANDSCAPING
REFER TO SHEET 7 OF THIS SUBMITTAL FOR ADDITIONAL INFORMATION ON EXISTING LANDSCAPING CONDITIONS

LEGEND

EXISTING PROPERTY LINES AS PER LATEST PLAT
PROPOSED PROPERTY LINE

02EPC 00140
02DRB - 00533
CASE NUMBER: 1000596

THIS SITE DEVELOPMENT PLAN IS CONSISTENT WITH THE PLAN APPROVED AT THE March 22 2002 ENVIRONMENTAL PLANNING COMMISSION HEARING.

TRAFFIC ENGINEER, TRANSPORTATION DIVISION	7-17-02
CITY ENGINEER/AMAFCA	6/26/02
PUBLIC WORKS, UTILITY DIVISION	6/26/02
PARKS AND RECREATION	6/24/02
CITY PLANNER, PLANNING DIVISION	7/25/02
	7/24/02

Dekker Perich Sabatini
6801 Jefferson
Suite 100
Albuquerque, NM
505 761-9700
fax 761-4222
dps@dpsdbq.com
ARCHITECT
ENGINEER

DRB Submittal
JUNE 26, 2002

HEART INSTITUTE MEDICAL OFFICE BUILDING

REVISIONS
1 4-1-02 EPC FINDINGS & CONDITIONS B-2
2 6-19-02 HEIGHT REDUCTION
3 6-25-02 ARCHITECTURAL REVISIONS
4 EPC APPROVED DRAWINGS

DRAWN BY
REVIEWED BY
DATE
PROJECT NO. 6 of A# 1
DRAWING NAME
SITE PLAN for SUBDIVISION
SHEET NO.
A1

GENERAL DESIGN ELEMENTS (TRACT 2 1 (ONLY)

LANDSCAPING
NEW LANDSCAPING SHALL INCLUDE PLANT SPECIES CONSISTENT WITH THOSE EXISTING ON THE ST. JOSEPH'S MEDICAL CAMPUS. SHADE TREES SHALL BE LOCATED ADJACENT TO THE STREETS AND PEDESTRIAN SQUARE AND WITHIN NEW AT GRADE PARKING AREAS. SHRUB BEDS AND LOWER HEIGHT LANDSCAPING WITHIN PARKING BUFFERS, AT BUILDING FOUNDATIONS AND AT AREAS OF NEW SITE CONSTRUCTION WHICH ABUT EXISTING SITE CONSTRUCTION.

LIGHTING
OVERALL SITE LIGHTING SHALL BE CONSISTENT WITH THE TYPE, CHARACTER, COLOR OF EXISTING SITE LIGHTING ON THE ST. JOSEPH'S MEDICAL CAMPUS. PARKING AREA LIGHTING SHALL CONSIST OF 30' POLE MOUNT POLE MOUNTED FIXTURES. PEDESTRIAN WALKWAY LIGHTING SHALL BE A MINIMUM OF .25 FOOT CANDLES, AND SHALL BE COORDINATED WITH EXISTING AND PROPOSED PARKING AREA LIGHTING. NEW BUILDING ENTRANCES SHALL BE ADEQUATELY ILLUMINATED FOR EASE OF ACCESS.

PEDESTRIAN ACCESS
A CLEAR PEDESTRIAN SQUARE SHALL CONNECT ALL NEW AND EXISTING FACILITIES. A PORTION OF THE WALKED MARKETIC INC. MRE BUCH DEDICATED ONLY FOR PEDESTRIAN ACCESS BETWEEN THE NEW PARKING PARKING STRUCTURE AND THE ST. JOSEPH'S MEDICAL CENTER. PEDESTRIAN BENCHES SHALL INCLUDE 6'-0" WIDE SIDEWALKS WITH ADEQUATE LEGROOM AND ADJACENT SHADE TREES. SEATING SHALL BE LOCATED AT EACH NEW BUILDING ENTRY. CROSSWALKS WITH RAMPS OR RAISED PAVING SHALL BE INSTALLED ALONG ALL NEW AND EXISTING PEDESTRIAN CROSSWALKS, AT STREETS AND WALK AISLES WITHIN ST. JOSEPH'S MEDICAL CAMPUS AND SHALL BE CLEARLY DESIGNATED.

SIGNAGE
MUCH OF THE EXISTING CAMPUS SIGNAGE IS OF THE INTERNALLY ILLUMINATED MONUMENT BOX TYPE. NEW SITE SIGNAGE SHALL BE INTERNALLY ILLUMINATED MONUMENT SIGN TYPE SIGNAGE LOCATED AT KEY ENTRANCE AREA ENTRANCES. BUILDING SIGNAGE SHALL BE NON ILLUMINATED & LIMITED TO A-B-A SHOWN ON ELEVATIONS

BUILDING CHARACTER
NEW BUILDINGS SHALL BE CONSISTENT WITH THE CHARACTER OF THE ST. JOSEPH SQUARE VENTURE, AND THE ST. JOSEPH REHABILITATION HOSPITAL BUILDINGS. SMOOTH BRICK SHALL BE THE PRIMARY BUILDING MATERIAL. ACCENTS SHALL BE EXTERIOR INSULATION AND FINISH SYSTEM (EIFS) OR SIMILAR. ENTRANCES SHALL BE STRONGLY DECORATIVE AND SHALL ACCENT THOSE FOR ANCILLARY WITH EARTH TONED STUCCO AND SYNTHETIC FINISH SYSTEMS (EIFS) OR SIMILAR. ENTRANCES SHALL BE STRONGLY DECORATIVE AND SHALL ACCENT THOSE FOR ANCILLARY WITH EARTH TONED STUCCO AND SYNTHETIC FINISH SYSTEMS (EIFS) OR SIMILAR. UPPER BUILDING LEVELS, BLUE TONED WALLBACK SHALL FURTHER ACCENT ENTRANCES. VERTICAL ELEMENTS TO CREATE A SMOOTH TRANSITION BETWEEN EAST SKY AND RETAIL TRADITIONAL DESIGN ELEMENTS OF NEW MEXICO.

SITE PLAN FOR BUILDING PERMIT CONDITION #1a

PARKING INFORMATION

SITE PLAN FOR BUILDING PERMIT CONDITION #1b

HEART HOSPITAL PARKING CALCULATIONS (TRACT 2B2)
TOTAL SPACES REQUIRED 36
CONFIRMED EXISTING SPACES 125

TRACT 2B1 PARKING REQUIREMENTS

HEART INSTITUTE OFFICE BUILDING
OFFICES
(DRY CLEANING CODE PART 2, SECTION 14-16-3-1, PARAGRAPH A21)
FIRST FLOOR: 6,150 GSF x .66 = 5,217.5 NSF/300 = 26
SECOND FLOOR: 15,800 GSF x .85 = 13,380 NSF/300 = 44
THIRD FLOOR: 14,800 GSF x .86 = 13680 NSF/300 = 42
PARKING SPACES REQUIRED 112
NON ALBUQUERQUE TRANSIT SYSTEM REDUCTION 16%
TOTAL PARKING SPACES REQUIRED (INCLUDING 8 ACCESSIBLE WITH 1 VAN ACCESSIBLE) 101
TOTAL PARKING SPACES PROVIDED: (103 + 63) (INCLUDING 8 ACCESSIBLE, WITH 4 VAN ACCESSIBLE) 166
COMPACT SPACES ALLOWED: 248 x .35% 66
COMPACT SPACES PROVIDED: 45
ALL COMPACT PARKING SPACES WILL BE 8'-6"W x 20'-0"L MIN.
BICYCLE PARKING REQUIREMENTS
TOTAL BICYCLE SPACES REQUIRED: 101/20 = 5
TOTAL BICYCLE SPACES PROVIDED: 5

SITE PLAN FOR BUILDING PERMIT CONDITION #1c

PARKING & ACCESS EASEMENT TRACT 2B2
(SHARE PARKING AND SHARE ACCESS EASEMENT BETWEEN: ... (DRIVE PARKING) AND HEART INSTITUTE OFFICE BUILDING) SHALL BE ESTABLISHED IN PLAT

TRACT 2B1

SITE INFORMATION

SITE PLAN FOR BUILDING PERMIT CONDITION #1c

HEART HOSPITAL SITE CALCULATIONS (TRACT 2B2)
TOTAL GROSS BUILDING FOOTPRINT 37,223
TOTAL SITE SQUARE FOOTAGE 278,494.4 SF (4.9 ACRES)
FAR .27

HEART INSTITUTE MEDICAL OFFICE BUILDING (TRACT 2B1)
TOTAL GROSS BUILDING FOOTPRINT 36,550
TOTAL SITE SQUARE FOOTAGE 101,285.6 SF (2.32 ACRES)
FAR .36

PARKING INCLUDES SQUARE FOOTAGE 0.765

SITE LIGHTING
PEDESTRIAN WALKWAY LIGHTING SHALL BE A MINIMUM OF .25 FOOTCANDLES AND SHALL BE COORDINATED WITH EXISTING & PROPOSED PARKING AREA LIGHTING.

LANDSCAPING
REFER TO SHEET L1 OF THE SUBMITTAL FOR ADDITIONAL INFORMATION ON EXISTING LANDSCAPING REQUIRED.

LEGEND

EXISTING PROPERTY LINES
PROPOSED PROPERTY LINE

VICINITY MAP

CASE NUMBER: 1000596

02 DRB - 00535 02 EPC - 00141

THIS SITE DEVELOPMENT PLAN IS CONSISTENT WITH THE PLAN APPROVED AT THE March 22 2002 ENVIRONMENTAL PLANNING COMMISSION HEARING.

TRAFFIC ENGINEER, TRANSPORTATION DIVISION — 7-17-02
CITY ENGINEER/AMAFCA — 6/26/02
PUBLIC WORKS, UTILITY DIVISION — 6/26/02
DESIGN AND DEVELOPMENT DEPARTMENT, CIP — 6/26/02
CITY PLANNER, PLANNING DIVISION — 7/25/02

SITE LIGHTING
PEDESTRIAN WALKWAY LIGHTING SHALL BE A MINIMUM OF .25 FOOTCANDLES AND SHALL BE COORDINATED WITH EXISTING & PROPOSED PARKING AREA LIGHTING.

SITE DESIGN
SITE SHALL CONFORM TO DPM STANDARDS

SITE PLAN FOR BUILDING PERMIT CONDITION #7d

AFD PLANS CHECKING OFFICE
924-3611
APPROVED/DISAPPROVED
(HYDRANT(S) ONLY
SIGNATURE & DATE 6/28/02

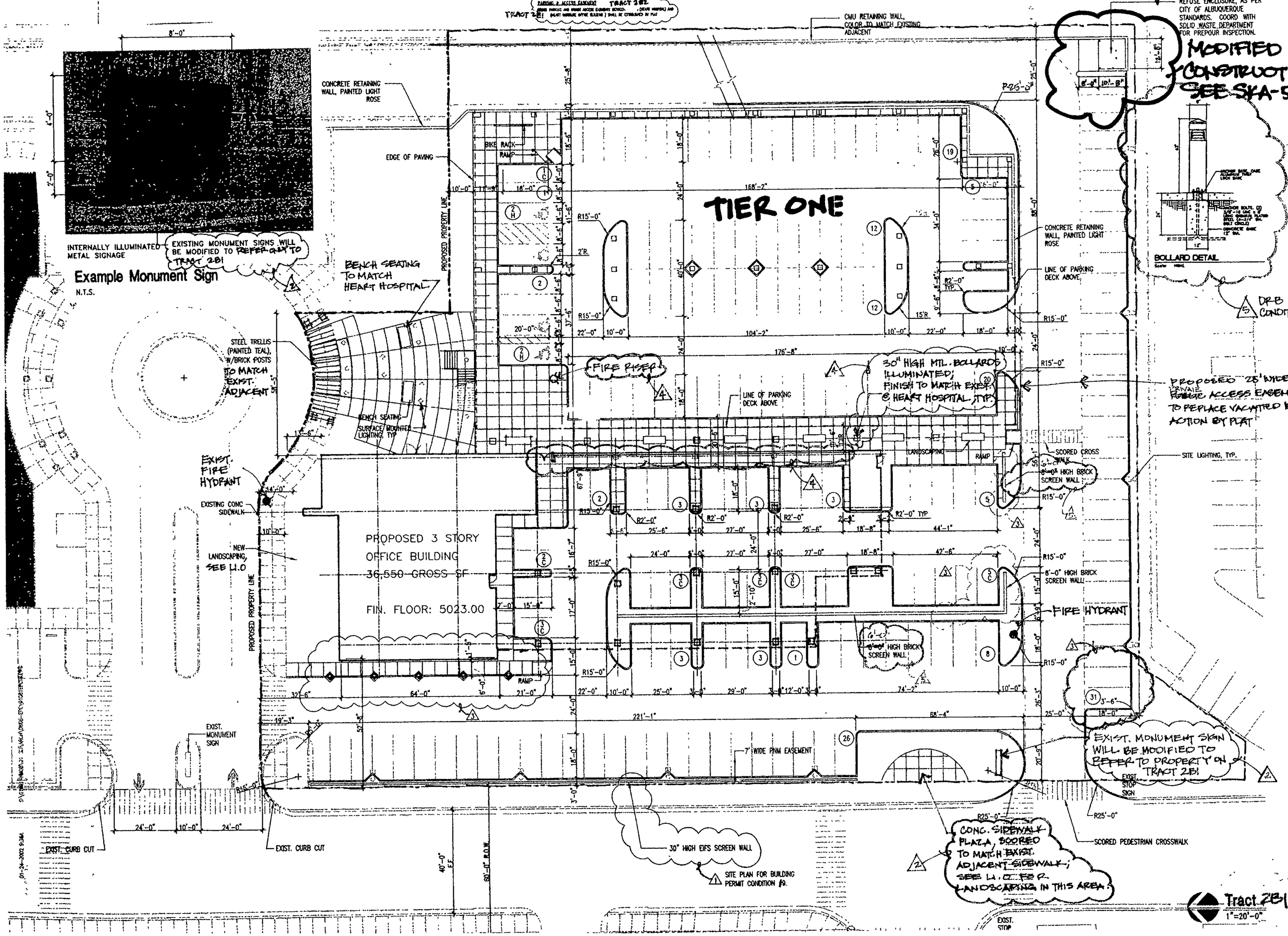

INTERNALLY ILLUMINATED METAL SIGNAGE

EXISTING MONUMENT SIGNS WILL BE MODIFIED TO REFER TO TRACT 2B1

Example Monument Sign

N.T.S.

MODIFIED DURING CONSTRUCTION, SEE SKA-52.

REFUSE ENCLOSURE, AS PER CITY OF ALBUQUERQUE STANDARDS. COORD WITH SOLID WASTE DEPARTMENT FOR PREPOUR INSPECTION.

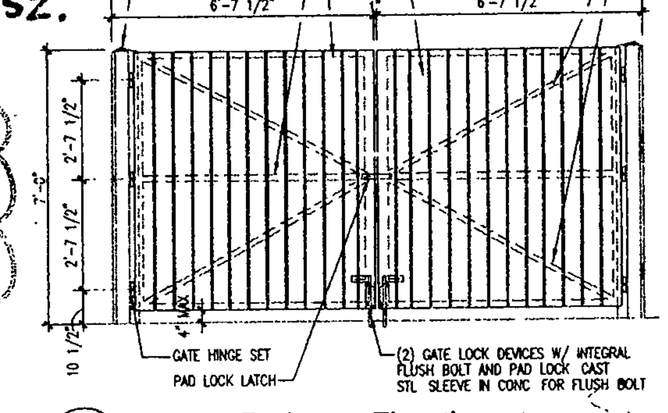

Refuse Enclosure Elevation

3/8"=1'-0" < X-02DUMPS.DWG >

DRB CONDITION

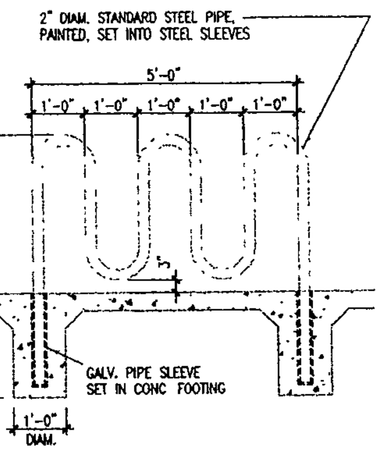

Section Detail

1/2"=1'-0" < 02BIKE01.DWG >

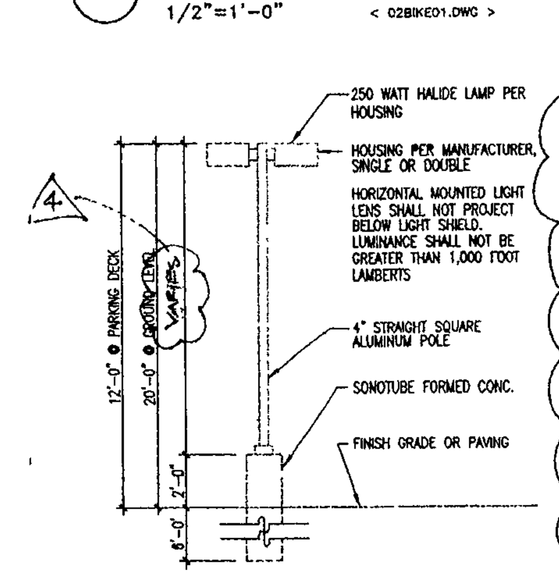

Light Pole Elevation

1/4"=1'-0" < X-LIGHT DWG >

ADMINISTRATIVE AMENDMENT #1 DATED 7-31-02, SHEETS A3.0 & A3.02 VARIOUS CHANGES WINDOW OPENINGS AND PARKING DECK OPENINGS.

Tract 2B1 Site Development Plan for Building Permit

1"=20'-0"

architect interior plann engineer
Dekker Perich Sabatini
6801 Jefferson NE
Suite 100
Albuquerque, NM 87
505 761-9700
fax 761-4222
dps@dpsabq.com

DRB Submittal JUNE 26, 2002

12-2-02 ADMIN PPP AMEND PIP

revisions
4-8-02 EPC FINDINGS AND CON 3-22-02
6-19-02 NEIGHBORHOOD ASSOC.
6-19-02 DRB REVIEW COMMENTS
6-26-02 ARCHITECT REVISION TO EPC PPP DRAWINGS

plotted: 01-24-2002 9:39A
S:\01081-HMOB\01 SD\ARCH\DWGS-EPC\01

drawn by
reviewed by
date 6-26-02
project no. 100596
drawing name
Tract 2B1 Site Development Pl for Building Permit

sheet no. A3

2 of

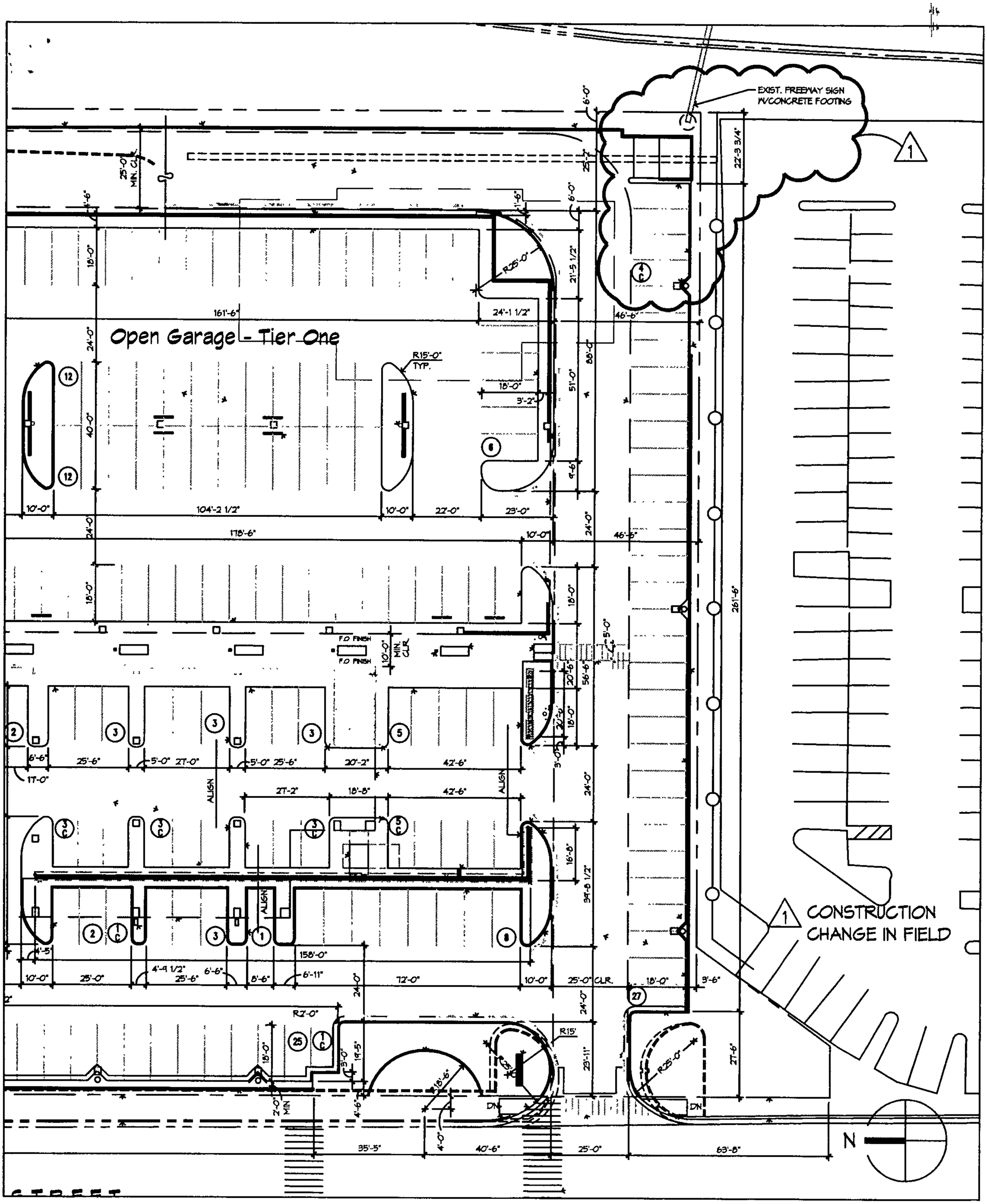

S:\01081-HMOB\Drawings\Arch\01081_A001.dwg, 07/10/2003 10:59:32 AM, curtis

architecture
interiors
planning
engineering

Dekker/Perich/Sabatini

6801 Jefferson NE
Suite 100
Albuquerque, NM 87109

505 761-9700
fax 761-4222
dps@dpsabq.com

TRAFFIC CIRCULATION LAYOUT

H.I.M.O.B.

502 ELM STREET NE
ALBUQUERQUE, NM 87109

REVISED PARKING LAYOUT

DRAWN BY	DPS	SCALE	NTS
REVIEWED BY	DPS	SKA-052	
DATE ISSUED	7-11-03		
PROJECT NO.	01081	1 NO.	1

City of Albuquerque
P.O. BOX 1293 ALBUQUERQUE, NEW MEXICO 87103

August 8, 2002

Bruce Stidworthy, PE
Bohannan Huston, Inc.
7500 Jefferson NE
Albuquerque, NM 87109

Re: St. Joseph Heart Institute Grading and Drainage Plan
Engineer's Stamp dated 7-23-02 (K15/D6F)

Dear Mr. Stidworthy,

Based upon the information provided in your submittal dated 7-26-02, the above referenced plan is approved for Building Permit and SO#19 Permit. Please attach a copy of this approved plan to the construction sets prior to sign-off by Hydrology.

A separate permit (SO19) is required for construction within City R/W. A copy of this approval letter must be on hand when applying for the excavation permit.

Also, prior to Certificate of Occupancy release, Engineer Certification per the DPM checklist will be required.

If you have any questions, you can contact me at 924-3986.

Sincerely,

Bradley L. Bingham

Bradley L. Bingham, PE
Sr. Engineer, Planning Dept.
Development and Building Services

C: file

THE CITY OF ALBUQUERQUE IS AN EQUAL OPPORTUNITY/REASONABLE ACCOMMODATION EMPLOYER

332 MURIEL NE, ALBUQUERQUE, NM 87123
PH. (505) 296-7529 FAX. (505) 292-6190
NM Licenses #25282
www.accustripe.com

ACCUSTRIPE, INC

01081
G/COR
7/9/03

Fax and E-Mail

To: Marty Hibbs **From:** DAN MARTINEZ

CC: Curtis Proctor 761-4222

Fax: ~~842-5410~~ 243-9678 **Pages:** 4

Phone: 980-0750 **Date:** 7/9/2003

Re: Heart Institute Medical Office **Job #:** 21636

☐ **Urgent** x **For Review** ☐ **Please Comment** ☐ **Please Reply** ☐ **Please Recycle**

Dear Marty:

This letter is in response to the handicap installation on the ground floor of the parking garage on the above referenced project. I have spoken to Curtis Proctor with Dekker Perich and have explained to him the purpose of our installation at this height. He has asked me to respond back to you and I will fax a copy to him as well.

Please note that our submittal on all signs, including handicapped signs call for mounting height to be 7 ft from the bottom of the sign. This in accordance with the following guidelines:

1. ANSI sec. 4.6.2, "such signs shall not be obscured by a vehicle parked in the space."

* 2. Manual of Uniform Traffic Control Devices (MUTCD), "where parking or pedestrian movements occur, the clearance to the bottom of the sign shall be at least 7 ft. (document attached)

3. Americans with Disabilities (ADA) Guidelines—"A sign with the international symbol of accessibility must be located in front of the parking space and mounted high enough so it is not hidden by a vehicle parked in the space." (document attached)

The 7 ft height far exceeds contract drawing details and city requirement, and we recommend this height to eliminate pedestrians cutting themselves on the signs as has been the case in the past. If the lower heights are required, we request a release of liability in case of accidents.

Sincerely,

Dan Martinez
President

ACCUSTRIPE, INC.

Specializing in Parking Lot Striping
332 Muriel N.E.
Albuquerque, NM 87123
(505) 296-7529
FAX (505) 292-6190

Sign Installation: per Manual on Uniform Traffic Control Devices (MUTCD 2000)

ROADSIDE SIGN
RURAL DISTRICT

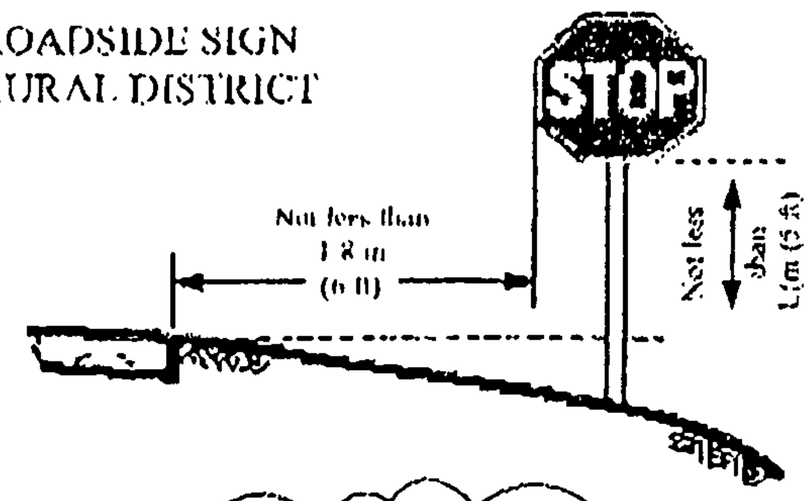

ROADSIDE SIGN
RURAL DISTRICT

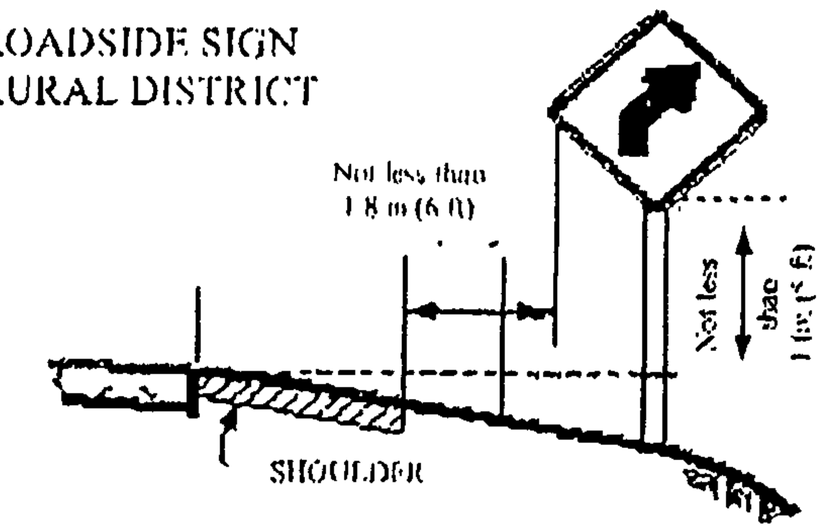

ROADSIDE SIGN
BUSINESS OR
RESIDENCE DISTRICT

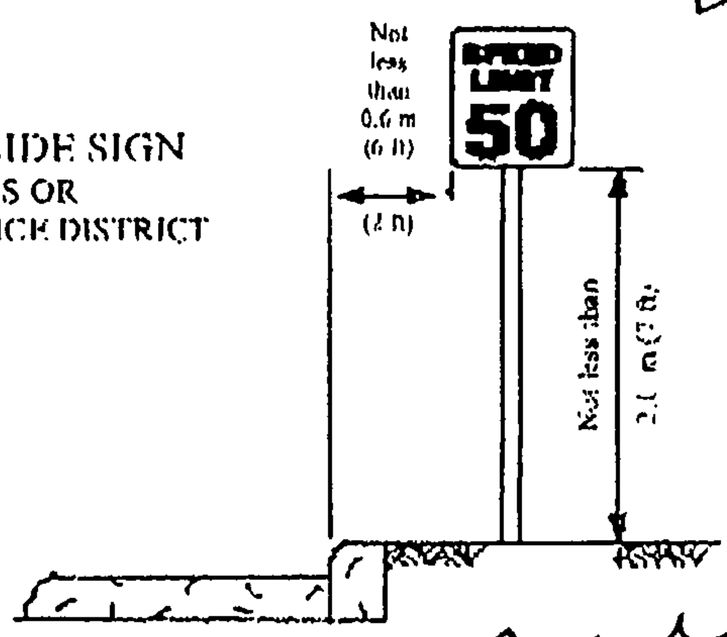

WARNING SIGN
WITH ADVISORY
SPEED PLAQUE
RURAL DISTRICT

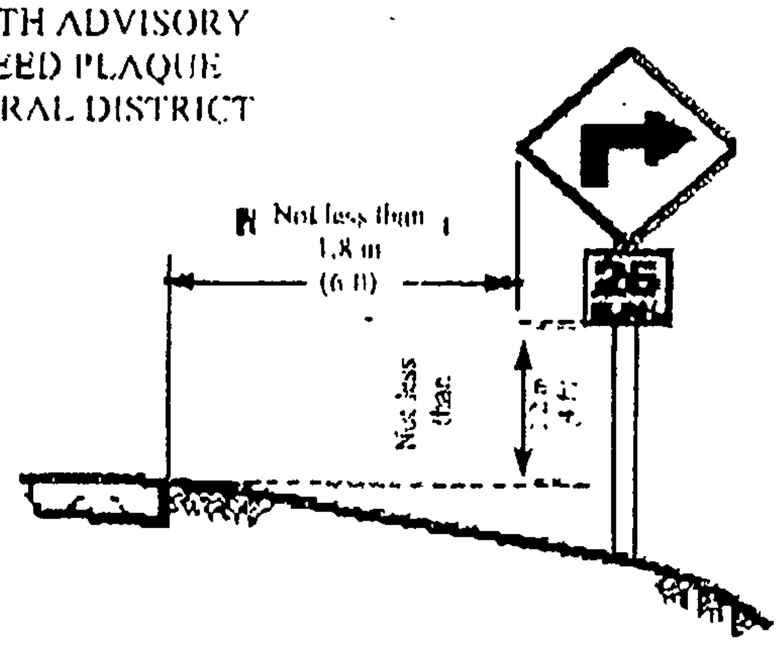

<u>Section 2A.18 Mounting Height</u>
<u>Standard:</u>
Signs installed at the side of the road in rural districts shall be at least 1.5 m (5 ft), measured from the bottom of the sign to the near edge of the pavement. <u>Where parking or pedestrian movements occur, the clearance to the bottom of the sign shall be at least 2.1 m (7 ft).</u>
Directional signs on expressways and freeways shall be installed with a minimum height of 2.1 m (7 ft). If a secondary sign is mounted below another sign, the major sign shall be installed at least 2.4 m (8 ft) and the secondary sign at least 1.5 m (5 ft) above the level of the pavement edge. All route signs, warning signs, and regulatory signs on expressways and freeways shall be at least 2.1 m (7 ft) above the level of the pavement edge.
Overhead signs shall provide a vertical clearance of not less than 5.1 m (17 ft) to the sign, light fixture, or sign bridge, over the entire width of the pavement and shoulders except where a lesser vertical clearance is used for the design of other structures. The vertical clearance to overhead sign structures or supports shall not be greater than 0.3 m (1 ft) in excess of the minimum clearance of other structures.

Accessible Parking

When parking is provided for the public, designated accessible parking spaces must be provided, if doing so is readily achievable. An accessible parking space must have space for the vehicle and an additional space located either to the right or to the left of the space that serves as an access aisle. This aisle is needed to permit a person using a wheelchair, electric scooter, or other mobility device to get out of their car or van. A sign with the international symbol of accessibility must be located in front of the parking space and mounted high enough so it is not hidden by a vehicle parked in the space.

Accessible parking spaces should be the spaces closest to the accessible entrance and be located on level ground. If it is not readily achievable to locate accessible parking in the closest spaces due to sloped pavement or other existing conditions, then the closest level area should be selected. An accessible route must be provided between the access aisle and the accessible building entrance. This route must have no steps or steeply sloped surfaces and it must have a firm, stable, slip-resistant surface.

Van accessible spaces must have an access aisle that is **at least eight-feet wide** and be designated by a sign with the international symbol and "van accessible." There should be a vertical clearance of at least 98 inches on the vehicular route to the space, at the parking space, and along the vehicular route to an exit.

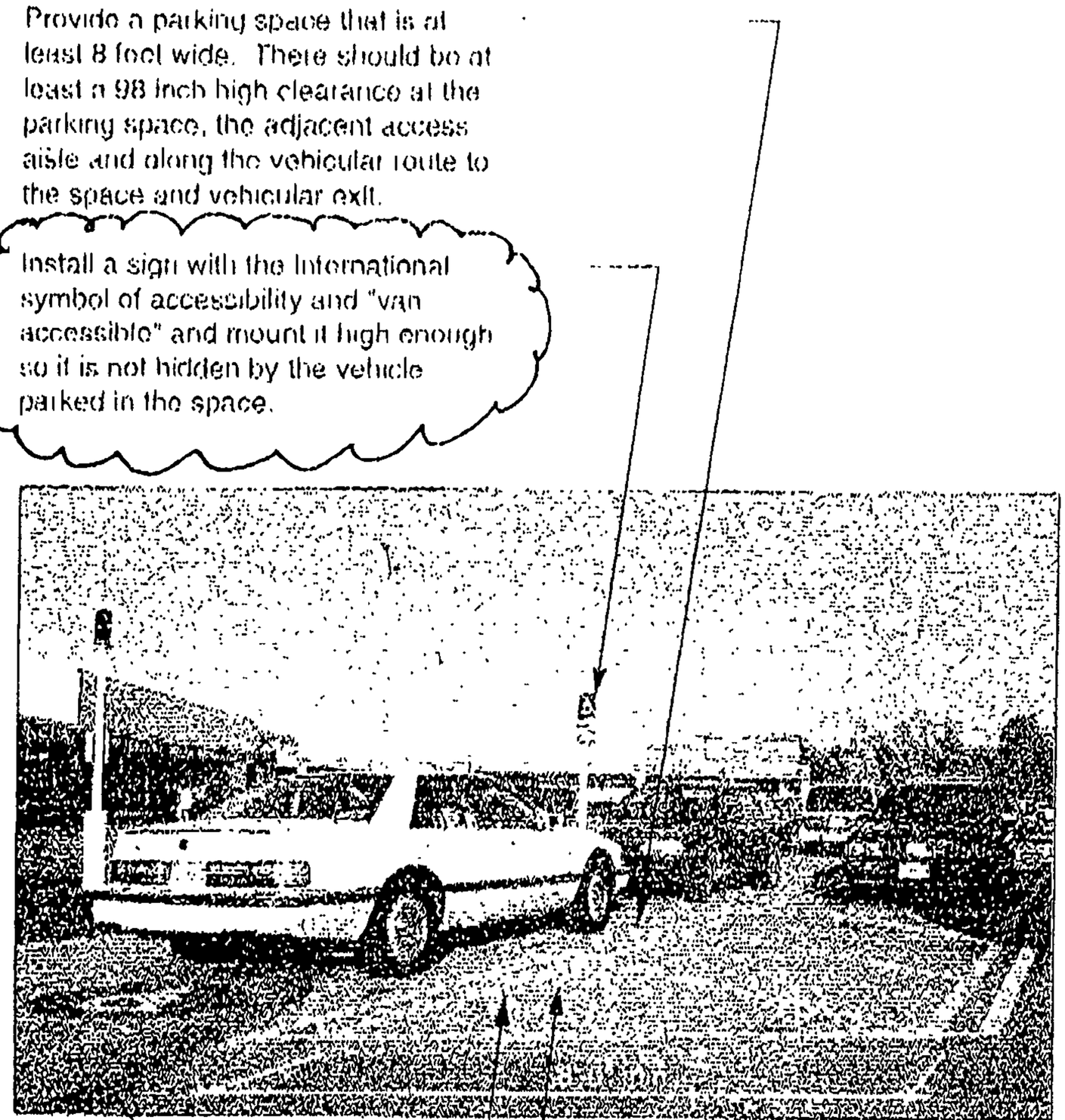

A Van Accessible Parking Space

(1 of 8 of all accessible parking spaces, but at least one, must be van accessible
Although designated a van accessible space, cars may use the space too.)

DRAINAGE AND TRANSPORTATION INFORMATION SHEET

(REV. 1/28/2003rd)

K-15/D6F

PROJECT TITLE: HEART INSTITUTE MEDICAL OFFICE BUILDING ZONE MAP/DRG. FILE #: ~~D3/D~~

DRB #: 02DRB-00533 EPC#: 02EPC 00140 WORK ORDER#:

LEGAL DESCRIPTION: TRACT 2B1 ST. JOSEPHS MEDICAL CAMPUS

CITY ADDRESS: 502 ELM ST NE 87102

ENGINEERING FIRM: CONTACT:
ADDRESS: PHONE:
CITY, STATE: ZIP CODE:

OWNER: HEART OFFICE LLC CONTACT: JACK WESTMAN
ADDRESS: 4600B MONTGOMERY BLVD STE 103 PHONE: 883-5221
CITY, STATE: ALBUQUERQUE, NM 87109 ZIP CODE:

ARCHITECT: DEKKER PERICH SABATINI CONTACT: CURTIS PROCTOR
ADDRESS: 6801 JEFFERSON BLVD #100 PHONE: 761-9700
CITY, STATE: ALBUQUERQUE, NM ZIP CODE: 87109

SURVEYOR: CONTACT:
ADDRESS PHONE:
CITY, STATE: ZIP CODE:

CONTRACTOR: BRADBURY STAMM CONSTRUCTION CONTACT: MARTY HIBBS
ADDRESS: 3701 PASEO DEL NORTE PHONE: 765-1200
CITY, STATE: ALBUQUERQUE, NM ZIP CODE: 87184

CHECK TYPE OF SUBMITTAL:

_____ DRAINAGE REPORT
_____ DRAINAGE PLAN 1st SUBMITTAL, ***REQUIRES TCL or equal***
_____ DRAINAGE PLAN RESUBMITTAL
_____ CONCEPTUAL GRADING & DRAINAGE PLAN
_____ GRADING PLAN
_____ EROSION CONTROL PLAN
_____ ENGINEER'S CERTIFICATION (HYDROLOGY)
_____ CLOMR/LOMR
_X_ TRAFFIC CIRCULATION LAYOUT (TCL)
_____ ENGINEERS CERTIFICATION (TCL)
_____ ENGINEERS CERTIFICATION (DRB APPR. SITE PLAN)
____ OTHER

CHECK TYPE OF APPROVAL SOUGHT:

_____ SIA / FINANCIAL GUARANTEE RELEASE
_____ PRELIMINARY PLAT APPROVAL
_____ S. DEV. PLAN FOR SUB'D. APPROVAL
_____ S. DEV. PLAN FOR BLDG. PERMIT APPROVAL
_____ SECTOR PLAN APPROVAL
_____ FINAL PLAT APPROVAL
_____ FOUNDATION PERMIT APPROVAL
_____ BUILDING PERMIT APPROVAL
_X_ CERTIFICATE OF OCCUPANCY (PERM.)
_____ CERTIFICATE OF OCCUPANCY (TEMP.)
_____ GRADING PERMIT APPROVAL
_____ PAVING PERMIT APPROVAL
_____ WORK ORDER APPROVAL
_____ OTHER (SPECIFY)

WAS A PRE-DESIGN CONFERENCE ATTENDED:
_____ YES
_X_ NO
_____ COPY PROVIDED

RECEIVED
JUL 18 2003
HYDROLOGY SECTION

DATE SUBMITTED: BY:

Requests for approvals of Site Development Plans and/or Subdivision Plats shall be accompanied by a drainage submittal. The particular nature , location and scope ot the proposed development defines the degree of drainage detail. One or more of the following levels of submittal may be required based on the following:

1. **Conceptual Grading and Drainage Plan**: Required for approval of Site Development Plans greater than five (5) acres and Sector Plans.
2. **Drainage Plans**: Required for building permits, grading permits, paving permits and site plans less than five (5) acres.
3. **Drainage Report**: Required for subdivisions containing more than ten (10) lots or constituting five (5) acres or more.

Dekker/Perich/Sabatini
architecture
interiors
planning
engineering

July 18, 2003

Mr. Richard Dourte
City of Albuquerque
Public Works Department - Transportation Development Services Section
Albuquerque, New Mexico 87103

Re: Architect's Certification for Permanent C.O.
Heart Institute Medical Office Building
502 Elm Street
Albuquerque, NM 87102
Case No. 1000596

Dear Mr. Dourte:

Attached is a copy of the approved Second Amended Site Plan for Subdivision. Our office has visited the site at regular intervals appropriate to the stages of construction. Such visits and observations are not intended to be an exhaustive check or detailed inspection of the Contractor's work but rather are to allow our office, as experienced professionals, to become generally familiar with the work in progress and to determine, in general, if the work is proceeding in accordance with the Contact Documents.

Based on our observations we hereby certify that this site has been constructed in substantial compliance with the approved Second Amended Site Plan for Subdivision, with the only two notable exceptions:

1. Trash Enclosure relocation:
   The trash enclosure was moved 2'-0" west to avoid undermining the concrete footing of an existing overhead highway sign. As a result, four parking stalls were stripped as compact stalls instead of standard stalls. This change increased our total from 45 compact stalls to 49. Our maximum allowable is 66 compact stalls. (see enclosures)
2. Height of ADA signage:
   We have pole-mounted signage in the public way. As per ADA the signage was designed to be mounted at 5'-0" above finish grade. However, the signage was mounted at 7'-0" above finish grade due to a stipulation in the Manual of Uniform Traffic Control Devices, which allows for signage in the public way to be mounted at 7'-0", to avoid injury to pedestrians. (see enclosures)

If you have any concerns or questions regarding this, please fell free to contact us.

Sincerely,

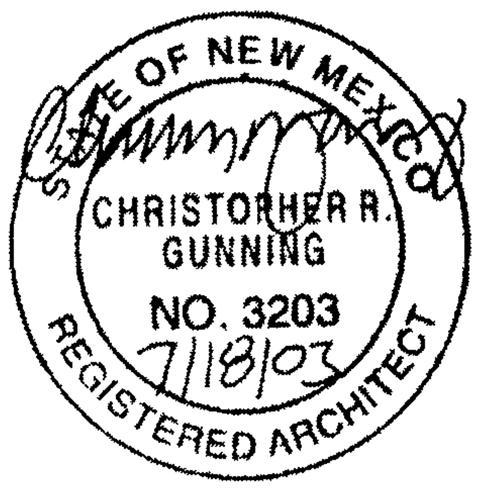

Christopher R. Gunning, AIA
Principal
Dekker/Perich/Sabatini

S \02057 NMEAF\General\Correspondence\L-TCLcert 2003-7-18 doc

Dekker/Perich/Sabatini
architecture
interiors
planning
engineering

Cc: Jack Westman, Heart Office LLC
Marty Hibbs, BradburyStamm Construction
Bob Golden, BradburyStamm Construction
file

Enclosures

City of Albuquerque
P.O. BOX 1293 ALBUQUERQUE, NEW MEXICO 87103

August 27, 2003

Bruce Stidworthy, PE
Bohannan Huston, Inc.
7500 Jefferson NE- Courtyard 1
Albuquerque, NM 87109

RE: HEART INSTITUTE MEDICAL OFFICE BUILDING (K-15/D6F)
(502 ELM ST NE)
ENGINEER'S CERTIFICATION FOR CERTIFICATE OF OCCUPANCY
ENGINEER'S STAMP DATED 7/23/2002
ENGINEER'S CERTIFICATION DATED 6/30/2003

Dear Mr. Stidworthy:

Based upon the information provided in your Engineer's Certification submittal dated 8/27/2003, the above referenced site is approved for a Permanent Certificate of Occupancy.

If you have any questions please call me at 924-3982.

Sincerely,

Bradley L. Bingham, PE
Sr. Engineer, Planning Dept.
Development and Building Services

C: Certificate of Occupancy Clerk, COA
drainage file
approval file

6-13-03

ED, HERE IS YOUR PERMIT FOR THE DRAIN. GW

MAT KLINE, 250-2640, CITY SO-19 INSPECTOR,

HAVE HIM GIVE "FINAL APPROVAL" ON THIS SHEET. I

WILL TAKE THIS APPROVAL TO TERRI MARTIN FOR

ADDITIONAL "HYDROLOGY" APPROVAL. THANK YOU, Bob Holden 681-6724

approved

Glenn Jo

CITY OF ALBUQUERQUE
PERMIT FOR EXCAVATION, CONSTRUCTION AND BARRICADING

CONTRACTOR LICENSE ADDRESS

BRADBURY & STAMM INC

GF92
P.O. BOX 10850
ALBUQUERQUE, NM 87184-0850
765-1237

SITE

502 ELM ST NE

PERMIT AND DETOUR PLAN COMMENTS

SO #19, LETTER ON FILE DATED 8/8/02

PERMIT NUMBER	[illegible]
PROJECT NUMBER	
PERMIT ISSUE DATE	05/13/2003
BARRICADED BY	
BLUE STAKE	
PAVING BY	CDH
EXCAVATION 443008-5810000	42.00 EX
SIDEWALK 443012-5810000	0.00 SW
DRIVEPAD 443011-5810000	0.00 DP
CURB/GUTTER 443010-5810000	0.00 CG
BARRICADING 443009-5810000	25.00 BR
RESTORATION 443017-5810000	0.00 RS
TOTAL FEE	67.00

START DATE	COMPLETION DATE	PERMIT EXPIRES	INSURANCE EXPIRES	BOND EXPIRES	ZONE ATLAS
05/13/2003	05/23/2003	05/23/2003	05/01/2003	12/31/2007	

6-3-03

APPLICANT

ISSUED BY

VOID UNTIL VALIDATED BY CITY TREASURER

PERMITTEE AGREES TO ASSUME ALL LIABILITY, INCLUDING INDEMNIFYING, DEFENDING AND HOLDING THE CITY HARMLESS FOR ALL DAMAGES OR INJURY TO PERSONS OR PROPERTY RESULTING FROM PERMITTEE'S EXCAVATION AND/OR BARRICADE WORK. THIS PERMIT IS GRANTED IN CONSIDERATION OF PERMITTEE'S ASSUMING SAID LIABILITY AND IS APPROVED FOR THE WORK DESCRIBED ABOVE IN ACCORDANCE WITH SECTION 6-5-2-1 ET SEQ. R.O. (1994), PERMITTEE AGREES TO COMPLY WITH ALL APPLICABLE CITY RULES, REGULATIONS AND ORDINANCES AND WHEN EXCAVATING, TO PATCH OR PLATE PRIOR TO OPENING TO TRAFFIC IN ACCORDANCE WITH APPLICABLE RULES, REGULATIONS AND ORDINANCES. PLEASE CALL 924-3400 FOR ADDITIONAL INFORMATION.

CAUTION: PROTECT UNDERGROUND UTILITIES CALL 260-1990, 48 HOURS IN ADVANCE FOR LINE STAKING

PWD 003 REV 04/03

City of Albuquerque
ALBUQUERQUE, NEW MEXICO 87103

Permit pulled on 5/13/03 20686716 By Bradburg/Stamp

August 8, 2002

Bruce Stidworthy, PE
Bohannan Huston, Inc.
7500 Jefferson NE
Albuquerque, NM 87109

Re: St. Joseph Heart Institute Grading and Drainage Plan
Engineer's Stamp dated 7-23-02 (K15/D6F)

Dear Mr. Stidworthy,

Based upon the information provided in your submittal dated 7-26-02, the above referenced plan is approved for Building Permit and SO#19 Permit. Please attach a copy of this approved plan to the construction sets prior to sign-off by Hydrology.

A separate permit (SO19) is required for construction within City R/W. A copy of this approval letter must be on hand when applying for the excavation permit.

Also, prior to Certificate of Occupancy release, Engineer Certification per the DPM checklist will be required.

If you have any questions, you can contact me at 924-3986.

Sincerely,

Bradley L. Bingham

Bradley L. Bingham, PE
Sr. Engineer, Planning Dept.
Development and Building Services

C: file

City of Albuquerque
P.O. BOX 1293 ALBUQUERQUE, NEW MEXICO 87103

July 8, 2003

Bruce Stidworthy, P.E.
Bohannan Huston, Inc.
7500 Jefferson NE
Albuquerque, New Mexico 87109

RE: HEART INSTITUTE MEDICAL OFFICE BUILDING (K-15/D6F)
(502 Elm St NE)
ENGINEERS CERTIFICATION FOR CERTIFICATE OF OCCUPANCY
ENGINEERS STAMP DATED 7/23/2002
ENGINEERS CERTIFICATION DATED 6/30/2003

Dear Bruce:

We are in receipt of your Engineers Certification submittal dated 6/30/2003 for the above referenced site; However, a Certificate of Occupancy from City Hydrology **can not** be issued at this time.

- Per the City's Permit Section, it has been verified that the contractor has *not* obtained the permit for the SO19. This permit, as well as having the City's storm drainage inspector's approval signature, needs to be submitted with the Engineers Certification prior to the approval of a Certificate of Occupancy, as per the Design Process Manual (DPM) Chapter 17 "Private Storm Drain Facilities within a City Right-of-Way and/or Easement"

When the above issue has been addressed, we will revisit the issue of granting a permanent Certificate of Occupancy.

If you have any questions, please feel free to contact me at 924-3981.

Sincerely,

Teresa A. Martin
Hydrology Plan Checker
Development & Bldg. Services Division
BLD

c: File

DRAINAGE AND TRANSPORTATION INFORMATION SHEET
(REV. 1/11/2002)

PROJECT TITLE: Heart Institute Medical Office Building ZONE MAP/DRG. FILE # K-15/D6F

DRB #: 1001718 EPC#: 02EPC140 / 02EPC141 WORK ORDER#:

LEGAL DESCRIPTION: Tract 2B, St. Joseph Hospital Complex
CITY ADDRESS: Elm Street north of Martin Luther King Boulevard

ENGINEERING FIRM: Bohannan Huston, Inc. CONTACT: Bruce Stidworthy
ADDRESS: 7500 Jefferson NE – Courtyard I PHONE: (505) 823-1000
CITY, STATE: Albuquerque, NM ZIP CODE: 87109

OWNER: CONTACT:
ADDRESS: PHONE:
CITY, STATE: ZIP CODE:

ARCHITECT: Dekker/Perich/Sabatini CONTACT: Curtis Proctor
ADDRESS: 6801 Jefferson NE – Suite 100 PHONE:
CITY, STATE: Albuquerque, NM ZIP CODE: 87109

SURVEYOR: CONTACT:
ADDRESS: PHONE:
CITY, STATE: ZIP CODE:

CONTRACTOR: CONTACT:
ADDRESS: PHONE:
CITY, STATE: ZIP CODE:

CHECK TYPE OF SUBMITTAL:

- ____ DRAINAGE REPORT
- ____ DRAINAGE PLAN
- ____ CONCEPTUAL GRADING & DRAINAGE PLAN
- ____ GRADING PLAN (2 copies w/corrected Engineer's Stamp date)
- ____ EROSION CONTROL PLAN
- X ENGINEER'S CERTIFICATION (HYDROLOGY)
- ____ CLOMR/LOMR
- ____ TRAFFIC CIRCULATION LAYOUT (TCL)
- ____ ENGINEERS CERTIFICATION (TCL)
- ____ ENGINEERS CERTIFICATION (DRB APPR. SITE PLAN)
- ____ OTHER

CHECK TYPE OF APPROVAL SOUGHT:

- ____ SIA / FINANCIAL GUARANTEE RELEASE
- ____ PRELIMINARY PLAT APPROVAL
- ____ S. DEV. PLAN FOR SUB'D. APPROVAL
- ____ S. DEV. PLAN FOR BLDG. PERMIT APPROVAL
- ____ SECTOR PLAN APPROVAL
- ____ FINAL PLAT APPROVAL
- ____ FOUNDATION PERMIT APPROVAL
- ____ BUILDING PERMIT APPROVAL
- X CERTIFICATE OF OCCUPANCY (PERM.)
- ____ CERTIFICATE OF OCCUPANCY (TEMP.)
- ____ GRADING PERMIT APPROVAL
- ____ PAVING PERMIT APPROVAL
- ____ WORK ORDER APPROVAL
- ____ OTHER (S.O. 19)

WAS A PRE-DESIGN CONFERENCE ATTENDED:

- ____ YES
- ____ NO
- ____ COPY PROVIDED

RECEIVED
JUN 30 2003
HYDROLOGY SECTION

DATE SUBMITTED: June 30, 2003 BY: BHI, Bruce Stidworthy

Requests for approvals of Site Development Plans and/or Subdivision Plats shall be accompanied by a drainage submittal. The particular nature , location and scope of the proposed development defines the degree of drainage detail. One or more of the following levels of submittal may be required based on the following:

1. **Conceptual Grading and Drainage Plan:** Required for approval of Site Development Plans greater than five (5) acres and Sector Plans.
2. **Drainage Plans:** Required for building permits, grading permits, paving permits and site plans less than five (5) acres.
3. **Drainage Report:** Required for subdivisions containing more than ten (10) lots or constituting five (5) acres or more.

Bohannan ▲ Huston INC.

Courtyard I
7500 Jefferson St. NE
Albuquerque, NM
87109-4335
www.bhinc.com
voice: 505.823.1000
facsimile: 505.798.7988
toll free: 800.877.5332

CLIENT/COURIER TRANSMITTAL

To: Brad Bingham, P.E.
City of Albuquerque
Planning/Hydrology Dev Section
600 Second St NW – 2nd Floor

phone: 924-3986

Requested By: Bruce Stidworthy / am

Date: June 30, 2003

Time Due: ☒ **This A.M.** ☐ **This P.M.**
☐ **Rush ___** ☐ **Tomorrow**

Job No.: 02 0227

Job Name: Heart Institute Medical Office Building

DELIVERY VIA

☒ **Courier** ☐ **Federal Express**
☐ **Mail** ☐ **UPS**
☐ **Other** _____

PICK UP

Item: _____
_____

ITEM NO.	QUANTITY	DESCRIPTION
1	1	Drainage Information Sheet.
2	1	Heart Institute Medical Office Building Grading Certification.

COMMENTS / INSTRUCTIONS

RECEIVED
JUN 3 0 2003
HYDROLOGY SECTION

ENGINEERING ▲
SPATIAL DATA ▲
ADVANCED TECHNOLOGIES ▲

REC'D BY: _____ ***DATE:*** _____ ***TIME:*** _____

City of Albuquerque
P.O. BOX 1293 ALBUQUERQUE, NEW MEXICO 87103

August 8, 2002

Bruce Stidworthy, PE
Bohannan Huston, Inc.
7500 Jefferson NE
Albuquerque, NM 87109

Re: St. Joseph Heart Institute Grading and Drainage Plan
Engineer's Stamp dated 7-23-02 (K15/D6F)

Dear Mr. Stidworthy,

Based upon the information provided in your submittal dated 7-26-02, the above referenced plan is approved for Building Permit and SO#19 Permit. Please attach a copy of this approved plan to the construction sets prior to sign-off by Hydrology.

A separate permit (SO19) is required for construction within City R/W. A copy of this approval letter must be on hand when applying for the excavation permit.

Also, prior to Certificate of Occupancy release, Engineer Certification per the DPM checklist will be required.

If you have any questions, you can contact me at 924-3986.

Sincerely,

Bradley L. Bingham

Bradley L. Bingham, PE
Sr. Engineer, Planning Dept.
Development and Building Services

C: file

THE CITY OF ALBUQUERQUE IS AN EQUAL OPPORTUNITY/REASONABLE ACCOMMODATION EMPLOYER

DRAINAGE AND TRANSPORTATION INFORMATION SHEET
(REV. 1/11/2002)

PROJECT TITLE: Heart Institute Medical Office Building ZONE MAP/DRG. FILE # K-15/D6F

DRB #: 1001718 EPC#: 02EPC140 / 02EPC141 WORK ORDER#:

LEGAL DESCRIPTION: Tract 2B, St. Joseph Hospital Complex
CITY ADDRESS: Elm Street north of Martin Luther King Boulevard

ENGINEERING FIRM: Bohannan Huston, Inc. CONTACT: Bruce Stidworthy
ADDRESS: 7500 Jefferson NE – Courtyard I PHONE: (505) 823-1000
CITY, STATE: Albuquerque, NM ZIP CODE: 87109

OWNER: CONTACT:
ADDRESS: PHONE:
CITY, STATE: ZIP CODE:

ARCHITECT: Dekker/Perich/Sabatini CONTACT: Curtis Proctor
ADDRESS: 6801 Jefferson NE – Suite 100 PHONE:
CITY, STATE: Albuquerque, NM ZIP CODE: 87109

SURVEYOR: CONTACT:
ADDRESS: PHONE:
CITY, STATE: ZIP CODE:

CONTRACTOR: CONTACT:
ADDRESS: PHONE:
CITY, STATE: ZIP CODE:

CHECK TYPE OF SUBMITTAL:
- ____ DRAINAGE REPORT
- X DRAINAGE PLAN
- ____ CONCEPTUAL GRADING & DRAINAGE PLAN
- X GRADING PLAN
- ____ EROSION CONTROL PLAN
- ____ ENGINEER'S CERTIFICATION (HYDROLOGY)
- ____ CLOMR/LOMR
- ____ TRAFFIC CIRCULATION LAYOUT (TCL)
- ____ ENGINEERS CERTIFICATION (TCL)
- ____ ENGINEERS CERTIFICATION (DRB APPR. SITE PLAN)
- ____ OTHER

CHECK TYPE OF APPROVAL SOUGHT:
- ____ SIA / FINANCIAL GUARANTEE RELEASE
- ____ PRELIMINARY PLAT APPROVAL
- ____ S. DEV. PLAN FOR SUB'D. APPROVAL
- ____ S. DEV. PLAN FOR BLDG. PERMIT APPROVAL
- ____ SECTOR PLAN APPROVAL
- ____ FINAL PLAT APPROVAL
- ____ FOUNDATION PERMIT APPROVAL
- X BUILDING PERMIT APPROVAL
- ____ CERTIFICATE OF OCCUPANCY (PERM.)
- ____ CERTIFICATE OF OCCUPANCY (TEMP.)
- X GRADING PERMIT APPROVAL
- ____ PAVING PERMIT APPROVAL
- ____ WORK ORDER APPROVAL
- X OTHER (S.O. 19)

WAS A PRE-DESIGN CONFERENCE ATTENDED:
- ____ YES
- ____ NO
- ____ COPY PROVIDED

RECEIVED
JUL 26 2002
HYDROLOGY SECTION

DATE SUBMITTED: July 26, 2002 BY: BHI, Bruce Stidworthy

Requests for approvals of Site Development Plans and/or Subdivision Plats shall be accompanied by a drainage submittal. The particular nature , location and scope of the proposed development defines the degree of drainage detail. One or more of the following levels of submittal may be required based on the following:

1. **Conceptual Grading and Drainage Plan:** Required for approval of Site Development Plans greater than five (5) acres and Sector Plans.
2. **Drainage Plans:** Required for building permits, grading permits, paving permits and site plans less than five (5) acres.
3. **Drainage Report:** Required for subdivisions containing more than ten (10) lots or constituting five (5) acres or more.

Bohannan ▲ Huston INC.

Courtyard I
7500 Jefferson St. NE
Albuquerque, NM
87109-4335
www.bhinc.com
voice: 505.823.1000
facsimile: 505.798.7988
toll free: 800.877.5332

CLIENT/COURIER TRANSMITTAL

To: Carlos Montoya
City of Albuquerque/Hydrology
600 2nd Street NW - 2nd Floor

phone: 924-3982

Requested By: Bruce Stidworthy / am

Date: July 26, 2002

Time Due: ☐ This A.M. ☒ This P.M.
☐ Rush ____ ☐ By Tomorrow

Job No.: 02 0227

Job Name: Heart Institute Medical Office Building

DELIVERY VIA

☒ Courier ☐ Federal Express
☐ Mail ☐ UPS
☐ Other _____

PICK UP

Item: _____

_____

ITEM NO.	QUANTITY	DESCRIPTION
1	1	Letter dated 7/26/02 re: Heart Institute Medical Office Building, Tract 2B, St. Joseph Hospital Medical Complex.

COMMENTS / INSTRUCTIONS

ENGINEERING
SPATIAL DATA
ADVANCED TECHNOLOGIES

*REC'D BY:*_____ *DATE:*_____ *TIME:*_____

Bohannan ^ Huston INC.

Courtyard I
7500 Jefferson St. NE
Albuquerque, NM
87109-4335

www.bhinc.com

voice: 505 823.1000
facsimile: 505.798.7988
toll free: 800.877.5332

July 26, 2002

Carlos Montoya, P.E.
City of Albuquerque – Hydrology
P. O. Box 1293
Albuquerque, NM 87103

Re: Heart Institute Medical Office Building, Tract 2B, St. Joseph Hospital Medical Complex

Dear Carlos:

Enclosed for your review are the Grading and Drainage Plan, Basin Map & Final Drainage Management Plan, and the Drainage Information Sheet for the referenced project. Also enclosed for your information is the proposed replat (which has already been approved by hydrology). This grading and drainage plan submittal is for building permit and S.O. 19 approval.

If you have any questions regarding this submittal, please call me at 823-1000.

Sincerely,
Bohannan Huston, Inc.

Bruce Stidworthy, P.E.
Community Development and Planning Group

BS/am
Enclosures

P \020227\cdp\corres\Bldg Permit Hydrology Submittal doc

Bohannan ▲ Huston INC.

Courtyard I
7500 Jefferson St. NE
Albuquerque, NM
87109-4335
www.bhinc.com
voice: 505.823.1000
facsimile: 505.798.7988
toll free: 800.877.5332

CLIENT/COURIER TRANSMITTAL

To: Brad Bingham
COA Hydrology/Utility Dev
Development & Bldg Svcs
600 2nd Street NW-2nd Floor

phone: 924-3986

Requested By: Bruce Stidworthy / am

Date: August 9, 2002

Time Due: ☐ **This A.M.** ☒ **This P.M.**
☐ **Rush ___** ☐ **By Tomorrow**

Job No.: 02 0227

Job Name: Heart Institute Medical Office Building

DELIVERY VIA

☒ **Courier** ☐ **Federal Express**
☐ **Mail** ☐ **UPS**
☐ **Other** _____

PICK UP

Item: _____

_____

ITEM NO.	QUANTITY	DESCRIPTION
1	2 copies	Grading Plan.
2	2 copies	Drainage Information Sheet (w/corrected Engineer's Stamp date)

COMMENTS / INSTRUCTIONS

RECEIVED
AUG 09 2002
HYDROLOGY SECTION

ENGINEERING ▲
SPATIAL DATA ▲
ADVANCED TECHNOLOGIES ▲

REC'D BY: _____ ***DATE:*** _____ ***TIME:*** _____

DRAINAGE AND TRANSPORTATION INFORMATION SHEET
(REV. 1/11/2002)

PROJECT TITLE: Heart Institute Medical Office Building ZONE MAP/DRG. FILE # K-15/D6F

DRB #: 1001718 EPC#: 02EPC140 / 02EPC141 WORK ORDER#:

LEGAL DESCRIPTION: Tract 2B, St. Joseph Hospital Complex
CITY ADDRESS: Elm Street north of Martin Luther King Boulevard

ENGINEERING FIRM: Bohannan Huston, Inc. CONTACT: Bruce Stidworthy
ADDRESS: 7500 Jefferson NE – Courtyard I PHONE: (505) 823-1000
CITY, STATE: Albuquerque, NM ZIP CODE: 87109

OWNER: CONTACT:
ADDRESS: PHONE:
CITY, STATE: ZIP CODE:

ARCHITECT: Dekker/Perich/Sabatini CONTACT: Curtis Proctor
ADDRESS: 6801 Jefferson NE – Suite 100 PHONE:
CITY, STATE: Albuquerque, NM ZIP CODE: 87109

SURVEYOR: CONTACT:
ADDRESS: PHONE:
CITY, STATE: ZIP CODE:

CONTRACTOR: CONTACT:
ADDRESS: PHONE:
CITY, STATE: ZIP CODE:

CHECK TYPE OF SUBMITTAL:
- ____ DRAINAGE REPORT
- ____ DRAINAGE PLAN
- ____ CONCEPTUAL GRADING & DRAINAGE PLAN
- X GRADING PLAN (2 copies w/corrected Engineer's Stamp date)
- ____ EROSION CONTROL PLAN
- ____ ENGINEER'S CERTIFICATION (HYDROLOGY)
- ____ CLOMR/LOMR
- ____ TRAFFIC CIRCULATION LAYOUT (TCL)
- ____ ENGINEERS CERTIFICATION (TCL)
- ____ ENGINEERS CERTIFICATION (DRB APPR. SITE PLAN)
- ____ OTHER

CHECK TYPE OF APPROVAL SOUGHT:
- ____ SIA / FINANCIAL GUARANTEE RELEASE
- ____ PRELIMINARY PLAT APPROVAL
- ____ S. DEV. PLAN FOR SUB'D. APPROVAL
- ____ S. DEV. PLAN FOR BLDG. PERMIT APPROVAL
- ____ SECTOR PLAN APPROVAL
- ____ FINAL PLAT APPROVAL
- ____ FOUNDATION PERMIT APPROVAL
- X BUILDING PERMIT APPROVAL
- ____ CERTIFICATE OF OCCUPANCY (PERM.)
- ____ CERTIFICATE OF OCCUPANCY (TEMP.)
- X GRADING PERMIT APPROVAL
- ____ PAVING PERMIT APPROVAL
- ____ WORK ORDER APPROVAL
- X OTHER (S.O. 19)

WAS A PRE-DESIGN CONFERENCE ATTENDED:
- ____ YES
- ____ NO
- ____ COPY PROVIDED

RECEIVED
AUG 09 2002
HYDROLOGY SECTION

DATE SUBMITTED: August 9, 2002 BY: BHI, Bruce Stidworthy

Requests for approvals of Site Development Plans and/or Subdivision Plats shall be accompanied by a drainage submittal. The particular nature , location and scope of the proposed development defines the degree of drainage detail. One or more of the following levels of submittal may be required based on the following:

1. **Conceptual Grading and Drainage Plan:** Required for approval of Site Development Plans greater than five (5) acres and Sector Plans.
2. **Drainage Plans:** Required for building permits, grading permits, paving permits and site plans less than five (5) acres.
3. **Drainage Report:** Required for subdivisions containing more than ten (10) lots or constituting five (5) acres or more.

DRAINAGE AND TRANSPORTATION INFORMATION SHEET
(REV. 1/11/2002)

PROJECT TITLE: Heart Institute Medical Office Building ZONE MAP/DRG. FILE # K-15/D6F

DRB #: 1001718 EPC#: 02EPC140 / 02EPC141 WORK ORDER#:

LEGAL DESCRIPTION: Tract 2B, St. Joseph Hospital Complex
CITY ADDRESS: Elm Street north of Martin Luther King Boulevard

ENGINEERING FIRM: Bohannan Huston, Inc. CONTACT: Bruce Stidworthy
ADDRESS: 7500 Jefferson NE – Courtyard I PHONE: (505) 823-1000
CITY, STATE: Albuquerque, NM ZIP CODE: 87109

OWNER: CONTACT:
ADDRESS: PHONE:
CITY, STATE: ZIP CODE:

ARCHITECT: Dekker/Perich/Sabatini CONTACT: Curtis Proctor
ADDRESS: 6801 Jefferson NE – Suite 100 PHONE:
CITY, STATE: Albuquerque, NM ZIP CODE: 87109

SURVEYOR: CONTACT:
ADDRESS: PHONE:
CITY, STATE: ZIP CODE:

CONTRACTOR: CONTACT:
ADDRESS: PHONE:
CITY, STATE: ZIP CODE:

CHECK TYPE OF SUBMITTAL:

- ____ DRAINAGE REPORT
- ____ DRAINAGE PLAN
- ____ CONCEPTUAL GRADING & DRAINAGE PLAN
- X GRADING PLAN (2 copies w/corrected Engineer's Stamp date)
- ____ EROSION CONTROL PLAN
- ____ ENGINEER'S CERTIFICATION (HYDROLOGY)
- ____ CLOMR/LOMR
- ____ TRAFFIC CIRCULATION LAYOUT (TCL)
- ____ ENGINEERS CERTIFICATION (TCL)
- ____ ENGINEERS CERTIFICATION (DRB APPR. SITE PLAN)
- ____ OTHER

CHECK TYPE OF APPROVAL SOUGHT:

- ____ SIA / FINANCIAL GUARANTEE RELEASE
- ____ PRELIMINARY PLAT APPROVAL
- ____ S. DEV. PLAN FOR SUB'D. APPROVAL
- ____ S. DEV. PLAN FOR BLDG. PERMIT APPROVAL
- ____ SECTOR PLAN APPROVAL
- ____ FINAL PLAT APPROVAL
- ____ FOUNDATION PERMIT APPROVAL
- X BUILDING PERMIT APPROVAL
- ____ CERTIFICATE OF OCCUPANCY (PERM.)
- ____ CERTIFICATE OF OCCUPANCY (TEMP.)
- X GRADING PERMIT APPROVAL
- ____ PAVING PERMIT APPROVAL
- ____ WORK ORDER APPROVAL
- X OTHER (S.O. 19)

WAS A PRE-DESIGN CONFERENCE ATTENDED:

- ____ YES
- ____ NO
- ____ COPY PROVIDED

RECEIVED
AUG 09 2002
HYDROLOGY SECTION

DATE SUBMITTED: August 9, 2002 BY: BHI, Bruce Stidworthy

Requests for approvals of Site Development Plans and/or Subdivision Plats shall be accompanied by a drainage submittal. The particular nature , location and scope of the proposed development defines the degree of drainage detail. One or more of the following levels of submittal may be required based on the following:

1. **Conceptual Grading and Drainage Plan:** Required for approval of Site Development Plans greater than five (5) acres and Sector Plans.
2. **Drainage Plans:** Required for building permits, grading permits, paving permits and site plans less than five (5) acres.
3. **Drainage Report:** Required for subdivisions containing more than ten (10) lots or constituting five (5) acres or more.

City of Albuquerque
P.O. BOX 1293 ALBUQUERQUE, NEW MEXICO 87103

April 12, 2002

Glenn Broughton, PE
Bohannan Huston, Inc.
7500 Jefferson NE-Courtyard I
Albuquerque, NM 87109

Re: Heart Institute Medical Office Building Conceptual Grading and Drainage Plan Engineer's Stamp Dated 4-12-02, (K15/D6F)

Dear Mr. Broughton,

Based on the information contained in your submittal dated 4-09-02, the above referenced plan is approved for Site Plan for Building Permit Action by the DRB.

If you have any questions, you can contact me at 924-3982.

Sincerely,

Carlos A. Montoya, PE
City Floodplain Administrator, PWD
Development and Building Services

C: Terri Martin, Hydrology
File (2)

THE CITY OF ALBUQUERQUE IS AN EQUAL OPPORTUNITY/REASONABLE ACCOMMODATION EMPLOYER

April 12, 2002

BOHANNAN-HUSTON, INC

Courtyard One

7500 JEFFERSON NE

Albuquerque

NM 87109-4335

voice 505 823 1000

fax 505 798 7988

Carlos Montoya, P.E.
City of Albuquerque – Hydrology
P. O. Box 1293
Albuquerque, NM 87103

Re: Heart Institute Medical Office Building, Tract 2B, St. Joseph Hospital Medical Complex

Dear Carlos:

Enclosed for your review are the Drainage Information Sheet, revised Conceptual Grading and Drainage Plan, and recorded plat for the referenced project. This grading and drainage plan submittal is in support of the site development plan for building permit approval.

The project is located within the St. Joseph Hospital Medical Complex on the east side of Elm Street one block north of Martin Luther King Boulevard. The total area of the site is approximately 2.33 acres and has been analyzed as a single drainage basin. The site is currently paved, with some landscape areas. Under existing conditions, the site drains westerly and free discharges 10.6cfs to Elm Street. Proposed development conditions will not increase overall discharge from this site. There is some offsite flow that enters the site from the east. This flow is approximately 1.6cfs for a 100-year storm. See the attached grading and drainage form for calculations.

As shown on the plat for Tracts 1A, 2A, 2B and 2C, St. Joseph Hospital complex, there are no public easements or public infrastructure improvements crossing the site. There are public utility easements parallel and adjacent to Elm Street, and private access easements that cross the site.

If you have any questions regarding this submittal, please call me at 823-1000.

Sincerely,
Bohannan Huston, Inc.

Glenn Broughton, P.E.
Community Development and Planning Group

GB/am
Enclosures

P \020227\cdp\corres\DRB Hydrology Submittal doc

DRAINAGE AND TRANSPORTATION INFORMATION SHEET

(REV. 1/11/2002)

K-15/D6F

PROJECT TITLE: Heart Institute Medical office BLD ZONE MAP/DRG. FILE #: K-15-Z
DRB #: 1001718 EPC#: 02EPC140/02EPC141 WORK ORDER#:

LEGAL DESCRIPTION: Tract B St. Joseph Hospital Complex
CITY ADDRESS:

ENGINEERING FIRM: Bohannan Huston
ADDRESS: 7500 Jefferson NE · Court yard I
CITY, STATE: Alb, NM 87109
CONTACT: Glenn Broughton
PHONE: 823-1000
ZIP CODE: 87109

OWNER:
ADDRESS:
CITY, STATE:
CONTACT:
PHONE:
ZIP CODE:

ARCHITECT: DeKisar\Perich\Sabatini
ADDRESS: 6901 Jeffson NE
CITY, STATE: Alb, NM
CONTACT: Tim Gratten
PHONE: 761-9700
ZIP CODE: 97109

SURVEYOR:
ADDRESS
CITY, STATE:
CONTACT:
PHONE:
ZIP CODE:

CONTRACTOR:
ADDRESS:
CITY, STATE:
CONTACT:
PHONE:
ZIP CODE:

CHECK TYPE OF SUBMITTAL:

____ DRAINAGE REPORT
____ DRAINAGE PLAN
X CONCEPTUAL GRADING & DRAINAGE PLAN
____ GRADING PLAN
____ EROSION CONTROL PLAN
____ ENGINEER'S CERTIFICATION (HYDROLOGY)
____ CLOMR/LOMR
____ TRAFFIC CIRCULATION LAYOUT (TCL)
____ ENGINEERS CERTIFICATION (TCL)
____ ENGINEERS CERTIFICATION (DRB APPR. SITE PLAN)
____ OTHER

CHECK TYPE OF APPROVAL SOUGHT:

____ SIA / FINANCIAL GUARANTEE RELEASE
____ PRELIMINARY PLAT APPROVAL
____ S. DEV. PLAN FOR SUB'D. APPROVAL
X S. DEV. PLAN FOR BLDG. PERMIT APPROVAL
____ SECTOR PLAN APPROVAL
____ FINAL PLAT APPROVAL
____ FOUNDATION PERMIT APPROVAL
____ BUILDING PERMIT APPROVAL
____ CERTIFICATE OF OCCUPANCY (PERM.)
____ CERTIFICATE OF OCCUPANCY (TEMP.)
____ GRADING PERMIT APPROVAL
____ PAVING PERMIT APPROVAL
____ WORK ORDER APPROVAL
____ OTHER (SPECIFY)

WAS A PRE-DESIGN CONFERENCE ATTENDED:

____ YES
____ NO
____ COPY PROVIDED

RECEIVED
APR 09 2002
HYDROLOGY SECTION

DATE SUBMITTED: April 09, 2002 BY: Glenn Broughton

Requests for approvals of Site Development Plans and/or Subdivision Plats shall be accompanied by a drainage submittal. The particular nature , location and scope ot the proposed development defines the degree of drainage detail. One or more of the following levels of submittal may be required based on the following:

1. **Conceptual Grading and Drainage Plan**: Required for approval of Site Development Plans greater than five
2. **Drainage Plans**: Required for building permits, grading permits, paving permits and site plans less than five (5)
3. **Drainage Report**: Required for subdivisions containing more than ten (10) lots or constituting five (5) acres or more.

DRAINAGE AND TRANSPORTATION INFORMATION SHEET
(REV. 1/11/2002)

PROJECT TITLE: Heart Institute Medical Office Building ZONE MAP/DRG. FILE # K-15-Z
DRB #: 1001718 EPC#: 02EPC140 / 02EPC141 WORK ORDER#:

LEGAL DESCRIPTION: Tract 2B, St. Joseph Hospital Complex
CITY ADDRESS: Elm Street north of Martin Luther King Boulevard

ENGINEERING FIRM: Bohannan Huston, Inc. CONTACT: Glenn Broughton
ADDRESS: 7500 Jefferson NE – Courtyard I PHONE: (505) 823-1000
CITY, STATE: Albuquerque, NM ZIP CODE: 87109

OWNER: CONTACT:
ADDRESS: PHONE:
CITY, STATE: ZIP CODE:

ARCHITECT: Dekker/Perich/Sabatini CONTACT: Tim Grattan
ADDRESS: 6801 Jefferson NE – Suite 100 PHONE:
CITY, STATE: Albuquerque, NM ZIP CODE: 87109

SURVEYOR: CONTACT:
ADDRESS: PHONE:
CITY, STATE: ZIP CODE:

CONTRACTOR: CONTACT:
ADDRESS: PHONE:
CITY, STATE: ZIP CODE:

CHECK TYPE OF SUBMITTAL:
- ____ DRAINAGE REPORT
- ____ DRAINAGE PLAN
- X CONCEPTUAL GRADING & DRAINAGE PLAN
- ____ GRADING PLAN
- ____ EROSION CONTROL PLAN
- ____ ENGINEER'S CERTIFICATION (HYDROLOGY)
- ____ CLOMR/LOMR
- ____ TRAFFIC CIRCULATION LAYOUT (TCL)
- ____ ENGINEERS CERTIFICATION (TCL)
- ____ ENGINEERS CERTIFICATION (DRB APPR. SITE PLAN)
- ____ OTHER

CHECK TYPE OF APPROVAL SOUGHT:
- ____ SIA / FINANCIAL GUARANTEE RELEASE
- ____ PRELIMINARY PLAT APPROVAL
- ____ S. DEV. PLAN FOR SUB'D. APPROVAL
- X S. DEV. PLAN FOR BLDG. PERMIT APPROVAL
- ____ SECTOR PLAN APPROVAL
- ____ FINAL PLAT APPROVAL
- ____ FOUNDATION PERMIT APPROVAL
- ____ BUILDING PERMIT APPROVAL
- ____ CERTIFICATE OF OCCUPANCY (PERM.)
- ____ CERTIFICATE OF OCCUPANCY (TEMP.)
- ____ GRADING PERMIT APPROVAL
- ____ PAVING PERMIT APPROVAL
- ____ WORK ORDER APPROVAL
- ____ OTHER (SPECIFY)

WAS A PRE-DESIGN CONFERENCE ATTENDED:
- ____ YES
- ____ NO
- ____ COPY PROVIDED

DATE SUBMITTED: April 12, 2002 BY: Glenn S. Broughton, P.E.

Requests for approvals of Site Development Plans and/or Subdivision Plats shall be accompanied by a drainage submittal. The particular nature , location and scope of the proposed development defines the degree of drainage detail. One or more of the following levels of submittal may be required based on the following:

1. **Conceptual Grading and Drainage Plan:** Required for approval of Site Development Plans greater than five (5) acres and Sector Plans.
2. **Drainage Plans:** Required for building permits, grading permits, paving permits and site plans less than five (5) acres.
3. **Drainage Report:** Required for subdivisions containing more than ten (10) lots or constituting five (5) acres or more.

CLIENT/COURIER TRANSMITTAL

OHANNAN HUSTON
ourtyard One
500 JEFFERSON NE
.lbuquerque
IEW MEXICO 87109
oice 505.823.1000
ax 505.798.7988

To: Carlos Montoya
City Floodplain Administrator
City of Albuquerque – Hydrology
400 Marquette Ave NW - Room 301

phone: 924-3982

Requested By: Glenn Broughton / am

Date: **April 12, 2002**

Time Due: ☒ This A.M. ☐ This P.M.
☐ Rush ____ ☐ By Tomorrow

Job No.: 02 0227

Job Name: Heart Institute Medical Office Building

DELIVERY VIA

☒ Courier ☐ Federal Express
☐ Mail ☐ UPS
☐ Other _____

PICK UP

Item: _____
_____

ITEM NO.	QUANTITY	DESCRIPTION
1	1	Letter dated 4/12/02 re: Heart Institute Medical Office Building, Tract 2B, St. Joseph Hospital Medical Complex.

COMMENTS / INSTRUCTIONS

REC'D BY: _____ ***DATE:*** _____ ***TIME:*** _____