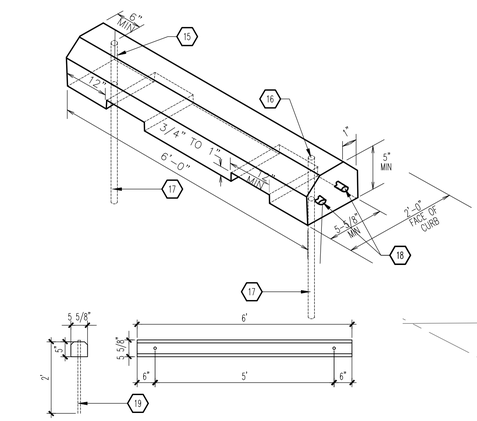

D1 WHEEL STOP
SCALE: 1/2" = 1'-0"

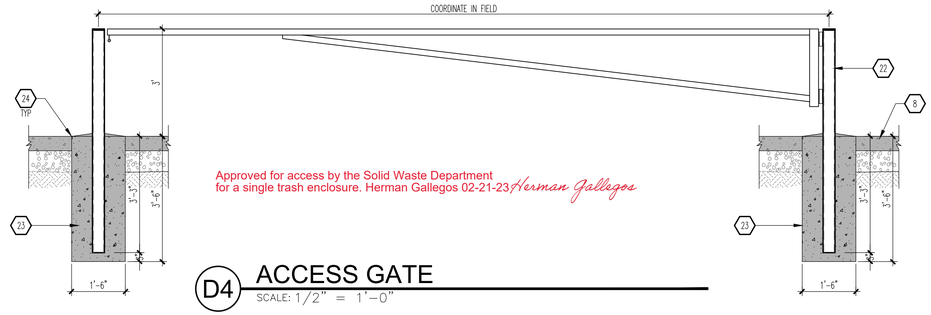

Approved for access by the Solid Waste Department
for a single trash enclosure. Herman Gallegos 02-21-23 Herman Gallegos

D4 ACCESS GATE
SCALE: 1/2" = 1'-0"

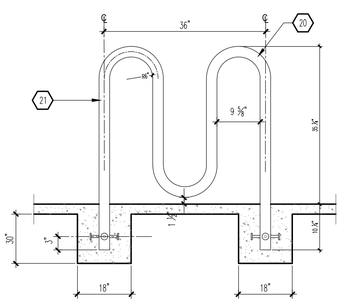

NOTE:
BICYCLE RACK SHALL BE DESIGN ACCORDING TO THE FOLLOWING GUIDELINES:
A. THE RACK SHALL BE MINIMUM 30" TALL AND 18" WIDE.
B. THE BICYCLE FRAME SHALL BE SUPPORTED HORIZONTALLY AT 2 OR MORE PLACES.
C. COMB/TOASTER RACKS ARE NOT ALLOWED.
D. THE RACK SHALL BE DESIGNED TO SUPPORT THE BICYCLE IN AN UPRIGHT POSITION.
E. THE RACK ALLOWS VARYING BICYCLE FRAME SIZES AND STYLES TO BE ATTACHED.
F. THE USER IS NOT REQUIRED TO LIFT THE BICYCLE ONTO THE BICYCLE RACK.
G. EACH BICYCLE PARKING SPACE IS ACCESSIBLE WITHOUT MOVING ANOTHER BICYCLE.

B1 BIKE RACK
SCALE: 1/2" = 1'-0"

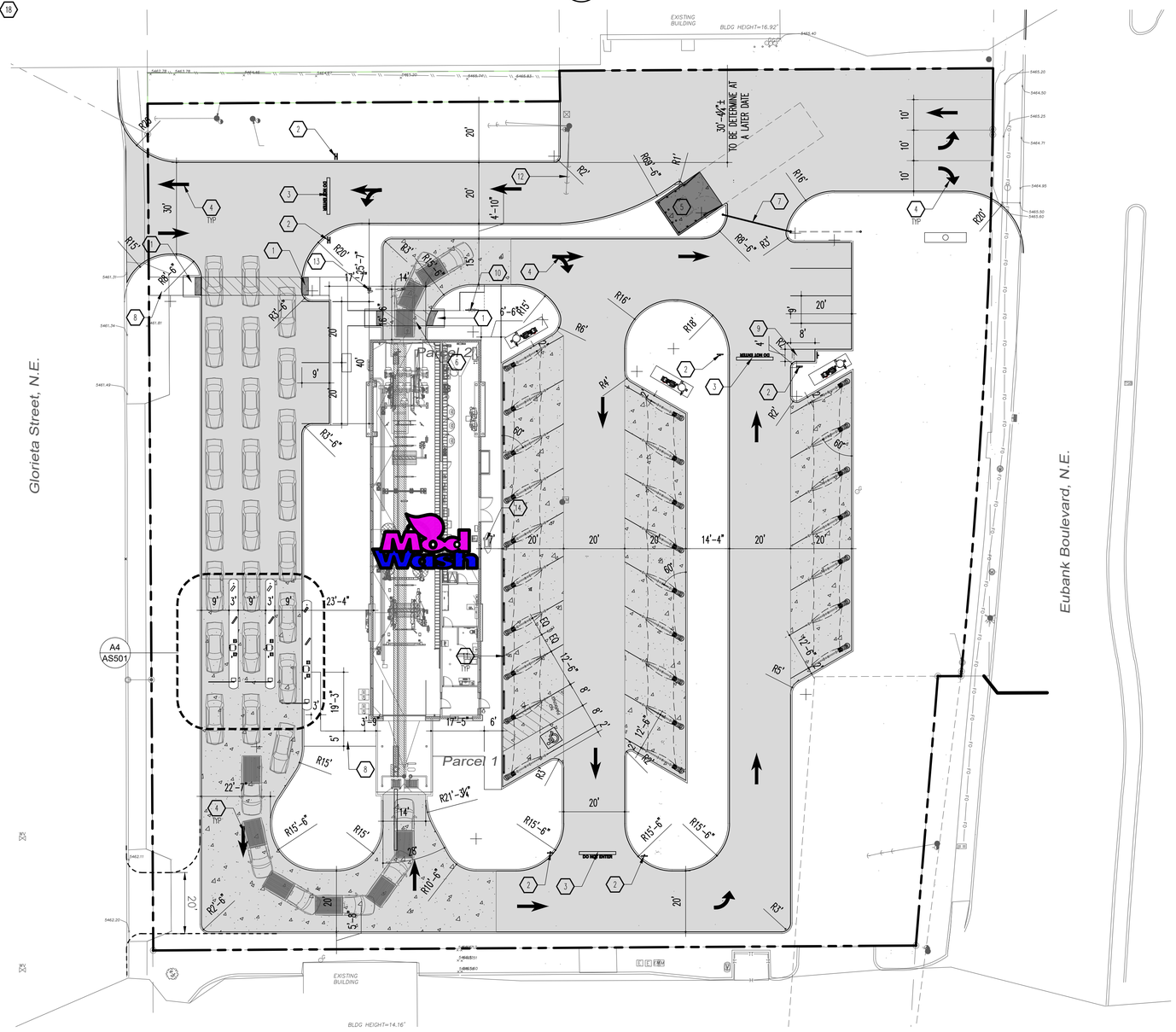

A2 ARCHITECTURE SITE PLAN
SCALE: 1:20

VICINITY MAP
Zone Atlas Map K-20-Z NTS

LEGAL DESCRIPTION:

PARCEL I:

LOT LETTERED G-ONE (G-1) IN BLOCK NUMBERED EIGHT (8), BUENA VENTURA, AS THE SAME IS SHOWN AND DESIGNATED ON THE PLAT THEREOF, FILED IN THE OFFICE OF THE COUNTY CLERK OF BERNAULLO COUNTY, NEW MEXICO ON SEPTEMBER 10, 1991 IN VOLUME 91C, FOLIO 196.

PARCEL II:

TRACT LETTERED "H" IN BLOCK NUMBERED EIGHT (8), BUENA VENTURA, AN ADDITION TO THE CITY OF ALBUQUERQUE, NEW MEXICO, AS THE SAME IS SHOWN AND DESIGNATED ON THE PLAT THEREOF, FILED IN THE OFFICE OF THE COUNTY CLERK OF BERNAULLO COUNTY, NEW MEXICO ON SEPTEMBER 11, 1941 IN VOLUME C1, FOLIO 8,

LESS AND EXCEPTING THEREFROM THAT PORTION OF LOT LETTERED "H" IN BLOCK NUMBERED EIGHT (8) CONVEYED TO THE CITY OF ALBUQUERQUE, NEW MEXICO, A MUNICIPAL CORPORATION BY WARRANTY DEED RECORDED SEPTEMBER 27, 1960 IN BOOK D 564, PAGE 239 AS DOCUMENT NO. 89267, RECORDS OF BERNAULLO COUNTY, NEW MEXICO, AND

LESS AND EXCEPTING THEREFROM THE NORTHERLY TWENTY FEET (N.LY 20') OF TRACT LETTERED "H" IN BLOCK NUMBERED EIGHT (8) CONVEYED TO THE CITY OF ALBUQUERQUE, A MUNICIPAL CORPORATION, BY QUITCLAIM DEED RECORDED NOVEMBER 3, 1954 IN BOOK D 295, PAGE 434 AS DOCUMENT NO. 36394, RECORDS OF BERNAULLO COUNTY, NEW MEXICO.

GENERAL NOTES
A. "G" SERIES SHEETS APPLY TO THE ENTIRE SET OF DRAWINGS.
B. INDICATED DIMENSIONS ARE TO FACE OF FINISH; UNLESS OTHERWISE NOTED.

KEYED NOTES
1. ADA RAMP: SEE C2/AS501.
2. SIGNAGE: "DO NOT ENTER", SEE B1/AS501.
3. PAVEMENT MARKING: "DO NOT ENTER"; SEE C4/AS501.
4. DIRECTIONAL PAVEMENT MARKING.
5. REFUSE ENCLOSURE: SEE A3/AS502.
6. CROSSWALK PAVEMENT MARKING.
7. ACCESS GATE: SEE D4/AS100.
8. CONCRETE SIDEWALK: SEE A2/AS501.
9. MOTORCYCLE PARKING.
10. BIKE RACK: SEE B1/AS100.
11. WHEEL STOP: SEE D1/AS100.
12. EXISTING GUY WIRES TO BE RELOCATED AND COORDINATED WITH CIVIL ENGINEER ON OPTIONS.
13. "STOP-GO" SIGNAGE: CONTRACTOR TO PROVIDE ELECTRICAL POWER. SEE UNDERGROUND CONDUITS PLAN ON SHEET E-104.
14. MAT CLEANER: SEE PLUMBING PLANS.
15. TOP OF REINFORCING BAR FLUSH WITH TOP OF CONCRETE.
16. ⅝" DIAMETER HOLE.
17. ¾" REINFORCING BAR EMBEDDED 24" INTO SUBGRADE.
18. (2) #4 BARS CONTINUOUS.
19. #5 REINFORCING BAR.
20. PRIME AND PAINT STEEL MEMBER FLAT BLACK.
21. 2 ½" STANDARD DUTY PIPE CENTER SUPPORT.
22. GALVANIZED MANUAL SINGLE LEAF SWING BARRIER GATE: SWING SENTINEL #14010-20; OR APPROVED EQUAL.
23. CONCRETE FOOTING.
24. BITUMINOUS JOINT FILLER.

(X) EASEMENTS
A. EXISTING 10' PNM AND QWEST EASEMENT (12/14/2006, A128-7007) TO BE VACATED.
B. EXISTING 9' PUBLIC ROADWAY EASEMENT GRANTED TO THE CITY OF ALBUQUERQUE (11/09/1999, 99C-310).
C. PROPOSED 10' PNM AND QWEST EASEMENT.

GRAPHIC LEGEND
MEDIUM DUTY ASPHALT PAVEMENT: SEE PAVEMENT PLAN ON SHEET C-106.

MEDIUM DUTY CONCRETE PAVEMENT: SEE PAVEMENT PLAN ON SHEET C-106.

PARKING CALCULATION

PARKING SPACES REQUIRED	PARKING SPACES PROVIDED
2 PER 1,000 GSF @1,446 GSF	(4) SPACES
MOTORCYCLE PARKING REQUIRED	
(1) REQUIRED	(1) SPACES
BICYCLE PARKING REQUIRED	
(1) REQUIRED	(3) SPACES

REV	DATE	BY	REVISION
6			
5			
4			
3			
2			
1			

MODULUS ARCHITECTS
100 SUN AVENUE N.E., Ste 600
ALBUQUERQUE, NEW MEXICO 87109
PHONE (505) 338-1499 FAX (505) 338-1498

STATE OF NEW MEXICO
STEPHEN A. DUNBAR
No. 4218
REGISTERED ARCHITECT
27 JAN 2023

PROJECT TITLE
MODWASH
107 & 133 EUBANK BLVD
ALBUQUERQUE, NEW MEXICO 87123

PROJECT MANAGER: DEVIN NGUYEN
JOB NO.: Modwash - Eubank
DRAWN BY: DTN

SHEET TITLE
OVERALL SITE PLAN

DATE: 27 JAN 2023
SCALE: AS NOTED
sheet- AS100
of-