Verbal- NO

City of Albuquerque

Planning Department

Development & Building Services Division

DRAINAGE AND TRANSPORTATION INFORMATION SHEET (REV 09/2015)

Project Title: Manzano High School Portable Health Clinic Building Permit #: _____ City Drainage #: K22D020

DRB#: _____ EPC#: _____ Work Order#: _____

Legal Description: _____

City Address: 12200 Lomas Blvd, NE Albuquerque, NM 87112

Engineering Firm: Wilson & Company Engineers and Architects Contact: Eugenio Valdez

Address: 4900 Lang Ave, NE Albuquerque, NM 87109

Phone#: 505-948-5125 Fax#: _____ E-mail: eevaldez@wilsonco.com

Owner: Albuquerque Public Schools Contact: Raquel Reedy/acting superintendent

Address: P.O. Box 25704, Albuquerque, NM

Phone#: 505-848-8818 Fax#: _____ E-mail: _____

Architect: _____ Contact: _____

Address: _____

Phone#: _____ Fax#: _____ E-mail: _____

Other Contact: Albuquerque Public Schools: Portables Manager Contact: Sal War

Address: P.O. Box 25704, Albuquerque, NM

Phone#: 505-975-5965 Fax#: _____ E-mail: _____

Check all that Apply:

DEPARTMENT:

____ HYDROLOGY/ DRAINAGE
_x_ TRAFFIC/ TRANSPORTATION
____ MS4/ EROSION & SEDIMENT CONTROL

TYPE OF SUBMITTAL:

____ ENGINEER/ ARCHITECT CERTIFICATION

____ CONCEPTUAL G & D PLAN
____ GRADING PLAN
____ DRAINAGE MASTER PLAN
____ DRAINAGE REPORT
____ CLOMR/LOMR

_x_ TRAFFIC CIRCULATION LAYOUT (TCL)
____ TRAFFIC IMPACT STUDY (TIS)
____ EROSION & SEDIMENT CONTROL PLAN (ESC)

____ OTHER (SPECIFY) _____

CHECK TYPE OF APPROVAL/ACCEPTANCE SOUGHT:

____ BUILDING PERMIT APPROVAL
____ CERTIFICATE OF OCCUPANCY

____ PRELIMINARY PLAT APPROVAL
____ SITE PLAN FOR SUB'D APPROVAL
____ SITE PLAN FOR BLDG. PERMIT APPROVAL
____ FINAL PLAT APPROVAL
____ SIA/ RELEASE OF FINANCIAL GUARANTEE
_x_ FOUNDATION PERMIT APPROVAL
____ GRADING PERMIT APPROVAL
____ SO-19 APPROVAL
____ PAVING PERMIT APPROVAL
____ GRADING/ PAD CERTIFICATION
____ WORK ORDER APPROVAL
____ CLOMR/LOMR

____ PRE-DESIGN MEETING
____ OTHER (SPECIFY) _____

RECEIVED
JUL 13 2016
LAND DEVELOPMENT SECTION

IS THIS A RESUBMITTAL?: ____ Yes _x_ No

DATE SUBMITTED: June 17, 2016 By: Eugenio Valdez

COA STAFF: ELECTRONIC SUBMITTAL RECEIVED: ___

CITY OF ALBUQUERQUE

May 3, 2016

Rich Braun
Studio SW Architects
2101 Mountain Rd., NW
Albuquerque, NM 87104

Re: Manzano HS – Athletic Complex
12200 Lomas Blvd., NE
Traffic Circulation Layout
Engineer's/Architect's Stamp dated 4-25-16 (K22-D020)

Dear Mr. Braun,

The TCL submittal received 4-25-16 is approved for Building Permit. A copy of the stamped and signed plan will be needed for each of the building permit plans. Please keep the original to be used for certification of the site for final C.O. for Transportation.

When the site construction is completed and a Certificate of Occupancy (C.O.) is requested, use the original City stamped approved TCL for certification. Redline any minor changes and adjustments that were made in the field. A NM registered architect or engineer must stamp, sign, and date the certification TCL along with indicating that the development was built in "substantial compliance" with the TCL. Submit this certification TCL with a completed Drainage and Transportation Information Sheet to front counter personnel for log in and evaluation by Transportation.

Once verification of certification is completed and approved, notification will be made to Building Safety to issue Final C.O. To confirm that a final C.O. has been issued, call Building Safety at 924-3690.

Sincerely,

Racquel M. Michel, P.E.
Traffic Engineer, Planning Dept.
Development Review Services

\gs via: email
C: File

PO Box 1293
Albuquerque
New Mexico 87103
www.cabq.gov

City of Albuquerque

Planning Department

Development & Building Services Division

DRAINAGE AND TRANSPORTATION INFORMATION SHEET (REV 1/2016)

Project Title: MANZANO HS Building Permit #: 201690757 Hydrology File #: K22D020

DRB#: N/A EPC#: N/A Work Order#: _____

Legal Description: LOT MANZANO HIGH SCHOOL / UNPLATTE LANDS OF APS / ZONE R-1

City Address: 12200 LOMAS BLVD, NE PAGE K-22

Applicant: STUDIO SW ARCHITECTS Contact: SAIGE COX / RICH BRAUN

Address: 2101 MOUNTAIN RD NW / ABQ NM / 87104

Phone#: 505-843-9639 Fax#: 505-843-9639 E-mail: SCOX@STUDIOSWARCH.COM

Other Contact: APS Contact: DEVIN CANNAPY

Address: 915 OAK / ABQ

Phone#: 505-206-1673 Fax#: _____ E-mail: DEVIN.CANNADY@APS.EDU

Check all that Apply:

DEPARTMENT:

___ HYDROLOGY/ DRAINAGE

✓ TRAFFIC/ TRANSPORTATION

___ MS4/ EROSION & SEDIMENT CONTROL

TYPE OF SUBMITTAL:

___ AS-BUILT CERTIFICATION

___ CONCEPTUAL G & D PLAN

___ GRADING PLAN

___ DRAINAGE MASTER PLAN

___ DRAINAGE REPORT

___ CLOMR/LOMR

✓ TRAFFIC CIRCULATION LAYOUT (TCL)

___ TRAFFIC IMPACT STUDY (TIS)

___ NEIGHBORHOOD IMPACT ASSESMENT (NIA)

___ EROSION & SEDIMENT CONTROL PLAN (ESC)

___ OTHER (SPECIFY) _____

TYPE OF APPROVAL/ACCEPTANCE SOUGHT:

✓ BUILDING PERMIT APPROVAL

___ CERTIFICATE OF OCCUPANCY

___ GRADING/ESC PERMIT APPROVAL

___ PRELIMINARY PLAT APPROVAL

___ SITE PLAN FOR SUB'D APPROVAL

___ SITE PLAN FOR BLDG. PERMIT APPROVAL

___ FINAL PLAT APPROVAL

___ SIA/ RELEASE OF FINANCIAL GUARANTEE

___ FOUNDATION PERMIT APPROVAL

___ SO-19 APPROVAL

___ PAVING PERMIT APPROVAL

___ GRADING/ PAD CERTIFICATION

___ WORK ORDER APPROVAL

___ CLOMR/LOMR

RECEIVED AUG 25 2016 LAND DEVELOPMENT SECTION

___ **PRE-DESIGN MEETING?**

___ OTHER (SPECIFY) _____

IS THIS A RESUBMITTAL?: ___ Yes X No

DATE SUBMITTED: 4-25-16 By: R. C. Braun

COA STAFF: ELECTRONIC SUBMITTAL RECEIVED: ____ FEE RECEIVED: ____

City of Albuquerque
P.O. BOX 1293 ALBUQUERQUE, NEW MEXICO 87103

May 12, 2000

Jeff Mortensen, P.E.
Jeff Mortensen & Assoc.
6010 B Midway Park Blvd. NE
Albuquerque, NM 87109

RE: MANZANO HIGH SCHOOL IMPROVEMENTS (K22-D20). ENGINEER'S CERTIFICATION FOR Temporary CERTIFICATE OF OCCUPANCY. ENGINEER'S STAMP DATED MAY 5, 2000.

Dear Mr. Mortensen:

Based on the information provided on your May 5, 2000 submittal, the above referenced project is approved for a TEMPORARY Certificate of Occupancy. This is the written confirmation of Susan M. Colongne's aapproval given on May 5, 2000.

If I can be of further assistance, please feel free to contact me at 924-3984.

Sincerely,

John P. Murray, P.E.
Hydrology

c: Whitney Reierson
File

CITY OF ALBUQUERQUE

May 15, 2009

John Arthur Blessen, P.E.
Soleil West Architects
11930 Menaul Ste. 109
Albuquerque, New Mexico 87112

Re: Manzano High School Phase 3A Addition, 12200 Lomas Blvd. NE
Permanent Certificate of Occupancy (C.O.) - Approved
Engineer's Stamp dated 11/15/07 (K-22/D020)
Certification dated 05/14/08

Dear Mr. Blessen,

Based upon the information provided in your submittal received 5/15/09, the above referenced certification is approved for release of Permanent Certificate of Occupancy by Hydrology.

If you have any questions, you can contact me at 924-3982.

Sincerely,

Timothy E. Sims
Plan Checker—Hydrology
Development and Building Services

C: File
Co Clerk—Katrina Sigala

PO Box 1293
Albuquerque
NM 87103
www.cabq.gov

CITY OF ALBUQUERQUE

March 27, 2008

J. Arthur Blessen, P.E.
Soleil West Architects
11930 Menaul NE Suite 109
Albuquerque, NM 87112

Re: Manzano High School Phase 3A Addition Grading Plan
Engineer's Stamp dated 11-15-07 (K22/D020)

Dear Mr. Blessen,

Based upon the information provided in your submittal received 3-3-08, the above referenced plan is approved for Building Permit. Please attach a copy of this approved plan to the construction sets prior to sign-off by Hydrology.

Prior to Certificate of Occupancy release, Engineer Certification per the DPM checklist will be required

If you have any questions, you can contact me at 924-3695.

Sincerely,

Curtis A. Cherne, P.E.
Senior Engineer, Planning Dept.
Development and Building Services

C: file

PO Box 1293
Albuquerque
NM 87103
www.cabq.gov

CITY OF ALBUQUERQUE

October 29, 2010

Jason Woodruff, P.E.
Wilson & Company
4900 Lang Ave. NE
Albuquerque, NM 87109

Re: Monzano High School Staff Parking Addition, 12200 Lomas Blvd NE,
Traffic Circulation Layout
Engineer's Stamp dated 10-04-10 (K22-D020)

Dear Mr. Woodruff,

The TCL submittal received 10-21-10 is approved for Building Permit. The plan is stamped and signed as approved. A copy of this plan will be needed for each of the building permit plans. Please keep the original to be used for certification of the site for final C.O. for Transportation. **Public infrastructure or work done within City Right-of-Way shown on these plans is for information only and is not part of approval. A separate DRC and/or other appropriate permits are required to construct these items.**

If a temporary CO is needed, a copy of the original TCL that was stamped as approved by the City will be needed. This plan must include a statement that identifies the outstanding items that need to be constructed or the items that have not been built in "substantial compliance," as well as the signed and dated stamp of a NM registered architect or engineer. Submit this TCL with a completed Drainage and Transportation Information Sheet to Hydrology at the Development Services Center of Plaza Del Sol Building.

When the site is completed and a final C.O. is requested, use the original City stamped approved TCL for certification. A NM registered architect or engineer must stamp, sign, and date the certification TCL along with indicating that the development was built in "substantial compliance" with the TCL. Submit this certification TCL with a completed Drainage and Transportation Information Sheet to Hydrology at the Development Services Center of Plaza Del Sol Building.

Once verification of certification is completed and approved, notification will be made to Building Safety to issue Final C.O. To confirm that a final C.O. has been issued, call Building Safety at 924-3306.

Sincerely,

Kristal D. Metro, P.E.
Traffic Engineer, Planning Dept.
Development and Building Services

C: File

PO Box 1293
Albuquerque
NM 87103
www.cabq.gov

DRAINAGE AND TRANSPORTATION INFORMATION SHEET

(REV. 12/05 - AP)

PROJECT TITLE: Manzano High School Staff Parking ZONE MAP/DRG. K-22 / D020

DRB#: _____ EPC#: _____ WORK ORDER #: _____

LEGAL DESCRIPTION: _____

CITY ADDRESS: 12200 Lomas Blvd

ENGINEERING FIRM: Wilson & Company CONTACT: Nathan Burns, EIT
ADDRESS: 4900 Lang Ave. NE PHONE: 505-948-5123
CITY, STATE: Albuqueruqe, NM ZIP CODE: 87109

OWNER: APS CONTACT: Tyler Mason
ADDRESS: 915 Oak Street PHONE: 505-848-8822
CITY, STATE: Albuqueruque New Mexico ZIP CODE: 87106

ARCHITECT: Wilson & Company CONTACT: See Engineer Above
ADDRESS: 4900 Lang Ave. NE PHONE: 505-948-5123
CITY, STATE: Albuquerque, NM ZIP CODE: 87109

SURVEYING FIRM: Wilson & Company LICENSED SURVEYOR: Ben Aragon
ADDRESS: 4900 Lang Ave. NE PHONE: 505-348-4067
CITY, STATE: Albuquerque, NM ZIP CODE: 87109

CONTRACTOR: _____ CONTACT: _____
ADDRESS: _____ PHONE: _____
CITY, STATE: _____ ZIP CODE: _____

CHECK TYPE OF SUBMITTAL:

____ DRAINAGE REPORT - RESUBMITTAL
____ DRAINAGE PLAN 1st SUBMITTAL
____ DRAINAGE PLAN RESUBMITTAL
____ CONCEPTUAL GRADING & DRAINAGE PLAN
____ GRADING PLAN
____ EROSION CONTROL PLAN
____ ENGINEER'S CERT (HYDROLOGY)
____ CLOMR\LOMR
_X_ TRAFFIC CIRCULTAION LAYOUT
____ ENGINEER/ARCHITECT CERT (TCL)
____ ENGINEER/ARCHITECT CERT (DRB S. P.)
____ ENGINEER/ARCHITECT CERT (AA)
____ OTHER (SPECIFY)

CHECK TYPE OF APPROVAL SOUGHT:

____ SIA / FINANCIAL GUARANTEE RELEASE
____ PRELIMINARY PLAT APPROVAL
____ S. DEV. PLAN FOR SUB'D. APPROVAL
____ S. DEV. PLAN FOR BLDG. PERMIT APPROVAL
____ SECTOR PLAN APPROVAL
____ FINAL PLAT APPROVAL
____ FOUNDATION PERMIT APPROVAL
_X_ BUILDING PERMIT APPROVAL
____ CERTIFICATE OF OCCUPANCY (PERM.)
____ CERTIFICATE OF OCCUPANCY (TEMP)
____ GRADING PERMIT APPROVAL
____ PAVING PERMIT APPROVAL
____ WORK ORDER APPROVAL
_X_ OTHER (SPECIFY) SO #19

WAS A PRE-DESIGN CONFERENCE ATTENDED:

_____ YES
_x_ NO
_____ COPY PROVIDED

RECEIVED
OCT 2 1 2010
HYDROLOGY SECTION

Submitted By: Jason Woodruff, PE DATE: 10/21/10

Requests for approvals of Site Development Plans and/or Subdivision Plats shall be accompanied by a drainage submittal. The particular nature, location and scope of the proposed development define the degree of drainage detail. One or more of the following levels of submittal may be required based on the following:

1. **Conceptual Grading and Drainage Plan:** Required for approval of Site Development Plans greater than five
2. **Drainage Plans**: Required for building permits, grading permits, paving permits and site plans less than five (5)
3. **Drainage Report:** Required for subdivisions containing more than ten (10) lots or constituting five (5) acres or more.

CITY OF ALBUQUERQUE

October 15, 2010

Jason Woodruff, P.E.
Wilson & Company
4900 Lang Ave. NE
Albuquerque, NM 87109

Re: Monzano High School Staff Parking Addition, 12200 Lomas Blvd NE, Traffic Circulation Layout

Engineer's Stamp dated 10-04-10 (K22-D020)

Dear Mr. Woodruff,

Based upon the information provided in your submittal received 10-05-10, the above referenced plan cannot be approved for Building Permit until the following comments are addressed:

1. Please show a vicinity map on the plan.
2. Clarify the location of the proposed parking lot within the site. Show the nearby existing curbcuts on Lomas.
3. Is the handicapped parking flush with the adjacent sidewalk? Please note this on the plan.
4. Define width of the existing sidewalk.
5. Is there a median break at the site?
6. The drive aisle must be a minimum of 24 feet wide (see the *Development Process Manual,* Figure 23.7.1).
7. Clarify the connection to the existing parking lot to the east.

If you have any questions, you can contact me at 924-3991.

Sincerely,

Kristal D. Metro, P.E.
Traffic Engineer, Planning Dept.
Development and Building Services

C: File

PO Box 1293
Albuquerque
NM 87103
www.cabq.gov

DRAINAGE AND TRANSPORTATION INFORMATION SHEET

(REV. 12/05 - AP)

PROJECT TITLE: Manzano High School Staff Parking ZONE MAP/DRG. K-22 D020

DRB#: _____ EPC#: _____ WORK ORDER #: _____

LEGAL DESCRIPTION: _____

CITY ADDRESS: 12200 Lomas Blvd

ENGINEERING FIRM: Wilson & Company CONTACT: Nathan Burns, EIT
ADDRESS: 4900 Lang Ave. NE PHONE: 505-948-5123
CITY, STATE: Albuqueruqe, NM ZIP CODE: 87109

OWNER: APS CONTACT: Tyler Mason
ADDRESS: 915 Oak Street PHONE: 505-848-8822
CITY, STATE: Albuqueruque New Mexico ZIP CODE: 87106

ARCHITECT: Wilson & Company CONTACT: See Engineer Above
ADDRESS: 4900 Lang Ave. NE PHONE: 505-948-5123
CITY, STATE: Albuquerque, NM ZIP CODE: 87109

SURVEYING FIRM: Wilson & Company LICENSED SURVEYOR: Ben Aragon
ADDRESS: 4900 Lang Ave. NE PHONE: 505-348-4067
CITY, STATE: Albuquerque, NM ZIP CODE: 87109

CONTRACTOR: _____ CONTACT: _____
ADDRESS: _____ PHONE: _____
CITY, STATE: _____ ZIP CODE: _____

CHECK TYPE OF SUBMITTAL:

____ DRAINAGE REPORT - RESUBMITTAL
____ DRAINAGE PLAN 1st SUBMITTAL
____ DRAINAGE PLAN RESUBMITTAL
____ CONCEPTUAL GRADING & DRAINAGE PLAN
____ GRADING PLAN
____ EROSION CONTROL PLAN
____ ENGINEER'S CERT (HYDROLOGY)
____ CLOMR\LOMR
X TRAFFIC CIRCULTAION LAYOUT
____ ENGINEER/ARCHITECT CERT (TCL)
____ ENGINEER/ARCHITECT CERT (DRB S. P.)
____ ENGINEER/ARCHITECT CERT (AA)
____ OTHER (SPECIFY)

CHECK TYPE OF APPROVAL SOUGHT:

____ SIA / FINANCIAL GUARANTEE RELEASE
____ PRELIMINARY PLAT APPROVAL
____ S. DEV. PLAN FOR SUB'D. APPROVAL
____ S. DEV. PLAN FOR BLDG. PERMIT APPROVAL
____ SECTOR PLAN APPROVAL
____ FINAL PLAT APPROVAL
____ FOUNDATION PERMIT APPROVAL
X BUILDING PERMIT APPROVAL
____ CERTIFICATE OF OCCUPANCY (PERM.)
____ CERTIFICATE OF OCCUPANCY (TEMP)
____ GRADING PERMIT APPROVAL
____ PAVING PERMIT APPROVAL
____ WORK ORDER APPROVAL
X OTHER (SPECIFY) SO #19

RECEIVED
OCT 05 2010
HYDROLOGY SECTION

WAS A PRE-DESIGN CONFERENCE ATTENDED:

____ YES
x NO
____ COPY PROVIDED

Submitted By: Jason Woodruff, PE DATE: 09/29/10

Requests for approvals of Site Development Plans and/or Subdivision Plats shall be accompanied by a drainage submittal. The particular nature, location and scope of the proposed development define the degree of drainage detail. One or more of the following levels of submittal may be required based on the following:

1. **Conceptual Grading and Drainage Plan:** Required for approval of Site Development Plans greater than five
2. **Drainage Plans:** Required for building permits, grading permits, paving permits and site plans less than five (5)
3. **Drainage Report:** Required for subdivisions containing more than ten (10) lots or constituting five (5) acres or more.

WILSON
&COMPANY

4900 Lang Ave. NE
Albuquerque, NM 87109
505-348-4000
505-348-4072 Fax

Albuquerque
Colorado Springs
Denver
Fort Worth
Houston
Kansas City
Lenexa
Omaha
Pasadena
Phoenix
Rio Rancho
Salina
San Bernardino
San Diego

Wilson & Company
Latin America, LLC

September 29, 2010

Kristol Metro
Traffic Engineer, Planning Dept
Development and Building Services
City of Albuquerque
600 2nd Street NW
Albuquerque, NM 87102

Re: Manzano HS Staff Parking Addition, TCL

Dear Kristol:

The following is our response to your comments on the proposed re-paving project at Manzano HS dated 9/23/10. My responses will directly address each of the similarly numbered punch list items:

1. Parking stall widths increased to 9 ft wide and dimensions added to the TCL.
2. Vicinity map added.
3. Project location identified in vicinity map.
4. Handicap parking is flush with adjacent sidewalk.
5. Sign removed.
6. Dimension for existing sidewalk added. Sidewalk is 6 ft wide.
7. Additional build notes added to the TCL.
8. The drivepad is a right-in/right-out access only with no median break.
9. Drivepad width increased to 30 ft.
10. The chainlink fence is being removed from the project along back of sidewalk. The new sight triangle meets the conditions spelled out in the COA DPM.
11. Aisle width is called out in the revised plan.

If you have any further questions or concerns, feel free to call.

WILSON & COMPANY

J. Woodruff

Jason Woodruff, PE
Civil Engineer

cc: File

RECEIVED
OCT 05 2010
HYDROLOGY SECTION

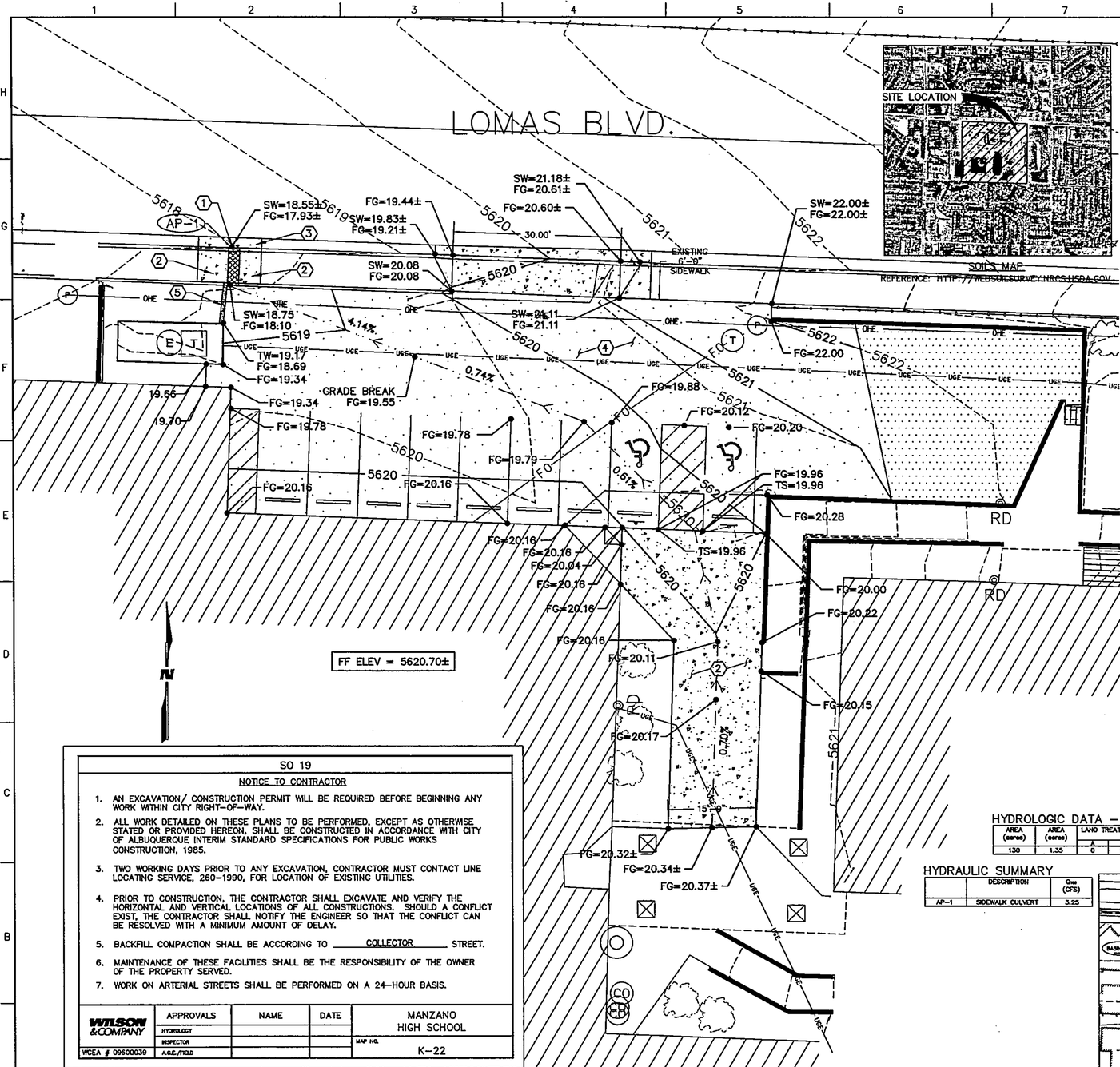

SOILS MAP
REFERENCE: HTTP://WEBSOILSURVEY.NRCS.USDA.GOV

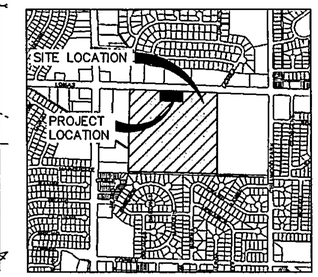

LOCATION
ZONE ATLAS MAP: K-22

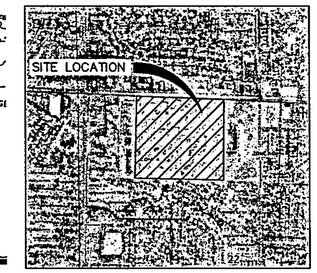

FLOOD INSURANCE RATE MAP
REFERENCE: FLOOD INSURANCE STUDY
PANEL 359 #35001C0359G

EXISTING CONDITIONS

THE SITE CONSISTS OF AN EXISTING PARKING LOT SURROUNDED BY CAMPUS BUILDINGS AND WALKWAYS TO THE SOUTH. PORTIONS OF ADJACENT BUILDINGS DISCHARGE ACROSS THE SITE VIA ROOF-TOP DRAINS. ONSITE RUNOFF IS CONVEYED OFFSITE TO LOMAS BLVD VIA SURFACE FLOW WITH MINOR AREAS OF POOLING IN THE EXISTING PARKING LOT. CURRENT ASPHALT AND CONCRETE HAVE BEGAN DETERIORATING .THE SITE IS CONTAINED IN BASIN 130 IN THE APPROVED "MANZANO HS DRAINAGE MASTER PLAN" (WILSON & COMPANY, 2009). BASIN 130 DISCHARGES TO LOMAS WITH A PEAK FLOW RATE OF 6.60 CFS IN THE CASE OF THE 100-YEAR / 6-HOUR STORM EVENT.

PROPOSED CONDITIONS

THE PROPOSED SITE WILL INCLUDE A RECONFIGURED PARKING LOT WITH NO INCREASE IN IMPERVIOUS AREA. NO INCREASE IN SURFACE RUN-OFF WILL OCCUR. A SIDEWALK CULVERT WILL BE INSTALLED IN THE NORTHWEST CORNER OF THE PARKING LOT TO ALLOW FOR SUFFICIENT DRAINAGE. THE PARKING LOT GRADING WILL ALLOW RUNOFF TO EFFICIENTLY DRAIN TO THE SIDEWALK CULVERT AND WILL NO LONGER DRAIN OVER THE SIDEWALK ALONG LOMAS BLVD.

HYDROLOGIC DATA – EXISTING

AREA (acres)	AREA (acres)	LAND TREATMENT PERCENTAGES BY TYPE				YIELD (cfs/acres)	Q_{pk} (cfs)	Q_{avg} (cfs)	V_{100-24} (acre-ft)
		A	B	C	D				
130	1.35	0	15	0	85	4.907	4.28	6.60	0.328

HYDRAULIC SUMMARY

	DESCRIPTION	Q_{100} (CFS)
AP-1	SIDEWALK CULVERT	3.25

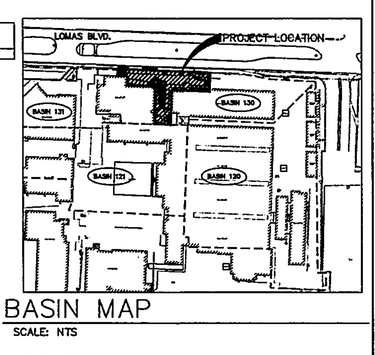

BASIN MAP
SCALE: NTS

KEYED NOTES

1. INSTALL 2'-0" W SIDEWALK CULVERT. PER STD DWG 2236
2. INSTALL 4" PCC SIDEWALK. SEE DETAIL B9/C-501
3. INSTALL STANDARD CURB AND GUTTER. PER STD DWG 2415A
4. INSTALL 3" ASPHALT PAVEMENT. SEE DETAIL E9/C-501.
5. INSTALL 8" BARRIER CURB. SEE DETAIL G9/C-501.

LEGEND

(P)	ELECTRICAL, POWER POLE
(E)	ELECTRICAL, MANHOLE
[T]	ELECTRICAL, TRANSFORMER
(T)	UTILITY, TELEPHONE MANHOLE
(S)	UTILITY, SANITARY CLEANOUT
	SITE, SIGN
	SITE, ROOF DRAIN
	SITE, COLUMN (8"x8" STEEL)
	SITE, BUSHES
	SITE, TREE
	PROPOSED CHAINLINK FENCE
FG	FINISHED GRADE
SW	SIDEWALK WALK GRADE
TW	TOP OF WALL GRADE
	PROP. SEAL COAT
	PROP. 3" ASPHALT
	PROP. PCC

SO 19

NOTICE TO CONTRACTOR

1. AN EXCAVATION/ CONSTRUCTION PERMIT WILL BE REQUIRED BEFORE BEGINNING ANY WORK WITHIN CITY RIGHT-OF-WAY.
2. ALL WORK DETAILED ON THESE PLANS TO BE PERFORMED, EXCEPT AS OTHERWISE STATED OR PROVIDED HEREON, SHALL BE CONSTRUCTED IN ACCORDANCE WITH CITY OF ALBUQUERQUE INTERIM STANDARD SPECIFICATIONS FOR PUBLIC WORKS CONSTRUCTION, 1985.
3. TWO WORKING DAYS PRIOR TO ANY EXCAVATION, CONTRACTOR MUST CONTACT LINE LOCATING SERVICE, 260-1990, FOR LOCATION OF EXISTING UTILITIES.
4. PRIOR TO CONSTRUCTION, THE CONTRACTOR SHALL EXCAVATE AND VERIFY THE HORIZONTAL AND VERTICAL LOCATIONS OF ALL CONSTRUCTIONS. SHOULD A CONFLICT EXIST, THE CONTRACTOR SHALL NOTIFY THE ENGINEER SO THAT THE CONFLICT CAN BE RESOLVED WITH A MINIMUM AMOUNT OF DELAY.
5. BACKFILL COMPACTION SHALL BE ACCORDING TO COLLECTOR STREET.
6. MAINTENANCE OF THESE FACILITIES SHALL BE THE RESPONSIBILITY OF THE OWNER OF THE PROPERTY SERVED.
7. WORK ON ARTERIAL STREETS SHALL BE PERFORMED ON A 24-HOUR BASIS.

WILSON & COMPANY	APPROVALS	NAME	DATE	MANZANO HIGH SCHOOL
	HYDROLOGY			
	INSPECTOR			MAP NO.
WCEA # 09600039	A.C.E./FIELD			K-22

A1 GRADING AND DRAINAGE PLAN
SCALE: 1"=10'

WILSON & COMPANY
2600 THE AMERICAN RD. SE SUITE 100
RIO RANCHO, NM 87124
PHONE: 505-896-8501
FAX: 505-896-8501
www.wilsonco.com

CONSULTANTS

SEAL

PROJECT NAME: MANZANO HIGH SCHOOL STAFF PARKING PLAN

MARK	DATE	DESCRIPTION

PROJECT NO:	1060005400
DESIGNED BY:	JRW
DRAWN BY:	JLL
CHECKED BY:	JRW
DATE:	

SHEET TITLE: GRADING AND DRAINAGE PLAN

SHEET NO: C-102

RECEIVED
OCT 05 2010
HYDROLOGY SECTION

M:\IDS\10-600-054-00\CADD\SHEETS\03 G&D\10600054_GD.dwg 9/3/2010 11:10:40 AM CDT

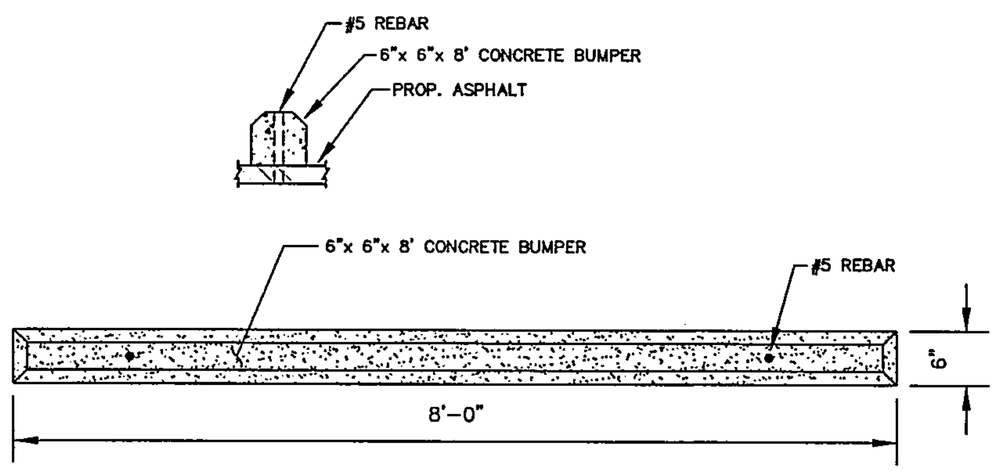

D2 WHEEL STOP DETAIL
SCALE: NTS

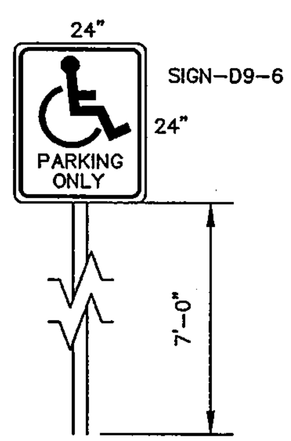

B2 HC SIGN DETAIL
SCALE: NTS

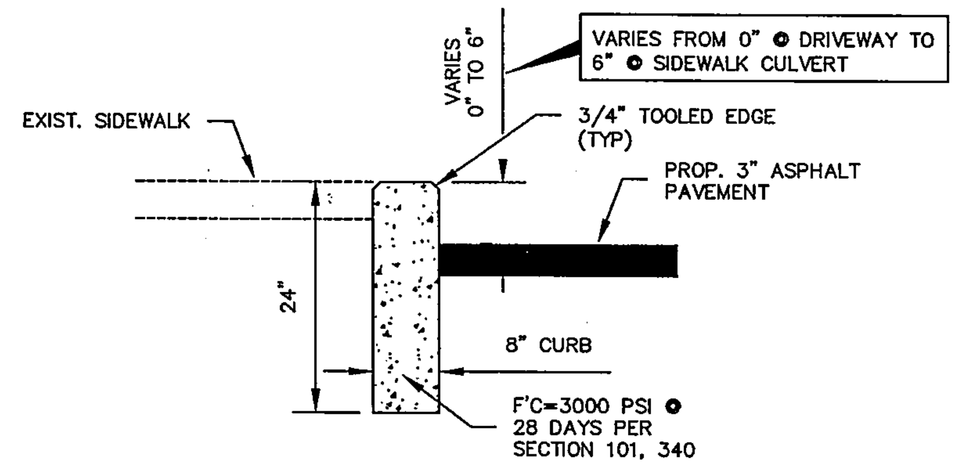

G6 TAPERED CURB DETAIL
SCALE: NTS

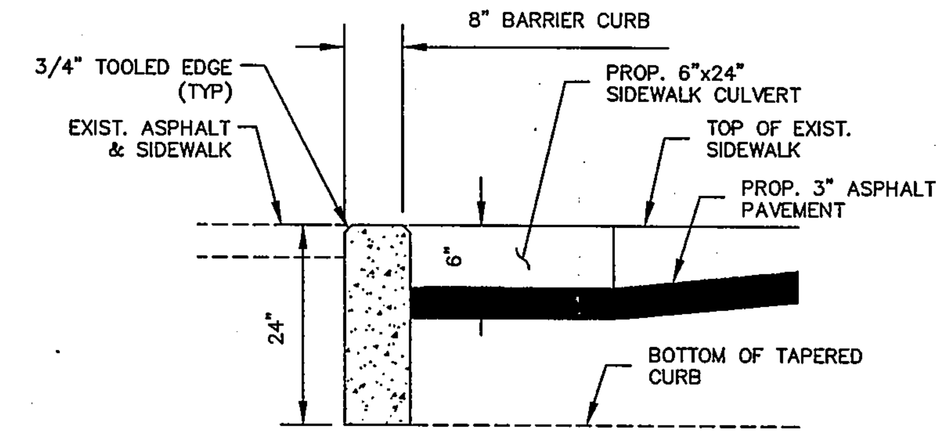

G9 BARRIER CURB DETAIL
SCALE: NTS

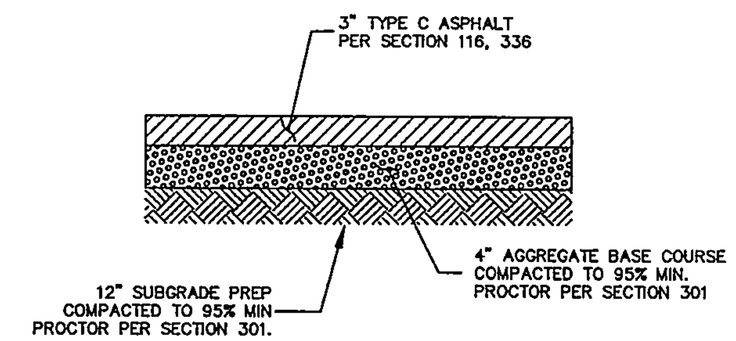

E9 3" ASPHALT SECTION
SCALE: NTS

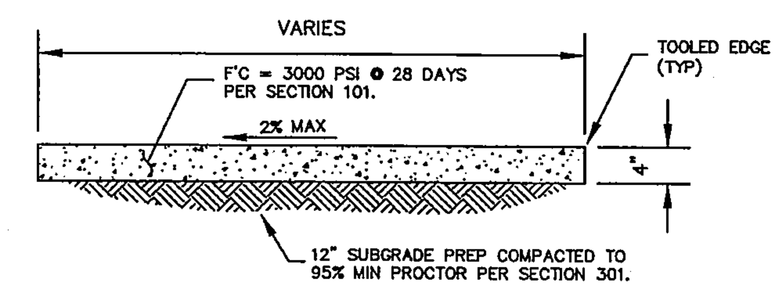

NOTE:
1. AS MUCH AS POSSIBLE SIDEWALK JOINTS SHALL MATCH CURB & GUTTER JOINT SPACING.
2. EXPANSION JOINTS TO BE INSTALLED AT 30' INTERVALS LONGITUDINALLY.
3. EXPANSION JOINTS SHALL BE INSTALLED BETWEEN NEW SIDEWALK AND EXISTING BUILDING, CURB & GUTTER, SIDEWALK, ETC.
4. EXPASION JOINTS TO INCLUDE BITUMINOUS EXPANSION BOARD, ZIPSTRIP, AND SIKA FLEX.

B9 4" PCC SIDEWALK
SCALE: NTS

WILSON & COMPANY
2600 THE AMERICAN RD. SE, SUITE 100
RIO RANCHO, NM 87124
PHONE: 505-896-8021
FAX: 505-896-8501
www.wilsonco.com

CONSULTANTS

SEAL

PROJECT NAME
MANZANO HIGH SCHOOL
STAFF PARKING
PLAN

MARK	DATE	DESCRIPTION

PROJECT NO:	1060005400
DESIGNED BY:	JRW
DRAWN BY:	JLL
CHECKED BY:	JRW
DATE:	
SHEET TITLE	DETAILS
SHEET NO:	C-501

RECEIVED
OCT 05 2010
HYDROLOGY SECTION

M:±IDS±10-600-054-00±CADD±SHEETS±05 DETAILS±10600054_DETAILS.dwg 9/9/2010 3:18:44 PM MDT

CITY OF ALBUQUERQUE

October 1, 2010

Jason R. Woodruff, P.E.
Wilson & Company, Inc.
4900 Lang Ave. NE
Albuquerque, NM 87109

Re: Manzano High School Staff Parking Plan
Grading and Drainage Plan
Engineer's Stamp dated 09-16-2010 (K22/D020)

Dear Mr. Woodruff,

Based upon the information provided in your submittal received 09-22-10, the above referenced plan is approved for Grading Permit, Paving Permit and SO-19.

The storm drain work in the City ROW must be inspected and accepted. Please contact Dave Silva, 857-8074, to schedule an inspection.

Upon completion of this project, please provide an Engineer Certification for our files.

If you have any questions, you can contact me at 924-3695.

Sincerely,

Curtis A. Cherne, P.E.
Senior Engineer, Planning Dept.
Development and Building Services

C: Antoinette Baldonado, Excavation and Barricading
Dave Silva, Street/Storm Drain Maintenance
File

PO Box 1293
Albuquerque
NM 87103
www.cabq.gov

DRAINAGE AND TRANSPORTATION INFORMATION SHEET

(REV. 12/05 - AP)

PROJECT TITLE: Manzano High School Staff Parking ZONE MAP/DRG. K-22 / D020

DRB#: _____ EPC#: _____ WORK ORDER #: _____

LEGAL DESCRIPTION: _____

CITY ADDRESS: 12200 Lomas Blvd

ENGINEERING FIRM: Wilson & Company CONTACT: Nathan Burns, EIT
ADDRESS: 4900 Lang Ave. NE PHONE: 505-948-5123
CITY, STATE: Albuqueruge, NM ZIP CODE: 87109

OWNER: APS CONTACT: Tyler Mason
ADDRESS: 915 Oak Street PHONE: 505-848-8822
CITY, STATE: Albuqueruque New Mexico ZIP CODE: 87106

ARCHITECT: Wilson & Company CONTACT: See Engineer Above
ADDRESS: 4900 Lang Ave. NE PHONE: 505-948-5123
CITY, STATE: Albuquerque, NM ZIP CODE: 87109

SURVEYING FIRM: Wilson & Company LICENSED SURVEYOR: Ben Aragon
ADDRESS: 4900 Lang Ave. NE PHONE: 505-348-4067
CITY, STATE: Albuquerque, NM ZIP CODE: 87109

CONTRACTOR: _____ CONTACT: _____
ADDRESS: _____ PHONE: _____
CITY, STATE: _____ ZIP CODE: _____

CHECK TYPE OF SUBMITTAL:

___ DRAINAGE REPORT - RESUBMITTAL
X DRAINAGE PLAN 1st SUBMITTAL
___ DRAINAGE PLAN RESUBMITTAL
___ CONCEPTUAL GRADING & DRAINAGE PLAN
X GRADING PLAN
___ EROSION CONTROL PLAN
___ ENGINEER'S CERT (HYDROLOGY)
___ CLOMR\LOMR
___ TRAFFIC CIRCULTAION LAYOUT
___ ENGINEER/ARCHITECT CERT (TCL)
___ ENGINEER/ARCHITECT CERT (DRB S. P.)
___ ENGINEER/ARCHITECT CERT (AA)
___ OTHER (SPECIFY)

CHECK TYPE OF APPROVAL SOUGHT:

___ SIA / FINANCIAL GUARANTEE RELEASE
___ PRELIMINARY PLAT APPROVAL
___ S. DEV. PLAN FOR SUB'D. APPROVAL
___ S. DEV. PLAN FOR BLDG. PERMIT APPROVAL
___ SECTOR PLAN APPROVAL
___ FINAL PLAT APPROVAL
___ FOUNDATION PERMIT APPROVAL
___ BUILDING PERMIT APPROVAL
___ CERTIFICATE OF OCCUPANCY (PERM.)
___ CERTIFICATE OF OCCUPANCY (TEMP)
X GRADING PERMIT APPROVAL
X PAVING PERMIT APPROVAL
___ WORK ORDER APPROVAL
X OTHER (SPECIFY) SO#19

RECEIVED
SEP 2 2 2010
HYDROLOGY SECTION

WAS A PRE-DESIGN CONFERENCE ATTENDED:

___ YES
x NO
___ COPY PROVIDED

Submitted By: Nathan Burns DATE: 09/22/10

Requests for approvals of Site Development Plans and/or Subdivision Plats shall be accompanied by a drainage submittal. The particular nature, location and scope of the proposed development define the degree of drainage detail. One or more of the following levels of submittal may be required based on the following:

1. **Conceptual Grading and Drainage Plan:** Required for approval of Site Development Plans greater than five
2. **Drainage Plans:** Required for building permits, grading permits, paving permits and site plans less than five (5)
3. **Drainage Report:** Required for subdivisions containing more than ten (10) lots or constituting five (5) acres or more.

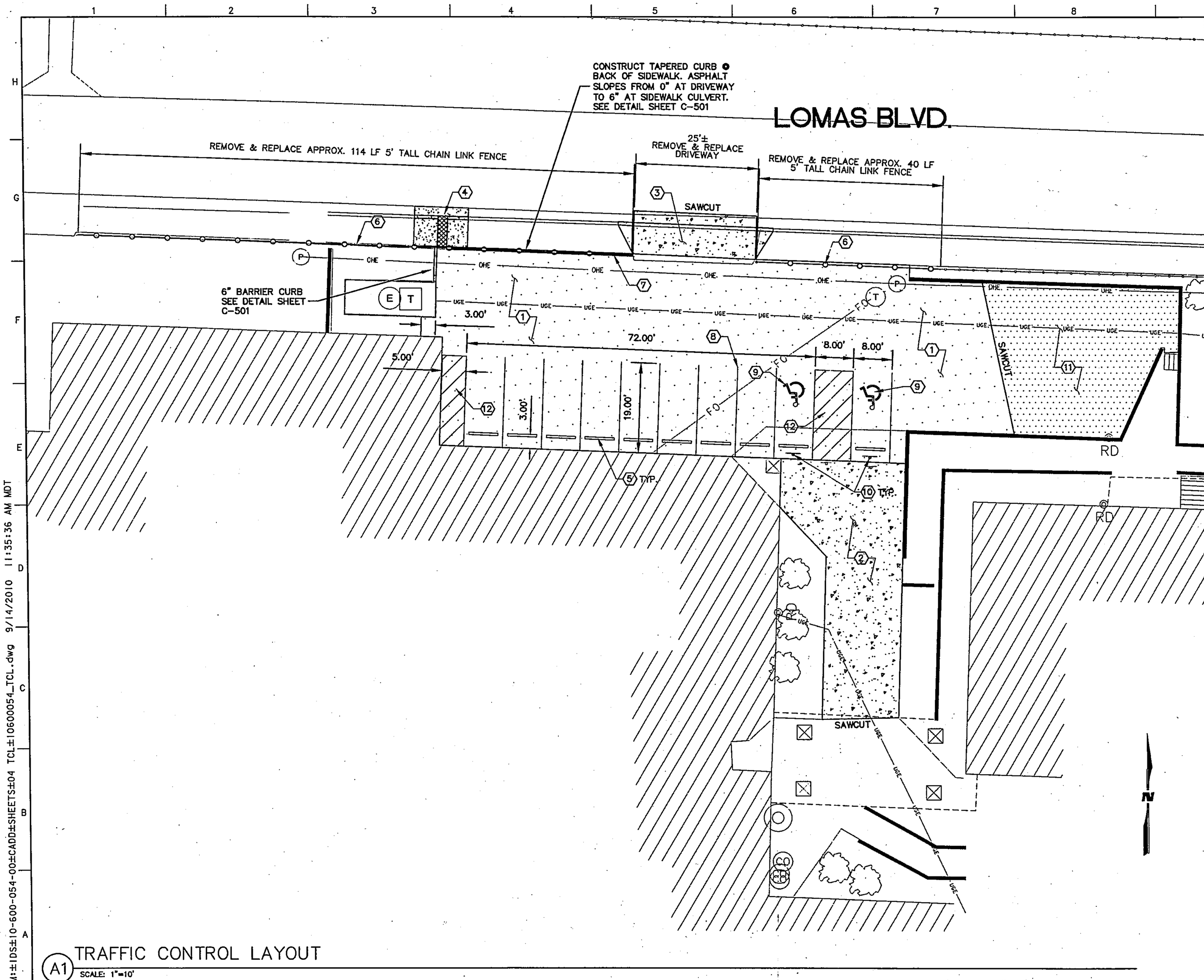

A1 TRAFFIC CONTROL LAYOUT
SCALE: 1"=10'

GENERAL NOTES

1. SALVAGED BICYCLE RACKS TO BE LOCATED AS DIRECTED BY SCHOOL.

SHEET KEY NOTES

1. INSTALL 3" ASPHALT, SEE DETAIL E9/C-501.
2. INSTALL 4" PCC WALK. SEE DETAIL B9/C-501.
3. INSTALL COA PAVING DRIVEPAD, DWG 2425.
4. INSTALL 2'-0" WIDE COA DRAINAGE SIDEWALK CULVERT WITH STEEL PLATE TOP. SEE DETAIL DWG 2236.
5. INSTALL WHEEL STOPS. SEE DETAIL D2/C-501. REPLACE DAMAGED WHEEL STOPS.
6. INSTALL 5'-0" CHAINLINK FENCE. SEE DETAIL DWG 2252.
7. RE-INSTALL SLIDE GATE AT DRIVEWAY ENTRANCE. REPAIR OR REPLACE ANY DAMAGED HARDWARE.
8. INSTALL 4" SOLID WHITE PAVEMENT STRIPING.
9. INSTALL 4'-0"H ADA BLUE PAVEMENT MARKING AND SYMBOL FOR HANDICAP PARKING (TYP).
10. INSTALL "HC PARKING" SIGN & POLE ASSY.
11. PLACE SEAL COAT ON EXISTING ASPHALT IN THE PARKING LOT WHICH IS TO REMAIN.
12. INSTALL 4" SOLID WHITE DIAGONAL PAVEMENT STRIPINGS.

LEGEND

- ELECTRICAL, POWER POLE
- ELECTRICAL, MANHOLE
- ELECTRICAL, TRANSFORMER
- UTILITY, TELEPHONE MANHOLE
- UTILITY, SANITARY CLEANOUT
- SITE, SIGN
- SITE, ROOF DRAIN
- SITE, COLUMN (8"x8" STEEL)
- SITE, BUSHES
- SITE, TREE
- PROP. CHAINLINK FENCE
- PROP. PCC WALK
- PROP. 3" ASPHALT PAVEMENT
- PROP. SEAL COAT

WILSON & COMPANY
2600 THE AMERICAN RD. SE SUITE 100
RIO RANCHO, NM 87124
PHONE: 505-898-8021
FAX: 505-898-8501
www.wilsonco.com

CONSULTANTS

SEAL

PROJECT NAME
MANZANO HIGH SCHOOL STAFF PARKING PLAN

MARK	DATE	DESCRIPTION

PROJECT NO:	
DESIGNED BY:	JRW
DRAWN BY:	JLL
CHECKED BY:	JRW
DATE:	

SHEET TITLE
TRAFFIC CONTROL LAYOUT

SHEET NO:
C-103

M:\IDS\10-600-054-00\CADD\SHEETS\04 TCL\10600054_TCL.dwg 9/14/2010 11:35:36 AM MDT

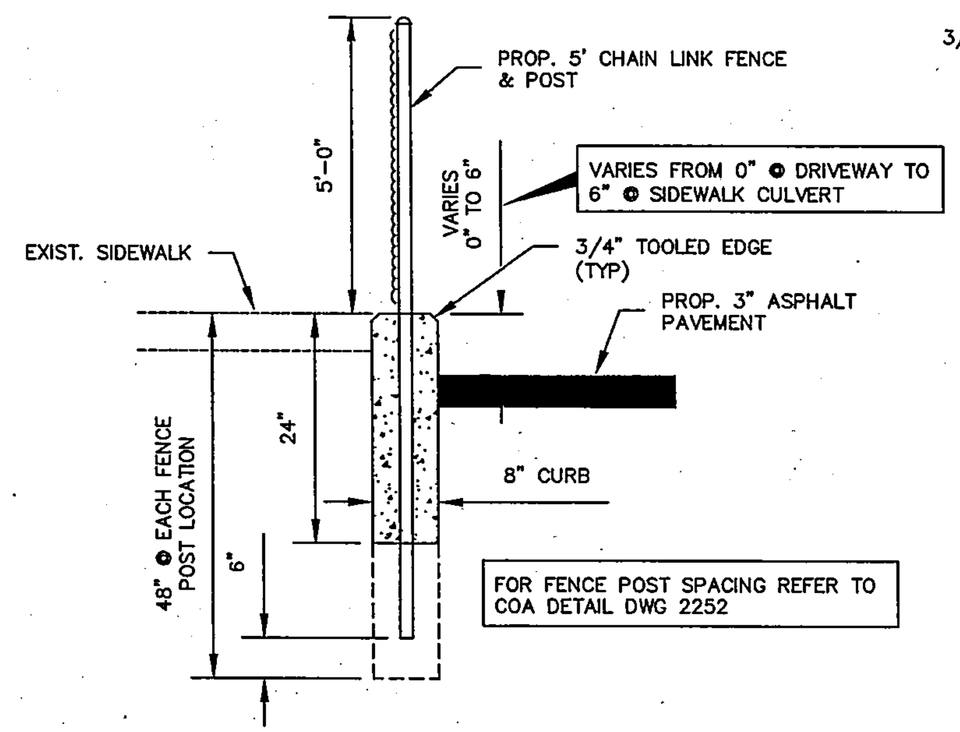

G6 TAPERED CURB DETAIL
SCALE: NTS

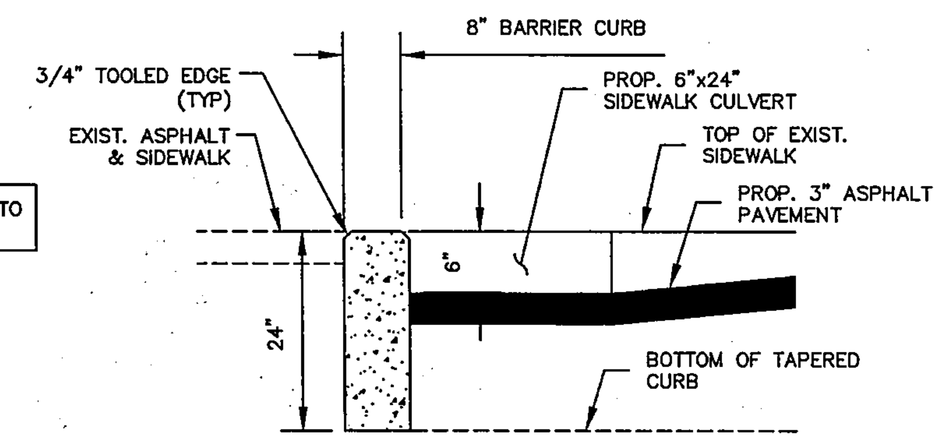

G9 BARRIER CURB DETAIL
SCALE: NTS

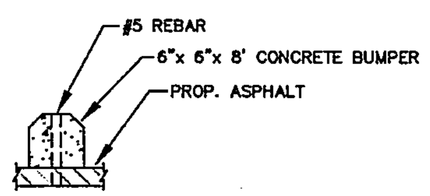

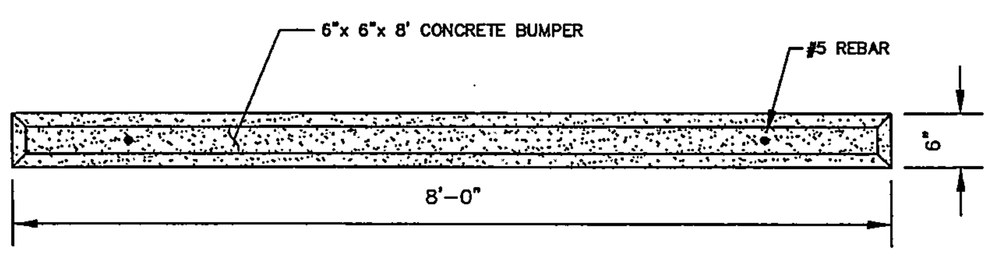

D2 WHEEL STOP DETAIL
SCALE: NTS

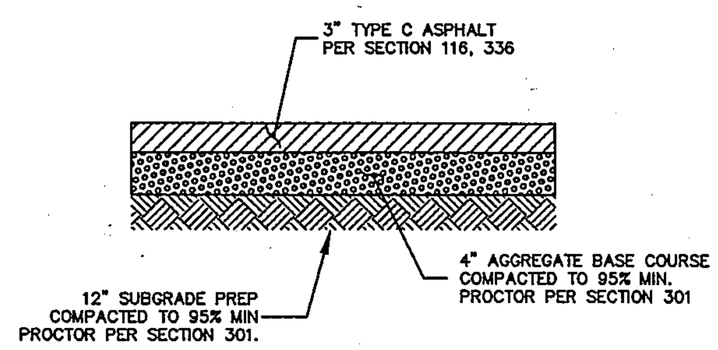

E9 3" ASPHALT SECTION
SCALE: NTS

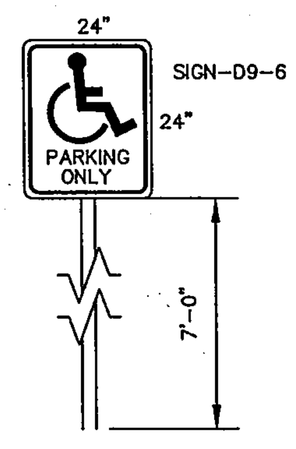

B2 HC SIGN DETAIL
SCALE: NTS

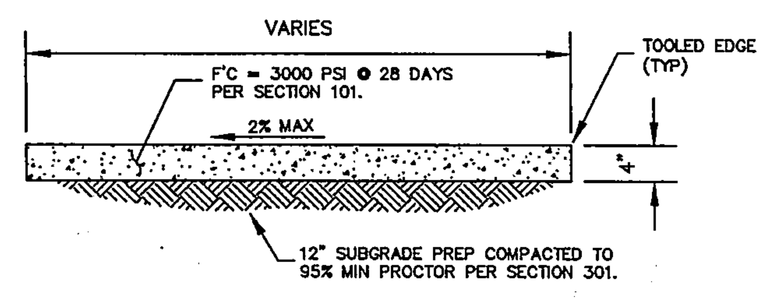

NOTE:
1. AS MUCH AS POSSIBLE SIDEWALK JOINTS SHALL MATCH CURB & GUTTER JOINT SPACING.
2. EXPANSION JOINTS TO BE INSTALLED AT 30' INTERVALS LONGITUDINALLY.
3. EXPANSION JOINTS SHALL BE INSTALLED BETWEEN NEW SIDEWALK AND EXISTING BUILDING, CURB & GUTTER, SIDEWALK, ETC.
4. EXPASION JOINTS TO INCLUDE BITUMINOUS EXPANSION BOARD, ZIPSTRIP, AND SIKA FLEX.

B9 4" PCC SIDEWALK
SCALE: NTS

WILSON & COMPANY
2600 THE AMERICAN RD. SE SUITE 100
RIO RANCHO, NM 87124
PHONE: 505-896-8021
FAX: 505-896-8051
www.wilsonco.com

CONSULTANTS

SEAL

PROJECT NAME
MANZANO HIGH SCHOOL STAFF PARKING PLAN

MARK	DATE	DESCRIPTION

PROJECT NO:	
DESIGNED BY:	JRW
DRAWN BY:	JLL
CHECKED BY:	JRW
DATE:	

SHEET TITLE
DETAILS

SHEET NO:
C-501

S:±10-600-054-00±CADD±SHEETS±05 DETAILS±10600054_DETAILS.dwg 9/9/2010 3:18:44 PM MDT

CITY OF ALBUQUERQUE

September 23, 2010

Jason Woodruff, P.E.
Wilson & Company
4900 Lang Ave. NE
Albuquerque, NM 87109

Re: Monzano High School Staff Parking Addition, 12200 Lomas Blvd NE, Traffic Circulation Layout

Engineer's Stamp dated 09-16-10 (K22-D020)

Dear Mr. Woodruff,

Based upon the information provided in your submittal received 09-16-10, the above referenced plan cannot be approved for Building Permit until the following comments are addressed:

1. List the width and length for all parking spaces; please note that a standard parking stall must be a minimum of 8.5 feet in width.
2. Please show a vicinity map.
3. Clarify the location of the proposed parking lot within the site.
4. Is the handicapped parking flush with the adjacent sidewalk? Please note this on the plan.
5. Remove the existing sign adjacent to the van accessable aisle.
6. Define width of the existing sidewalk.
7. Build notes, referring to a specific City of Albuquerque Standard, must be provided for all items to be built within City right of way.
8. Is there a median break at the site?
9. Since Lomas Blvd is an arterial roadway, driveways with right in / right out only have a minimum driveway width of 30 feet (see the *Development Process Manual*, Chapter 23, Section 6, Part B.8).
10. Will the chain link fences interfere with the sight distance at the entrances? Please provide a sight distance exhibit for the entrance (See the *Development Process Manual*, Chapter 23, Section 6, Part B.12).
11. Call out the aisle width in the parking lot.

If you have any questions, you can contact me at 924-3991.

Sincerely,

Kristal D. Metro, P.E.
Traffic Engineer, Planning Dept.
Development and Building Services

C: File

PO Box 1293

Albuquerque

NM 87103

www.cabq.gov

DRAINAGE AND TRANSPORTATION INFORMATION SHEET

(REV. 12/05 - AP)

PROJECT TITLE: Manzano High School Staff Parking ZONE MAP/DRG. K-22 /D020.

DRB#: _____ EPC#: _____ WORK ORDER #: _____

LEGAL DESCRIPTION: _____

CITY ADDRESS: 12200 Lomas Blvd

ENGINEERING FIRM: Wilson & Company CONTACT: Nathan Burns, EIT
ADDRESS: 4900 Lang Ave. NE PHONE: 505-948-5123
CITY, STATE: Albuqueruqe, NM ZIP CODE: 87109

OWNER: APS CONTACT: Tyler Mason
ADDRESS: 915 Oak Street PHONE: 505-848-8822
CITY, STATE: Albuqueruque New Mexico ZIP CODE: 87106

ARCHITECT: Wilson & Company CONTACT: See Engineer Above
ADDRESS: 4900 Lang Ave. NE PHONE: 505-948-5123
CITY, STATE: Albuquerque, NM ZIP CODE: 87109

SURVEYING FIRM: Wilson & Company LICENSED SURVEYOR: Ben Aragon
ADDRESS: 4900 Lang Ave. NE PHONE: 505-348-4067
CITY, STATE: Albuquerque, NM ZIP CODE: 87109

CONTRACTOR: _____ CONTACT: _____
ADDRESS: _____ PHONE: _____
CITY, STATE: _____ ZIP CODE: _____

CHECK TYPE OF SUBMITTAL:

____ DRAINAGE REPORT - RESUBMITTAL
____ DRAINAGE PLAN 1st SUBMITTAL
____ DRAINAGE PLAN RESUBMITTAL
____ CONCEPTUAL GRADING & DRAINAGE PLAN
____ GRADING PLAN
____ EROSION CONTROL PLAN
____ ENGINEER'S CERT (HYDROLOGY)
____ CLOMR\LOMR
_X_ TRAFFIC CIRCULTAION LAYOUT
____ ENGINEER/ARCHITECT CERT (TCL)
____ ENGINEER/ARCHITECT CERT (DRB S. P.)
____ ENGINEER/ARCHITECT CERT (AA)
____ OTHER (SPECIFY)

CHECK TYPE OF APPROVAL SOUGHT:

____ SIA / FINANCIAL GUARANTEE RELEASE
____ PRELIMINARY PLAT APPROVAL
____ S. DEV. PLAN FOR SUB'D. APPROVAL
____ S. DEV. PLAN FOR BLDG. PERMIT APPROVAL
____ SECTOR PLAN APPROVAL
____ FINAL PLAT APPROVAL
____ FOUNDATION PERMIT APPROVAL
____ BUILDING PERMIT APPROVAL
____ CERTIFICATE OF OCCUPANCY (PERM.)
____ CERTIFICATE OF OCCUPANCY (TEMP)
____ GRADING PERMIT APPROVAL
____ PAVING PERMIT APPROVAL
____ WORK ORDER APPROVAL
____ OTHER (SPECIFY) SO #19

RECEIVED
SEP 16 2010
HYDROLOGY SECTION

WAS A PRE-DESIGN CONFERENCE ATTENDED:

_____ YES
_x_ NO
_____ COPY PROVIDED

Submitted By: Nathan Burns DATE: 09/15/10

Requests for approvals of Site Development Plans and/or Subdivision Plats shall be accompanied by a drainage submittal. The particular nature, location and scope of the proposed development define the degree of drainage detail. One or more of the following levels of submittal may be required based on the following:

1. **Conceptual Grading and Drainage Plan:** Required for approval of Site Development Plans greater than five
2. **Drainage Plans**: Required for building permits, grading permits, paving permits and site plans less than five (5)
3. **Drainage Report:** Required for subdivisions containing more than ten (10) lots or constituting five (5) acres or more.

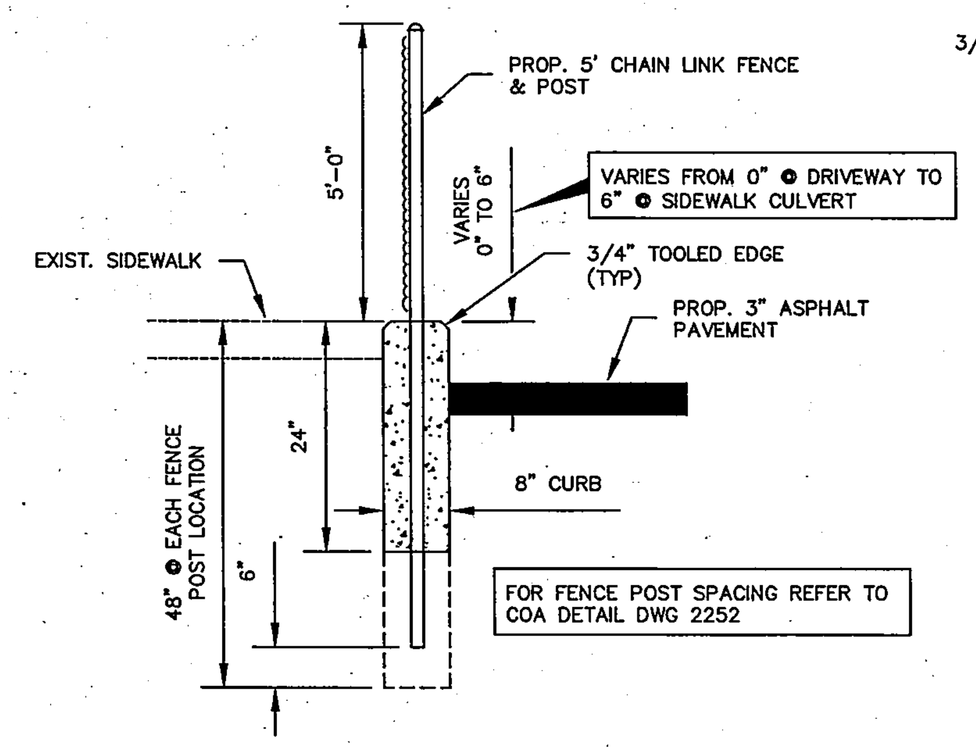

G6 TAPERED CURB DETAIL
SCALE: NTS

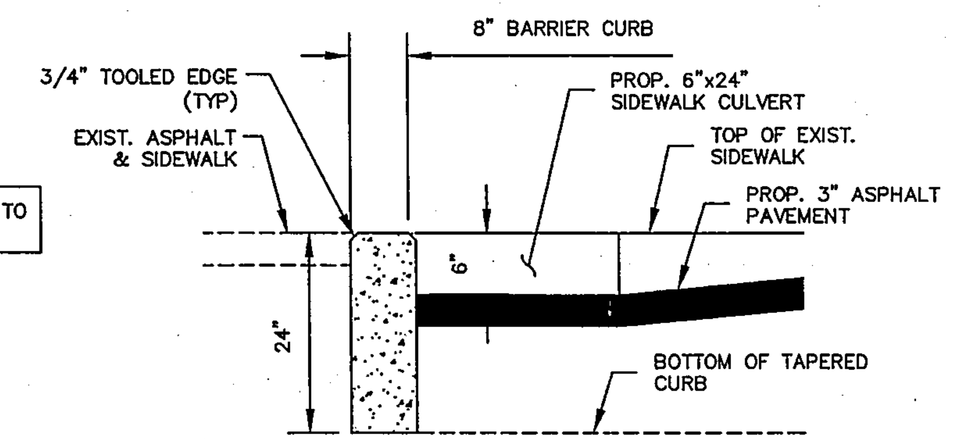

G9 BARRIER CURB DETAIL
SCALE: NTS

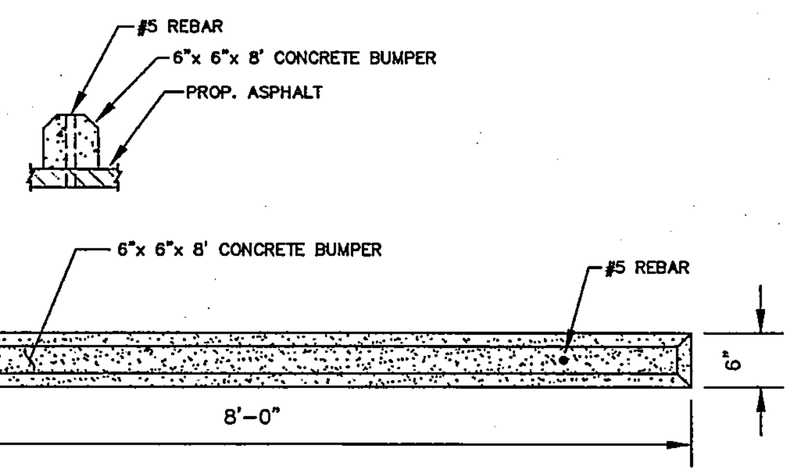

D2 WHEEL STOP DETAIL
SCALE: NTS

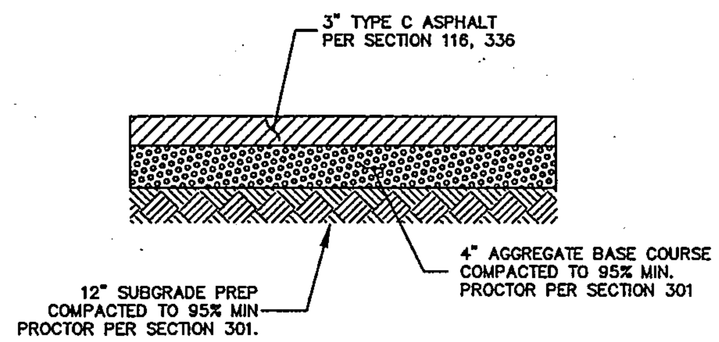

E9 3" ASPHALT SECTION
SCALE: NTS

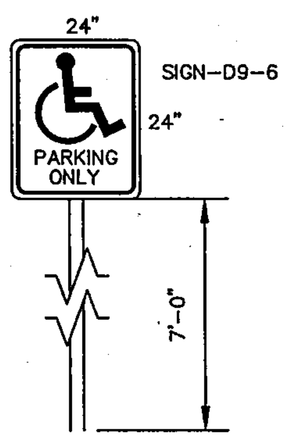

B2 HC SIGN DETAIL
SCALE: NTS

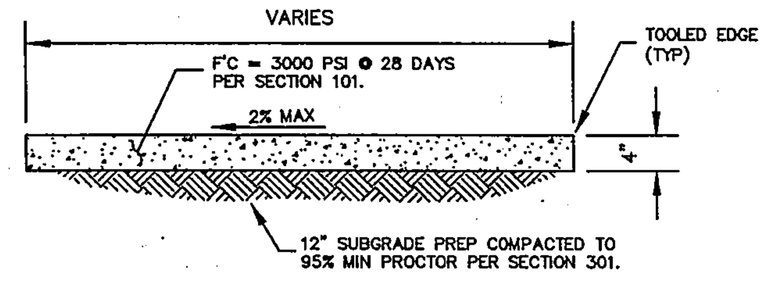

NOTE:
1. AS MUCH AS POSSIBLE SIDEWALK JOINTS SHALL MATCH CURB & GUTTER JOINT SPACING.
2. EXPANSION JOINTS TO BE INSTALLED AT 30' INTERVALS LONGITUDINALLY.
3. EXPANSION JOINTS SHALL BE INSTALLED BETWEEN NEW SIDEWALK AND EXISTING BUILDING, CURB & GUTTER, SIDEWALK, ETC.
4. EXPASION JOINTS TO INCLUDE BITUMINOUS EXPANSION BOARD, ZIPSTRIP, AND SIKA FLEX.

B9 4" PCC SIDEWALK
SCALE: NTS

WILSON & COMPANY
2600 THE AMERICAN RD. SE SUITE 100
RIO RANCHO, NM 87124
PHONE: 505-893-8021
FAX: 505-893-8001
www.wilsonco.com

CONSULTANTS

SEAL

PROJECT NAME
MANZANO HIGH SCHOOL
STAFF PARKING
PLAN

MARK	DATE	DESCRIPTION

PROJECT NO:
DESIGNED BY: JRW
DRAWN BY: JLF
CHECKED BY: JRW
DATE:
SHEET TITLE
DETAILS
SHEET NO:
C-501

RECEIVED
SEP 16 2010
HYDROLOGY SECTION

M:±IDS±10-600-054-00±CADD±SHEETS±05 DETAILS±10600054_DETAILS.dwg 9/9/2010 3:18:44 PM MDT

CITY OF ALBUQUERQUE

February 11, 2010

Jennifer M. Flor, P.E.
Wilson & Company, Inc.
2600 The American Road SE, Suite 100
Rio Rancho, NM 87124

Re: Manzano High School Ph 2 Improvements- Classrooms, Grading and Drainage Plan

Engineer's Stamp dated 2-10-10 (K22/D020)

Dear Ms. Flor,

Based upon the information provided in your submittal received 2-10-10, the above referenced plan is approved for Grading Permit and Paving Permit. However, this plan deviates from the approved Drainage Masterplan dated 1-13-09.

Upon completion of the project, please provide an as-built plan for our files.

If you have any questions, you can contact me at 924-3695.

Sincerely,

Curtis A. Cherne

Curtis A. Cherne, P.E.
Senior Engineer, Planning Dept.
Development and Building Services

C: file

PO Box 1293

Albuquerque

NM 87103

www.cabq.gov

DRAINAGE AND TRANSPORTATION INFORMATION SHEET

(REV. 12/05 - AP)

PROJECT TITLE: Manzano High School Storm Drain ZONE MAP/DRG. FILE#: ~~K-22-Z~~ K-22 / D020

DRB#: _____ EPC#: _____ WORK ORDER #: _____

LEGAL DESCRIPTION: See attached grading and drainage sheet

CITY ADDRESS: 12200 Lomas Blvd. NE, Albuquerque, NM 87112

ENGINEERING FIRM: Wilson & Company CONTACT: Jennifer Flor, PE
ADDRESS: 2600 The American Road SE, Ste 100 PHONE: 505-948-5129
CITY, STATE: Rio Rancho, NM ZIP CODE: 87124

OWNER: APS CONTACT: Tyler Mason
ADDRESS: 915 Oak Street PHONE: 505-848-8822
CITY, STATE: Albuqueruque New Mexico ZIP CODE: 87106

ARCHITECT: _____ CONTACT: _____
ADDRESS: _____ PHONE: _____
CITY, STATE: _____ ZIP CODE: _____

SURVEYING FIRM: Wilson & Company LICENSED SURVEYOR: Ben Aragon
ADDRESS: 4900 Lang Ave. NE PHONE: 505-348-4067
CITY, STATE: Albuquerque, NM ZIP CODE: 87109

CONTRACTOR: _____ CONTACT: _____
ADDRESS: _____ PHONE: _____
CITY, STATE: _____ ZIP CODE: _____

CHECK TYPE OF SUBMITTAL:

___ DRAINAGE REPORT - RESUBMITTAL
_X_ DRAINAGE PLAN 1st SUBMITTAL
___ DRAINAGE PLAN RESUBMITTAL
___ CONCEPTUAL GRADING & DRAINAGE PLAN
___ GRADING PLAN
___ EROSION CONTROL PLAN
___ ENGINEER'S CERT (HYDROLOGY)
___ CLOMR\LOMR
___ TRAFFIC CIRCULTAION LAYOUT
___ ENGINEER/ARCHITECT CERT (TCL)
___ ENGINEER/ARCHITECT CERT (DRB S. P.)
___ ENGINEER/ARCHITECT CERT (AA)
___ OTHER (SPECIFY)

CHECK TYPE OF APPROVAL SOUGHT:

___ SIA / FINANCIAL GUARANTEE RELEASE
___ PRELIMINARY PLAT APPROVAL
___ S. DEV. PLAN FOR SUB'D. APPROVAL
___ S. DEV. PLAN FOR BLDG. PERMIT APPROVAL
___ SECTOR PLAN APPROVAL
___ FINAL PLAT APPROVAL
___ FOUNDATION PERMIT APPROVAL
___ BUILDING PERMIT APPROVAL
___ CERTIFICATE OF OCCUPANCY (PERM.)
___ CERTIFICATE OF OCCUPANCY (TEMP)
_X_ GRADING PERMIT APPROVAL
_X_ PAVING PERMIT APPROVAL
___ WORK ORDER APPROVAL
_X_ OTHER (SPECIFY) G&D Plan approval

WAS A PRE-DESIGN CONFERENCE ATTENDED:

_____ YES
_X_ NO
_____ COPY PROVIDED

RECEIVED
FEB 10 2010
HYDROLOGY SECTION

Submitted By: Jennifer Flor DATE: 02/10/2010

Requests for approvals of Site Development Plans and/or Subdivision Plats shall be accompanied by a drainage submittal. The particular nature, location and scope of the proposed development define the degree of drainage detail. One or more of the following levels of submittal may be required based on the following:

1. **Conceptual Grading and Drainage Plan:** Required for approval of Site Development Plans greater than five
2. **Drainage Plans**: Required for building permits, grading permits, paving permits and site plans less than five (5)
3. **Drainage Report:** Required for subdivisions containing more than ten (10) lots or constituting five (5) acres or more.

CITY OF ALBUQUERQUE

January 14, 2010

Jason R. Woodruff, P.E.
Wilson & Company, Inc.
4900 Lang Ave. NE
Albuquerque, NM 87109

Re: Manzano High School A-Hall Improvement Plan, 12200 Lomas Blvd NE, Grading and Drainage Plan

Engineer's Stamp dated 12-29-09 (K22/D020)

Dear Mr. Woodruff,

Based upon the information provided in your submittal received 12-29-09, the above referenced plan is approved for Grading Permit, Paving Permit and SO 19 Permit.

A separate permit (SO 19) is required for construction within City ROW. A copy of this approval letter must be on hand when applying for the excavation/barricading permit. The sidewalk culvert in the City ROW must be inspected and accepted. Please contact Duane Schmitz, 235-8016, to schedule an inspection

Upon completion of the project, please provide an as-built plan for our files.

If you have any questions, you can contact me at 924-3695.

Sincerely,

Curtis A. Cherne

Curtis A. Cherne, P.E.
Senior Engineer, Planning Dept.
Development and Building Services

C: file
Antoinette Baldonado, Excavation and Barricading
Duane Schmitz, Street/Storm Drain Maintenance

PO Box 1293

Albuquerque

NM 87103

www.cabq.gov

DRAINAGE AND TRANSPORTATION INFORMATION SHEET

(REV. 12/05 - AP)

PROJECT TITLE: Manzano HS - DMP ZONE MAP/DRG. FILE#: K-22-Z / D020

DRB#: _____ EPC#: _____ WORK ORDER #: _____

LEGAL DESCRIPTION: SEE exhibits in attached Report

CITY ADDRESS: 12200 Lomas Blvd NE

ENGINEERING FIRM:	Wilson & Company	CONTACT:	Jason Woodruff, PE
ADDRESS:	4900 Lang Ave. NE	PHONE:	505-235-7250
CITY, STATE:	Albuqueruqe, NM	ZIP CODE:	87109
OWNER:	APS	CONTACT:	Tyler Mason
ADDRESS:	915 Oak Street	PHONE:	505-848-8822
CITY, STATE:	Albuqueruque New Mexico	ZIP CODE:	87106
ARCHITECT:	Wilson & Company	CONTACT:	See Engineer Above
ADDRESS:	4900 Lang Ave. NE	PHONE:	505-235-7250
CITY, STATE:	Albuquerque, NM	ZIP CODE:	
SURVEYING FIRM:	Wilson & Company	LICENSED SURVEYOR:	Ben Aragon
ADDRESS:	4900 Lang Ave. NE	PHONE:	505-348-4067
CITY, STATE:	Albuquerque, NM	ZIP CODE:	87109
CONTRACTOR:		CONTACT:	
ADDRESS:		PHONE:	
CITY, STATE:		ZIP CODE:	

CHECK TYPE OF SUBMITTAL:

___ DRAINAGE REPORT - RESUBMITTAL
_X_ DRAINAGE PLAN 1st SUBMITTAL
___ DRAINAGE PLAN RESUBMITTAL
___ CONCEPTUAL GRADING & DRAINAGE PLAN
_X_ GRADING PLAN
___ EROSION CONTROL PLAN
___ ENGINEER'S CERT (HYDROLOGY)
___ CLOMR\LOMR
___ TRAFFIC CIRCULTAION LAYOUT
___ ENGINEER/ARCHITECT CERT (TCL)
___ ENGINEER/ARCHITECT CERT (DRB S. P.)
___ ENGINEER/ARCHITECT CERT (AA)
___ OTHER (SPECIFY)

CHECK TYPE OF APPROVAL SOUGHT:

___ SIA / FINANCIAL GUARANTEE RELEASE
___ PRELIMINARY PLAT APPROVAL
___ S. DEV. PLAN FOR SUB'D. APPROVAL
___ S. DEV. PLAN FOR BLDG. PERMIT APPROVAL
___ SECTOR PLAN APPROVAL
___ FINAL PLAT APPROVAL
___ FOUNDATION PERMIT APPROVAL
___ BUILDING PERMIT APPROVAL
___ CERTIFICATE OF OCCUPANCY (PERM.)
___ CERTIFICATE OF OCCUPANCY (TEMP)
_X_ GRADING PERMIT APPROVAL
_X_ PAVING PERMIT APPROVAL
___ WORK ORDER APPROVAL
_X_ OTHER (SPECIFY) SO #19

RECEIVED
DEC 29 2009
HYDROLOGY SECTION

WAS A PRE-DESIGN CONFERENCE ATTENDED:

_____ YES
_x_ NO
_____ COPY PROVIDED

Submitted By: Jason Woodruff DATE: 12-29-09

Requests for approvals of Site Development Plans and/or Subdivision Plats shall be accompanied by a drainage submittal. The particular nature, location and scope of the proposed development define the degree of drainage detail. One or more of the following levels of submittal may be required based on the following:

1. **Conceptual Grading and Drainage Plan:** Required for approval of Site Development Plans greater than five
2. **Drainage Plans**: Required for building permits, grading permits, paving permits and site plans less than five (5)
3. **Drainage Report:** Required for subdivisions containing more than ten (10) lots or constituting five (5) acres or more.

CITY OF ALBUQUERQUE

April 1, 2009

Jason R. Woodruff, P.E.
Wilson & Company, Inc.
4900 Lang Ave. NE
Albuquerque, NM 87109

Re: Manzano High School Performance Arts ADA Access Grading and Drainage Plan

Engineer's Stamp dated 3-27-09 (K22/D020)

Dear Mr. Woodruff,

Based upon the information provided in your submittal received 3-27-09, the above referenced plan is approved for Grading Permit and Paving Permit.

Upon completion of the project, please provide an as-built plan for our files.

Basin 131 was not identified as a basin requiring improvement or shown in detail in the Master Plan stamp date 1-13-09.

If you have any questions, you can contact me at 924-3695.

Sincerely,

Curtis A. Cherne

Curtis A. Cherne, P.E.
Senior Engineer, Planning Dept.
Development and Building Services

C: file

PO Box 1293

Albuquerque

NM 87103

www.cabq.gov

DRAINAGE AND TRANSPORTATION INFORMATION SHEET

(REV 01/06 – KDM)

PROJECT TITLE: Manzano High School Site Improvements ZONE MAP: K-22/D020
DRB#: _____ EPC#: _____ WORK ORDER#: _____

LEGAL DESCRIPTION: See attached G&D for Legal
CITY ADDRESS: 12200 Lomas Blvd NE, Albuquerque, NM

ENGINEERING FIRM: Wilson & Company CONTACT: Jason Woodruff
ADDRESS: 4900 Lang Ave NE PHONE: (505) 235-7250
CITY, STATE: Albuquerque, NM ZIP CODE: 87109

OWNER: APS FACILITIES DESIGN & CONSTRUCTION CONTACT: Tyler Mason
ADDRESS: PO Box 6363 PHONE: (505) 848-8822
CITY, STATE: Albuquerque, NM ZIP CODE: 87106

ARCHITECT: _____ CONTACT: _____
ADDRESS: _____ PHONE: _____
CITY, STATE: _____ ZIP CODE: _____

SURVEYING FIRM: _____ LICENSED SURVEYOR: _____
ADDRESS: _____ PHONE: _____
CITY, STATE: _____ ZIP CODE: _____

PROFESSIONAL LICENSED SURVEYOR SIGNATURE **LICENSE NO.** **DATE**

CONTRACTOR: _____ CONTACT: _____
ADDRESS: _____ PHONE: _____
CITY, STATE: _____ ZIP CODE: _____

TYPE OF SUBMITTAL:

- ___ DRAINAGE REPORT
- X DRAINAGE PLAN 1st SUBMITTAL
- ___ DRAINAGE PLAN RESUBMITTAL
- ___ CONCEPTUAL G & D PLAN
- X GRADING PLAN
- ___ EROSION CONTROL PLAN
- ___ ENGINEER'S CERT (HYDROLOGY)
- ___ CLOMR/LOMR
- ___ TRAFFIC CIRCULATION LAYOUT
- ___ ENGINEER'S CERT (TCL)
- ___ ENGINEER'S CERT (DRB SITE PLAN)
- ___ OTHER-

CHECK TYPE OF APPROVAL SOUGHT:

- ___ SIA/FINANCIAL GUARANTEE RELEASE
- ___ PRELIMINARY PLAT APPROVAL
- ___ S. DEV. PLAN FOR SUB'D APPROVAL
- ___ S. DEV. FOR BLDG. PERMIT APPROVAL
- ___ SECTOR PLAN APPROVAL
- ___ FINAL PLAT APPROVAL
- ___ FOUNDATION PERMIT APPROVAL
- ___ BUILDING PERMIT APPROVAL
- ___ CERTIFICATE OF OCCUPANCY
- X GRADING PERMIT APPROVAL
- X PAVING PERMIT APPROVAL
- ___ WORK ORDER APPROVAL
- ___ OTHER (SPECIFY)

WAS A PRE-DESIGN CONFERENCE ATTENDED:

- ___ YES
- X NO
- ___ COPY PROVIDED

DATE SUBMITTED: 03/27/09 BY: J Woodruff

MAR 27 2009

Requests for approvals of Site Development Plans and/or Subdivision Plats shall be accompanied by a drainage submittal. The particular nature, location, and scope to the proposed development defines the degree of drainage detail. One or more of the following levels of submittal may be required based on the following:

1. **Conceptual Grading and Drainage Plan**: Required for approval of Site Development Plans greater than five (5) acres and Sector Plans.
2. **Drainage Plans**: Required for building permits, grading permits, paving permits and site plans less than five (5) acres.
3. **Drainage Report**: Required for subdivision containing more than ten (10) lots or constituting five (5) acres or more.

DRAINAGE MASTER PLAN

For

Manzano High School
Albuquerque, New Mexico

December 2008

Prepared for:
APS Facilities Planning & Construction

Prepared by:

WILSON
&COMPANY
ENGINEERS & ARCHITECTS
Wilson & Company, Inc.
4900 Lang Avenue NE
Albuquerque, New Mexico 87109
(505) 348-4000
(505) 348-4072

DEC 23 2008

WCI Project No. 086-000-55-00

WILSON
&COMPANY

Drainage Master Plan

For

Manzano HS

Albuquerque, New Mexico

December 2008

Prepared for:
APS Facilities Planning & Construction

Prepared by:
Wilson & Company Inc., Engineers & Architects
4900 Lang Avenue NE
Albuquerque, New Mexico 87109

WCI Project No. 086-000-55-00

I. LOCATION

Manzano High School is located at 12200 Lomas Blvd NE in Albuquerque New Mexico and is bounded to the West by commercial and residential developments, Lomas Blvd to the North, Wilson Stadium to the East, and residential developments to the South. The site has an area of ~61 acres including Wilson Stadium. All applicable ordinances of the DPM and AHYMO were utilized to prepare this plan.

II. DRAINAGE DESIGN CRITERIA

The design criteria used in this report was in accordance with Section 22.2 of the City of Albuquerque Development Process Manual (DPM). AHYMO was used to model the 100-year, 6-hour storm event to determine the peak runoff using P (1 hr) = 2.23, P (6 hr) = 2.90 and P (24 hr) = 3.65 obtained from the Table A-2 page 22-8 of DPM. AHYMO was also use to model the 100-year, 24-hour storm event to determine the total volumetric storage required for the detention pond. The onsite Land Treatment values varied depending on the basin. The site is located in Zone 4 as designated in Table A-1. Copies of the original AHYMO output files are located in Appendix A at the end of this report.

III. EXISTING CONDITIONS

SOILS AND FIRM

The Soil Survey of Bernalillo County Area, New Mexico designates the underlying soil as Embudo Tijeras Complex and Tijeras gravelly fine sandy loam. Embudo Tijeras Complex is described as well drained with a depth more than 60 inches, Tijeras is gravelly fine sandy loam from 0 to 6 inches. The site is located in Zone Atlas K-22-Z. Manzano is located in FIRM panel 0359G zone X (areas determined to be outside the 0.2% annual chance flood with average depths of less that 1% annual chance flood, map number 35001C0359G.)

DRAINAGE

The existing topography slopes NE to SW with a wide range of slopes. The majority of the school property is fully developed with small portions of the campus along the southern boundary left available for expansion. Runoff generated on site is primarily addressed via a series of storm drains and two drainage ponds. However, a significant portion of the site still directly discharges to adjacent properties and right-of-way. Run-off generated along the northern boundary of the site (Basins 101 and 130) discharge into the Lomas Blvd right-or-way and are ultimately intercepted by the existing storm drain inlets near the intersection of Lomas and Juan Tabo.

Portions of the Wilson Stadium Parking lot (Basin 102) discharge directly into the Chelwood Park Blvd right-of-way and are conveyed via street flow to the south along Chelwood. The street flows adjacent to the southeast corner of the project site and contained within the existing street and intercepted by an existing storm drain located immediately south of the access drive off Chelwood Park.

Finally, the southern third (~18 acres) of the project site drains into an access road skirting the southern boundary of the campus. The majority of this area is comprised of athletic fields and bare ground. However, it is suspected that runoff originating from Wilson stadium and the surrounding areas are reaching the athletic field in Basin 113 and ultimately draining to the southwest corner of the site. The easternmost pond, Pond 1, intercepting flows from Basins 103-107 is malfunctioning and prematurely releasing its captured flows into the adjacent field.

Pond 1 is a small detention pond located just west of Wilson Stadium. It currently captures flows originating from Wilson Stadium, the stadium parking lot, as well as eastern portions of the Manzano HS campus. There is an outlet for Pond 1, but it is suspected of being connected to a small dry-well SW of the pond which also receives flows from the adjacent athletic field. Since Pond 1 is perched above the adjacent athletic field, discharge from the existing pond outlet backwaters thru the dry well, up an existing storm drain, and thru existing inlets on to the field. This suspicion is based on the fact that during a recent storm event, Pond 1 was empty while the adjacent athletic field was flooded. An exploration of the pond 1 outfall will help explain the actual conditions in the field and assist in determining the actual peak discharge rate from the

pond. If the pond is in fact malfunctioning, the total design volume released into the adjacent athletic field will be approximately 2.2 acft with a maximum possible discharge rate of ~46 cfs.

Fix this first? flooding of neighboring properties and Juan Tabo blvd

Run-off generated in the southern area (Basins 110, 113, & 114) is approximately 66 cfs and is conveyed to the southwest corner of the campus to an existing 9-grate type "D" inlet via the access road. The access road has insufficient carrying capacity for the existing flows which results in the inundation of adjacent areas during the design storm. As flows reach the custom inlet at the southwest corner of the campus, another issue arises. The outfall from the existing inlet is a 15" storm drain which conveys flows into the Juan Tabo drainage facility. The runoff entering the inlet soon overwhelms the storm drain downstream, resulting in the inundation of the inlet and flooding across the residential property immediately downstream of the campus.

Pond 2 is a joint use facility which also acts as a soccer field and is located in the southwest corner of the campus. Pond 2 intercepts flows mainly originating from the central and western portions of the campus. Within the pond is an 18" diameter storm drain which discharges to the existing custom inlet and 15" diameter storm drain mentioned above. Flows leaving Pond 2 are controlled by an existing 11" orifice plate. The orifice plate is located in an area inlet at the SW corner of pond 2. The allowable discharge rate established for Pond 2 in the Drainage Master Plan by Jeff Mortensen & Associates, LLC (1993) of 11.0 CFS was based on the estimated carrying capacity of the 15" diameter storm drain downstream. Due to the limited discharge allowed by the existing outfall, and the inlet inundation caused by runoff originating from Basins 110, 113 & 114,pond 2 has insufficient volume. During the design storm event, pond 2 will spill into the adjacent drainage easement SW of the site. Ultimately, this runoff will discharge into Juan Tabo via sheet flow through the adjacent residential development.

The central portion of the project site (Basins 112, 120, 121 & 122) predominantly discharges into pond 2 via a series of storm drain systems. Unfortunately, the existing storm drain systems are inadequate due to the fact that they fail to intercept the existing runoff or are too small to convey the necessary flows. During the summer of 2008, flooding occurred on campus resulting in damages to the following buildings:

- Main Gym
- The Lobbies
- The Spirit Room
- Classroom Wings

The flooding which occurred this past summer seemed to draw runoff from several onsite basins and concentrate them outside the main gym. The following is a brief explanation of how each basin contributed to the flooding:

Basin 120

Basin 120 is primarily intended to drain into an existing storm drain system which ultimately discharges into pond 2 via a series of roof drains and inlets in the courtyards. The existing storm drain line is a 6" diameter line and will not carry the design flows for the basin. During the recent storm event that resulted in the flooding over the summer, runoff inundated the existing storm drain system for the classroom wings and back flowed through the new addition to the west. This runoff then passed west to a point adjacent to the main gym, further aggravating a similar problem in this area.

Basin 121

Basin 121 produces runoff which drains to the west and ultimately to the sumps on either side of the Spirit Room adjacent to the main gym. Existing inlets meant to capture the runoff were too few and some were improperly placed. Sheet flows were generally intercepted by an existing decorative wall and directed towards the two sumps. Another issue came up with the existing storm water lift station located immediately north of the Spirit Room. Apparently the pump never came on during the recent flooding.

Basin 122

Basin 122 generated runoff which aggravated the flooding over the summer, but nothing extraordinary seems to have taken place in this basin other than it was the location of a portion of the flooding.

Plate 1 in Appendix B delineates the existing basin boundaries. Establishment of the basin boundaries are based on a topographic survey and field verification. The site has a total area of ~61 acres. The existing peak discharges and volumes associated with the various basins are as follows:

Table 1- Existing Conditions for Manzano High School

Basin	Area	Peak Discharge	Runoff Volume
ID	(acres)	100yr-6hr (ft^3/sec)	100yr-24hr (acre-ft)
101	5.99	31.54	1.63
102	2.27	11.75	0.61
103	6.12	23.40	1.05
104	1.97	9.73	0.49
105	1.90	9.64	0.49
106	0.39	1.99	0.10
107	0.58	1.66	0.06
110	5.78	28.87	1.46
111	0.33	1.69	0.09
112	1.11	5.55	0.28
113	6.75	21.25	0.80
114	5.54	17.58	0.63
115	4.37	12.11	0.42
120	2.73	14.12	0.72
121	2.10	10.60	0.54
122	1.07	5.71	0.30
123	3.44	17.73	0.91
124	6.22	31.11	1.57
130	1.35	6.60	0.33
131	1.35	6.75	0.34
132	1.24	6.11	0.31

IV. PROPOSED CONDITIONS

The current drainage issues within the Manzano HS campus are fairly significant. The following paragraphs outline the conceptual designs for the four separate Phases of the proposed drainage improvements.

Phase 1

Phase I drainage improvements will include the expansion of the existing storm drain system currently conveying flows originating from Basins 112, 120, 121, 122 and 123. Specifically, a new storm drain will be installed from Pond 2 to the existing sump just north of the Spirit Building. Also included in Phase 1 will be the expansion of the existing storm drain system running north-south, just east of K-Building. Specific storm drain configuration and sizes are outlined in Plate 2, Appendix B.

Phase 2

Phase 2 drainage improvements will address the inadequacy of the existing storm drain servicing the Classroom Wings in Basin 120. The existing 6" diameter storm drain will be replaced with a 24" diameter storm drain and discharge as it currently does, to the main storm drain leading to Pond 2. Specific storm drain configuration and sizes are outlined in Plate 3, Appendix B.

Phase 3

Phase 3 drainage improvements will address inadequacies associated with Pond 1 and the runoff associated with Basins 103, 104, 105, 106, 107, 110, 113 and 114. Improvements include a new storm drain stretching from a point near the SE corner of the Music Building to a proposed pond south of the existing baseball field. Specific storm drain configuration and sizes are outlined in Plate 4, Appendix B.

Phase 4

assumes capacity in Juan Tabo SD indate = 1962
and agreement by property owners to the west
box culvert 2(7x10) h... indate = 200[illegible]

Phase 4 drainage improvements will include the replacement of the existing outfall (15" SD) passing from the southwest corner of the campus to a point in Juan Tabo. Approval for such improvements will be dependant on the existence of a drainage easement along the proposed alignment and/or the cooperation of the adjacent property owner. Specific storm drain configuration and sizes are outlined in Plate 5, Appendix B.

V. CONCLUSIONS

Manzano High School has recently experience significant flooding onsite and is directly upstream of several locations which are experiencing similar situations. It is in the best interest of the school, the adjacent property owners, and the City of Albuquerque to have the before mentioned drainage improvements addressed in the near future. Phase 1 is currently scheduled to be in construction in the spring of 2009. It is recommended that the other three Phases outlined in this report be addressed as soon as financially possible.

```
    AHYMO PROGRAM SUMMARY TABLE (AHYMO_97) -                    - VERSION:  1997.02c      RUN DATE
(MON/DAY/YR) =12/12/2008
    INPUT FILE = 106.hmi                                                                  USER NO.=
AHYMO-C-9803c01UNMLIB-AH

                                   FROM  TO                      PEAK        RUNOFF                TIME TO    CFS
 PAGE =   1
                      HYDROGRAPH   ID    ID        AREA     DISCHARGE     VOLUME     RUNOFF     PEAK      PER
    COMMAND        IDENTIFICATION  NO.   NO.     (SQ MI)     (CFS)       (AC-FT)   (INCHES)  (HOURS)    ACRE
 NOTATION

    *S    AHYMO_97 MODEL FOR: Manzano HS
    *S    PREPARED FOR:  APS
    *S    PREPARED BY:  Wilson & Co
    *S    REVISED:  12/12/08 JRW
    *S    MODEL DESCRIPTION -
    *S 1. 10-YEAR 6-HOUR RAINFALL EVENT
    *S 2. THIS MODEL ASSUMES DEVELOPED CONDITIONS
    *S
    START
TIME=       .00
    LOCATION                        ALBUQUERQUE
    *S***** AHYMO - 106.HMI
    *S***** OCTOBER 20, 2008
    *S***** HYDROLOGY FOR McCollum EXISTING ONSITE
    RAINFALL  TYPE= 1
RAIN6=    1.930
    *S***** BASIN 101 - ONSITE EXISTING (5.99 ACRES)
    COMPUTE NM HYD        101.00   -     1        .00940        20.98        .842      1.67976    1.499    3.488
PER IMP= 100.00
    *S***** BASIN 102 - ONSITE EXISTING (2.27 ACRES)
    COMPUTE NM HYD        102.00   -     2        .00350         7.82        .314      1.67976    1.499    3.490
PER IMP= 100.00
    *S***** BASIN 103 - ONSITE EXISTING (6.12 ACRES)
    COMPUTE NM HYD        103.00   -     3        .00956        13.61        .509       .99836    1.499    2.224
PER IMP=  50.00
    *S***** BASIN 104 - ONSITE EXISTING (1.97 ACRES)
    COMPUTE NM HYD        104.00   -     4        .00310         6.32        .247      1.49483    1.499    3.184
PER IMP=  85.00
    *S***** BASIN 105 - ONSITE EXISTING (1.90 ACRES)
    COMPUTE NM HYD        105.00   -     5        .00300         6.31        .249      1.55647    1.499    3.287
PER IMP=  90.00
    *S***** BASIN 106 - ONSITE EXISTING (0.39 ACRES)
    COMPUTE NM HYD        106.00   -     6        .00060         1.31        .052      1.61812    1.499    3.413
```

```
PER IMP=  95.00
    *S***** BASIN 107 - ONSITE EXISTING (0.58 ACRES)
    COMPUTE NM HYD        107.00   -    7        .00090        .79        .024       .49371    1.499    1.375
PER IMP=  10.00
    *S***** BASIN 110 - ONSITE EXISTING (5.78 ACRES)
    COMPUTE NM HYD        110.00   -   10        .00900      18.91        .747      1.55647    1.499    3.283
PER IMP=  90.00
    *S***** BASIN 111 - ONSITE EXISTING (0.33 ACRES)
    COMPUTE NM HYD        111.00   -   11        .00051       1.11        .044      1.61812    1.499    3.416
PER IMP=  95.00
    *S***** BASIN 112 - ONSITE EXISTING (1.11 ACRES)
    COMPUTE NM HYD        112.00   -   12        .00170       3.65        .144      1.59346    1.499    3.353
PER IMP=  93.00
    *S***** BASIN 113 - ONSITE EXISTING (6.75 ACRES)
    COMPUTE NM HYD        113.00   -   13        .01050      10.96        .356       .63556    1.499    1.631
PER IMP=  20.00
    *S***** BASIN 114 - ONSITE EXISTING (5.54 ACRES)
    COMPUTE NM HYD        114.00   -   14        .00870       9.04        .279       .60166    1.499    1.623
PER IMP=  15.00
    *S***** BASIN 115 - ONSITE EXISTING (4.37 ACRES)
    COMPUTE NM HYD        115.00   -   15        .00680       5.62        .173       .47565    1.499    1.291
PER IMP=  10.00
    *S***** BASIN 120 - ONSITE EXISTING (2.73 ACRES)
    COMPUTE NM HYD        120.00   -   20        .00430       9.32        .371      1.61812    1.499    3.388
PER IMP=  95.00
    *S***** BASIN 121 - ONSITE EXISTING (2.10 ACRES)
    COMPUTE NM HYD        121.00   -   21        .00330       6.94        .274      1.55647    1.499    3.286
PER IMP=  90.00
    *S***** BASIN 122 - ONSITE EXISTING (1.07 ACRES)
    COMPUTE NM HYD        122.00   -   22        .00170       3.80        .152      1.67976    1.499    3.493
PER IMP= 100.00
    *S***** BASIN 123 - ONSITE EXISTING (3.44 ACRES)
    COMPUTE NM HYD        123.00   -   23        .00540      11.71        .466      1.61812    1.499    3.387
PER IMP=  95.00
    *S***** BASIN 124 - ONSITE EXISTING (6.22 ACRES)
```


COMMAND NOTATION	HYDROGRAPH IDENTIFICATION	FROM ID NO.	TO ID NO.	AREA (SQ MI)	PEAK DISCHARGE (CFS)	RUNOFF VOLUME (AC-FT)	RUNOFF (INCHES)	TIME TO PEAK (HOURS)	CFS PER ACRE
COMPUTE NM HYD	124.00	-	24	.00970	20.38	.805	1.55647	1.499	3.282

PER IMP= 90.00

```
    *S***** BASIN 130 - ONSITE EXISTING (1.35 ACRES)
    COMPUTE NM HYD        130.00   -    30        .00210        4.28        .167      1.49483    1.499    3.186
PER IMP=  85.00
    *S***** BASIN 131 - ONSITE EXISTING (1.35 ACRES)
    COMPUTE NM HYD        131.00   -    31        .00210        4.42        .174      1.55647    1.499    3.289
PER IMP=  90.00
    *S***** BASIN 132 - OFFSITE EXISTING (1.24 ACRES)
    COMPUTE NM HYD        131.00   -    32        .00190        4.00        .158      1.55647    1.499    3.291
PER IMP=  90.00
    ADD HYD               200.00  3& 4  40        .01266       19.92        .756      1.11988    1.499    2.459
    ADD HYD               201.00 40& 5  41        .01566       26.23       1.005      1.20350    1.499    2.618
    ADD HYD               202.00 41& 6  42        .01626       27.54       1.057      1.21879    1.499    2.647
    ADD HYD               203.00 42& 7  43        .01716       28.34       1.081      1.18075    1.499    2.580
    *SEXISTING POND 1 - ADJACENT TO WILSON STADIUM
    ADD HYD               300.00 11&12  50        .00221        4.76        .188      1.59889    1.499    3.368
    ADD HYD               301.00 50&13  51        .01271       15.73        .544       .80304    1.499    1.933
    ADD HYD               302.00 51&14  52        .02141       24.76        .824       .72120    1.499    1.807
    ADD HYD               303.00 52&10  53        .03041       43.67       1.571       .96839    1.499    2.244
    ADD HYD               400.00 20&21  60        .00760       16.26        .645      1.59127    1.499    3.344
    ADD HYD               401.00 60&22  61        .00930       20.07        .797      1.60742    1.499    3.371
    ADD HYD               402.00 61&23  62        .01470       31.77       1.263      1.61133    1.499    3.377
    ADD HYD               500.00 24&15  70        .01650       25.99        .978      1.11101    1.499    2.462
    ADD HYD               600.00 70&62  80        .03120       57.77       2.241      1.34674    1.499    2.893
    ADD HYD               601.00 80&53  81        .06161      101.44       3.812      1.15999    1.499    2.573
    *SEXISTING POND 2 - SOCCER FIELD
    ROUTE RESERVOIR       700.00   80   82        .03120        7.76       2.241      1.34674    2.131     .389
AC-FT=    1.352
    FINISH
```

AHYMO PROGRAM SUMMARY TABLE (AHYMO_97) - - VERSION: 1997.02c RUN DATE (MON/DAY/YR) =12/12/2008 USER NO.=
INPUT FILE = 1006.hmi
AHYMO-C-9803c01UNMLIB-AH

COMMAND	HYDROGRAPH IDENTIFICATION	FROM ID NO.	TO ID NO.	AREA (SQ MI)	PEAK DISCHARGE (CFS)	RUNOFF VOLUME (AC-FT)	RUNOFF (INCHES)	TIME TO PEAK (HOURS)	CFS PER ACRE
PAGE = 1									
*S AHYMO_97 MODEL FOR: Manzano HS									
*S PREPARED FOR: APS									
*S PREPARED BY: Wilson & Co									
*S REVISED: 12/12/08 JRW									
*S MODEL DESCRIPTION -									
*S 1. 100-YEAR 6-HOUR RAINFALL EVENT									
*S 2. THIS MODEL ASSUMES DEVELOPED CONDITIONS									
*S									
START									
TIME= .00									
LOCATION	ALBUQUERQUE								
*S***** AHYMO - 1006.HMI									
*S***** OCTOBER 20, 2008									
*S***** HYDROLOGY FOR McCollum EXISTING ONSITE									
RAINFALL TYPE= 1									
RAIN6= 2.900									
*S***** BASIN 101 - ONSITE EXISTING (5.99 ACRES)									
COMPUTE NM HYD	101.00	-	1	.00940	31.54	1.324	2.64117	1.499	5.242
PER IMP= 100.00									
*S***** BASIN 102 - ONSITE EXISTING (2.27 ACRES)									
COMPUTE NM HYD	102.00	-	2	.00350	11.75	.493	2.64117	1.499	5.245
PER IMP= 100.00									
*S***** BASIN 103 - ONSITE EXISTING (6.12 ACRES)									
COMPUTE NM HYD	103.00	-	3	.00956	23.40	.896	1.75685	1.499	3.825
PER IMP= 50.00									
*S***** BASIN 104 - ONSITE EXISTING (1.97 ACRES)									
COMPUTE NM HYD	104.00	-	4	.00310	9.73	.398	2.40640	1.499	4.903
PER IMP= 85.00									
*S***** BASIN 105 - ONSITE EXISTING (1.90 ACRES)									
COMPUTE NM HYD	105.00	-	5	.00300	9.64	.398	2.48466	1.499	5.020
PER IMP= 90.00									
*S***** BASIN 106 - ONSITE EXISTING (0.39 ACRES)									
COMPUTE NM HYD	106.00	-	6	.00060	1.99	.082	2.56291	1.499	5.173
PER IMP= 95.00									
*S***** BASIN 107 - ONSITE EXISTING (0.58 ACRES)									
COMPUTE NM HYD	107.00	-	7	.00090	1.66	.053	1.11250	1.499	

2.887 PER IMP= 10.00
*S***** BASIN 110 - ONSITE EXISTING (5.78 ACRES)
COMPUTE NM HYD 110.00 - 10 .00900 28.87 1.193 2.48466 1.499
5.012 PER IMP= 90.00
*S***** BASIN 111 - ONSITE EXISTING (0.33 ACRES)
COMPUTE NM HYD 111.00 - 11 .00051 1.69 .070 2.56291 1.499
5.178 PER IMP= 95.00
*S***** BASIN 112 - ONSITE EXISTING (1.11 ACRES)
COMPUTE NM HYD 112.00 - 12 .00170 5.55 .230 2.53161 1.499
5.098 PER IMP= 93.00
*S***** BASIN 113 - ONSITE EXISTING (6.75 ACRES)
COMPUTE NM HYD 113.00 - 13 .01050 21.25 .727 1.29847 1.499
3.162 PER IMP= 20.00
*S***** BASIN 114 - ONSITE EXISTING (5.54 ACRES)
COMPUTE NM HYD 114.00 - 14 .00870 17.58 .587 1.26442 1.499
3.158 PER IMP= 15.00
*S***** BASIN 115 - ONSITE EXISTING (4.37 ACRES)
COMPUTE NM HYD 115.00 - 15 .00680 12.11 .393 1.08440 1.499
2.783 PER IMP= 10.00
*S***** BASIN 120 - ONSITE EXISTING (2.73 ACRES)
COMPUTE NM HYD 120.00 - 20 .00430 14.12 .588 2.56291 1.499
5.132 PER IMP= 95.00
*S***** BASIN 121 - ONSITE EXISTING (2.10 ACRES)
COMPUTE NM HYD 121.00 - 21 .00330 10.60 .437 2.48466 1.499
5.018 PER IMP= 90.00
*S***** BASIN 122 - ONSITE EXISTING (1.07 ACRES)
COMPUTE NM HYD 122.00 - 22 .00170 5.71 .239 2.64117 1.499
5.250 PER IMP= 100.00
*S***** BASIN 123 - ONSITE EXISTING (3.44 ACRES)
COMPUTE NM HYD 123.00 - 23 .00540 17.73 .738 2.56291 1.499
5.131 PER IMP= 95.00
*S***** BASIN 124 - ONSITE EXISTING (6.22 ACRES)

COMMAND	HYDROGRAPH IDENTIFICATION	FROM ID NO.	TO ID NO.	AREA (SQ MI)	PEAK DISCHARGE (CFS)	RUNOFF VOLUME (AC-FT)	RUNOFF (INCHES)	TIME TO PEAK (HOURS)
COMPUTE NM HYD	124.00	-	24	.00970	31.11	1.285	2.48466	1.499

CFS PAGE = 2 PER ACRE NOTATION

5.012 PER IMP= 90.00
*S***** BASIN 130 - ONSITE EXISTING (1.35 ACRES)
COMPUTE NM HYD 130.00 - 30 .00210 6.60 .270 2.40640 1.499
4.907 PER IMP= 85.00
*S***** BASIN 131 - ONSITE EXISTING (1.35 ACRES)
COMPUTE NM HYD 131.00 - 31 .00210 6.75 .278 2.48466 1.499
5.024 PER IMP= 90.00

```
                                                    1006
    *S***** BASIN 132 - OFFSITE EXISTING (1.24 ACRES)
    COMPUTE NM HYD          131.00   -    32        .00190          6.11        .252      2.48466    1.499
5.026 PER IMP=  90.00
    ADD HYD                 200.00  3& 4  40        .01266         33.13       1.294      1.91586    1.499
4.089
    ADD HYD                 201.00 40& 5  41        .01566         42.77       1.691      2.02481    1.499
4.267
    ADD HYD                 202.00 41& 6  42        .01626         44.75       1.773      2.04465    1.499
4.300
    ADD HYD                 203.00 42& 7  43        .01716         46.42       1.827      1.99575    1.499
4.226
    *SEXISTING POND 1 - ADJACENT TO WILSON STADIUM
    ADD HYD                 300.00 11&12  50        .00221          7.24        .299      2.53861    1.499
5.116
    ADD HYD                 301.00 50&13  51        .01271         28.48       1.026      1.51409    1.499
3.502
    ADD HYD                 302.00 51&14  52        .02141         46.07       1.613      1.41262    1.499
3.362
    ADD HYD                 303.00 52&10  53        .03041         74.94       2.806      1.72989    1.499
3.850
    ADD HYD                 400.00 20&21  60        .00760         24.72       1.025      2.52887    1.499
5.083
    ADD HYD                 401.00 60&22  61        .00930         30.44       1.264      2.54937    1.499
5.113
    ADD HYD                 402.00 61&23  62        .01470         48.17       2.003      2.55433    1.499
5.120
    ADD HYD                 500.00 24&15  70        .01650         43.22       1.679      1.90755    1.499
4.093
    ADD HYD                 600.00 70&62  80        .03120         91.39       3.681      2.21228    1.499
4.577
    ADD HYD                 601.00 80&53  81        .06161        166.33       6.487      1.97418    1.499
4.218
    *SEXISTING POND 2 - SOCCER FIELD
    ROUTE RESERVOIR         700.00   80   82        .03120          8.28       3.681      2.21228    2.198
.415 AC-FT=    2.439
    FINISH
```

```
    AHYMO PROGRAM SUMMARY TABLE (AHYMO_97) -                    - VERSION:  1997.02c      RUN DATE
(MON/DAY/YR) =12/05/2008
    INPUT FILE = 10024.HMI                                                                USER NO.=
AHYMO-C-9803c01UNMLIB-AH

                                   FROM  TO                    PEAK        RUNOFF                TIME TO    CFS
 PAGE =   1
                     HYDROGRAPH    ID    ID        AREA     DISCHARGE     VOLUME      RUNOFF      PEAK      PER
    COMMAND        IDENTIFICATION  NO.   NO.     (SQ MI)     (CFS)       (AC-FT)    (INCHES)   (HOURS)    ACRE
 NOTATION

    *S     AHYMO_97 MODEL FOR: Manzano HS
    *S     PREPARED FOR:  APS
    *S     PREPARED BY:  Wilson & Co
    *S     REVISED:  12/05/08 JRW
    *S     MODEL DESCRIPTION -
    *S 1. 100-YEAR 24-HOUR RAINFALL EVENT
    *S 2. THIS MODEL ASSUMES DEVELOPED CONDITIONS
    *S
    START
TIME=        .00
    LOCATION                        ALBUQUERQUE
    *S***** AHYMO - 10024.HMI
    *S***** OCTOBER 20, 2008
    *S***** HYDROLOGY FOR McCollum EXISTING ONSITE
    RAINFALL  TYPE= 2
RAIN24=   3.650
    *S***** BASIN 101 - ONSITE EXISTING (5.99 ACRES)
    COMPUTE NM HYD        101.00   -     1        .00940        31.54       1.634      3.25880    1.499     5.242
PER IMP= 100.00
    *S***** BASIN 102 - ONSITE EXISTING (2.27 ACRES)
    COMPUTE NM HYD        102.00   -     2        .00350        11.75        .608      3.25882    1.499     5.245
PER IMP= 100.00
    *S***** BASIN 103 - ONSITE EXISTING (6.12 ACRES)
    COMPUTE NM HYD        103.00   -     3        .00956        23.40       1.053      2.06567    1.499     3.825
PER IMP=  50.00
    *S***** BASIN 104 - ONSITE EXISTING (1.97 ACRES)
    COMPUTE NM HYD        104.00   -     4        .00310         9.73        .485      2.93142    1.499     4.903
PER IMP=  85.00
    *S***** BASIN 105 - ONSITE EXISTING (1.90 ACRES)
    COMPUTE NM HYD        105.00   -     5        .00300         9.64        .486      3.04056    1.499     5.020
PER IMP=  90.00
    *S***** BASIN 106 - ONSITE EXISTING (0.39 ACRES)
    COMPUTE NM HYD        106.00   -     6        .00060         1.99        .101      3.14982    1.499     5.173
```

```
PER IMP=  95.00
    *S***** BASIN 107 - ONSITE EXISTING (0.58 ACRES)
    COMPUTE NM HYD        107.00   -     7        .00090        1.66        .056      1.17434    1.499    2.887
PER IMP=  10.00
    *S***** BASIN 110 - ONSITE EXISTING (5.78 ACRES)
    COMPUTE NM HYD        110.00   -    10        .00900       28.87       1.459      3.04053    1.499    5.012
PER IMP=  90.00
    *S***** BASIN 111 - ONSITE EXISTING (0.33 ACRES)
    COMPUTE NM HYD        111.00   -    11        .00051        1.69        .086      3.14985    1.499    5.178
PER IMP=  95.00
    *S***** BASIN 112 - ONSITE EXISTING (1.11 ACRES)
    COMPUTE NM HYD        112.00   -    12        .00170        5.55        .282      3.10606    1.499    5.098
PER IMP=  93.00
    *S***** BASIN 113 - ONSITE EXISTING (6.75 ACRES)
    COMPUTE NM HYD        113.00   -    13        .01050       21.25        .796      1.42201    1.499    3.162
PER IMP=  20.00
    *S***** BASIN 114 - ONSITE EXISTING (5.54 ACRES)
    COMPUTE NM HYD        114.00   -    14        .00870       17.58        .630      1.35708    1.499    3.158
PER IMP=  15.00
    *S***** BASIN 115 - ONSITE EXISTING (4.37 ACRES)
    COMPUTE NM HYD        115.00   -    15        .00680       12.11        .416      1.14618    1.499    2.783
PER IMP=  10.00
    *S***** BASIN 120 - ONSITE EXISTING (2.73 ACRES)
    COMPUTE NM HYD        120.00   -    20        .00430       14.12        .722      3.14968    1.499    5.132
PER IMP=  95.00
    *S***** BASIN 121 - ONSITE EXISTING (2.10 ACRES)
    COMPUTE NM HYD        121.00   -    21        .00330       10.60        .535      3.04055    1.499    5.018
PER IMP=  90.00
    *S***** BASIN 122 - ONSITE EXISTING (1.07 ACRES)
    COMPUTE NM HYD        122.00   -    22        .00170        5.71        .295      3.25886    1.499    5.250
PER IMP= 100.00
    *S***** BASIN 123 - ONSITE EXISTING (3.44 ACRES)
    COMPUTE NM HYD        123.00   -    23        .00540       17.73        .907      3.14967    1.499    5.131
PER IMP=  95.00
    *S***** BASIN 124 - ONSITE EXISTING (6.22 ACRES)
```


COMMAND NOTATION	HYDROGRAPH IDENTIFICATION	FROM ID NO.	TO ID NO.	AREA (SQ MI)	PEAK DISCHARGE (CFS)	RUNOFF VOLUME (AC-FT)	RUNOFF (INCHES)	TIME TO PEAK (HOURS)	CFS PER ACRE
COMPUTE NM HYD	124.00	-	24	.00970	31.11	1.573	3.04053	1.499	5.012

PER IMP= 90.00

```
    *S***** BASIN 130 - ONSITE EXISTING (1.35 ACRES)
    COMPUTE NM HYD        130.00   -    30        .00210        6.60        .328      2.93144    1.499     4.907
PER IMP=  85.00
    *S***** BASIN 131 - ONSITE EXISTING (1.35 ACRES)
    COMPUTE NM HYD        131.00   -    31        .00210        6.75        .341      3.04057    1.499     5.024
PER IMP=  90.00
    *S***** BASIN 132 - OFFSITE EXISTING (1.24 ACRES)
    COMPUTE NM HYD        131.00   -    32        .00190        6.11        .308      3.04058    1.499     5.026
PER IMP=  90.00
    ADD HYD               200.00  3& 4  40        .01266       33.13       1.538      2.27767    1.499     4.089
    ADD HYD               201.00 40& 5  41        .01566       42.77       2.024      2.42381    1.499     4.267
    ADD HYD               202.00 41& 6  42        .01626       44.75       2.125      2.45060    1.499     4.300
    ADD HYD               203.00 42& 7  43        .01716       46.42       2.182      2.38367    1.499     4.226
    *SEXISTING POND 1 - ADJACENT TO WILSON STADIUM
    ADD HYD               300.00 11&12  50        .00221        7.24        .367      3.11617    1.499     5.116
    ADD HYD               301.00 50&13  51        .01271       28.48       1.164      1.71659    1.499     3.502
    ADD HYD               302.00 51&14  52        .02141       46.07       1.793      1.57050    1.499     3.362
    ADD HYD               303.00 52&10  53        .03041       74.94       3.253      2.00556    1.499     3.850
    ADD HYD               400.00 20&21  60        .00760       24.72       1.257      3.10230    1.499     5.083
    ADD HYD               401.00 60&22  61        .00930       30.44       1.553      3.13091    1.499     5.113
    ADD HYD               402.00 61&23  62        .01470       48.17       2.460      3.13781    1.499     5.120
    ADD HYD               500.00 24&15  70        .01650       43.22       1.989      2.25983    1.499     4.093
    ADD HYD               600.00 70&62  80        .03120       91.39       4.449      2.67349    1.499     4.577
    ADD HYD               601.00 80&53  81        .06161      166.33       7.701      2.34381    1.499     4.218
    *SEXISTING POND 2 - SOCCER FIELD
    ROUTE RESERVOIR       700.00   80   82        .03120        8.28       4.445      2.67099    2.198      .415
AC-FT=    2.439
    FINISH
```

Hydraflow Plan View (EXISTING OUTFALL FROM MANZANO)

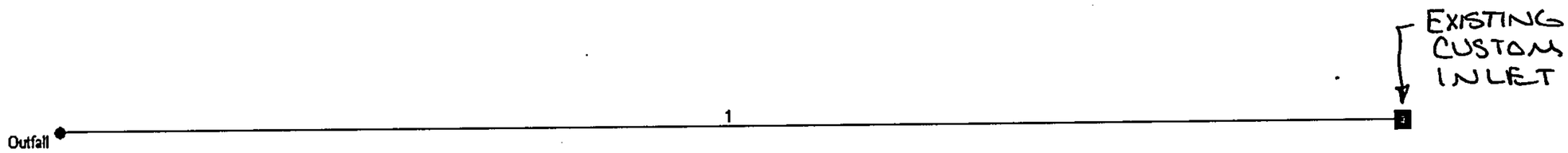

Project File: 8655outfall.stm	No. Lines: 1	12-12-2008

Hydraflow Storm Sewers 2005

Storm Sewer Inventory Report

Line No.	Alignment				Flow Data				Physical Data								Line ID
	Dnstr line No.	Line length (ft)	Defl angle (deg)	Junc type	Known Q (cfs)	Drng area (ac)	Runoff coeff (C)	Inlet time (min)	Invert El Dn (ft)	Line slope (%)	Invert El Up (ft)	Line size (in)	Line type	N value (n)	J-loss coeff (K)	Inlet/ Rim El (ft)	
1	End	506.0	0.0	Grate	13.00	0.00	0.00	0.0	5560.60	3.41	5577.87	15	Cir	0.013	0.00	5582.12	

Project File: 8655outfall.stm | Number of lines: 1 | Date: 12-12-2008

Storm Sewer Summary Report

Line No.	Line ID	Flow rate (cfs)	Line size (in)	Line length (ft)	Invert EL Dn (ft)	Invert EL Up (ft)	Line slope (%)	HGL down (ft)	HGL up (ft)	Minor loss (ft)	HGL Junct (ft)	Dns line No.
1		13.00	15 c	506.0	5560.60	5577.87	3.413	5561.85*	5582.36*	n/a	5583.03	End

Project File: 8655outfall.stm	Number of lines: 1	Run Date: 12-12-2008

NOTES: c = cir; e = ellip; b = box; Return period = 2 Yrs. ; *Surcharged (HGL above crown). ; i - Inlet control.

Inlet Report

Line No	Inlet ID	Q = CIA (cfs)	Q carry (cfs)	Q capt (cfs)	Q byp (cfs)	Junc type	Curb Inlet		Grate Inlet			Gutter							Inlet			Byp line No
							Ht (in)	L (ft)	area (sqft)	L (ft)	W (ft)	So (ft/ft)	W (ft)	Sw (ft/ft)	Sx (ft/ft)	n	Depth (ft)	Spread (ft)	Depth (ft)	Spread (ft)	Depr (in)	
1		13.00*	0.00	13.00	0.00	Grate	6.0	6.00	2.00	4.00	2.00	Sag	2.00	0.080	0.050	0.013	1.36	25.93	1.46	25.93	2.00	Off

Project File: 8655outfall.stm | Number of lines: 1 | Run Date: 12-12-2008

NOTES: Inlet N-Values = 0.016 ; Intensity = 69.87 / (Inlet time + 13.10) ^ 0.87; Return period = 2 Yrs. ; * Indicates Known Q added

Hydraulic Grade Line Computations

Line	Size	Q	Downstream								Len	Upstream								Check		JL coeff	Minor loss
	(in)	(cfs)	Invert elev (ft)	HGL elev (ft)	Depth (ft)	Area (sqft)	Vel (ft/s)	Vel head (ft)	EGL elev (ft)	Sf (%)	(ft)	Invert elev (ft)	HGL elev (ft)	Depth (ft)	Area (sqft)	Vel (ft/s)	Vel head (ft)	EGL elev (ft)	Sf (%)	Ave Sf (%)	Enrgy loss (ft)	(K)	(ft)
1	15	13.00	5560.60	5561.85	1.25	1.23	10.60	1.75	5563.60	n/a	506	5577.87	5582.36	1.25	1.23	10.59	1.74	5584.11i	n/a	n/a	18.77	0.00	n/a

Project File: 8655outfall.stm | Number of lines: 1 | Run Date: 12-12-2008

Hydraflow Plan View (PHASE 1)

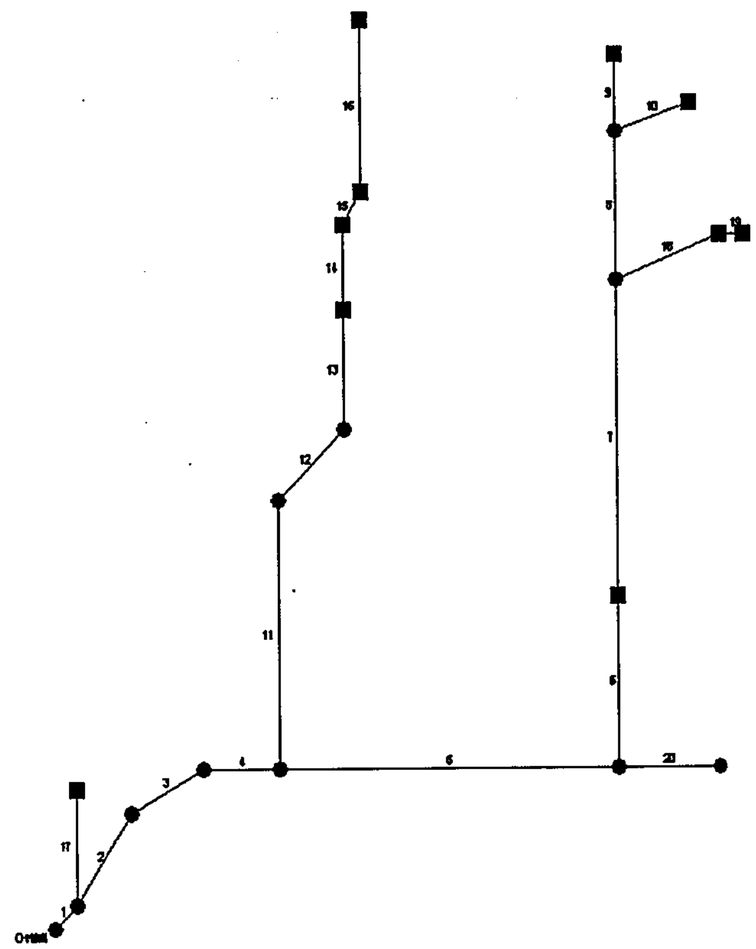

Project File: 8655SD-1.stm	No. Lines: 20	12-12-2008

Hydraflow Storm Sewers 2005

Storm Sewer Summary Report

Line No.	Line ID	Flow rate (cfs)	Line size (in)	Line length (ft)	Invert EL Dn (ft)	Invert EL Up (ft)	Line slope (%)	HGL down (ft)	HGL up (ft)	Minor loss (ft)	HGL Junct (ft)	Dns line No.
1		45.70	36 c	23.0	5590.92	5591.38	2.000	5593.92	5593.83	n/a	5594.82	End
2		29.70	24 c	73.0	5591.48	5594.40	4.000	5594.82	5596.26	n/a	5599.18	1
3		29.70	24 c	60.0	5594.50	5595.40	1.500	5599.18*	5600.21*	0.14	5600.35	2
4		29.70	24 c	55.0	5595.50	5596.33	1.509	5600.35*	5601.30*	0.69	5602.00	3
5		17.70	18 c	245.0	5600.21	5603.86	1.490	5602.00*	5608.96*	0.78	5609.74	4
6		13.00	18 c	115.0	5603.86	5606.37	2.183	5610.46*	5612.22*	0.00	5612.22	5
7		9.50	18 c	212.0	5606.32	5610.95	2.184	5612.61*	5614.35*	0.22	5614.57	6
8		6.50	18 c	100.0	5610.95	5612.95	2.000	5614.81*	5615.20*	0.11	5615.30	7
9		2.00	12 c	51.5	5612.95	5615.50	4.951	5615.41	5616.10	n/a	5616.47	8
10		4.50	12 c	57.0	5612.95	5614.09	1.999	5615.30*	5616.21*	0.00	5616.21	8
11		12.00	24 c	180.0	5596.43	5598.23	1.000	5603.16*	5603.67*	0.02	5603.69	4
12		10.30	18 c	67.0	5598.23	5598.90	1.000	5603.69*	5604.33*	0.05	5604.39	11
13		10.30	18 c	80.0	5598.90	5599.70	1.000	5604.39*	5605.16*	0.00	5605.16	12
14		7.60	18 c	58.0	5599.70	5600.28	0.999	5605.40*	5605.70*	0.03	5605.73	13
15		5.60	18 c	26.0	5600.28	5600.54	1.001	5605.86*	5605.94*	0.02	5605.95	14
16		4.60	18 c	115.0	5600.54	5601.69	1.000	5606.00*	5606.22*	0.00	5606.22	15
17		16.00	24 c	78.0	5591.48	5599.02	9.667	5594.82	5600.44	n/a	5601.56	1
18		3.00	8 c	80.0	5610.95	5614.00	3.812	5614.57*	5619.51*	0.00	5619.51	7
19		1.50	8 c	17.5	5614.00	5614.34	1.942	5620.37*	5620.64*	0.00	5620.64	18
20		4.70	18 c	73.0	5603.78	5604.92	1.562	5611.19*	5611.34*	0.00	5611.34	5

Project File: 8655SD-1.stm	Number of lines: 20	Run Date: 12-12-2008

NOTES: c = cir; e = ellip; b = box; Return period = 2 Yrs. ; *Surcharged (HGL above crown). ; i - Inlet control.

Storm Sewer Inventory Report

Line No.	Alignment				Flow Data				Physical Data								Line ID
	Dnstr line No.	Line length (ft)	Defl angle (deg)	Junc type	Known Q (cfs)	Drng area (ac)	Runoff coeff (C)	Inlet time (min)	Invert El Dn (ft)	Line slope (%)	Invert El Up (ft)	Line size (in)	Line type	N value (n)	J-loss coeff (K)	Inlet/ Rim El (ft)	
1	End	23.0	-45.0	MH	0.00	0.00	0.00	0.0	5590.92	2.00	5591.38	36	Cir	0.013	0.50	5597.00	
2	1	73.0	-12.0	MH	0.00	0.00	0.00	0.0	5591.48	4.00	5594.40	24	Cir	0.013	0.10	5602.87	
3	2	60.0	27.0	MH	0.00	0.00	0.00	0.0	5594.50	1.50	5595.40	24	Cir	0.013	0.10	5603.43	
4	3	55.0	30.0	MH	0.00	0.00	0.00	0.0	5595.50	1.51	5596.33	24	Cir	0.013	0.50	5604.39	
5	4	245.0	0.0	MH	0.00	0.00	0.00	0.0	5600.21	1.49	5603.86	18	Cir	0.013	0.50	5613.26	
6	5	115.0	-90.0	Grate	3.50	0.00	0.00	0.0	5603.86	2.18	5606.37	18	Cir	0.013	0.00	5615.00	
7	6	212.0	0.0	MH	0.00	0.00	0.00	0.0	5606.32	2.18	5610.95	18	Cir	0.013	0.50	5617.65	
8	7	100.0	0.0	MH	0.00	0.00	0.00	0.0	5610.95	2.00	5612.95	18	Cir	0.013	0.50	5618.40	
9	8	51.5	0.0	Grate	2.00	0.00	0.00	0.0	5612.95	4.95	5615.50	12	Cir	0.013	0.00	5618.50	
10	8	57.0	70.0	Grate	4.50	0.00	0.00	0.0	5612.95	2.00	5614.09	12	Cir	0.013	0.00	5618.75	
11	4	180.0	-90.0	MH	1.70	0.00	0.00	0.0	5596.43	1.00	5598.23	24	Cir	0.013	0.10	5606.73	
12	11	67.0	45.0	MH	0.00	0.00	0.00	0.0	5598.23	1.00	5598.90	18	Cir	0.013	0.10	5608.00	
13	12	80.0	-45.0	Grate	2.70	0.00	0.00	0.0	5598.90	1.00	5599.70	18	Cir	0.013	0.00	5607.74	
14	13	58.0	0.0	Grate	2.00	0.00	0.00	0.0	5599.70	1.00	5600.28	18	Cir	0.013	0.10	5608.00	
15	14	26.0	30.0	Grate	1.00	0.00	0.00	0.0	5600.28	1.00	5600.54	18	Cir	0.013	0.10	5608.00	
16	15	115.0	-30.0	Grate	4.60	0.00	0.00	0.0	5600.54	1.00	5601.69	18	Cir	0.013	0.00	5608.00	
17	1	78.0	-45.0	Curb	16.00	0.00	0.00	0.0	5591.48	9.67	5599.02	24	Cir	0.013	0.00	5601.02	
18	7	80.0	68.0	Grate	1.50	0.00	0.00	0.0	5610.95	3.81	5614.00	8	Cir	0.013	0.00	5617.16	
19	18	17.5	20.0	Grate	1.50	0.00	0.00	0.0	5614.00	1.94	5614.34	8	Cir	0.013	0.00	5618.56	
20	5	73.0	0.0	MH	4.70	0.00	0.00	0.0	5603.78	1.56	5604.92	18	Cir	0.013	0.00	5614.74	

Project File: 8655SD-1.stm | Number of lines: 20 | Date: 12-12-2008

Hydraulic Grade Line Computations

Line	Size	Q	Downstream								Len	Upstream								Check		JL coeff	Minor loss
	(in)	(cfs)	Invert elev (ft)	HGL elev (ft)	Depth (ft)	Area (sqft)	Vel (ft/s)	Vel head (ft)	EGL elev (ft)	Sf (%)	(ft)	Invert elev (ft)	HGL elev (ft)	Depth (ft)	Area (sqft)	Vel (ft/s)	Vel head (ft)	EGL elev (ft)	Sf (%)	Ave Sf (%)	Enrgy loss (ft)	(K)	(ft)
1	36	45.70	5590.92	5593.92	3.00	7.07	6.47	0.65	5594.57	n/a	23.0	5591.38	5593.83	2.45	6.17	7.41	0.85	5594.68i	n/a	n/a	-0.745	0.50	n/a
2	24	29.70	5591.48	5594.82	2.00	3.04	9.46	1.39	5596.21	n/a	73.0	5594.40	5596.26	1.86**	3.04	9.76	1.48	5597.74i	n/a	n/a	n/a	0.10	n/a
3	24	29.70	5594.50	5599.18	2.00	3.14	9.46	1.39	5600.57	1.725	60.0	5595.40	5600.21	2.00	3.14	9.45	1.39	5601.60	1.724	1.725	1.035	0.10	0.14
4	24	29.70	5595.50	5600.35	2.00	3.14	9.46	1.39	5601.74	1.725	55.0	5596.33	5601.30	2.00	3.14	9.45	1.39	5602.69	1.724	1.725	0.949	0.50	0.69
5	18	17.70	5600.21	5602.00	1.50	1.77	10.02	1.56	5603.56	2.842	245	5603.86	5608.96	1.50	1.77	10.02	1.56	5610.52	2.841	2.842	6.962	0.50	0.78
6	18	13.00	5603.86	5610.46	1.50	1.77	7.36	0.84	5611.30	1.533	115	5606.37	5612.22	1.50	1.77	7.36	0.84	5613.06	1.533	1.533	1.763	0.00	0.00
7	18	9.50	5606.32	5612.61	1.50	1.77	5.38	0.45	5613.06	0.819	212	5610.95	5614.35	1.50	1.77	5.38	0.45	5614.80	0.818	0.819	1.735	0.50	0.22
8	18	6.50	5610.95	5614.81	1.50	1.77	3.68	0.21	5615.02	0.383	100	5612.95	5615.20	1.50	1.77	3.68	0.21	5615.41	0.383	0.383	0.383	0.50	0.11
9	12	2.00	5612.95	5615.41	1.00	0.79	2.55	0.10	5615.51	n/a	51.5	5615.50	5616.10	0.60**	0.49	4.07	0.26	5616.36i	n/a	n/a	n/a	0.00	n/a
10	12	4.50	5612.95	5615.30	1.00	0.79	5.73	0.51	5615.81	1.597	57.0	5614.09	5616.21	1.00	0.79	5.73	0.51	5616.72	1.597	1.597	0.910	0.00	0.00
11	24	12.00	5596.43	5603.16	2.00	3.14	3.82	0.23	5603.39	0.282	180	5598.23	5603.67	2.00	3.14	3.82	0.23	5603.89	0.282	0.282	0.507	0.10	0.02
12	18	10.30	5598.23	5603.69	1.50	1.77	5.83	0.53	5604.22	0.962	67.0	5598.90	5604.33	1.50	1.77	5.83	0.53	5604.86	0.962	0.962	0.645	0.10	0.05
13	18	10.30	5598.90	5604.39	1.50	1.77	5.83	0.53	5604.92	0.962	80.0	5599.70	5605.16	1.50	1.77	5.83	0.53	5605.69	0.962	0.962	0.770	0.00	0.00
14	18	7.60	5599.70	5605.40	1.50	1.77	4.30	0.29	5605.69	0.524	58.0	5600.28	5605.70	1.50	1.77	4.30	0.29	5605.99	0.524	0.524	0.304	0.10	0.03
15	18	5.60	5600.28	5605.86	1.50	1.77	3.17	0.16	5606.02	0.285	26.0	5600.54	5605.94	1.50	1.77	3.17	0.16	5606.09	0.284	0.284	0.074	0.10	0.02
16	18	4.60	5600.54	5606.00	1.50	1.77	2.60	0.11	5606.11	0.192	115	5601.69	5606.22	1.50	1.77	2.60	0.11	5606.33	0.192	0.192	0.221	0.00	0.00
17	24	16.00	5591.48	5594.82	2.00	3.14	5.09	0.40	5595.23	n/a	78.0	5599.02	5600.44	1.42**	2.38	6.72	0.70	5601.14i	n/a	n/a	n/a	0.00	n/a
18	8	3.00	5610.95	5614.57	0.67	0.35	8.60	1.15	5615.72	6.173	80.0	5614.00	5619.51	0.67**	0.35	8.59	1.15	5620.66	6.171	6.172	4.937	0.00	0.00
19	8	1.50	5614.00	5620.37	0.67	0.35	4.30	0.29	5620.66	1.543	17.5	5614.34	5620.64	0.67	0.35	4.30	0.29	5620.93	1.543	1.543	0.270	0.00	0.00
20	18	4.70	5603.78	5611.19	1.50	1.77	2.66	0.11	5611.30	0.200	73.0	5604.92	5611.34	1.50	1.77	2.66	0.11	5611.45	0.200	0.200	0.146	0.00	0.00

Project File: 8655SD-1.stm | Number of lines: 20 | Run Date: 12-12-2008

Notes: ; ** Critical depth.; j-Line contains hyd. jump.

Inlet Report

Line No	Inlet ID	Q = CIA (cfs)	Q carry (cfs)	Q capt (cfs)	Q byp (cfs)	Junc type	Curb Inlet		Grate Inlet			Gutter							Inlet			Byp line No
							Ht (in)	L (ft)	area (sqft)	L (ft)	W (ft)	So (ft/ft)	W (ft)	Sw (ft/ft)	Sx (ft/ft)	n	Depth (ft)	Spread (ft)	Depth (ft)	Spread (ft)	Depr (in)	
1		0.00	6.40	0.00	6.40	MH	6.0	6.00	2.00	4.00	2.00	Sag	2.00	0.080	0.050	0.013	0.00	0.00	0.00	0.00	0.00	Off
2		0.00	6.40	0.00	6.40	MH	6.0	6.00	2.00	4.00	2.00	Sag	2.00	0.080	0.050	0.013	0.00	0.00	0.00	0.00	0.00	1
3		0.00	6.40	0.00	6.40	MH	6.0	6.00	2.00	4.00	2.00	Sag	2.00	0.080	0.050	0.013	0.00	0.00	0.00	0.00	0.00	2
4		0.00	6.40	0.00	6.40	MH	6.0	6.00	2.00	4.00	2.00	Sag	2.00	0.080	0.050	0.013	0.00	0.00	0.00	0.00	0.00	3
5		0.00	4.70	0.00	4.70	MH	6.0	6.00	2.00	4.00	2.00	Sag	2.00	0.080	0.050	0.013	0.00	0.00	0.00	0.00	0.00	4
6		3.50*	0.00	3.50	0.00	Grate	6.0	6.00	2.00	4.00	2.00	Sag	2.00	0.080	0.050	0.013	0.17	2.20	0.28	2.20	2.00	5
7		0.00	0.00	0.00	0.00	MH	6.0	6.00	2.00	4.00	2.00	Sag	2.00	0.080	0.050	0.013	0.00	0.00	0.00	0.00	0.00	6
8		0.00	0.00	0.00	0.00	MH	6.0	6.00	2.00	4.00	2.00	Sag	2.00	0.080	0.050	0.013	0.00	0.00	0.00	0.00	0.00	7
9		2.00*	0.00	2.00	0.00	Grate	6.0	6.00	2.00	4.00	2.00	Sag	2.00	0.080	0.050	0.013	0.08	1.05	0.19	1.43	2.00	8
10		4.50*	0.00	4.50	0.00	Grate	6.0	6.00	2.00	4.00	2.00	Sag	2.00	0.080	0.050	0.013	0.22	3.21	0.33	3.21	2.00	8
11		1.70*	0.00	0.00	1.70	MH	6.0	6.00	2.00	4.00	2.00	Sag	2.00	0.080	0.050	0.013	0.00	0.00	0.00	0.00	0.00	4
12		0.00	0.00	0.00	0.00	MH	6.0	6.00	2.00	4.00	2.00	Sag	2.00	0.080	0.050	0.013	0.00	0.00	0.00	0.00	0.00	Off
13		2.70*	0.00	2.70	0.00	Grate	6.0	6.00	2.00	4.00	2.00	Sag	2.00	0.080	0.050	0.013	0.13	1.58	0.23	1.75	2.00	12
14		2.00*	0.00	2.00	0.00	Grate	6.0	6.00	2.00	4.00	2.00	Sag	2.00	0.080	0.050	0.013	0.08	1.05	0.19	1.43	2.00	13
15		1.00*	0.00	1.00	0.00	Grate	6.0	6.00	2.00	4.00	2.00	Sag	2.00	0.080	0.050	0.013	0.01	0.17	0.12	0.90	2.00	14
16		4.60*	0.00	4.60	0.00	Grate	6.0	6.00	2.00	4.00	2.00	Sag	2.00	0.080	0.050	0.013	0.23	3.31	0.33	3.31	2.00	15
17		16.00*	0.00	16.00	0.00	Curb	6.0	6.00	2.00	4.00	2.00	Sag	2.00	0.080	0.050	0.013	0.78	14.42	0.89	14.42	2.00	1
18		1.50*	0.00	1.50	0.00	Grate	6.0	6.00	2.00	4.00	2.00	Sag	2.00	0.080	0.050	0.013	0.05	0.63	0.16	1.18	2.00	7
19		1.50*	0.00	1.50	0.00	Grate	6.0	6.00	2.00	4.00	2.00	Sag	2.00	0.080	0.050	0.013	0.05	0.63	0.16	1.18	2.00	18
20		4.70*	0.00	0.00	4.70	MH	6.0	6.00	2.00	4.00	2.00	Sag	2.00	0.080	0.050	0.013	0.00	0.00	0.00	0.00	0.00	5

Project File: 8655SD-1.stm | Number of lines: 20 | Run Date: 12-12-2008

NOTES: Inlet N-Values = 0.016 ; Intensity = 69.87 / (Inlet time + 13.10) ^ 0.87; Return period = 2 Yrs. ; * Indicates Known Q added

Hydraflow Plan View (PHASE 2)

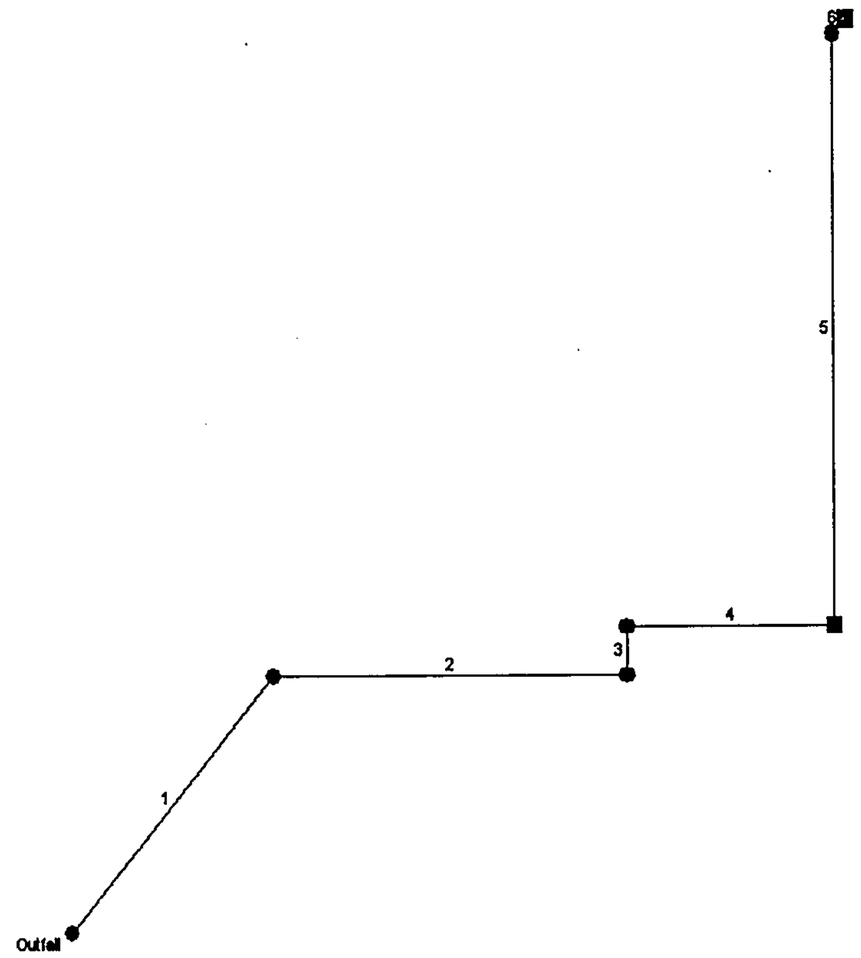

Project File: 8655SD-2.stm	No. Lines: 6	12-12-2008

Hydraflow Storm Sewers 2005

Storm Sewer Inventory Report

Line No.	Alignment				Flow Data				Physical Data								Line ID
	Dnstr line No.	Line length (ft)	Defl angle (deg)	Junc type	Known Q (cfs)	Drng area (ac)	Runoff coeff (C)	Inlet time (min)	Invert El Dn (ft)	Line slope (%)	Invert El Up (ft)	Line size (in)	Line type	N value (n)	J-loss coeff (K)	Inlet/ Rim El (ft)	
1	End	171.0	-50.0	MH	0.00	0.00	0.00	0.0	5604.90	1.66	5607.74	18	Cir	0.013	0.00	5618.44	
2	1	193.0	50.0	MH	1.69	0.00	0.00	0.0	5607.74	1.84	5611.29	18	Cir	0.013	0.00	5623.15	
3	2	25.0	-90.0	MH	0.00	0.00	0.00	0.0	5617.00	8.00	5619.00	18	Cir	0.011	0.00	5625.78	
4	3	114.0	90.0	Grate	4.00	0.00	0.00	0.0	5619.00	5.26	5625.00	18	Cir	0.011	0.00	5629.60	
5	4	300.0	-90.0	MH	0.00	0.00	0.00	0.0	5625.00	0.45	5626.36	24	Cir	0.011	0.00	5629.20	
6	5	10.0	45.0	Grate	10.12	0.00	0.00	0.0	5626.36	1.00	5626.46	24	Cir	0.011	0.00	5628.70	

Project File: 8655SD-2.stm | Number of lines: 6 | Date: 12-12-2008

Storm Sewer Summary Report

Line No.	Line ID	Flow rate (cfs)	Line size (in)	Line length (ft)	Invert EL Dn (ft)	Invert EL Up (ft)	Line slope (%)	HGL down (ft)	HGL up (ft)	Minor loss (ft)	HGL Junct (ft)	Dns line No.
1		15.81	18 c	171.0	5604.90	5607.74	1.661	5606.40*	5610.28*	n/a	5611.73	End
2		15.81	18 c	193.0	5607.74	5611.29	1.839	5611.73*	5616.10*	0.00	5616.10	1
3		14.12	18 c	25.0	5617.00	5619.00	8.000	5617.66*	5623.31*	0.00	5623.31	2
4		14.12	18 c	114.0	5619.00	5625.00	5.263	5623.31	5626.39	n/a	5628.46	3
5		10.12	24 c	300.0	5625.00	5626.36	0.453	5628.46*	5628.89*	0.00	5628.89	4
6		10.12	24 c	10.0	5626.36	5626.46	1.001	5628.89*	5628.91*	0.00	5628.91	5

Project File: 8655SD-2.stm | Number of lines: 6 | Run Date: 12-12-2008

NOTES: c = cir; e = ellip; b = box; Return period = 2 Yrs. ; *Surcharged (HGL above crown). ; i - Inlet control.

Inlet Report

Line No	Inlet ID	Q = CIA (cfs)	Q carry (cfs)	Q capt (cfs)	Q byp (cfs)	Junc type	Curb Inlet		Grate Inlet			Gutter							Inlet			Byp line No
							Ht (in)	L (ft)	area (sqft)	L (ft)	W (ft)	So (ft/ft)	W (ft)	Sw (ft/ft)	Sx (ft/ft)	n	Depth (ft)	Spread (ft)	Depth (ft)	Spread (ft)	Depr (in)	
1		0.00	1.69	0.00	1.69	MH	6.0	6.00	2.00	4.00	2.00	Sag	2.00	0.080	0.050	0.013	0.00	0.00	0.00	0.00	2.00	Off
2		1.69*	0.00	0.00	1.69	MH	6.0	6.00	2.00	4.00	2.00	Sag	2.00	0.080	0.050	0.013	0.00	0.00	0.00	0.00	2.00	1
3		0.00	0.00	0.00	0.00	MH	6.0	6.00	2.00	4.00	2.00	Sag	2.00	0.080	0.050	0.013	0.00	0.00	0.00	0.00	2.00	2
4		4.00*	0.00	4.00	0.00	Grate	6.0	6.00	2.00	4.00	2.00	Sag	2.00	0.080	0.050	0.013	0.20	2.72	0.30	2.72	2.00	3
5		0.00	0.00	0.00	0.00	MH	6.0	6.00	2.00	4.00	2.00	Sag	2.00	0.080	0.050	0.013	0.00	0.00	0.00	0.00	2.00	4
6		10.12*	0.00	10.12	0.00	Grate	6.0	6.00	2.00	4.00	2.00	Sag	2.00	0.080	0.050	0.013	0.78	14.40	0.89	14.40	2.00	5

Project File: 8655SD-2.stm | Number of lines: 6 | Run Date: 12-12-2008

NOTES: Inlet N-Values = 0.016 ; Intensity = 69.87 / (Inlet time + 13.10) ^ 0.87; Return period = 2 Yrs. ; * Indicates Known Q added

Hydraulic Grade Line Computations

Line	Size	Q	Downstream								Len	Upstream								Check		JL coeff	Minor loss
	(in)	(cfs)	Invert elev (ft)	HGL elev (ft)	Depth (ft)	Area (sqft)	Vel (ft/s)	Vel head (ft)	EGL elev (ft)	Sf (%)	(ft)	Invert elev (ft)	HGL elev (ft)	Depth (ft)	Area (sqft)	Vel (ft/s)	Vel head (ft)	EGL elev (ft)	Sf (%)	Ave Sf (%)	Enrgy loss (ft)	(K)	(ft)
1	18	15.81	5604.90	5606.40	1.50	1.77	8.95	1.24	5607.65	n/a	171	5607.74	5610.28	1.50	1.77	8.95	1.24	5611.52i	n/a	n/a	2.633	0.00	n/a
2	18	15.81	5607.74	5611.73	1.50	1.77	8.95	1.24	5612.97	2.268	193	5611.29	5616.10	1.50	1.77	8.95	1.24	5617.35	2.267	2.267	4.376	0.00	0.00
3	18	14.12	5617.00	5617.66	0.66*	0.75	18.78	5.48	5623.14	7.990	25.0	5619.00	5623.31	1.50	1.77	7.99	0.99	5624.30	1.295	4.642	1.161	0.00	0.00
4	18	14.12	5619.00	5623.31	1.50	1.71	7.99	0.99	5624.30	n/a	114	5625.00	5626.39	1.39**	1.71	8.27	1.06	5627.45i	n/a	n/a	n/a	0.00	n/a
5	24	10.12	5625.00	5628.46	2.00	3.14	3.22	0.16	5628.63	0.143	300	5626.36	5628.89	2.00	3.14	3.22	0.16	5629.05	0.143	0.143	0.430	0.00	0.00
6	24	10.12	5626.36	5628.89	2.00	3.14	3.22	0.16	5629.06	0.143	10.0	5626.46	5628.91	2.00	3.14	3.22	0.16	5629.07	0.143	0.143	0.014	0.00	0.00

Project File: 8655SD-2.stm | Number of lines: 6 | Run Date: 12-12-2008

Notes: * Normal depth assumed.; ** Critical depth.; j-Line contains hyd. jump.

Hydraflow Plan View (PHASE 3)

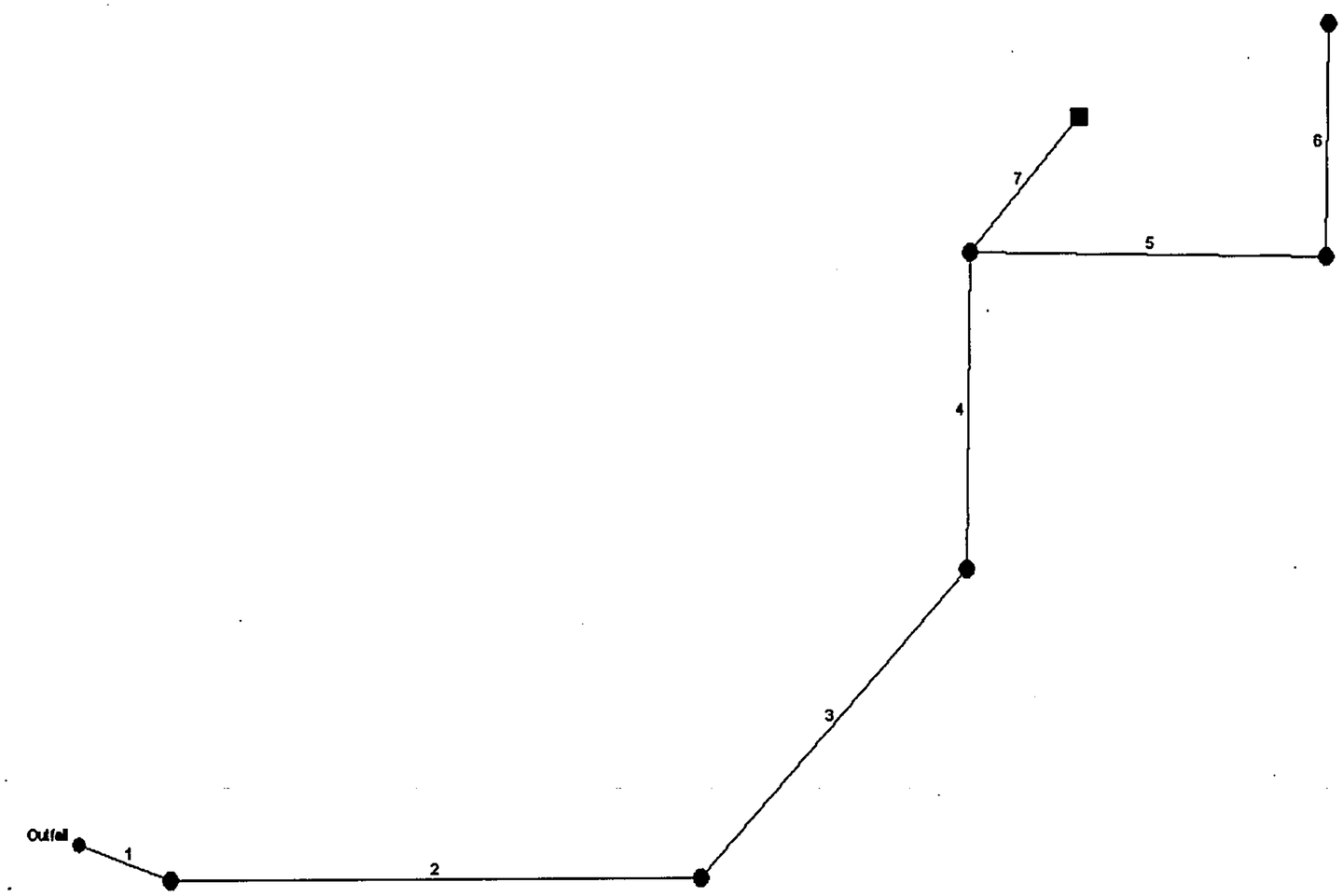

Project File: 8655SD-3.stm	No. Lines: 7	12-12-2008

Hydraflow Storm Sewers 2005

Storm Sewer Inventory Report

Line No.	Alignment				Flow Data				Physical Data								Line ID
	Dnstr line No.	Line length (ft)	Defl angle (deg)	Junc type	Known Q (cfs)	Drng area (ac)	Runoff coeff (C)	Inlet time (min)	Invert El Dn (ft)	Line slope (%)	Invert El Up (ft)	Line size (in)	Line type	N value (n)	J-loss coeff (K)	Inlet/ Rim El (ft)	
1	End	50.0	20.0	MH	0.00	0.00	0.00	0.0	5592.00	12.00	5598.00	36	Cir	0.013	0.00	5604.00	
2	1	270.0	-20.0	MH	0.00	0.00	0.00	0.0	5598.00	3.33	5607.00	36	Cir	0.013	0.00	5615.00	
3	2	200.0	-47.0	MH	0.00	0.00	0.00	0.0	5607.00	1.50	5610.00	36	Cir	0.013	0.00	5618.00	
4	3	150.0	-42.0	MH	0.00	0.00	0.00	0.0	5610.00	1.33	5612.00	36	Cir	0.013	0.00	5618.00	
5	4	180.0	90.0	MH	0.00	0.00	0.00	0.0	5612.00	5.83	5622.50	36	Cir	0.013	0.00	5629.00	
6	5	110.0	-90.0	MH	44.76	0.00	0.00	0.0	5622.50	0.91	5623.50	36	Cir	0.013	0.00	5629.50	
7	4	85.0	40.0	Curb	1.66	0.00	0.00	0.0	5612.00	16.47	5626.00	18	Cir	0.013	0.00	5626.00	

Project File: 8655SD-3.stm | Number of lines: 7 | Date: 12-12-2008

Storm Sewer Summary Report

Line No.	Line ID	Flow rate (cfs)	Line size (in)	Line length (ft)	Invert EL Dn (ft)	Invert EL Up (ft)	Line slope (%)	HGL down (ft)	HGL up (ft)	Minor loss (ft)	HGL Junct (ft)	Dns line No.
1		46.42	36 c	50.0	5592.00	5598.00	12.000	5595.00	5600.17	n/a	5601.99	End
2		46.42	36 c	270.0	5598.00	5607.00	3.333	5601.99	5609.17	n/a	5610.99	1
3		46.42	36 c	200.0	5607.00	5610.00	1.500	5610.99	5612.17	n/a	5613.99	2
4		46.42	36 c	150.0	5610.00	5612.00	1.333	5613.99	5614.55	n/a	5615.40	3
5		44.76	36 c	180.0	5612.00	5622.50	5.833	5615.40	5624.63	n/a	5626.37	4
6		44.76	36 c	110.0	5622.50	5623.50	0.909	5626.37*	5626.87*	0.00	5626.87	5
7		1.66	18 c	85.0	5612.00	5626.00	16.471	5615.40	5626.49	n/a	5626.69	4

Project File: 8655SD-3.stm | Number of lines: 7 | Run Date: 12-12-2008

NOTES: c = cir; e = ellip; b = box; Return period = 2 Yrs. ; *Surcharged (HGL above crown). ; i - Inlet control.

Inlet Report

Line No	Inlet ID	Q = CIA (cfs)	Q carry (cfs)	Q capt (cfs)	Q byp (cfs)	Junc type	Curb Inlet		Grate Inlet			Gutter							Inlet			Byp line No
							Ht (in)	L (ft)	area (sqft)	L (ft)	W (ft)	So (ft/ft)	W (ft)	Sw (ft/ft)	Sx (ft/ft)	n	Depth (ft)	Spread (ft)	Depth (ft)	Spread (ft)	Depr (in)	
1		0.00	44.76	0.00	44.76	MH	6.0	6.00	2.00	4.00	2.00	Sag	2.00	0.080	0.050	0.013	0.00	0.00	0.00	0.00	2.00	Off
2		0.00	44.76	0.00	44.76	MH	6.0	6.00	2.00	4.00	2.00	Sag	2.00	0.080	0.050	0.013	0.00	0.00	0.00	0.00	2.00	1
3		0.00	44.76	0.00	44.76	MH	6.0	6.00	2.00	4.00	2.00	Sag	2.00	0.080	0.050	0.013	0.00	0.00	0.00	0.00	2.00	2
4		0.00	44.76	0.00	44.76	MH	6.0	6.00	2.00	4.00	2.00	Sag	2.00	0.080	0.050	0.013	0.00	0.00	0.00	0.00	2.00	3
5		0.00	44.76	0.00	44.76	MH	6.0	6.00	2.00	4.00	2.00	Sag	2.00	0.080	0.050	0.013	0.00	0.00	0.00	0.00	2.00	4
6		44.76*	0.00	0.00	44.76	MH	6.0	6.00	2.00	4.00	2.00	Sag	2.00	0.080	0.050	0.013	0.00	0.00	0.00	0.00	2.00	5
7		1.66*	0.00	1.66	0.00	Curb	6.0	6.00	2.00	4.00	2.00	Sag	2.00	0.080	0.050	0.013	0.24	3.53	0.34	3.53	2.00	4

Project File: 8655SD-3.stm | Number of lines: 7 | Run Date: 12-12-2008

NOTES: Inlet N-Values = 0.016 ; Intensity = 69.87 / (Inlet time + 13.10) ^ 0.87; Return period = 2 Yrs. ; * Indicates Known Q added

Hydraulic Grade Line Computations

Line	Size	Q	Downstream								Len	Upstream								Check		JL coeff	Minor loss
	(in)	(cfs)	Invert elev (ft)	HGL elev (ft)	Depth (ft)	Area (sqft)	Vel (ft/s)	Vel head (ft)	EGL elev (ft)	Sf (%)	(ft)	Invert elev (ft)	HGL elev (ft)	Depth (ft)	Area (sqft)	Vel (ft/s)	Vel head (ft)	EGL elev (ft)	Sf (%)	Ave Sf (%)	Enrgy loss (ft)	(K)	(ft)
1	36	46.42	5592.00	5595.00	3.00	7.07	6.57	0.67	5595.67	n/a	50.0	5598.00	5600.17	2.17**	5.48	8.47	1.12	5601.29i	n/a	n/a	n/a	0.00	n/a
2	36	46.42	5598.00	5601.99	3.00	7.07	6.57	0.67	5602.66	n/a	270	5607.00	5609.17	2.17**	5.48	8.47	1.12	5610.29i	n/a	n/a	n/a	0.00	n/a
3	36	46.42	5607.00	5610.99	3.00	7.07	6.57	0.67	5611.66	n/a	200	5610.00	5612.17	2.17**	5.48	8.47	1.12	5613.29i	n/a	n/a	n/a	0.00	n/a
4	36	46.42	5610.00	5613.99	3.00	7.07	6.57	0.67	5614.66	n/a	150	5612.00	5614.55	2.55	6.40	7.25	0.82	5615.37i	n/a	n/a	-0.110	0.00	n/a
5	36	44.76	5612.00	5615.40	3.00	7.07	6.33	0.62	5616.03	n/a	180	5622.50	5624.63	2.13**	5.37	8.33	1.08	5625.71i	n/a	n/a	n/a	0.00	n/a
6	36	44.76	5622.50	5626.37	3.00	7.07	6.33	0.62	5627.00	0.451	110	5623.50	5626.87	3.00	7.07	6.33	0.62	5627.49	0.450	0.451	0.496	0.00	0.00
7	18	1.66	5612.00	5615.40	1.50	1.77	0.94	0.01	5615.42	n/a	85.0	5626.00	5626.49	0.49**	0.50	3.29	0.17	5626.66i	n/a	n/a	n/a	0.00	n/a

Project File: 8655SD-3.stm | Number of lines: 7 | Run Date: 12-12-2008

Notes: ; ** Critical depth.; j-Line contains hyd. jump.

Hydraflow Plan View (PHASE 4)

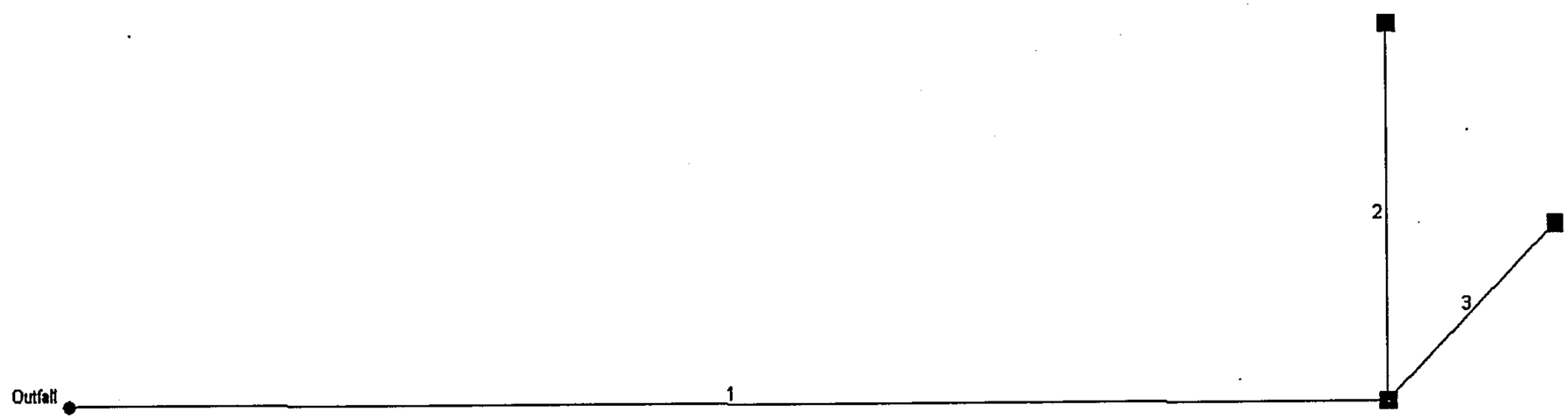

8655SD-4	No. Lines: 3	12-12-2008

Hydraflow Storm Sewers 2005

Storm Sewer Inventory Report

Line No.	Alignment				Flow Data				Physical Data								Line ID
	Dnstr line No.	Line length (ft)	Defl angle (deg)	Junc type	Known Q (cfs)	Drng area (ac)	Runoff coeff (C)	Inlet time (min)	Invert El Dn (ft)	Line slope (%)	Invert El Up (ft)	Line size (in)	Line type	N value (n)	J-loss coeff (K)	Inlet/ Rim El (ft)	
1	End	508.0	0.1	Grate	9.00	0.00	0.00	0.0	5559.40	3.64	5577.87	30	Cir	0.013	0.50	5582.13	
2	1	135.0	-90.1	Curb	1.00	0.00	0.00	0.0	5577.87	4.19	5583.52	15	Cir	0.013	0.00	5585.52	
3	1	90.0	-44.4	Curb	18.28	0.00	0.00	0.0	5577.87	4.59	5582.00	18	Cir	0.013	0.00	5585.00	

8655SD-4 | Number of lines: 3 | Date: 12-12-2008

Storm Sewer Summary Report

Line No.	Line ID	Flow rate (cfs)	Line size (in)	Line length (ft)	Invert EL Dn (ft)	Invert EL Up (ft)	Line slope (%)	HGL down (ft)	HGL up (ft)	Minor loss (ft)	HGL Junct (ft)	Dns line No.
1		28.28	30 c	508.0	5559.40	5577.87	3.636	5561.90	5579.65	n/a	5581.08	End
2		1.00	15 c	135.0	5577.87	5583.52	4.185	5581.08	5583.92	n/a	5584.07	1
3		18.28	18 c	90.0	5577.87	5582.00	4.589	5581.08*	5583.81*	n/a	5587.08	1

8655SD-4	Number of lines: 3	Run Date: 12-12-2008

NOTES: c = cir; e = ellip; b = box; Return period = 2 Yrs. ; *Surcharged (HGL above crown). ; i - Inlet control.

Inlet Report

Line No	Inlet ID	Q = CIA (cfs)	Q carry (cfs)	Q capt (cfs)	Q byp (cfs)	Junc type	Curb Inlet		Grate Inlet			Gutter							Inlet			Byp line No
							Ht (in)	L (ft)	area (sqft)	L (ft)	W (ft)	So (ft/ft)	W (ft)	Sw (ft/ft)	Sx (ft/ft)	n	Depth (ft)	Spread (ft)	Depth (ft)	Spread (ft)	Depr (in)	
1		9.00*	0.00	9.00	0.00	Grate	6.0	6.00	2.00	4.00	2.00	Sag	2.00	0.080	0.050	0.013	0.59	10.69	0.70	10.69	2.00	Off
2		1.00*	0.00	1.00	0.00	Curb	6.0	6.00	2.00	4.00	2.00	Sag	2.00	0.080	0.050	0.013	0.19	2.52	0.29	2.52	2.00	1
3		18.28*	0.00	18.28	0.00	Curb	6.0	6.00	2.00	4.00	2.00	Sag	2.00	0.080	0.050	0.013	0.95	17.80	1.06	17.80	2.00	1

8655SD-4 | Number of lines: 3 | Run Date: 12-12-2008

NOTES: Inlet N-Values = 0.016 ; Intensity = 69.87 / (Inlet time + 13.10) ^ 0.87; Return period = 2 Yrs. ; * Indicates Known Q added

Hydraulic Grade Line Computations

Line	Size	Q	Downstream								Len	Upstream								Check		JL coeff	Minor loss
	(in)	(cfs)	Invert elev (ft)	HGL elev (ft)	Depth (ft)	Area (sqft)	Vel (ft/s)	Vel head (ft)	EGL elev (ft)	Sf (%)	(ft)	Invert elev (ft)	HGL elev (ft)	Depth (ft)	Area (sqft)	Vel (ft/s)	Vel head (ft)	EGL elev (ft)	Sf (%)	Ave Sf (%)	Enrgy loss (ft)	(K)	(ft)
1	30	28.28	5559.40	5561.90	2.50	4.91	5.76	0.52	5562.42	n/a	508	5577.87	5579.65	1.78**	3.73	7.58	0.89	5580.54i	n/a	n/a	n/a	0.50	n/a
2	15	1.00	5577.87	5581.08	1.25	1.23	0.82	0.01	5581.09	n/a	135	5583.52	5583.92	0.40**	0.34	2.95	0.14	5584.06i	n/a	n/a	n/a	0.00	n/a
3	18	18.28	5577.87	5581.08	1.50	1.77	10.35	1.66	5582.75	n/a	90.0	5582.00	5583.81	1.50	1.77	10.34	1.66	5585.47i	n/a	n/a	1.064	0.00	n/a

8655SD-4 | Number of lines: 3 | Run Date: 12-12-2008

Notes: ; ** Critical depth.; j-Line contains hyd. jump.

Wilson & Company

Project Name	Manzano HS - Drainage Improvements
Project Number	860005500
Date	11/20/2008
Engineer	JRW

Pond Stage, Storage, Outfall Calculator

Existing Pond #2 Orifice Calculator

Input

Cd		0.61
Dia	in	11
HWSEL		5590.0

Output

Invert		5582.3
Radius	ft	0.46
Area	sqft	0.66
CWSEL		5588.0

11" Exist Orifice Per approved DMP by JMA (1993)

Solution

Q	7.56

WSEL	Q_{OUT}	Storage, acft
5585.0	0.00	0.00
5586.0	6.02	0.05
5587.0	6.83	0.31
5588.0	7.56	1.01
5589.0	8.22	2.13
5589.5	8.53	3.74

CITY OF ALBUQUERQUE

January 9, 2009

Jason R. Woodruff, P.E.
Wilson & Company, Inc.
4900 Lang Ave. NE
Albuquerque, NM 87109

Re: Manzano High School Drainage Master Plan
Engineer's Stamp dated 12-12-08 (K22/D020)

Dear Mr. Woodruff,

Based upon the information provided in your submittal received 12-23-08, the above referenced plan is approved for Drainage Master Plan. However, the plan cannot be approved for Grading Permit or Paving Permit because it is not stamped, signed and dated.

In addition:

- Another inlet or two may be required to capture the 44.76 cfs at the upstream end of the proposed storm drain for Phase 3 improvements. Provide the Volume Provided for the new pond.
- The storm drain work in Juan Tabo Blvd will be done per Work Order.

If you have any questions, you can contact me at 924-3695.

Sincerely,

Curtis A. Cherne, P.E.
Senior Engineer, Planning Dept.
Development and Building Services

C: file

PO Box 1293

Albuquerque

NM 87103

www.cabq.gov

DRAINAGE AND TRANSPORTATION INFORMATION SHEET

(REV. 12/05 - AP)

PROJECT TITLE: Manzano HS - DMP ZONE MAP/DRG. FILE#: K-22-Z/D020

DRB#: _____ EPC#: _____ WORK ORDER #: _____

LEGAL DESCRIPTION: SEE exhibits in attached Report

CITY ADDRESS: 12200 Lomas Blvd NE

ENGINEERING FIRM:	Wilson & Company	CONTACT:	Jason Woodruff, PE
ADDRESS:	4900 Lang Ave. NE	PHONE:	505-235-7250
CITY, STATE:	Albuqueruqe, NM	ZIP CODE:	87109
OWNER:	APS	CONTACT:	Tyler Mason
ADDRESS:	915 Oak Street	PHONE:	505-848-8822
CITY, STATE:	Albuqueruque New Mexico	ZIP CODE:	87106
ARCHITECT:	Wilson & Company	CONTACT:	See Engineer Above
ADDRESS:	4900 Lang Ave. NE	PHONE:	505-235-7250
CITY, STATE:	Albuquerque, NM	ZIP CODE:	
SURVEYING FIRM:	Wilson & Company	LICENSED SURVEYOR:	Ben Aragon
ADDRESS:	4900 Lang Ave. NE	PHONE:	505-348-4067
CITY, STATE:	Albuquerque, NM	ZIP CODE:	87109
CONTRACTOR:		CONTACT:	
ADDRESS:		PHONE:	
CITY, STATE:		ZIP CODE:	

CHECK TYPE OF SUBMITTAL:

___ DRAINAGE REPORT - RESUBMITTAL
X DRAINAGE PLAN 1st SUBMITTAL
___ DRAINAGE PLAN RESUBMITTAL
___ CONCEPTUAL GRADING & DRAINAGE PLAN
X GRADING PLAN
___ EROSION CONTROL PLAN
___ ENGINEER'S CERT (HYDROLOGY)
___ CLOMR\LOMR
___ TRAFFIC CIRCULTAION LAYOUT
___ ENGINEER/ARCHITECT CERT (TCL)
___ ENGINEER/ARCHITECT CERT (DRB S. P.)
___ ENGINEER/ARCHITECT CERT (AA)
___ OTHER (SPECIFY)

CHECK TYPE OF APPROVAL SOUGHT:

___ SIA / FINANCIAL GUARANTEE RELEASE
___ PRELIMINARY PLAT APPROVAL
___ S. DEV. PLAN FOR SUB'D. APPROVAL
___ S. DEV. PLAN FOR BLDG. PERMIT APPROVAL
___ SECTOR PLAN APPROVAL
___ FINAL PLAT APPROVAL
___ FOUNDATION PERMIT APPROVAL
___ BUILDING PERMIT APPROVAL
___ CERTIFICATE OF OCCUPANCY (PERM.)
___ CERTIFICATE OF OCCUPANCY (TEMP)
X GRADING PERMIT APPROVAL
X PAVING PERMIT APPROVAL
___ WORK ORDER APPROVAL
___ OTHER (SPECIFY) SO #19

WAS A PRE-DESIGN CONFERENCE ATTENDED:

___ YES
x NO
___ COPY PROVIDED

RECEIVED
DEC 23 '08
HYDROLOGY SECTION

Submitted By: Jason Woodruff DATE: 12-23-08

Requests for approvals of Site Development Plans and/or Subdivision Plats shall be accompanied by a drainage submittal. The particular nature, location and scope of the proposed development define the degree of drainage detail. One or more of the following levels of submittal may be required based on the following:

1. **Conceptual Grading and Drainage Plan:** Required for approval of Site Development Plans greater than five
2. **Drainage Plans:** Required for building permits, grading permits, paving permits and site plans less than five (5)
3. **Drainage Report:** Required for subdivisions containing more than ten (10) lots or constituting five (5) acres or more.

Input

```
*S    AHYMO_97 MODEL FOR: Manzano HS
*S    PREPARED FOR:  APS
*S    PREPARED BY:  Wilson & Co
*S    MODEL DESCRIPTION -
*S 1. 100-YEAR 6-HOUR RAINFALL EVENT
*S 2. THIS MODEL ASSUMES DEVELOPED CONDITIONS
*S
START                TIME=0.0
LOCATION             ALBUQUERQUE
*S***** AHYMO - 1006.HMI
*S***** HYDROLOGY FOR MANZANO ONSITE
*
RAINFALL             TYPE=1 RAIN QUARTER=0.0 IN
                     RAIN ONE=2.23 IN RAIN SIX=2.90 IN
                     RAIN DAY=3.65 IN DT=0.0333 HR

*S***** BASIN 101 - ONSITE EXISTING (5.99 ACRES)

COMPUTE NM HYD       ID=1 HYD NO=101 AREA=0.0094 SQ MI
                     PER A=0 PER B=0 PER C=0 PER D=100
                     TP=0.1333 HR MASS RAINFALL=-1
PRINT HYD            ID=1 CODE=24


*S***** BASIN 102 - ONSITE EXISTING (2.27 ACRES)

COMPUTE NM HYD       ID=2 HYD NO=102 AREA=0.0035 SQ MI
                     PER A=0 PER B=0 PER C=0 PER D=100
                     TP=0.1333 HR MASS RAINFALL=-1
PRINT HYD            ID=2 CODE=24


*S***** BASIN 103 - ONSITE EXISTING (6.12 ACRES)

COMPUTE NM HYD       ID=3 HYD NO=103 AREA=0.00956 SQ MI
                     PER A=35 PER B=15 PER C=0 PER D=50
                     TP=0.1333 HR MASS RAINFALL=-1
PRINT HYD            ID=3 CODE=24

*S***** BASIN 104 - ONSITE EXISTING (1.97 ACRES)

COMPUTE NM HYD       ID=4 HYD NO=104 AREA=0.0031 SQ MI
                     PER A=0 PER B=15 PER C=0 PER D=85
                     TP=0.1333 HR MASS RAINFALL=-1
PRINT HYD            ID=4 CODE=24

*S***** BASIN 105 - ONSITE EXISTING (1.90 ACRES)

COMPUTE NM HYD       ID=5 HYD NO=105 AREA=0.0030 SQ MI
                     PER A=0 PER B=10 PER C=0 PER D=90
                     TP=0.1333 HR MASS RAINFALL=-1
PRINT HYD            ID=5 CODE=24

*S***** BASIN 106 - ONSITE EXISTING (0.39 ACRES)

COMPUTE NM HYD       ID=6 HYD NO=106 AREA=0.0006 SQ MI
                     PER A=0 PER B=5 PER C=0 PER D=95
                     TP=0.1333 HR MASS RAINFALL=-1
PRINT HYD            ID=6 CODE=24

*S***** BASIN 107 - ONSITE EXISTING (0.58 ACRES)

COMPUTE NM HYD       ID=7 HYD NO=107 AREA=0.0009 SQ MI
                     PER A=50 PER B=30 PER C=10 PER D=10
                     TP=0.1333 HR MASS RAINFALL=-1
PRINT HYD            ID=7 CODE=24

*S***** BASIN 110 - ONSITE EXISTING (5.78 ACRES)

COMPUTE NM HYD       ID=10 HYD NO=110 AREA=0.009 SQ MI
                     PER A=0 PER B=10 PER C=0 PER D=90
                     TP=0.1333 HR MASS RAINFALL=-1
PRINT HYD            ID=10 CODE=24

*S***** BASIN 111 - ONSITE EXISTING (0.33 ACRES)

COMPUTE NM HYD       ID=11 HYD NO=111 AREA=0.00051 SQ MI
                     PER A=0 PER B=5 PER C=0 PER D=95
                     TP=0.1333 HR MASS RAINFALL=-1
PRINT HYD            ID=11 CODE=24

*S***** BASIN 112 - ONSITE EXISTING (1.11 ACRES)

COMPUTE NM HYD       ID=12 HYD NO=112 AREA=0.0017 SQ MI
```

```
                    PER A=0 PER B=7 PER C=0 PER D=93
                    TP=0.1333 HR MASS RAINFALL=-1
PRINT HYD           ID=12 CODE=24

*S***** BASIN 113 - ONSITE EXISTING (6.75 ACRES)

COMPUTE NM HYD      ID=13 HYD NO=113 AREA=0.0105 SQ MI
                    PER A=40 PER B=30 PER C=10 PER D=20
                    TP=0.1333 HR MASS RAINFALL=-1
PRINT HYD           ID=13 CODE=24

*S***** BASIN 114 - ONSITE EXISTING (5.54 ACRES)

COMPUTE NM HYD      ID=14 HYD NO=114 AREA=0.0087 SQ MI
                    PER A=35 PER B=30 PER C=20 PER D=15
                    TP=0.1333 HR MASS RAINFALL=-1
PRINT HYD           ID=14 CODE=24

*S***** BASIN 115 - ONSITE EXISTING (4.37 ACRES)

COMPUTE NM HYD      ID=15 HYD NO=115 AREA=0.0068 SQ MI
                    PER A=70 PER B=0 PER C=20 PER D=10
                    TP=0.1333 HR MASS RAINFALL=-1
PRINT HYD           ID=15 CODE=24

*S***** BASIN 120A - ONSITE PROPOSED(1.0 ACRES)
```

3ac 1 ac = 0.00156 sq mi.

```
COMPUTE NM HYD      ID=20 HYD NO=120 AREA=0.0048 SQ MI
                    PER A=0 PER B=0 PER C=5 PER D=95
                    TP=0.1333 HR MASS RAINFALL=-1
PRINT HYD           ID=20 CODE=24

*S***** BASIN 121 - ONSITE EXISTING (2.10 ACRES)

COMPUTE NM HYD      ID=21 HYD NO=121 AREA=0.0033 SQ MI
                    PER A=0 PER B=10 PER C=0 PER D=90
                    TP=0.1333 HR MASS RAINFALL=-1
PRINT HYD           ID=21 CODE=24

*S***** BASIN 122 - ONSITE EXISTING (1.07 ACRES)

COMPUTE NM HYD      ID=22 HYD NO=122 AREA=0.0017 SQ MI
                    PER A=0 PER B=0 PER C=0 PER D=100
                    TP=0.1333 HR MASS RAINFALL=-1
PRINT HYD           ID=22 CODE=24

*S***** BASIN 123 - ONSITE EXISTING (3.44 ACRES)

COMPUTE NM HYD      ID=23 HYD NO=123 AREA=0.0054 SQ MI
                    PER A=0 PER B=5 PER C=0 PER D=95
                    TP=0.1333 HR MASS RAINFALL=-1
PRINT HYD           ID=23 CODE=24

*S***** BASIN 124 - ONSITE EXISTING (6.22 ACRES)

COMPUTE NM HYD      ID=24 HYD NO=124 AREA=0.0097 SQ MI
                    PER A=0 PER B=10 PER C=0 PER D=90
                    TP=0.1333 HR MASS RAINFALL=-1
PRINT HYD           ID=24 CODE=24

*S***** BASIN 130A - ONSITE PROPOSED (1.0 ACRES)

COMPUTE NM HYD      ID=30 HYD NO=130 AREA=0.0021 SQ MI
                    PER A=0 PER B=0 PER C=20 PER D=80
                    TP=0.1333 HR MASS RAINFALL=-1
PRINT HYD           ID=30 CODE=24

*S***** BASIN 131 - ONSITE EXISTING (1.35 ACRES)

COMPUTE NM HYD      ID=31 HYD NO=131 AREA=0.0021 SQ MI
                    PER A=0 PER B=10 PER C=0 PER D=90
                    TP=0.1333 HR MASS RAINFALL=-1
PRINT HYD           ID=31 CODE=24

*S***** BASIN 132 - OFFSITE EXISTING (1.24 ACRES)

COMPUTE NM HYD      ID=32 HYD NO=131 AREA=0.0019 SQ MI
                    PER A=0 PER B=10 PER C=0 PER D=90
                    TP=0.1333 HR MASS RAINFALL=-1
PRINT HYD           ID=32 CODE=24
*****************************************************
*****************************************************
ADD HYD             ID=40 HYD NO=200 ID I=3 ID II=4
PRINT HYD           ID=40 CODE=5
```

```
*****************************************************
ADD HYD              ID=41 HYD NO=201 ID I=40 ID II=5
PRINT HYD            ID=41 CODE=5
*****************************************************
ADD HYD              ID=42 HYD NO=202 ID I=41 ID II=6
PRINT HYD            ID=42 CODE=5
*****************************************************
ADD HYD              ID=43 HYD NO=203 ID I=42 ID II=7
PRINT HYD            ID=43 CODE=5
*****************************************************
*****************************************************
*SEXISTING POND 1 - ADJACENT TO WILSON STADIUM
*****************************************************
*ROUTE RESERVOIR      ID 45 HYD NO=205 IN ID=43 CODE=5
*                     OUTLFOW    STORAGE    ELEVATION
*                      0.00       0.00        5625
*                      0.00       0.03        5626
*                      0.00       0.11        5627
*                      0.00       0.28        5628
*PRINT HYD            ID=45 CODE=5
*****************************************************
*****************************************************
ADD HYD              ID=50 HYD NO=300 ID I=11 ID II=12
PRINT HYD            ID=50 CODE=5
*****************************************************
ADD HYD              ID=51 HYD NO=301 ID I=50 ID II=13
PRINT HYD            ID=51 CODE=5
*****************************************************
ADD HYD              ID=52 HYD NO=302 ID I=51 ID II=14
PRINT HYD            ID=52 CODE=5
*****************************************************
ADD HYD              ID=53 HYD NO=303 ID I=52 ID II=10
PRINT HYD            ID=53 CODE=5
*****************************************************
*****************************************************
ADD HYD              ID=60 HYD NO=400 ID I=20 ID II=21
PRINT HYD            ID=60 CODE=5
*****************************************************
ADD HYD              ID=61 HYD NO=401 ID I=60 ID II=22
PRINT HYD            ID=61 CODE=5
*****************************************************
ADD HYD              ID=62 HYD NO=402 ID I=61 ID II=23
PRINT HYD            ID=62 CODE=5
*****************************************************
*****************************************************
ADD HYD              ID=70 HYD NO=500 ID I=24 ID II=15
PRINT HYD            ID=70 CODE=5
*****************************************************
*****************************************************
ADD HYD              ID=80 HYD NO=600 ID I=70 ID II=62
PRINT HYD            ID=80 CODE=5
*****************************************************
ADD HYD              ID=81 HYD NO=601 ID I=80 ID II=53
PRINT HYD            ID=81 CODE=5
*****************************************************
*****************************************************
*SEXISTING POND 2 - SOCCER FIELD
*****************************************************
ROUTE RESERVOIR      ID 82 HYD NO=700 IN ID=80 CODE=5
                     OUTLFOW    STORAGE    ELEVATION
                       0.00       0.00       5585.0
                       6.02       0.05       5586.0
                       6.83       0.31       5587.0
                       7.56       1.01       5588.0
                       8.22       2.13       5589.0
                       8.53       3.74       2289.5
PRINT HYD            ID=82 CODE=5
*****************************************************
*****************************************************
FINISH
```

Output

```
AHYMO PROGRAM (AHYMO_97) -                                  - Version:  1997.02c
     RUN DATE (MON/DAY/YR) = 02/09/2010
     START TIME (HR:MIN:SEC) = 16:28:52     USER NO.= AHYMO-C-9803c01UNMLIB-AH
     INPUT FILE = M:\IDS\09932B~1\AE_DATA\CALCS\AHYMO\1006PR~1.HMI


*S    AHYMO_97 MODEL FOR: Manzano HS
*S    PREPARED FOR:  APS
*S    PREPARED BY:  Wilson & Co
*S    MODEL DESCRIPTION -
*S 1. 100-YEAR 6-HOUR RAINFALL EVENT
*S 2. THIS MODEL ASSUMES DEVELOPED CONDITIONS
*S
START                TIME=0.0
LOCATION                 ALBUQUERQUE
     City of Albuquerque soil infiltration values (LAND FACTORS) used for computations.
     Land Treatment     Initial Abstr.(in)    Unif. Infilt.(in/hour)
          A                0.65                  1.67
          B                0.50                  1.25
          C                0.35                  0.83
          D                0.10                  0.04

*S***** AHYMO - 1006.HMI
*S***** HYDROLOGY FOR MANZANO ONSITE
*
RAINFALL             TYPE=1 RAIN QUARTER=0.0 IN
                     RAIN ONE=2.23 IN RAIN SIX=2.90 IN
                     RAIN DAY=3.65 IN DT=0.0333 HR


                COMPUTED 6-HOUR RAINFALL DISTRIBUTION BASED ON NOAA ATLAS 2 - PEAK AT 1.40
HR.
                DT =     .033300 HOURS        END TIME =     5.994000 HOURS
                   .0000   .0055   .0110   .0167   .0225   .0284   .0344
                   .0406   .0469   .0534   .0600   .0667   .0737   .0808
                   .0881   .0957   .1034   .1114   .1196   .1281   .1369
                   .1459   .1553   .1651   .1752   .1858   .1968   .2083
                   .2204   .2331   .2465   .2529   .2594   .2665   .2810
                   .3143   .3657   .4396   .5406   .6734   .8430  1.0542
                  1.3121  1.5597  1.6613  1.7468  1.8227  1.8918  1.9553
                  2.0143  2.0694  2.1210  2.1697  2.2155  2.2588  2.2998
                  2.3386  2.3755  2.4104  2.4436  2.4751  2.4845  2.4923
                  2.4998  2.5070  2.5139  2.5206  2.5271  2.5334  2.5396
                  2.5456  2.5514  2.5571  2.5627  2.5681  2.5734  2.5786
                  2.5837  2.5887  2.5937  2.5985  2.6032  2.6079  2.6125
                  2.6170  2.6215  2.6258  2.6301  2.6344  2.6386  2.6427
                  2.6468  2.6508  2.6548  2.6588  2.6626  2.6665  2.6703
                  2.6740  2.6777  2.6814  2.6850  2.6886  2.6921  2.6957
                  2.6991  2.7026  2.7060  2.7094  2.7127  2.7160  2.7193
                  2.7226  2.7258  2.7290  2.7322  2.7354  2.7385  2.7416
                  2.7447  2.7477  2.7507  2.7537  2.7567  2.7597  2.7626
                  2.7655  2.7684  2.7713  2.7741  2.7770  2.7798  2.7826
                  2.7854  2.7881  2.7909  2.7936  2.7963  2.7990  2.8017
                  2.8043  2.8069  2.8096  2.8122  2.8148  2.8173  2.8199
                  2.8225  2.8250  2.8275  2.8300  2.8325  2.8350  2.8375
                  2.8399  2.8423  2.8448  2.8472  2.8496  2.8520  2.8544
                  2.8567  2.8591  2.8614  2.8637  2.8661  2.8684  2.8707
                  2.8730  2.8752  2.8775  2.8798  2.8820  2.8842  2.8865
                  2.8887  2.8909  2.8931  2.8953  2.8974  2.8996

*S***** BASIN 101 - ONSITE EXISTING (5.99 ACRES)

COMPUTE NM HYD       ID=1 HYD NO=101 AREA=0.0094 SQ MI
                     PER A=0 PER B=0 PER C=0 PER D=100
                     TP=0.1333 HR MASS RAINFALL=-1

          K =   .072649HR    TP =   .133300HR    K/TP RATIO =   .545000     SHAPE CONSTANT, N =
7.106420
          UNIT PEAK =   37.112    CFS   UNIT VOLUME =    .9991       B =   526.28      P60 =
2.2300
          AREA =      .009400 SQ MI    IA =    .10000 INCHES    INF =    .04000 INCHES PER HOUR
          RUNOFF COMPUTED BY INITIAL ABSTRACTION/INFILTRATION NUMBER METHOD - DT =   .033300

     PRINT HYD            ID=1 CODE=24

                                        PARTIAL HYDROGRAPH   101.00

          TIME      FLOW          TIME      FLOW          TIME      FLOW          TIME
FLOW          TIME      FLOW
           HRS       CFS            HRS       CFS            HRS       CFS            HRS
CFS           HRS       CFS
           .000        .0          1.998       7.9          3.996        .4          5.994
.4
```

```
          .666        .6          2.664        .9          4.662        .4          6.660
.0
         1.332      10.0          3.330        .5          5.328        .4

     RUNOFF VOLUME =     2.64117 INCHES     =       1.3241 ACRE-FEET
     PEAK DISCHARGE RATE =      31.54 CFS  AT   1.499 HOURS   BASIN AREA =   .0094 SQ. MI.


*S***** BASIN 102 - ONSITE EXISTING (2.27 ACRES)

COMPUTE NM HYD       ID=2 HYD NO=102 AREA=0.0035 SQ MI
                     PER A=0 PER B=0 PER C=0 PER D=100
                     TP=0.1333 HR MASS RAINFALL=-1

          K =   .072649HR    TP =   .133300HR    K/TP RATIO =   .545000     SHAPE CONSTANT, N =
7.106420
          UNIT PEAK =   13.818    CFS   UNIT VOLUME =    .9985       B =   526.28      P60 =
2.2300
          AREA =      .003500 SQ MI    IA =    .10000 INCHES    INF =    .04000 INCHES PER HOUR
          RUNOFF COMPUTED BY INITIAL ABSTRACTION/INFILTRATION NUMBER METHOD - DT =   .033300

     PRINT HYD            ID=2 CODE=24

                                        PARTIAL HYDROGRAPH   102.00

          TIME      FLOW          TIME      FLOW          TIME      FLOW          TIME
FLOW          TIME      FLOW
           HRS       CFS           HRS       CFS           HRS       CFS           HRS
CFS           HRS       CFS
          .000        .0          1.998       2.9         3.996        .2          5.994
.1
          .666        .2          2.664        .3          4.662        .1          6.660
.0
         1.332       3.7          3.330        .2          5.328        .1

     RUNOFF VOLUME =     2.64117 INCHES     =        .4930 ACRE-FEET
     PEAK DISCHARGE RATE =      11.75 CFS  AT   1.499 HOURS   BASIN AREA =   .0035 SQ. MI.


*S***** BASIN 103 - ONSITE EXISTING (6.12 ACRES)

COMPUTE NM HYD       ID=3 HYD NO=103 AREA=0.00956 SQ MI
                     PER A=35 PER B=15 PER C=0 PER D=50
                     TP=0.1333 HR MASS RAINFALL=-1

          K =   .072649HR    TP =   .133300HR    K/TP RATIO =   .545000     SHAPE CONSTANT, N =
7.106420
          UNIT PEAK =   18.872    CFS   UNIT VOLUME =    .9987       B =   526.28      P60 =
2.2300
          AREA =      .004780 SQ MI    IA =    .10000 INCHES    INF =    .04000 INCHES PER HOUR
          RUNOFF COMPUTED BY INITIAL ABSTRACTION/INFILTRATION NUMBER METHOD - DT =   .033300


          K =   .152112HR    TP =   .133300HR    K/TP RATIO =  1.141122     SHAPE CONSTANT, N =
3.103077
          UNIT PEAK =   10.403    CFS   UNIT VOLUME =    .9984       B =   290.12      P60 =
2.2300
          AREA =      .004780 SQ MI    IA =    .60500 INCHES    INF =   1.54400 INCHES PER HOUR
          RUNOFF COMPUTED BY INITIAL ABSTRACTION/INFILTRATION NUMBER METHOD - DT =   .033300

     PRINT HYD            ID=3 CODE=24

                                        PARTIAL HYDROGRAPH   103.00

          TIME      FLOW          TIME      FLOW          TIME      FLOW          TIME
FLOW          TIME      FLOW
           HRS       CFS           HRS       CFS           HRS       CFS           HRS
CFS           HRS       CFS
          .000        .0          1.998       4.8         3.996        .2          5.994
.2
          .666        .3          2.664        .6          4.662        .2          6.660
.0
         1.332       5.7          3.330        .3          5.328        .2

     RUNOFF VOLUME =     1.75685 INCHES     =        .8958 ACRE-FEET
     PEAK DISCHARGE RATE =      23.40 CFS  AT   1.499 HOURS   BASIN AREA =   .0096 SQ. MI.
```

```
*S***** BASIN 104 - ONSITE EXISTING (1.97 ACRES)

COMPUTE NM HYD       ID=4 HYD NO=104 AREA=0.0031 SQ MI
                     PER A=0 PER B=15 PER C=0 PER D=85
                     TP=0.1333 HR MASS RAINFALL=-1

        K =    .072649HR    TP =    .133300HR    K/TP RATIO =    .545000     SHAPE CONSTANT, N =
7.106420
        UNIT PEAK =   10.403    CFS   UNIT VOLUME =    .9982       B =   526.28      P60 =
2.2300
        AREA =       .002635 SQ MI    IA =    .10000 INCHES    INF =    .04000 INCHES PER HOUR
        RUNOFF COMPUTED BY INITIAL ABSTRACTION/INFILTRATION NUMBER METHOD - DT =   .033300

        K =    .134742HR    TP =    .133300HR    K/TP RATIO =  1.010815     SHAPE CONSTANT, N =
3.492236
        UNIT PEAK =   1.1155    CFS   UNIT VOLUME =    .9881       B =   319.76      P60 =
2.2300
        AREA =       .000465 SQ MI    IA =    .50000 INCHES    INF =   1.25000 INCHES PER HOUR
        RUNOFF COMPUTED BY INITIAL ABSTRACTION/INFILTRATION NUMBER METHOD - DT =   .033300

PRINT HYD            ID=4 CODE=24

                                   PARTIAL HYDROGRAPH   104.00

        TIME      FLOW           TIME      FLOW           TIME      FLOW           TIME
FLOW          TIME      FLOW
         HRS       CFS            HRS       CFS            HRS       CFS            HRS
CFS          HRS       CFS
        .000        .0           1.998       2.3          3.996        .1          5.994
.1
        .666        .2           2.664        .3          4.662        .1          6.660
.0
       1.332       2.9           3.330        .1          5.328        .1

      RUNOFF VOLUME =     2.40640 INCHES     =        .3979 ACRE-FEET
      PEAK DISCHARGE RATE =       9.73 CFS  AT   1.499 HOURS   BASIN AREA =   .0031 SQ. MI.

*S***** BASIN 105 - ONSITE EXISTING (1.90 ACRES)

COMPUTE NM HYD       ID=5 HYD NO=105 AREA=0.0030 SQ MI
                     PER A=0 PER B=10 PER C=0 PER D=90
                     TP=0.1333 HR MASS RAINFALL=-1

        K =    .072649HR    TP =    .133300HR    K/TP RATIO =    .545000     SHAPE CONSTANT, N =
7.106420
        UNIT PEAK =   10.660    CFS   UNIT VOLUME =    .9982       B =   526.28      P60 =
2.2300
        AREA =       .002700 SQ MI    IA =    .10000 INCHES    INF =    .04000 INCHES PER HOUR
        RUNOFF COMPUTED BY INITIAL ABSTRACTION/INFILTRATION NUMBER METHOD - DT =   .033300

        K =    .134742HR    TP =    .133300HR    K/TP RATIO =  1.010815     SHAPE CONSTANT, N =
3.492236
        UNIT PEAK =   .71965    CFS   UNIT VOLUME =    .9804       B =   319.76      P60 =
2.2300
        AREA =       .000300 SQ MI    IA =    .50000 INCHES    INF =   1.25000 INCHES PER HOUR
        RUNOFF COMPUTED BY INITIAL ABSTRACTION/INFILTRATION NUMBER METHOD - DT =   .033300

PRINT HYD            ID=5 CODE=24

                                   PARTIAL HYDROGRAPH   105.00

        TIME      FLOW           TIME      FLOW           TIME      FLOW           TIME
FLOW          TIME      FLOW
         HRS       CFS            HRS       CFS            HRS       CFS            HRS
CFS          HRS       CFS
        .000        .0           1.998       2.3          3.996        .1          5.994
.1
        .666        .2           2.664        .3          4.662        .1          6.660
.0
       1.332       2.9           3.330        .1          5.328        .1

      RUNOFF VOLUME =     2.48466 INCHES     =        .3975 ACRE-FEET
      PEAK DISCHARGE RATE =       9.64 CFS  AT   1.499 HOURS   BASIN AREA =   .0030 SQ. MI.
```

```
*S***** BASIN 106 - ONSITE EXISTING (0.39 ACRES)

COMPUTE NM HYD       ID=6 HYD NO=106 AREA=0.0006 SQ MI
                     PER A=0 PER B=5 PER C=0 PER D=95
                     TP=0.1333 HR MASS RAINFALL=-1

        K =   .072649HR    TP =   .133300HR    K/TP RATIO =   .545000     SHAPE CONSTANT, N =
7.106420
        UNIT PEAK =   2.2504    CFS   UNIT VOLUME =    .9941       B =   526.28      P60 =
2.2300
        AREA =      .000570 SQ MI    IA =    .10000 INCHES    INF =    .04000 INCHES PER HOUR
        RUNOFF COMPUTED BY INITIAL ABSTRACTION/INFILTRATION NUMBER METHOD - DT =   .033300

        K =   .134742HR    TP =   .133300HR    K/TP RATIO =  1.010815     SHAPE CONSTANT, N =
3.492236
        UNIT PEAK =   .71965E-01CFS   UNIT VOLUME =    .8677       B =   319.76      P60 =
2.2300
        AREA =      .000030 SQ MI    IA =    .50000 INCHES    INF =   1.25000 INCHES PER HOUR
        RUNOFF COMPUTED BY INITIAL ABSTRACTION/INFILTRATION NUMBER METHOD - DT =   .033300

PRINT HYD            ID=6 CODE=24

                                   PARTIAL HYDROGRAPH   106.00

        TIME      FLOW           TIME      FLOW           TIME      FLOW           TIME
FLOW          TIME      FLOW
         HRS       CFS            HRS       CFS            HRS       CFS            HRS
CFS           HRS       CFS
        .000        .0          1.332        .6          2.664        .1          3.996
.0        5.328        .0
        .666        .0          1.998        .5          3.330        .0          4.662
.0        5.994        .0

       RUNOFF VOLUME =     2.56291 INCHES     =        .0820 ACRE-FEET
       PEAK DISCHARGE RATE =       1.99 CFS  AT   1.499 HOURS   BASIN AREA =   .0006 SQ. MI.


*S***** BASIN 107 - ONSITE EXISTING (0.58 ACRES)

COMPUTE NM HYD       ID=7 HYD NO=107 AREA=0.0009 SQ MI
                     PER A=50 PER B=30 PER C=10 PER D=10
                     TP=0.1333 HR MASS RAINFALL=-1

        K =   .072649HR    TP =   .133300HR    K/TP RATIO =   .545000     SHAPE CONSTANT, N =
7.106420
        UNIT PEAK =   .35532    CFS   UNIT VOLUME =    .9663       B =   526.28      P60 =
2.2300
        AREA =      .000090 SQ MI    IA =    .10000 INCHES    INF =    .04000 INCHES PER HOUR
        RUNOFF COMPUTED BY INITIAL ABSTRACTION/INFILTRATION NUMBER METHOD - DT =   .033300

        K =   .145770HR    TP =   .133300HR    K/TP RATIO =  1.093549     SHAPE CONSTANT, N =
3.231762
        UNIT PEAK =   1.8242    CFS   UNIT VOLUME =    .9921       B =   300.20      P60 =
2.2300
        AREA =      .000810 SQ MI    IA =    .56667 INCHES    INF =   1.43667 INCHES PER HOUR
        RUNOFF COMPUTED BY INITIAL ABSTRACTION/INFILTRATION NUMBER METHOD - DT =   .033300

PRINT HYD            ID=7 CODE=24

                                   PARTIAL HYDROGRAPH   107.00

        TIME      FLOW           TIME      FLOW           TIME      FLOW           TIME
FLOW          TIME      FLOW
         HRS       CFS            HRS       CFS            HRS       CFS            HRS
CFS           HRS       CFS
        .000        .0          1.332        .2          2.664        .0          3.996
.0        5.328        .0
        .666        .0          1.998        .2          3.330        .0          4.662
.0        5.994        .0

       RUNOFF VOLUME =     1.11250 INCHES     =        .0534 ACRE-FEET
       PEAK DISCHARGE RATE =       1.66 CFS  AT   1.499 HOURS   BASIN AREA =   .0009 SQ. MI.


*S***** BASIN 110 - ONSITE EXISTING (5.78 ACRES)

COMPUTE NM HYD       ID=10 HYD NO=110 AREA=0.009 SQ MI
                     PER A=0 PER B=10 PER C=0 PER D=90
```

```
TP=0.1333 HR MASS RAINFALL=-1

K =   .072649HR    TP =   .133300HR    K/TP RATIO =   .545000     SHAPE CONSTANT, N =
7.106420
UNIT PEAK =   31.979    CFS   UNIT VOLUME =    .9990       B =   526.28      P60 =
2.2300
AREA =      .008100 SQ MI    IA =    .10000 INCHES    INF =    .04000 INCHES PER HOUR
RUNOFF COMPUTED BY INITIAL ABSTRACTION/INFILTRATION NUMBER METHOD - DT =   .033300

K =   .134742HR    TP =   .133300HR    K/TP RATIO =  1.010815     SHAPE CONSTANT, N =
3.492236
UNIT PEAK =   2.1589    CFS   UNIT VOLUME =    .9940       B =   319.76      P60 =
2.2300
AREA =      .000900 SQ MI    IA =    .50000 INCHES    INF =   1.25000 INCHES PER HOUR
RUNOFF COMPUTED BY INITIAL ABSTRACTION/INFILTRATION NUMBER METHOD - DT =   .033300

PRINT HYD           ID=10 CODE=24

                                PARTIAL HYDROGRAPH   110.00

          TIME      FLOW           TIME      FLOW           TIME      FLOW           TIME
FLOW          TIME      FLOW
           HRS       CFS            HRS       CFS            HRS       CFS            HRS
CFS           HRS       CFS
           .000        .0          1.998       7.0          3.996        .4          5.994
.3
           .666        .5          2.664        .8          4.662        .3          6.660
.0
          1.332       8.8          3.330        .4          5.328        .3

     RUNOFF VOLUME =     2.48466 INCHES     =       1.1926 ACRE-FEET
     PEAK DISCHARGE RATE =      28.87 CFS  AT   1.499 HOURS   BASIN AREA =   .0090 SQ. MI.


*S***** BASIN 111 - ONSITE EXISTING (0.33 ACRES)

COMPUTE NM HYD      ID=11 HYD NO=111 AREA=0.00051 SQ MI
                    PER A=0 PER B=5 PER C=0 PER D=95
                    TP=0.1333 HR MASS RAINFALL=-1

K =   .072649HR    TP =   .133300HR    K/TP RATIO =   .545000     SHAPE CONSTANT, N =
7.106420
UNIT PEAK =   1.9128    CFS   UNIT VOLUME =    .9932       B =   526.28      P60 =
2.2300
AREA =      .000485 SQ MI    IA =    .10000 INCHES    INF =    .04000 INCHES PER HOUR
RUNOFF COMPUTED BY INITIAL ABSTRACTION/INFILTRATION NUMBER METHOD - DT =   .033300

K =   .134742HR    TP =   .133300HR    K/TP RATIO =  1.010815     SHAPE CONSTANT, N =
3.492236
UNIT PEAK =   .61170E-01CFS   UNIT VOLUME =    .8677       B =   319.76      P60 =
2.2300
AREA =      .000026 SQ MI    IA =    .50000 INCHES    INF =   1.25000 INCHES PER HOUR
RUNOFF COMPUTED BY INITIAL ABSTRACTION/INFILTRATION NUMBER METHOD - DT =   .033300

PRINT HYD           ID=11 CODE=24

                                PARTIAL HYDROGRAPH   111.00

          TIME      FLOW           TIME      FLOW           TIME      FLOW           TIME
FLOW          TIME      FLOW
           HRS       CFS            HRS       CFS            HRS       CFS            HRS
CFS           HRS       CFS
           .000        .0          1.332        .5          2.664        .0          3.996
.0          5.328        .0
           .666        .0          1.998        .4          3.330        .0          4.662
.0          5.994        .0

     RUNOFF VOLUME =     2.56291 INCHES     =        .0697 ACRE-FEET
     PEAK DISCHARGE RATE =       1.69 CFS  AT   1.499 HOURS   BASIN AREA =   .0005 SQ. MI.


*S***** BASIN 112 - ONSITE EXISTING (1.11 ACRES)

COMPUTE NM HYD      ID=12 HYD NO=112 AREA=0.0017 SQ MI
                    PER A=0 PER B=7 PER C=0 PER D=93
                    TP=0.1333 HR MASS RAINFALL=-1

K =   .072649HR    TP =   .133300HR    K/TP RATIO =   .545000     SHAPE CONSTANT, N =
```

```
7.106420
          UNIT PEAK =   6.2419    CFS   UNIT VOLUME =    .9975       B =   526.28      P60 =
2.2300
          AREA =      .001581 SQ MI    IA =    .10000 INCHES    INF =    .04000 INCHES PER HOUR
          RUNOFF COMPUTED BY INITIAL ABSTRACTION/INFILTRATION NUMBER METHOD - DT =   .033300

          K =   .134742HR    TP =   .133300HR    K/TP RATIO =  1.010815     SHAPE CONSTANT, N =
3.492236
          UNIT PEAK =   .28546    CFS   UNIT VOLUME =    .9510       B =   319.76      P60 =
2.2300
          AREA =      .000119 SQ MI    IA =    .50000 INCHES    INF =   1.25000 INCHES PER HOUR
          RUNOFF COMPUTED BY INITIAL ABSTRACTION/INFILTRATION NUMBER METHOD - DT =   .033300

     PRINT HYD           ID=12 CODE=24

                                        PARTIAL HYDROGRAPH   112.00

          TIME      FLOW           TIME      FLOW           TIME      FLOW           TIME
FLOW           TIME      FLOW
           HRS       CFS            HRS       CFS            HRS       CFS            HRS
CFS            HRS       CFS
           .000        .0          1.998       1.4          3.996        .1          5.994
.1
           .666        .1          2.664        .1          4.662        .1          6.660
.0
          1.332       1.7          3.330        .1          5.328        .1

         RUNOFF VOLUME =     2.53161 INCHES     =        .2295 ACRE-FEET
         PEAK DISCHARGE RATE =       5.55 CFS  AT   1.499 HOURS   BASIN AREA =   .0017 SQ. MI.


     *S***** BASIN 113 - ONSITE EXISTING (6.75 ACRES)

     COMPUTE NM HYD      ID=13 HYD NO=113 AREA=0.0105 SQ MI
                         PER A=40 PER B=30 PER C=10 PER D=20
                         TP=0.1333 HR MASS RAINFALL=-1

          K =   .072649HR    TP =   .133300HR    K/TP RATIO =   .545000     SHAPE CONSTANT, N =
7.106420
          UNIT PEAK =   8.2909    CFS   UNIT VOLUME =    .9980       B =   526.28      P60 =
2.2300
          AREA =      .002100 SQ MI    IA =    .10000 INCHES    INF =    .04000 INCHES PER HOUR
          RUNOFF COMPUTED BY INITIAL ABSTRACTION/INFILTRATION NUMBER METHOD - DT =   .033300

          K =   .144047HR    TP =   .133300HR    K/TP RATIO =  1.080622     SHAPE CONSTANT, N =
3.269186
          UNIT PEAK =   19.099    CFS   UNIT VOLUME =    .9994       B =   303.08      P60 =
2.2300
          AREA =      .008400 SQ MI    IA =    .55625 INCHES    INF =   1.40750 INCHES PER HOUR
          RUNOFF COMPUTED BY INITIAL ABSTRACTION/INFILTRATION NUMBER METHOD - DT =   .033300

     PRINT HYD           ID=13 CODE=24

                                        PARTIAL HYDROGRAPH   113.00

          TIME      FLOW           TIME      FLOW           TIME      FLOW           TIME
FLOW           TIME      FLOW
           HRS       CFS            HRS       CFS            HRS       CFS            HRS
CFS            HRS       CFS
           .000        .0          1.998       3.2          3.996        .1          5.994
.1
           .666        .1          2.664        .5          4.662        .1          6.660
.0
          1.332       3.7          3.330        .2          5.328        .1

         RUNOFF VOLUME =     1.29847 INCHES     =        .7271 ACRE-FEET
         PEAK DISCHARGE RATE =      21.25 CFS  AT   1.499 HOURS   BASIN AREA =   .0105 SQ. MI.


     *S***** BASIN 114 - ONSITE EXISTING (5.54 ACRES)

     COMPUTE NM HYD      ID=14 HYD NO=114 AREA=0.0087 SQ MI
                         PER A=35 PER B=30 PER C=20 PER D=15
                         TP=0.1333 HR MASS RAINFALL=-1

          K =   .072649HR    TP =   .133300HR    K/TP RATIO =   .545000     SHAPE CONSTANT, N =
7.106420
          UNIT PEAK =   5.1522    CFS   UNIT VOLUME =    .9972       B =   526.28      P60 =
```

```
2.2300
        AREA =       .001305 SQ MI    IA =    .10000 INCHES    INF =    .04000 INCHES PER HOUR
        RUNOFF COMPUTED BY INITIAL ABSTRACTION/INFILTRATION NUMBER METHOD - DT =   .033300

        K =   .139121HR    TP =   .133300HR    K/TP RATIO =  1.043665     SHAPE CONSTANT, N =
3.382617
        UNIT PEAK =   17.290    CFS   UNIT VOLUME =    .9992       B =   311.66      P60 =
2.2300
        AREA =       .007395 SQ MI    IA =    .52647 INCHES    INF =   1.32412 INCHES PER HOUR
        RUNOFF COMPUTED BY INITIAL ABSTRACTION/INFILTRATION NUMBER METHOD - DT =   .033300

    PRINT HYD           ID=14 CODE=24

                                    PARTIAL HYDROGRAPH   114.00

        TIME      FLOW            TIME      FLOW            TIME      FLOW            TIME
FLOW          TIME      FLOW
         HRS       CFS             HRS       CFS             HRS       CFS             HRS
CFS          HRS       CFS
        .000        .0          1.998       2.5           3.996        .1          5.994
.1
        .666        .1          2.664        .4           4.662        .1          6.660
.0
       1.332       3.0          3.330        .1           5.328        .1

       RUNOFF VOLUME =     1.26442 INCHES     =        .5867 ACRE-FEET
       PEAK DISCHARGE RATE =      17.58 CFS  AT   1.499 HOURS   BASIN AREA =   .0087 SQ. MI.


    *S***** BASIN 115 - ONSITE EXISTING (4.37 ACRES)

    COMPUTE NM HYD      ID=15 HYD NO=115 AREA=0.0068 SQ MI
                        PER A=70 PER B=0 PER C=20 PER D=10
                        TP=0.1333 HR MASS RAINFALL=-1

        K =   .072649HR    TP =   .133300HR    K/TP RATIO =   .545000     SHAPE CONSTANT, N =
7.106420
        UNIT PEAK =    2.6847    CFS   UNIT VOLUME =    .9948       B =   526.28      P60 =
2.2300
        AREA =       .000680 SQ MI    IA =    .10000 INCHES    INF =    .04000 INCHES PER HOUR
        RUNOFF COMPUTED BY INITIAL ABSTRACTION/INFILTRATION NUMBER METHOD - DT =   .033300

        K =   .148527HR    TP =   .133300HR    K/TP RATIO =  1.114233     SHAPE CONSTANT, N =
3.174127
        UNIT PEAK =   13.577    CFS   UNIT VOLUME =    .9990       B =   295.72      P60 =
2.2300
        AREA =       .006120 SQ MI    IA =    .58333 INCHES    INF =   1.48333 INCHES PER HOUR
        RUNOFF COMPUTED BY INITIAL ABSTRACTION/INFILTRATION NUMBER METHOD - DT =   .033300

    PRINT HYD           ID=15 CODE=24

                                    PARTIAL HYDROGRAPH   115.00

        TIME      FLOW            TIME      FLOW            TIME      FLOW            TIME
FLOW          TIME      FLOW
         HRS       CFS             HRS       CFS             HRS       CFS             HRS
CFS          HRS       CFS
        .000        .0          1.332       1.6           2.664        .3          3.996
.0       5.328        .0
        .666        .0          1.998       1.6           3.330        .1          4.662
.0       5.994        .0

       RUNOFF VOLUME =     1.08440 INCHES     =        .3933 ACRE-FEET
       PEAK DISCHARGE RATE =      12.11 CFS  AT   1.499 HOURS   BASIN AREA =   .0068 SQ. MI.


    *S***** BASIN 120A - ONSITE PROPOSED(1.0 ACRES)

    COMPUTE NM HYD      ID=20 HYD NO=120 AREA=0.0048 SQ MI
                        PER A=0 PER B=0 PER C=5 PER D=95
                        TP=0.1333 HR MASS RAINFALL=-1

        K =   .072649HR    TP =   .133300HR    K/TP RATIO =   .545000     SHAPE CONSTANT, N =
7.106420
        UNIT PEAK =   18.003    CFS   UNIT VOLUME =    .9987       B =   526.28      P60 =
2.2300
        AREA =       .004560 SQ MI    IA =    .10000 INCHES    INF =    .04000 INCHES PER HOUR
        RUNOFF COMPUTED BY INITIAL ABSTRACTION/INFILTRATION NUMBER METHOD - DT =   .033300
```

```
          K =    .109928HR    TP =    .133300HR    K/TP RATIO =    .824663     SHAPE CONSTANT, N =
4.329256
          UNIT PEAK =    .67797    CFS   UNIT VOLUME =    .9819       B =   376.56      P60 =
2.2300
          AREA =       .000240 SQ MI    IA =    .35000 INCHES    INF =    .83000 INCHES PER HOUR
          RUNOFF COMPUTED BY INITIAL ABSTRACTION/INFILTRATION NUMBER METHOD - DT =   .033300

     PRINT HYD           ID=20 CODE=24

                                        PARTIAL HYDROGRAPH   120.00

          TIME      FLOW           TIME      FLOW           TIME      FLOW           TIME
FLOW          TIME      FLOW
           HRS       CFS            HRS       CFS            HRS       CFS            HRS
CFS           HRS       CFS
          .000        .0           1.998       3.9          3.996        .2          5.994
.2
          .666        .3           2.664        .5          4.662        .2          6.660
.0
         1.332       5.0           3.330        .2          5.328        .2

        RUNOFF VOLUME =     2.58178 INCHES     =        .6609 ACRE-FEET
        PEAK DISCHARGE RATE =      15.89 CFS  AT   1.499 HOURS   BASIN AREA =   .0048 SQ. MI.


     *S***** BASIN 121 - ONSITE EXISTING (2.10 ACRES)

     COMPUTE NM HYD      ID=21 HYD NO=121 AREA=0.0033 SQ MI
                         PER A=0 PER B=10 PER C=0 PER D=90
                         TP=0.1333 HR MASS RAINFALL=-1

          K =    .072649HR    TP =    .133300HR    K/TP RATIO =    .545000     SHAPE CONSTANT, N =
7.106420
          UNIT PEAK =   11.726    CFS   UNIT VOLUME =    .9984       B =   526.28      P60 =
2.2300
          AREA =       .002970 SQ MI    IA =    .10000 INCHES    INF =    .04000 INCHES PER HOUR
          RUNOFF COMPUTED BY INITIAL ABSTRACTION/INFILTRATION NUMBER METHOD - DT =   .033300

          K =    .134742HR    TP =    .133300HR    K/TP RATIO =  1.010815     SHAPE CONSTANT, N =
3.492236
          UNIT PEAK =    .79161    CFS   UNIT VOLUME =    .9834       B =   319.76      P60 =
2.2300
          AREA =       .000330 SQ MI    IA =    .50000 INCHES    INF =   1.25000 INCHES PER HOUR
          RUNOFF COMPUTED BY INITIAL ABSTRACTION/INFILTRATION NUMBER METHOD - DT =   .033300

     PRINT HYD           ID=21 CODE=24

                                        PARTIAL HYDROGRAPH   121.00

          TIME      FLOW           TIME      FLOW           TIME      FLOW           TIME
FLOW          TIME      FLOW
           HRS       CFS            HRS       CFS            HRS       CFS            HRS
CFS           HRS       CFS
          .000        .0           1.998       2.6          3.996        .1          5.994
.1
          .666        .2           2.664        .3          4.662        .1          6.660
.0
         1.332       3.2           3.330        .2          5.328        .1

        RUNOFF VOLUME =     2.48466 INCHES     =        .4373 ACRE-FEET
        PEAK DISCHARGE RATE =      10.60 CFS  AT   1.499 HOURS   BASIN AREA =   .0033 SQ. MI.


     *S***** BASIN 122 - ONSITE EXISTING (1.07 ACRES)

     COMPUTE NM HYD      ID=22 HYD NO=122 AREA=0.0017 SQ MI
                         PER A=0 PER B=0 PER C=0 PER D=100
                         TP=0.1333 HR MASS RAINFALL=-1

          K =    .072649HR    TP =    .133300HR    K/TP RATIO =    .545000     SHAPE CONSTANT, N =
7.106420
          UNIT PEAK =    6.7117    CFS   UNIT VOLUME =    .9975       B =   526.28      P60 =
2.2300
          AREA =       .001700 SQ MI    IA =    .10000 INCHES    INF =    .04000 INCHES PER HOUR
          RUNOFF COMPUTED BY INITIAL ABSTRACTION/INFILTRATION NUMBER METHOD - DT =   .033300

     PRINT HYD           ID=22 CODE=24
```

PARTIAL HYDROGRAPH 122.00

TIME HRS	FLOW CFS	TIME HRS	FLOW CFS	TIME HRS	FLOW CFS	TIME HRS
.000	.0	1.998	1.4	3.996	.1	5.994
.666	.1	2.664	.2	4.662	.1	6.660
1.332	1.8	3.330	.1	5.328	.1	

RUNOFF VOLUME = 2.64117 INCHES = .2395 ACRE-FEET
PEAK DISCHARGE RATE = 5.71 CFS AT 1.499 HOURS BASIN AREA = .0017 SQ. MI.

*S***** BASIN 123 - ONSITE EXISTING (3.44 ACRES)

COMPUTE NM HYD ID=23 HYD NO=123 AREA=0.0054 SQ MI
PER A=0 PER B=5 PER C=0 PER D=95
TP=0.1333 HR MASS RAINFALL=-1

K = .072649HR TP = .133300HR K/TP RATIO = .545000 SHAPE CONSTANT, N = 7.106420
UNIT PEAK = 20.254 CFS UNIT VOLUME = .9988 B = 526.28 P60 = 2.2300
AREA = .005130 SQ MI IA = .10000 INCHES INF = .04000 INCHES PER HOUR
RUNOFF COMPUTED BY INITIAL ABSTRACTION/INFILTRATION NUMBER METHOD - DT = .033300

K = .134742HR TP = .133300HR K/TP RATIO = 1.010815 SHAPE CONSTANT, N = 3.492236
UNIT PEAK = .64768 CFS UNIT VOLUME = .9786 B = 319.76 P60 = 2.2300
AREA = .000270 SQ MI IA = .50000 INCHES INF = 1.25000 INCHES PER HOUR
RUNOFF COMPUTED BY INITIAL ABSTRACTION/INFILTRATION NUMBER METHOD - DT = .033300

PRINT HYD ID=23 CODE=24

PARTIAL HYDROGRAPH 123.00

TIME HRS	FLOW CFS	TIME HRS	FLOW CFS	TIME HRS	FLOW CFS	TIME HRS
.000	.0	1.998	4.4	3.996	.2	5.994
.666	.3	2.664	.5	4.662	.2	6.660
1.332	5.5	3.330	.3	5.328	.2	

RUNOFF VOLUME = 2.56291 INCHES = .7381 ACRE-FEET
PEAK DISCHARGE RATE = 17.73 CFS AT 1.499 HOURS BASIN AREA = .0054 SQ. MI.

*S***** BASIN 124 - ONSITE EXISTING (6.22 ACRES)

COMPUTE NM HYD ID=24 HYD NO=124 AREA=0.0097 SQ MI
PER A=0 PER B=10 PER C=0 PER D=90
TP=0.1333 HR MASS RAINFALL=-1

K = .072649HR TP = .133300HR K/TP RATIO = .545000 SHAPE CONSTANT, N = 7.106420
UNIT PEAK = 34.466 CFS UNIT VOLUME = .9990 B = 526.28 P60 = 2.2300
AREA = .008730 SQ MI IA = .10000 INCHES INF = .04000 INCHES PER HOUR
RUNOFF COMPUTED BY INITIAL ABSTRACTION/INFILTRATION NUMBER METHOD - DT = .033300

K = .134742HR TP = .133300HR K/TP RATIO = 1.010815 SHAPE CONSTANT, N = 3.492236
UNIT PEAK = 2.3269 CFS UNIT VOLUME = .9945 B = 319.76 P60 = 2.2300
AREA = .000970 SQ MI IA = .50000 INCHES INF = 1.25000 INCHES PER HOUR
RUNOFF COMPUTED BY INITIAL ABSTRACTION/INFILTRATION NUMBER METHOD - DT = .033300

PRINT HYD ID=24 CODE=24

PARTIAL HYDROGRAPH 124.00

TIME HRS	FLOW CFS	TIME HRS	FLOW CFS	TIME HRS	FLOW CFS	TIME HRS
.000	.0	1.998	7.5	3.996	.4	5.994
.666	.6	2.664	.9	4.662	.4	6.660
1.332	9.5	3.330	.5	5.328	.4	

RUNOFF VOLUME = 2.48466 INCHES = 1.2854 ACRE-FEET
PEAK DISCHARGE RATE = 31.11 CFS AT 1.499 HOURS BASIN AREA = .0097 SQ. MI.

*S***** BASIN 130A - ONSITE PROPOSED (1.0 ACRES)

COMPUTE NM HYD ID=30 HYD NO=130 AREA=0.0021 SQ MI
PER A=0 PER B=0 PER C=20 PER D=80
TP=0.1333 HR MASS RAINFALL=-1

K = .072649HR TP = .133300HR K/TP RATIO = .545000 SHAPE CONSTANT, N = 7.106420
UNIT PEAK = 6.6327 CFS UNIT VOLUME = .9975 B = 526.28 P60 = 2.2300
AREA = .001680 SQ MI IA = .10000 INCHES INF = .04000 INCHES PER HOUR
RUNOFF COMPUTED BY INITIAL ABSTRACTION/INFILTRATION NUMBER METHOD - DT = .033300

K = .109928HR TP = .133300HR K/TP RATIO = .824663 SHAPE CONSTANT, N = 4.329256
UNIT PEAK = 1.1865 CFS UNIT VOLUME = .9892 B = 376.56 P60 = 2.2300
AREA = .000420 SQ MI IA = .35000 INCHES INF = .83000 INCHES PER HOUR
RUNOFF COMPUTED BY INITIAL ABSTRACTION/INFILTRATION NUMBER METHOD - DT = .033300

PRINT HYD ID=30 CODE=24

PARTIAL HYDROGRAPH 130.00

TIME HRS	FLOW CFS	TIME HRS	FLOW CFS	TIME HRS	FLOW CFS	TIME HRS
.000	.0	1.998	1.6	3.996	.1	5.994
.666	.1	2.664	.2	4.662	.1	6.660
1.332	2.0	3.330	.1	5.328	.1	

RUNOFF VOLUME = 2.40360 INCHES = .2692 ACRE-FEET
PEAK DISCHARGE RATE = 6.66 CFS AT 1.499 HOURS BASIN AREA = .0021 SQ. MI.

*S***** BASIN 131 - ONSITE EXISTING (1.35 ACRES)

COMPUTE NM HYD ID=31 HYD NO=131 AREA=0.0021 SQ MI
PER A=0 PER B=10 PER C=0 PER D=90
TP=0.1333 HR MASS RAINFALL=-1

K = .072649HR TP = .133300HR K/TP RATIO = .545000 SHAPE CONSTANT, N = 7.106420
UNIT PEAK = 7.4618 CFS UNIT VOLUME = .9978 B = 526.28 P60 = 2.2300
AREA = .001890 SQ MI IA = .10000 INCHES INF = .04000 INCHES PER HOUR
RUNOFF COMPUTED BY INITIAL ABSTRACTION/INFILTRATION NUMBER METHOD - DT = .033300

K = .134742HR TP = .133300HR K/TP RATIO = 1.010815 SHAPE CONSTANT, N = 3.492236
UNIT PEAK = .50375 CFS UNIT VOLUME = .9726 B = 319.76 P60 = 2.2300
AREA = .000210 SQ MI IA = .50000 INCHES INF = 1.25000 INCHES PER HOUR
RUNOFF COMPUTED BY INITIAL ABSTRACTION/INFILTRATION NUMBER METHOD - DT = .033300

PRINT HYD ID=31 CODE=24

PARTIAL HYDROGRAPH 131.00

TIME FLOW TIME FLOW TIME FLOW TIME

```
FLOW          TIME      FLOW
          HRS       CFS            HRS       CFS            HRS       CFS            HRS
CFS           HRS       CFS
          .000        .0          1.998       1.6          3.996        .1          5.994
.1
          .666        .1          2.664        .2          4.662        .1          6.660
.0
         1.332       2.1          3.330        .1          5.328        .1

        RUNOFF VOLUME =     2.48466 INCHES     =        .2783 ACRE-FEET
        PEAK DISCHARGE RATE =       6.75 CFS  AT   1.499 HOURS   BASIN AREA =   .0021 SQ. MI.


     *S***** BASIN 132 - OFFSITE EXISTING (1.24 ACRES)

     COMPUTE NM HYD       ID=32 HYD NO=131 AREA=0.0019 SQ MI
                          PER A=0 PER B=10 PER C=0 PER D=90
                          TP=0.1333 HR MASS RAINFALL=-1

        K =   .072649HR    TP =   .133300HR    K/TP RATIO =   .545000     SHAPE CONSTANT, N =
7.106420
        UNIT PEAK =   6.7512    CFS   UNIT VOLUME =    .9975       B =   526.28      P60 =
2.2300
        AREA =      .001710 SQ MI    IA =    .10000 INCHES    INF =    .04000 INCHES PER HOUR
        RUNOFF COMPUTED BY INITIAL ABSTRACTION/INFILTRATION NUMBER METHOD - DT =   .033300

        K =   .134742HR    TP =   .133300HR    K/TP RATIO =  1.010815     SHAPE CONSTANT, N =
3.492236
        UNIT PEAK =   .45578    CFS   UNIT VOLUME =    .9702       B =   319.76      P60 =
2.2300
        AREA =      .000190 SQ MI    IA =    .50000 INCHES    INF =   1.25000 INCHES PER HOUR
        RUNOFF COMPUTED BY INITIAL ABSTRACTION/INFILTRATION NUMBER METHOD - DT =   .033300

     PRINT HYD            ID=32 CODE=24

                                     PARTIAL HYDROGRAPH   131.00

        TIME      FLOW            TIME      FLOW            TIME      FLOW            TIME
FLOW          TIME      FLOW
          HRS       CFS            HRS       CFS            HRS       CFS            HRS
CFS           HRS       CFS
          .000        .0          1.998       1.5          3.996        .1          5.994
.1
          .666        .1          2.664        .2          4.662        .1          6.660
.0
         1.332       1.9          3.330        .1          5.328        .1

        RUNOFF VOLUME =     2.48466 INCHES     =        .2518 ACRE-FEET
        PEAK DISCHARGE RATE =       6.11 CFS  AT   1.499 HOURS   BASIN AREA =   .0019 SQ. MI.


     ************************************************************
     ************************************************************
     ADD HYD              ID=40 HYD NO=200 ID I=3 ID II=4
     PRINT HYD            ID=40 CODE=5

                                     PARTIAL HYDROGRAPH   200.00

        TIME      FLOW            TIME      FLOW            TIME      FLOW            TIME
FLOW          TIME      FLOW
          HRS       CFS            HRS       CFS            HRS       CFS            HRS
CFS           HRS       CFS
          .000        .0          1.498      33.1          2.997        .6          4.496
.3         5.994        .3
          .167        .0          1.665      17.4          3.164        .5          4.662
.3         6.161        .1
          .333        .0          1.831      10.2          3.330        .4          4.829
.3         6.327        .0
          .500        .0          1.998       7.1          3.497        .4          4.995
.3         6.494        .0
          .666        .5          2.164       3.5          3.663        .4          5.162
.3         6.660        .0
          .833       1.0          2.331       1.8          3.830        .3          5.328
.3         6.827        .0
          .999       1.3          2.498       1.3          3.996        .3          5.495
.3
         1.166       1.1          2.664        .9          4.163        .3          5.661
.3
         1.332       8.6          2.831        .7          4.329        .3          5.828
.3
```

```
RUNOFF VOLUME =      1.91586 INCHES      =       1.2936 ACRE-FEET
PEAK DISCHARGE RATE =      33.13 CFS  AT   1.499 HOURS   BASIN AREA =   .0127 SQ. MI.


**********************************************************
ADD HYD              ID=41 HYD NO=201 ID I=40 ID II=5
PRINT HYD            ID=41 CODE=5

                                   PARTIAL HYDROGRAPH   201.00

          TIME      FLOW            TIME      FLOW            TIME      FLOW            TIME
FLOW          TIME      FLOW
           HRS       CFS             HRS       CFS             HRS       CFS             HRS
CFS           HRS       CFS
          .000        .0            1.498     42.8            2.997       .7            4.496
.4         5.994       .4
          .167        .0            1.665     22.4            3.164       .6            4.662
.4         6.161       .2
          .333        .0            1.831     13.4            3.330       .6            4.829
.4         6.327       .0
          .500        .0            1.998      9.4            3.497       .5            4.995
.4         6.494       .0
          .666        .7            2.164      4.6            3.663       .5            5.162
.4         6.660       .0
          .833       1.3            2.331      2.4            3.830       .5            5.328
.4         6.827       .0
          .999       1.8            2.498      1.6            3.996       .4            5.495
.4
         1.166       1.5            2.664      1.2            4.163       .4            5.661
.4
         1.332      11.5            2.831       .9            4.329       .4            5.828
.4

RUNOFF VOLUME =      2.02481 INCHES      =       1.6911 ACRE-FEET
PEAK DISCHARGE RATE =      42.77 CFS  AT   1.499 HOURS   BASIN AREA =   .0157 SQ. MI.


**********************************************************
ADD HYD              ID=42 HYD NO=202 ID I=41 ID II=6
PRINT HYD            ID=42 CODE=5

                                   PARTIAL HYDROGRAPH   202.00

          TIME      FLOW            TIME      FLOW            TIME      FLOW            TIME
FLOW          TIME      FLOW
           HRS       CFS             HRS       CFS             HRS       CFS             HRS
CFS           HRS       CFS
          .000        .0            1.498     44.8            2.997       .8            4.496
.4         5.994       .4
          .167        .0            1.665     23.4            3.164       .7            4.662
.4         6.161       .2
          .333        .0            1.831     14.0            3.330       .6            4.829
.4         6.327       .0
          .500        .0            1.998      9.9            3.497       .5            4.995
.4         6.494       .0
          .666        .7            2.164      4.8            3.663       .5            5.162
.4         6.660       .0
          .833       1.4            2.331      2.5            3.830       .5            5.328
.4         6.827       .0
          .999       1.9            2.498      1.7            3.996       .5            5.495
.4
         1.166       1.6            2.664      1.2            4.163       .4            5.661
.4
         1.332      12.1            2.831       .9            4.329       .4            5.828
.4

RUNOFF VOLUME =      2.04465 INCHES      =       1.7731 ACRE-FEET
PEAK DISCHARGE RATE =      44.75 CFS  AT   1.499 HOURS   BASIN AREA =   .0163 SQ. MI.


**********************************************************
ADD HYD              ID=43 HYD NO=203 ID I=42 ID II=7
PRINT HYD            ID=43 CODE=5

                                   PARTIAL HYDROGRAPH   203.00

          TIME      FLOW            TIME      FLOW            TIME      FLOW            TIME
FLOW          TIME      FLOW
           HRS       CFS             HRS       CFS             HRS       CFS             HRS
CFS           HRS       CFS
```

TIME HRS	FLOW CFS	TIME HRS	FLOW CFS	TIME HRS	FLOW CFS	TIME HRS	FLOW CFS
.000	.0	1.498	46.4	2.997	.8	4.496	.4
5.994	.4						
.167	.0	1.665	24.3	3.164	.7	4.662	.4
6.161	.2						
.333	.0	1.831	14.4	3.330	.6	4.829	.4
6.327	.0						
.500	.0	1.998	10.1	3.497	.5	4.995	.4
6.494	.0						
.666	.7	2.164	5.0	3.663	.5	5.162	.4
6.660	.0						
.833	1.4	2.331	2.6	3.830	.5	5.328	.4
6.827	.0						
.999	1.9	2.498	1.7	3.996	.5	5.495	.4
1.166	1.6	2.664	1.3	4.163	.5	5.661	.4
1.332	12.4	2.831	1.0	4.329	.4	5.828	.4

RUNOFF VOLUME = 1.99575 INCHES = 1.8265 ACRE-FEET
PEAK DISCHARGE RATE = 46.42 CFS AT 1.499 HOURS BASIN AREA = .0172 SQ. MI.

```
*****************************************************
*****************************************************
*SEXISTING POND 1 - ADJACENT TO WILSON STADIUM
*****************************************************
*ROUTE RESERVOIR      ID 45 HYD NO=205 IN ID=43 CODE=5
*                     OUTLFOW    STORAGE    ELEVATION
*                      0.00       0.00        5625
*                      0.00       0.03        5626
*                      0.00       0.11        5627
*                      0.00       0.28        5628
*PRINT HYD            ID=45 CODE=5
*****************************************************
*****************************************************
ADD HYD              ID=50 HYD NO=300 ID I=11 ID II=12
PRINT HYD            ID=50 CODE=5
```

HYDROGRAPH FROM AREA 300.00

TIME HRS	FLOW CFS	TIME HRS	FLOW CFS	TIME HRS	FLOW CFS	TIME HRS	FLOW CFS
.000	.0	1.498	7.2	2.997	.1	4.496	.1
5.994	.1						
.167	.0	1.665	3.7	3.164	.1	4.662	.1
6.161	.0						
.333	.0	1.831	2.4	3.330	.1	4.829	.1
6.327	.0						
.500	.0	1.998	1.8	3.497	.1	4.995	.1
6.494	.0						
.666	.1	2.164	.8	3.663	.1	5.162	.1
6.660	.0						
.833	.3	2.331	.4	3.830	.1	5.328	.1
.999	.4	2.498	.3	3.996	.1	5.495	.1
1.166	.3	2.664	.2	4.163	.1	5.661	.1
1.332	2.2	2.831	.2	4.329	.1	5.828	.1

RUNOFF VOLUME = 2.53861 INCHES = .2992 ACRE-FEET
PEAK DISCHARGE RATE = 7.24 CFS AT 1.499 HOURS BASIN AREA = .0022 SQ. MI.

```
*****************************************************
ADD HYD              ID=51 HYD NO=301 ID I=50 ID II=13
PRINT HYD            ID=51 CODE=5
```

HYDROGRAPH FROM AREA 301.00

TIME HRS	FLOW CFS	TIME HRS	FLOW CFS	TIME HRS	FLOW CFS	TIME HRS	FLOW CFS
.000	.0	1.498	28.5	2.997	.4	4.496	.2
5.994	.2						
.167	.0	1.665	15.5	3.164	.3	4.662	.2
6.161	.1						

.333	.0	1.831	7.9	3.330	.3	4.829	.2
6.327	.0						
.500	.0	1.998	5.0	3.497	.2	4.995	.2
6.494	.0						
.666	.3	2.164	2.6	3.663	.2	5.162	.2
6.660	.0						
.833	.6	2.331	1.5	3.830	.2	5.328	.2
.999	.7	2.498	1.0	3.996	.2	5.495	.2
1.166	.6	2.664	.7	4.163	.2	5.661	.2
1.332	5.9	2.831	.5	4.329	.2	5.828	.2

RUNOFF VOLUME = 1.51409 INCHES = 1.0263 ACRE-FEET
PEAK DISCHARGE RATE = 28.48 CFS AT 1.499 HOURS BASIN AREA = .0127 SQ. MI.

****
ADD HYD ID=52 HYD NO=302 ID I=51 ID II=14
PRINT HYD ID=52 CODE=5

HYDROGRAPH FROM AREA 302.00

TIME HRS	FLOW CFS	TIME HRS	FLOW CFS	TIME HRS	FLOW CFS	TIME HRS	FLOW CFS
.000	.0	1.498	46.1	2.997	.6	4.496	.2
5.994	.2						
.167	.0	1.665	25.4	3.164	.5	4.662	.2
6.161	.1						
.333	.0	1.831	12.4	3.330	.4	4.829	.2
6.327	.0						
.500	.0	1.998	7.5	3.497	.3	4.995	.2
6.494	.0						
.666	.4	2.164	4.0	3.663	.3	5.162	.2
6.660	.0						
.833	.7	2.331	2.3	3.830	.3	5.328	.2
.999	1.0	2.498	1.5	3.996	.3	5.495	.2
1.166	.8	2.664	1.1	4.163	.2	5.661	.2
1.332	8.9	2.831	.8	4.329	.2	5.828	.2

RUNOFF VOLUME = 1.41262 INCHES = 1.6130 ACRE-FEET
PEAK DISCHARGE RATE = 46.07 CFS AT 1.499 HOURS BASIN AREA = .0214 SQ. MI.

****
ADD HYD ID=53 HYD NO=303 ID I=52 ID II=10
PRINT HYD ID=53 CODE=5

HYDROGRAPH FROM AREA 303.00

TIME HRS	FLOW CFS	TIME HRS	FLOW CFS	TIME HRS	FLOW CFS	TIME HRS	FLOW CFS
.000	.0	1.498	74.9	2.997	1.1	4.496	.6
5.994	.6						
.167	.0	1.665	40.2	3.164	.9	4.662	.5
6.161	.2						
.333	.0	1.831	22.0	3.330	.8	4.829	.5
6.327	.1						
.500	.0	1.998	14.5	3.497	.7	4.995	.5
6.494	.0						
.666	.9	2.164	7.3	3.663	.7	5.162	.5
6.660	.0						
.833	1.8	2.331	4.0	3.830	.6	5.328	.5
6.827	.0						
.999	2.4	2.498	2.7	3.996	.6	5.495	.5
6.993	.0						
1.166	2.0	2.664	1.9	4.163	.6	5.661	.6
1.332	17.7	2.831	1.4	4.329	.6	5.828	.6

RUNOFF VOLUME = 1.72989 INCHES = 2.8056 ACRE-FEET

PEAK DISCHARGE RATE = 74.94 CFS AT 1.499 HOURS BASIN AREA = .0304 SQ. MI.

```
*****************************************************
*****************************************************
ADD HYD              ID=60 HYD NO=400 ID I=20 ID II=21
PRINT HYD            ID=60 CODE=5
```

HYDROGRAPH FROM AREA 400.00

TIME HRS	FLOW CFS	TIME HRS	FLOW CFS	TIME HRS	FLOW CFS	TIME HRS	FLOW CFS
.000	.0	1.498	26.5	2.997	.5	4.496	.3
5.994	.3	1.665	13.5	3.164	.4	4.662	.3
.167	.0	1.831	8.8	3.330	.4	4.829	.3
6.161	.1	1.998	6.5	3.497	.4	4.995	.3
.333	.0	2.164	3.1	3.663	.3	5.162	.3
6.327	.0	2.331	1.5	3.830	.3	5.328	.3
.500	.0	2.498	1.0	3.996	.3	5.495	.3
6.494	.0	2.664	.8	4.163	.3	5.661	.3
.666	.5	2.831	.6	4.329	.3	5.828	.3
6.660	.0						
.833	1.0						
6.827	.0						
.999	1.3						
1.166	1.1						
1.332	8.2						

RUNOFF VOLUME = 2.54215 INCHES = 1.0982 ACRE-FEET
PEAK DISCHARGE RATE = 26.49 CFS AT 1.499 HOURS BASIN AREA = .0081 SQ. MI.

```
*****************************************************
ADD HYD              ID=61 HYD NO=401 ID I=60 ID II=22
PRINT HYD            ID=61 CODE=5
```

HYDROGRAPH FROM AREA 401.00

TIME HRS	FLOW CFS	TIME HRS	FLOW CFS	TIME HRS	FLOW CFS	TIME HRS	FLOW CFS
.000	.0	1.498	32.2	2.997	.6	4.496	.4
5.994	.4	1.665	16.4	3.164	.5	4.662	.4
.167	.0	1.831	10.8	3.330	.5	4.829	.4
6.161	.2	1.998	7.9	3.497	.4	4.995	.4
.333	.0	2.164	3.7	3.663	.4	5.162	.4
6.327	.0	2.331	1.9	3.830	.4	5.328	.4
.500	.0	2.498	1.3	3.996	.4	5.495	.4
6.494	.0	2.664	.9	4.163	.4	5.661	.4
.666	.6	2.831	.7	4.329	.4	5.828	.4
6.660	.0						
.833	1.2						
6.827	.0						
.999	1.6						
1.166	1.4						
1.332	10.0						

RUNOFF VOLUME = 2.55930 INCHES = 1.3377 ACRE-FEET
PEAK DISCHARGE RATE = 32.20 CFS AT 1.499 HOURS BASIN AREA = .0098 SQ. MI.

```
*****************************************************
ADD HYD              ID=62 HYD NO=402 ID I=61 ID II=23
PRINT HYD            ID=62 CODE=5
```

HYDROGRAPH FROM AREA 402.00

TIME HRS	FLOW CFS	TIME HRS	FLOW CFS	TIME HRS	FLOW CFS	TIME HRS	FLOW CFS
.000	.0	1.498	49.9	2.997	.9	4.496	

FLOW CFS	TIME HRS	FLOW CFS	TIME HRS	FLOW CFS	TIME HRS	FLOW CFS	TIME HRS
.6	5.994	.6					
	.167	.0	1.665	25.4	3.164	.8	4.662
.6	6.161	.2					
	.333	.0	1.831	16.7	3.330	.7	4.829
.6	6.327	.1					
	.500	.0	1.998	12.3	3.497	.7	4.995
.6	6.494	.0					
	.666	1.0	2.164	5.8	3.663	.7	5.162
.6	6.660	.0					
	.833	1.9	2.331	2.9	3.830	.6	5.328
.6	6.827	.0					
	.999	2.5	2.498	2.0	3.996	.6	5.495
.6	6.993	.0					
	1.166	2.1	2.664	1.4	4.163	.6	5.661
.6							
	1.332	15.5	2.831	1.1	4.329	.6	5.828
.6							

RUNOFF VOLUME = 2.56057 INCHES = 2.0758 ACRE-FEET
PEAK DISCHARGE RATE = 49.93 CFS AT 1.499 HOURS BASIN AREA = .0152 SQ. MI.

****
****
ADD HYD ID=70 HYD NO=500 ID I=24 ID II=15
PRINT HYD ID=70 CODE=5

OUTFLOW HYDROGRAPH RESERVOIR 500.00

FLOW CFS	TIME HRS	FLOW CFS	TIME HRS	FLOW CFS	TIME HRS	FLOW CFS	TIME HRS
	.000	.0	1.498	43.2	2.997	.7	4.496
.4	5.994	.4					
	.167	.0	1.665	22.8	3.164	.6	4.662
.4	6.161	.2					
	.333	.0	1.831	13.2	3.330	.5	4.829
.4	6.327	.0					
	.500	.0	1.998	9.1	3.497	.5	4.995
.4	6.494	.0					
	.666	.6	2.164	4.5	3.663	.5	5.162
.4	6.660	.0					
	.833	1.3	2.331	2.4	3.830	.4	5.328
.4	6.827	.0					
	.999	1.7	2.498	1.6	3.996	.4	5.495
.4	6.993	.0					
	1.166	1.4	2.664	1.2	4.163	.4	5.661
.4							
	1.332	11.1	2.831	.9	4.329	.4	5.828
.4							

RUNOFF VOLUME = 1.90755 INCHES = 1.6786 ACRE-FEET
PEAK DISCHARGE RATE = 43.22 CFS AT 1.499 HOURS BASIN AREA = .0165 SQ. MI.

****
****
ADD HYD ID=80 HYD NO=600 ID I=70 ID II=62
PRINT HYD ID=80 CODE=5

HYDROGRAPH FROM AREA 600.00

FLOW CFS	TIME HRS	FLOW CFS	TIME HRS	FLOW CFS	TIME HRS	FLOW CFS	TIME HRS
	.000	.0	1.498	93.2	2.997	1.6	4.496
1.0	5.994	1.0					
	.167	.0	1.665	48.2	3.164	1.4	4.662
1.0	6.161	.4					
	.333	.0	1.831	29.9	3.330	1.3	4.829
1.0	6.327	.1					
	.500	.0	1.998	21.4	3.497	1.2	4.995
1.0	6.494	.1					
	.666	1.6	2.164	10.3	3.663	1.1	5.162
1.0	6.660	.0					
	.833	3.2	2.331	5.3	3.830	1.1	5.328
1.0	6.827	.0					
	.999	4.2	2.498	3.6	3.996	1.0	5.495
1.0	6.993	.0					
	1.166	3.6	2.664	2.6	4.163	1.0	5.661

```
1.0
        1.332      26.6          2.831       2.0          4.329       1.0          5.828
1.0

      RUNOFF VOLUME =     2.22067 INCHES     =       3.7544 ACRE-FEET
      PEAK DISCHARGE RATE =      93.15 CFS  AT   1.499 HOURS   BASIN AREA =   .0317 SQ. MI.


   ***********************************************************
   ADD HYD              ID=81 HYD NO=601 ID I=80 ID II=53
   PRINT HYD            ID=81 CODE=5

                                                HYDROGRAPH FROM AREA   601.00

        TIME      FLOW           TIME      FLOW           TIME      FLOW           TIME
FLOW          TIME      FLOW
        HRS       CFS            HRS       CFS            HRS       CFS            HRS
CFS           HRS       CFS
        .000        .0           1.498     168.1          2.997       2.8          4.496
1.5       5.994       1.5
        .167        .0           1.665      88.4          3.164       2.4          4.662
1.5       6.161        .6
        .333        .0           1.831      51.9          3.330       2.1          4.829
1.5       6.327        .2
        .500        .0           1.998      35.8          3.497       1.9          4.995
1.5       6.494        .1
        .666       2.5           2.164      17.6          3.663       1.8          5.162
1.5       6.660        .0
        .833       5.0           2.331       9.3          3.830       1.7          5.328
1.5       6.827        .0
        .999       6.6           2.498       6.2          3.996       1.6          5.495
1.5       6.993        .0
       1.166       5.6           2.664       4.5          4.163       1.6          5.661
1.5
       1.332      44.3           2.831       3.4          4.329       1.5          5.828
1.5

      RUNOFF VOLUME =     1.98038 INCHES     =       6.5600 ACRE-FEET
      PEAK DISCHARGE RATE =     168.09 CFS  AT   1.499 HOURS   BASIN AREA =   .0621 SQ. MI.


   ***********************************************************
   ***********************************************************
   *SEXISTING POND 2 - SOCCER FIELD
   ***********************************************************
   ROUTE RESERVOIR      ID 82 HYD NO=700 IN ID=80 CODE=5
                        OUTLFOW     STORAGE     ELEVATION
                          0.00        0.00        5585.0
                          6.02        0.05        5586.0
                          6.83        0.31        5587.0
                          7.56        1.01        5588.0
                          8.22        2.13        5589.0
                          8.53        3.74        2289.5

     *  *  *  *  *  *  *  *  *  *  *  *  *  *  *  *  *

       TIME       INFLOW     ELEV       VOLUME     OUTFLOW
       (HRS)      (CFS)      (FEET)     (AC-FT)    (CFS)

         .00        .00    5585.00       .000        .00
         .17        .00    5585.00       .000        .00
         .33        .00    5585.00       .000        .00
         .50        .00    5585.00       .000        .00
         .67       1.58    5585.09       .005        .55
         .83       3.17    5585.38       .019       2.31
        1.00       4.20    5585.58       .029       3.52
        1.17       3.55    5585.65       .032       3.91
        1.33      26.64    5586.25       .116       6.23
        1.50      93.15    5587.79       .860       7.40
        1.67      48.23    5588.65      1.743       7.99
        1.83      29.91    5553.77      2.147       8.22
        2.00      21.36    5074.65      2.381       8.27
        2.16      10.33    4841.54      2.495       8.29
        2.33       5.29    4872.77      2.479       8.29
        2.50       3.56    4983.84      2.425       8.28
        2.66       2.59    5131.59      2.353       8.26
        2.83       2.01    5300.21      2.271       8.25
        3.00       1.65    5481.34      2.183       8.23
        3.16       1.42    5588.96      2.090       8.20
        3.33       1.28    5588.88      1.997       8.14
        3.50       1.19    5588.80      1.902       8.09
        3.66       1.12    5588.71      1.807       8.03
```

			1006 prop.OUT	
3.83	1.07	5588.63	1.712	7.97
4.00	1.04	5588.54	1.617	7.92
4.16	1.00	5588.46	1.523	7.86
4.33	.98	5588.37	1.428	7.81
4.50	.97	5588.29	1.335	7.75
4.66	.96	5588.21	1.242	7.70
4.83	.95	5588.12	1.149	7.64
5.00	.95	5588.04	1.058	7.59
5.16	.95	5587.94	.967	7.51
5.33	.96	5587.81	.877	7.42
5.49	.96	5587.68	.789	7.33
5.66	.97	5587.56	.702	7.24
5.83	.97	5587.44	.616	7.15
5.99	.99	5587.32	.532	7.06
6.16	.39	5587.19	.446	6.97
6.33	.11	5587.06	.354	6.88
6.49	.05	5586.81	.261	6.68
6.66	.02	5586.47	.172	6.40
6.83	.01	5586.14	.086	6.13
6.99	.00	5585.39	.019	2.33
7.16	.00	5585.07	.004	.44
7.33	.00	5585.01	.001	.08
7.49	.00	5585.00	.000	.02
7.66	.00	5585.00	.000	.00

PEAK DISCHARGE = 8.291 CFS - PEAK OCCURS AT HOUR 2.20
MAXIMUM WATER SURFACE ELEVATION = 4835.052
MAXIMUM STORAGE = 2.4979 AC-FT INCREMENTAL TIME= .033300HRS

PRINT HYD ID=82 CODE=5

HYDROGRAPH FROM AREA 700.00

TIME HRS	FLOW CFS	TIME HRS	FLOW CFS	TIME HRS	FLOW CFS	TIME HRS	FLOW CFS	TIME HRS	FLOW CFS
.000	.0	1.665	8.0	3.330	8.1	4.995	7.6	6.660	6.4
.167	.0	1.831	8.2	3.497	8.1	5.162	7.5	6.827	6.1
.333	.0	1.998	8.3	3.663	8.0	5.328	7.4	6.993	2.3
.500	.0	2.164	8.3	3.830	8.0	5.495	7.3	7.160	.4
.666	.5	2.331	8.3	3.996	7.9	5.661	7.2	7.326	.1
.833	2.3	2.498	8.3	4.163	7.9	5.828	7.1	7.493	.0
.999	3.5	2.664	8.3	4.329	7.8	5.994	7.1	7.659	.0
1.166	3.9	2.831	8.2	4.496	7.8	6.161	7.0		
1.332	6.2	2.997	8.2	4.662	7.7	6.327	6.9		
1.498	7.4	3.164	8.2	4.829	7.6	6.494	6.7		

RUNOFF VOLUME = 2.22067 INCHES = 3.7544 ACRE-FEET
PEAK DISCHARGE RATE = 8.29 CFS AT 2.198 HOURS BASIN AREA = .0317 SQ. MI.

****
****
FINISH

NORMAL PROGRAM FINISH END TIME (HR:MIN:SEC) = 16:28:52

CITY OF ALBUQUERQUE

January 14, 2009

Jason R. Woodruff, P.E.
Wilson & Company, Inc.
4900 Lang Ave. NE
Albuquerque, NM 87109

Re: Manzano High School Drainage Master Plan Phased Grading Plans
Engineer's Stamp dated 1-13-09 (K22/D020)

Dear Mr. Woodruff,

Based upon the information provided in your submittal received 1-14-09, the above referenced plan, Phases 1, 2, and 3, are approved for Grading Permit and Paving Permit. You will need to resubmit for Phase 4 when you have permission to work on the adjacent property.

Upon completion of the project, provide an Engineer Certification for our files.

If you have any questions, you can contact me at 924-3695.

Sincerely,

Curtis A. Cherne, P.E.
Senior Engineer, Planning Dept.
Development and Building Services

C: file

PO Box 1293
Albuquerque
NM 87103
www.cabq.gov

DRAINAGE AND TRANSPORTATION INFORMATION SHEET

(REV. 12/05 - AP)

PROJECT TITLE: Manzano HS - DMP ZONE MAP/DRG. FILE#: K-22-Z/D020

DRB#: _____ EPC#: _____ WORK ORDER #: _____

LEGAL DESCRIPTION: SEE exhibits in attached Report

CITY ADDRESS: 12200 Lomas Blvd NE

ENGINEERING FIRM:	Wilson & Company	CONTACT:	Jason Woodruff, PE
ADDRESS:	4900 Lang Ave. NE	PHONE:	505-235-7250
CITY, STATE:	Albuqueruqe, NM	ZIP CODE:	87109
OWNER:	APS	CONTACT:	Tyler Mason
ADDRESS:	915 Oak Street	PHONE:	505-848-8822
CITY, STATE:	Albuqueruque New Mexico	ZIP CODE:	87106
ARCHITECT:	Wilson & Company	CONTACT:	See Engineer Above
ADDRESS:	4900 Lang Ave. NE	PHONE:	505-235-7250
CITY, STATE:	Albuquerque, NM	ZIP CODE:	
SURVEYING FIRM:	Wilson & Company	LICENSED SURVEYOR:	Ben Aragon
ADDRESS:	4900 Lang Ave. NE	PHONE:	505-348-4067
CITY, STATE:	Albuquerque, NM	ZIP CODE:	87109
CONTRACTOR:		CONTACT:	
ADDRESS:		PHONE:	
CITY, STATE:		ZIP CODE:	

CHECK TYPE OF SUBMITTAL:

___ DRAINAGE REPORT - RESUBMITTAL
X DRAINAGE PLAN 1st SUBMITTAL
X DRAINAGE PLAN RESUBMITTAL
___ CONCEPTUAL GRADING & DRAINAGE PLAN
X GRADING PLAN
___ EROSION CONTROL PLAN
___ ENGINEER'S CERT (HYDROLOGY)
___ CLOMR\LOMR
___ TRAFFIC CIRCULTAION LAYOUT
___ ENGINEER/ARCHITECT CERT (TCL)
___ ENGINEER/ARCHITECT CERT (DRB S. P.)
___ ENGINEER/ARCHITECT CERT (AA)
___ OTHER (SPECIFY)

CHECK TYPE OF APPROVAL SOUGHT:

___ SIA / FINANCIAL GUARANTEE RELEASE
___ PRELIMINARY PLAT APPROVAL
___ S. DEV. PLAN FOR SUB'D. APPROVAL
___ S. DEV. PLAN FOR BLDG. PERMIT APPROVAL
___ SECTOR PLAN APPROVAL
___ FINAL PLAT APPROVAL
___ FOUNDATION PERMIT APPROVAL
___ BUILDING PERMIT APPROVAL
___ CERTIFICATE OF OCCUPANCY (PERM.)
___ CERTIFICATE OF OCCUPANCY (TEMP)
X GRADING PERMIT APPROVAL
X PAVING PERMIT APPROVAL
___ WORK ORDER APPROVAL
___ OTHER (SPECIFY) SO #19

WAS A PRE-DESIGN CONFERENCE ATTENDED:

___ YES
x NO
___ COPY PROVIDED

RECEIVED
DEC JAN 14 2009
HYDROLOGY SECTION

Submitted By: Jason Woodruff DATE: 12-23-08

Requests for approvals of Site Development Plans and/or Subdivision Plats shall be accompanied by a drainage submittal. The particular nature, location and scope of the proposed development define the degree of drainage detail. One or more of the following levels of submittal may be required based on the following:

1. **Conceptual Grading and Drainage Plan:** Required for approval of Site Development Plans greater than five
2. **Drainage Plans**: Required for building permits, grading permits, paving permits and site plans less than five (5)
3. **Drainage Report:** Required for subdivisions containing more than ten (10) lots or constituting five (5) acres or more.

Appendix C
Plan and Profile Sheets

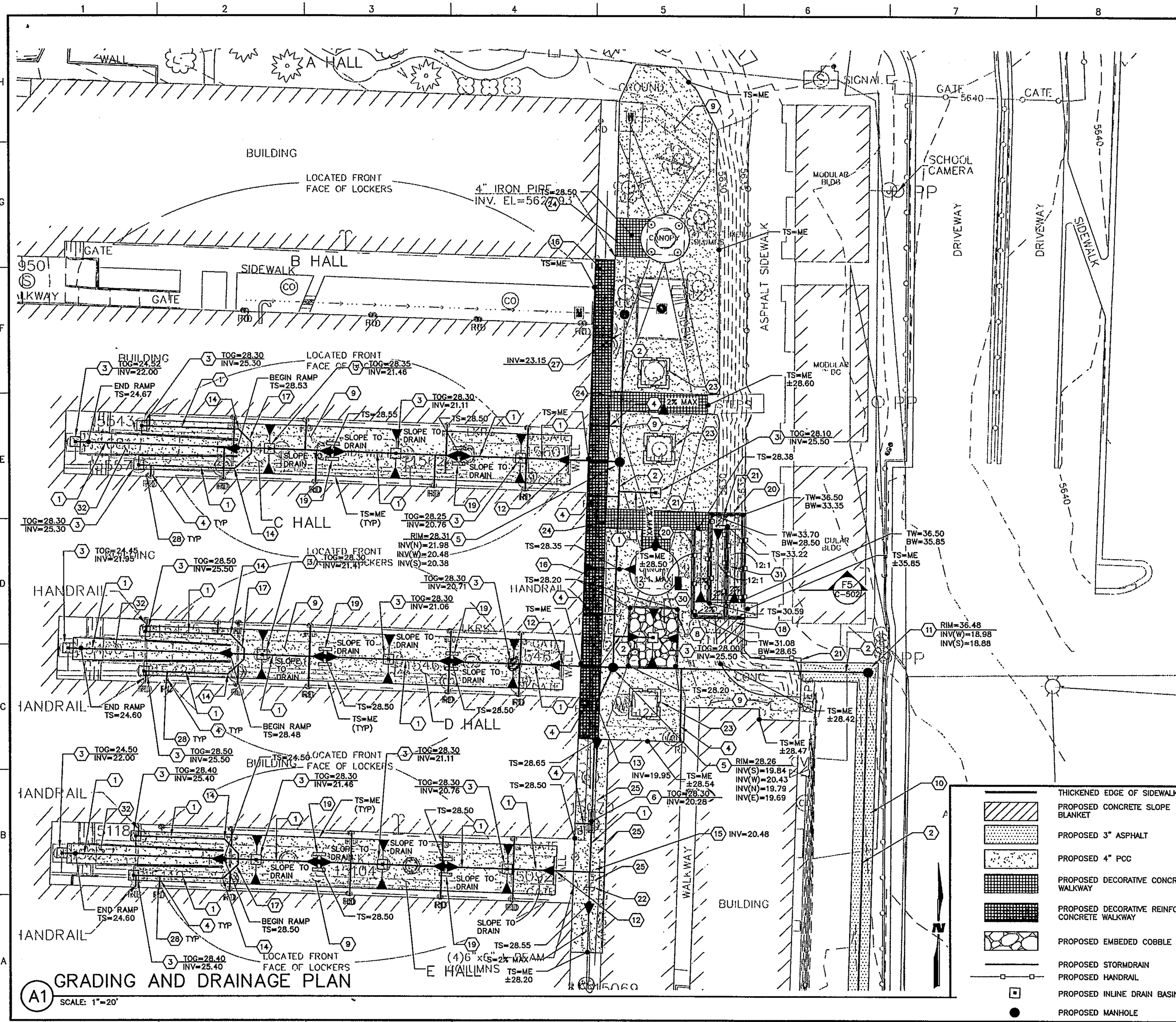

GRADING AND DRAINAGE PLAN

A1

SCALE: 1"=20'

KEYED NOTES

1. INSTALL [illegible] DIA HDPE STORM DRAIN PIPE.
2. INSTALL 18" DIA HDPE STORM DRAIN PIPE.
3. INSTALL 12" INLINE DRAIN BASIN WITH PEDESTRIAN GRATE. SEE DETAIL F4/C-501.
4. INSTALL ROOF DRAIN CONNECTION ON ALL PRIMARY ROOF DRAINS. SEE DETAIL E1/C-502.
5. INSTALL 4' DIA TYPE "E" MANHOLE. SEE DETAIL A5/C-503.
6. INSTALL 8' TRENCH INLET. SEE DETAIL C1/C-501.
7. CONNECT TO EXISTING MANHOLE.
8. INSTALL THICKENED EDGE SIDEWALK. SEE DETAIL A5/C-501.
9. INSTALL 4" PCC SIDEWALK. SEE DETAIL G8/C-501.
10. INSTALL 3" ASPHALT. SEE DETAIL F9/C-501.
11. INSTALL 6' DIA TYPE "E" MANHOLE. SEE DETAIL A5/C-503.
12. BORE AND JACK STORM DRAIN UNDER EXISTING WALL PER COA STD DWG 2180. INSTALL 22" DIA STANDARD CLASS CASING PIPE WITH SPACERS PER COA STD SPECS SECTION 710.
13. INSTALL 12" 22.5° HDPE BEND.
14. INSTALL 12" 45° HDPE BEND.
15. INSTALL 12" 90° HDPE BEND WITH CLEANOUT.
16. INSTALL DECORATIVE REINFORCED CONCRETE WALKWAY. SEE DETAIL A1/C-503.
17. INSTALL 12" HDPE CROSS WITH 2-12" 45° BEND.
18. INSTALL CONCRETE SLOPE BLANKET. SEE DETAIL F7/C-503.
19. INSTALL CONCRETE BANCO. SEE DETAIL C6/C-501.
20. INSTALL CONCRETE RETAINING WALL. SEE SHEETS C-401 AND C-402.
21. INSTALL 42" HANDRAIL. SEE DETAIL A8/C-501.
22. PLUG EXISTING 8" STORM DRAIN.
23. INSTALL CONCRETE BANCO 2' WIDE OPENING ON CENTER OF EACH SIDE. SEE DETAIL C6/C-501.
24. INSTALL DECORATIVE CONCRETE WALKWAY.
25. REMOVE AND REPLACE EXISTING HAIRPIN DOORSTOP.
26. INSTALL SINGLE TYPE "D" INLET. SEE DETAIL C1/C-503.
27. CONNECT TO 18" HDPE PLUG.
28. INSTALL OVERFLOW ROOFDRAIN END SECTION ON ALL SECONDARY ROOF DRAINS. SEE DETAIL F5/C-503.
29. INSTALL RIPRAP SWALE TO INLINE DRAIN. SEE DETAIL G5/C-501.
30. INSTALL EMBEDDED COBBLES.
31. PROPOSED SWITCHBACK RAMP. SEE SHEETS C-401 AND C-402.
32. REPLACE EXISTING RAMP. MATCH ALL LANDINGS AND MAINTAIN EXISTING SLOPES.
33. GROUT FILL BOTTOM OF EXISTING DRY WELL INLET.

LEGEND

- THICKENED EDGE OF SIDEWALK
- PROPOSED CONCRETE SLOPE BLANKET
- PROPOSED 3" ASPHALT
- PROPOSED 4" PCC
- PROPOSED DECORATIVE CONCRETE WALKWAY
- PROPOSED DECORATIVE REINFORCED CONCRETE WALKWAY
- PROPOSED EMBEDED COBBLE
- PROPOSED STORMDRAIN
- PROPOSED HANDRAIL
- PROPOSED INLINE DRAIN BASIN
- PROPOSED MANHOLE
- UTILITY, SANITARY MANHOLE
- UTILITY, SANITARY CLEANOUT
- UTILITY, WATER MANHOLE
- UTILITY, WATER METER
- UTILITY, WATER VALVE
- UTILITY, ROOF DRAIN
- UTILITY, CATCH BASIN
- UTILITY, SPRINKLER CONTROL BOX
- ELECTRICAL, POWER POLE
- CONTROL POINT
- ELECTRIC LINE, OVERHEAD
- ELECTRIC LINE, UNDERGROUND
- GAS LINE
- WATER LINE
- CHAINLINK FENCE
- CHAINLINK FENCE
- ELECTRICAL, JUNCTION BOX
- DRAINAGE, CATCH BASIN, ROUND
- GAS VALVE
- ROOF DRAIN
- WATER FAUCET

WILSON & COMPANY
2600 THE AMERICAN RD. SE SUITE 100
RIO RANCHO, NM 87124
PHONE: 505-898-8021
FAX: 505-898-8501
www.wilsonco.com

CONSULTANTS

SEAL

JENNIFER M. FLOR
NEW MEXICO
19416
REGISTERED PROFESSIONAL ENGINEER

PROJECT NAME

MANZANO HIGH SCHOOL
DRAINAGE MASTER PLAN
PHASE II IMPROVEMENTS

MARK	DATE	DESCRIPTION

PROJECT NO:	
DESIGNED BY:	JMF
DRAWN BY:	AJM
CHECKED BY:	MJI
DATE:	

SHEET TITLE

GRADING AND DRAINAGE PLAN

SHEET NO:

C-103

M:\DS\09-600-039-00\CADD\SHEETS\02_G&D\96039_GD-01.dwg 2/10/2010 11:42:07 AM MST

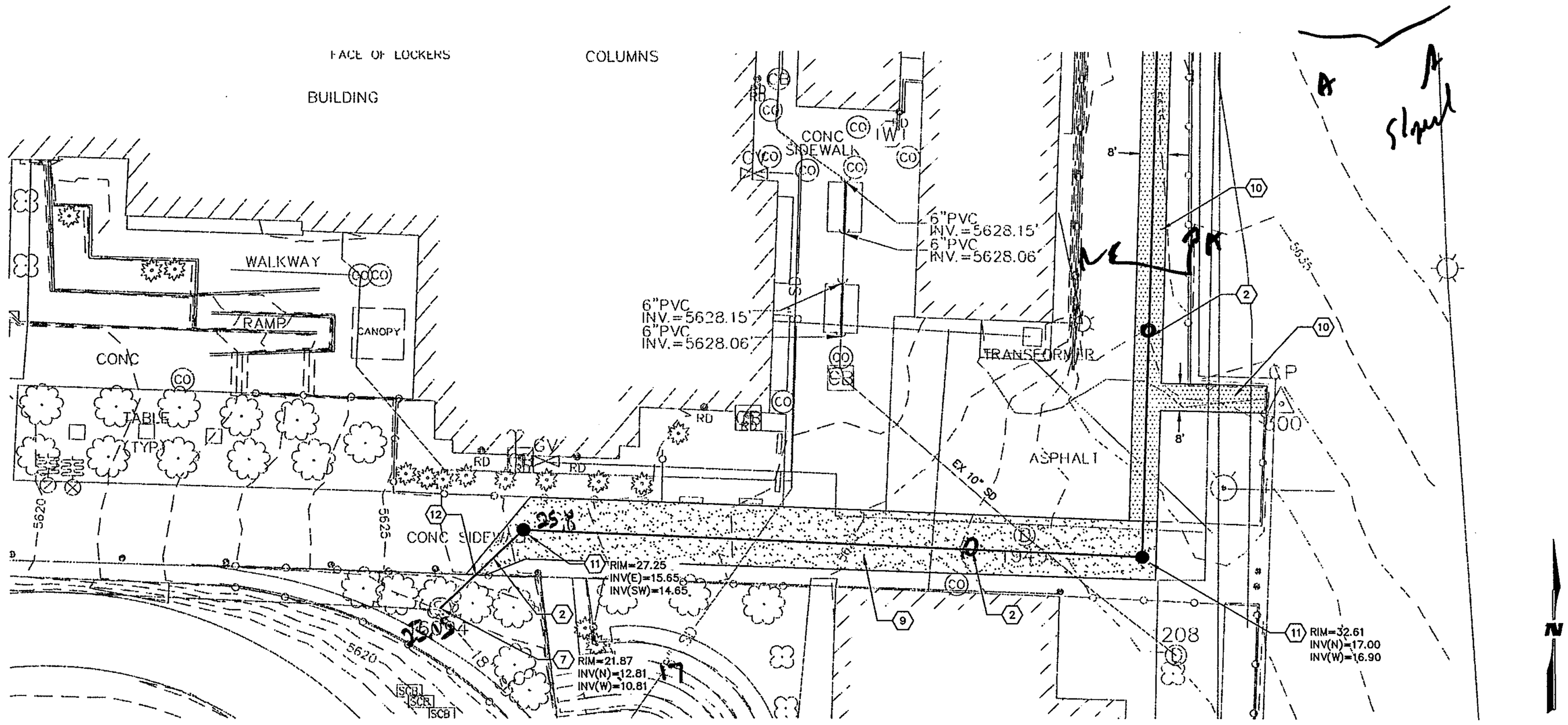

C1 GRADING AND DRAINAGE PLAN

SCALE: 1"=20'

KEYED NOTES

1. INSTALL 12" DIA HDPE STORM DRAIN PIPE.
2. INSTALL 18" DIA HDPE STORM DRAIN PIPE.
3. INSTALL 12" INLINE DRAIN BASIN WITH PEDESTRIAN GRATE. SEE DETAIL F4/C-501.
4. INSTALL ROOF DRAIN CONNECTION ON ALL PRIMARY ROOF DRAINS. SEE DETAIL E1/C-502.
5. INSTALL 4' DIA TYPE "E" MANHOLE. SEE DETAIL A5/C-503.
6. INSTALL 8' TRENCH INLET. SEE DETAIL C1/C-501.
7. CONNECT TO EXISTING MANHOLE.
8. INSTALL THICKENED EDGE SIDEWALK. SEE DETAIL A5/C-501.
9. INSTALL 4" PCC SIDEWALK. SEE DETAIL G8/C-501.
10. INSTALL 3" ASPHALT. SEE DETAIL F9/C-501.
11. INSTALL 6' DIA TYPE "E" MANHOLE. SEE DETAIL A5/C-503.
12. BORE AND JACK STORM DRAIN UNDER EXISTING WALL PER COA STD DWG 2180. INSTALL 22" DIA STANDARD CLASS CASING PIPE WITH SPACERS PER COA STD SPECS SECTION 710.
13. INSTALL 12" 22.5° HDPE BEND.
14. INSTALL 12" 45° HDPE BEND.
15. INSTALL 12" 90° HDPE BEND WITH CLEANOUT.
16. INSTALL DECORATIVE REINFORCED CONCRETE WALKWAY. SEE DETAIL A1/C-503.
17. INSTALL 12" HDPE CROSS WITH 2-12" 45° BEND.
18. INSTALL CONCRETE SLOPE BLANKET. SEE DETAIL F7/C-503.
19. INSTALL CONCRETE BANCO. SEE DETAIL C6/C-501.
20. INSTALL 8" CONCRETE RETAINING WALL. SEE DETAILS A1, A4, A6 AND A8/C-502.
21. INSTALL 42" HANDRAIL. SEE DETAIL A8/C-501.
22. PLUG EXISTING 8" STORM DRAIN.
23. INSTALL CONCRETE BANCO 2' WIDE OPENING ON CENTER OF EACH SIDE. SEE DETAIL C6/C-501.
24. INSTALL DECORATIVE CONCRETE WALKWAY.
25. REMOVE AND REPLACE EXISTING HAIRPIN DOORSTOP.
26. INSTALL SINGLE TYPE "D" INLET. SEE DETAIL C1/C-503.
27. NOT USED
28. INSTALL OVERFLOW ROOFDRAIN END SECTION ON ALL SECONDARY ROOF DRAINS. SEE DETAIL F5/C-503.
29. INSTALL RIPRAP SWALE TO INLINE DRAIN. SEE DETAIL G5/C-501.
30. INSTALL EMBEDDED COBBLES.
31. PROPOSED SWITCHBACK RAMP. SEE SHEETS C-401 AND C-402.
32. REPLACE EXISTING RAMP. MATCH ALL LANDINGS AND MAINTAIN EXISTING SLOPES.

LEGEND

- UTILITY, SANITARY MANHOLE
- UTILITY, SANITARY CLEANOUT
- UTILITY, WATER MANHOLE
- UTILITY, WATER METER
- UTILITY, WATER VALVE
- UTILITY, ROOF DRAIN
- UTILITY, CATCH BASIN
- UTILITY, SPRINKLER CONTROL BOX
- ELECTRICAL, POWER POLE
- CONTROL POINT
- CHAINLINK FENCE
- CHAINLINK FENCE
- PROPOSED CONCRETE SLOPE BLANKET
- PROPOSED 3" ASPHALT
- PROPOSED 4" PCC
- PROPOSED DECORATIVE CONCRETE WALKWAY
- PROPOSED STORMDRAIN
- PROPOSED HANDRAIL
- PROPOSED INLINE DRAIN BASIN
- PROPOSED MANHOLE
- ELECTRIC LINE, OVERHEAD
- ELECTRIC LINE, UNDERGROUND
- GAS LINE
- WATER LINE
- ELECTRICAL, JUNCTION BOX
- DRAINAGE, CATCH BASIN, ROUND
- GAS VALVE
- ROOF DRAIN
- WATER FAUCET

WILSON & COMPANY
2600 THE AMERICAN RD. SE SUITE 100
RIO RANCHO, NM 87124
PHONE: 505-898-8021
FAX: 505-898-8501
www.wilsonco.com

CONSULTANTS

SEAL

JENNIFER M. JAMES
NEW MEXICO
19416
02/10/2010
REGISTERED PROFESSIONAL ENGINEER

PROJECT NAME
MANZANO HIGH SCHOOL
DRAINAGE MASTER PLAN
PHASE II IMPROVEMENTS

MARK	DATE	DESCRIPTION

PROJECT NO:	
DESIGNED BY:	JMF
DRAWN BY:	AJM
CHECKED BY:	MJI
DATE:	

SHEET TITLE
GRADING AND DRAINAGE PLAN

SHEET NO:
C-104

M:\IDS\09-600-039-00\CADD\SHEETS\02_G&D\96039_GD-02.dwg 2/10/2010 11:43:01 AM MST

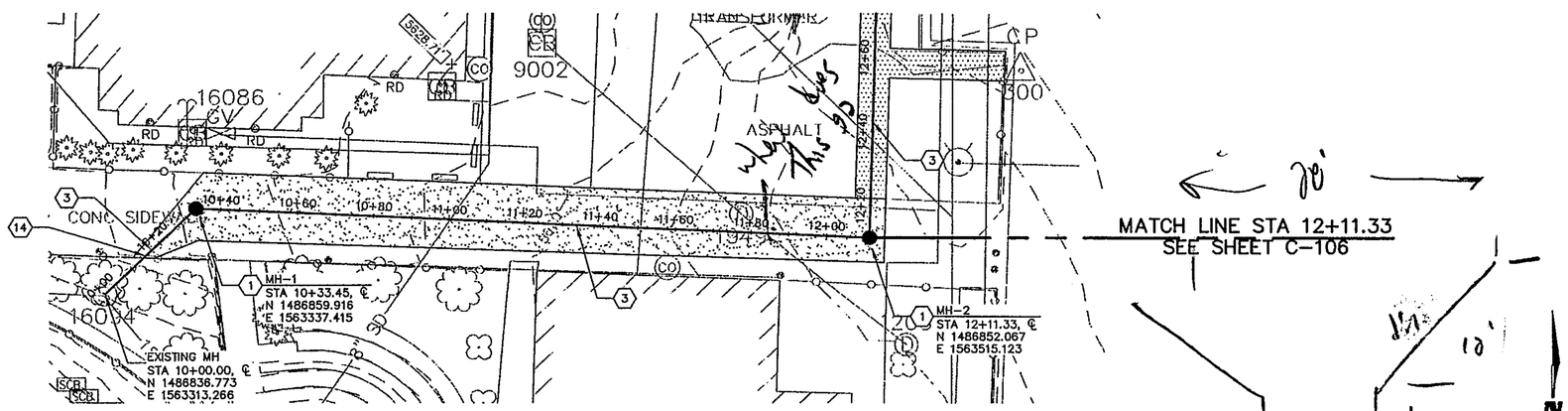

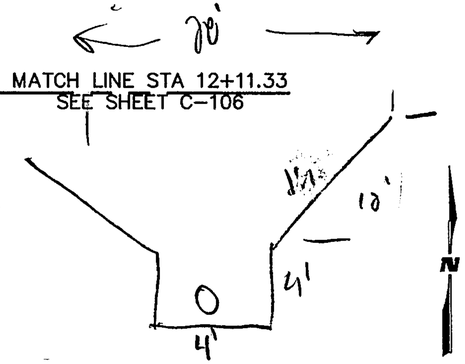

MAIN SD

PLAN

SCALE:
HORIZ: 1" = 20'
VERT: 1" = 5'

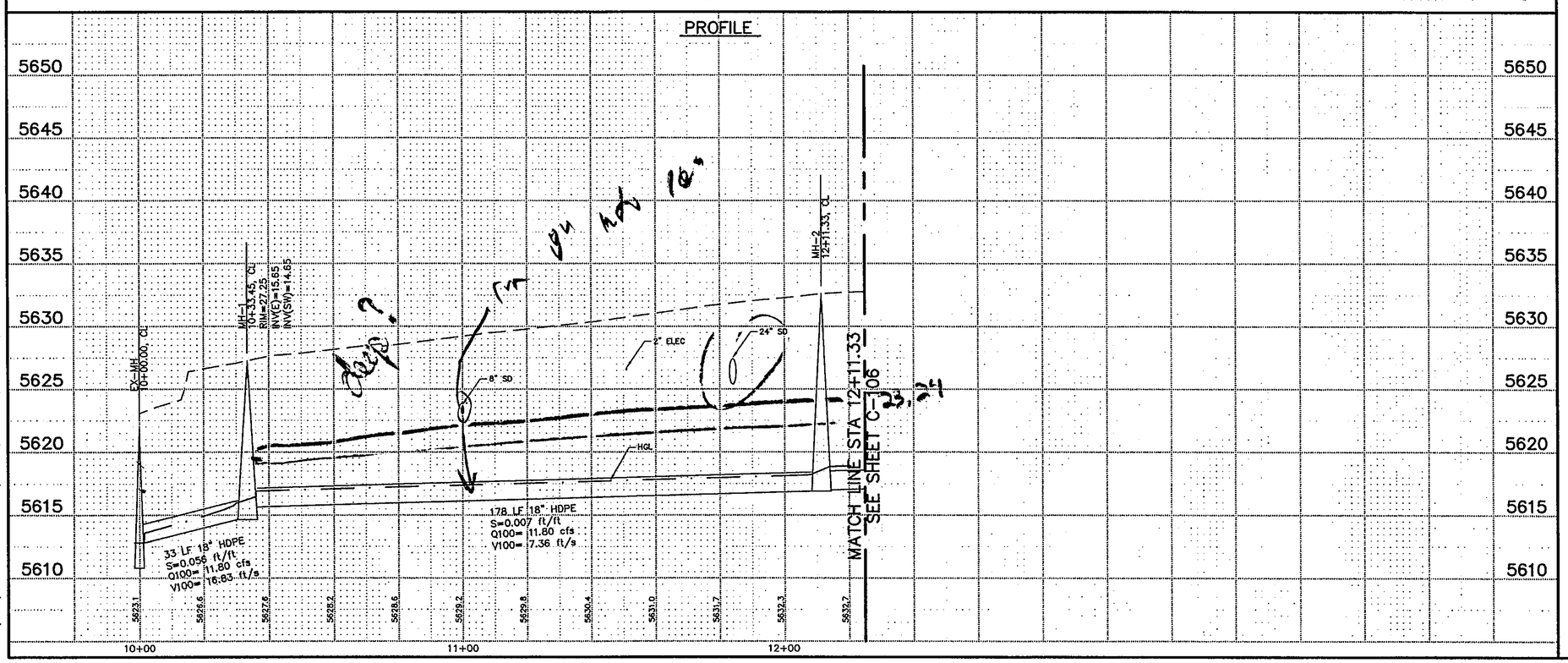

KEYED NOTES

1. INSTALL 6' DIA TYPE "E" MANHOLE. SEE DETAIL A5/C-503.
2. INSTALL 4' DIA TYPE "E" MANHOLE. SEE DETAIL A5/C-503.
3. INSTALL 18" DIA HDPE STORM DRAIN PIPE.
4. INSTALL 12" DIA HDPE STORM DRAIN PIPE.
5. INSTALL 12" INLINE DRAIN BASIN WITH PEDESTRIAN GRATE. SEE DETAIL F4/C-502.
6. INSTALL 12" 45° HDPE BEND.
7. INSTALL 12" HDPE CROSS WITH 2-12" 45° BENDS.
8. INSTALL 8' TRENCH INLET. SEE DETAIL C1/C-501.
9. INSTALL ROOF DRAIN CONNECTION ON ALL PRIMARY ROOF DRAINS. SEE DETAIL E1/C-502.
10. INSTALL OVERFLOW ROOF DRAIN END SECTION ON ALL SECONDARY ROOF DRAINS. SEE DETAIL F5/C-503.
11. INSTALL 12" 90° HDPE BEND WITH CLEANOUT.
12. INSTALL SINGLE TYPE "D" INLET. SEE DETAIL C1/C-503.
13. INSTALL 12" 22.5° HDPE BEND.
14. BORE AND JACK STORM DRAIN UNDER EXISTING WALL PER COA STD DWG 2180. INSTALL 22" DIA STANDARD CLASS CASING PIPE WITH SPACERS PER COA STD SPECS SECTION 710. BEGIN AND END BORE AND JACK 10' FROM EACH SIDE OF WALL.

WILSON & COMPANY
2600 THE AMERICAN RD. SE SUITE 100
RIO RANCHO, NM 87124
PHONE: 505-896-8021
FAX: 505-896-8001
www.wilsonco.com

CONSULTANTS

SEAL

PROJECT NAME

MANZANO HIGH SCHOOL
DRAINAGE MASTER PLAN
PHASE II IMPROVEMENTS

MARK	DATE	DESCRIPTION

PROJECT NO:	
DESIGNED BY:	JMF
DRAWN BY:	AJM
CHECKED BY:	MJI
DATE:	

SHEET TITLE

PLAN AND PROFILE MAIN SD

SHEET NO:

C-105

M:\IDS\09-600-039-00\CADD\SHEETS\03_PNP\96039_PNP-01.dwg 2/10/2010 11:44:06 AM MST

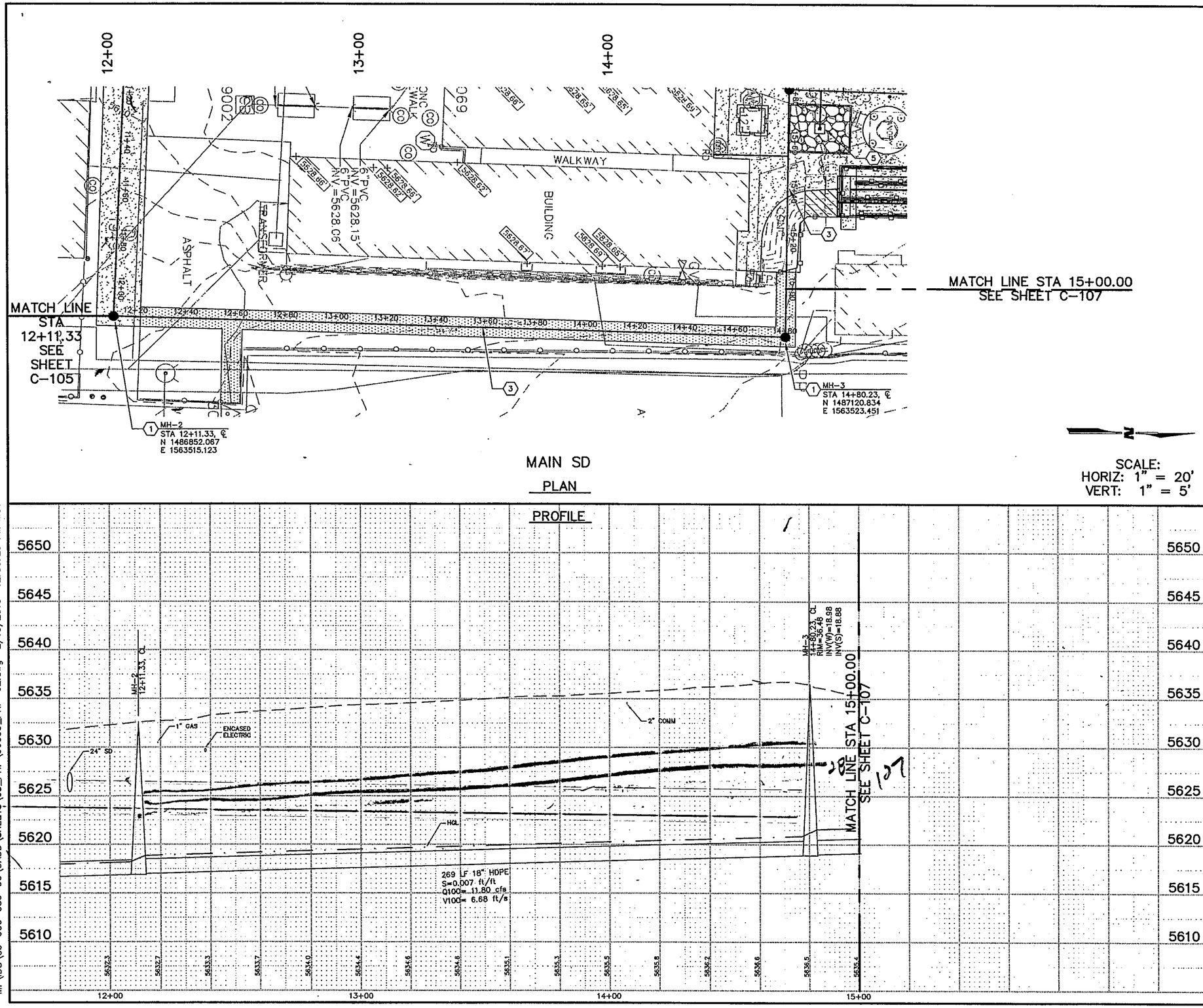

KEYED NOTES

1. INSTALL 6' DIA TYPE "E" MANHOLE. SEE DETAIL A5/C-503.
2. INSTALL 4' DIA TYPE "E" MANHOLE. SEE DETAIL A5/C-503.
3. INSTALL 18" DIA HDPE STORM DRAIN PIPE.
4. INSTALL 12" DIA HDPE STORM DRAIN PIPE.
5. INSTALL 12" INLINE DRAIN BASIN WITH PEDESTRIAN GRATE. SEE DETAIL F4/C-502.
6. INSTALL 12" 45° HDPE BEND.
7. INSTALL 12" HDPE CROSS WITH 2-12" 45° BENDS.
8. INSTALL 8' TRENCH INLET. SEE DETAIL C1/C-501.
9. INSTALL ROOF DRAIN CONNECTION ON ALL PRIMARY ROOF DRAINS. SEE DETAIL E1/C-502.
10. INSTALL OVERFLOW ROOF DRAIN END SECTION ON ALL SECONDARY ROOF DRAINS. SEE DETAIL F5/C-503.
11. INSTALL 12" 90° HDPE BEND WITH CLEANOUT.
12. INSTALL SINGLE TYPE "D" INLET. SEE DETAIL C1/C-503.
13. INSTALL 12" 22.5° HDPE BEND.

WILSON & COMPANY
2600 THE AMERICAN RD. SE SUITE 100
RIO RANCHO, NM 87124
PHONE: 505-898-8021
FAX: 505-898-8501
www.wilsonco.com

CONSULTANTS

SEAL

JENNIFER M. FLOR NEW MEXICO 19416 REGISTERED PROFESSIONAL ENGINEER 02/10/2010

PROJECT NAME
MANZANO HIGH SCHOOL DRAINAGE MASTER PLAN PHASE II IMPROVEMENTS

MARK	DATE	DESCRIPTION

PROJECT NO:	
DESIGNED BY:	JMF
DRAWN BY:	AJM
CHECKED BY:	MJI
DATE:	

SHEET TITLE
PLAN AND PROFILE MAIN SD

SHEET NO:
C-106

M:\IDS\09-600-039-00\CADD\SHEETS\03_PNP\96039_PNP-02.dwg 2/10/2010 12:56:29 PM MST

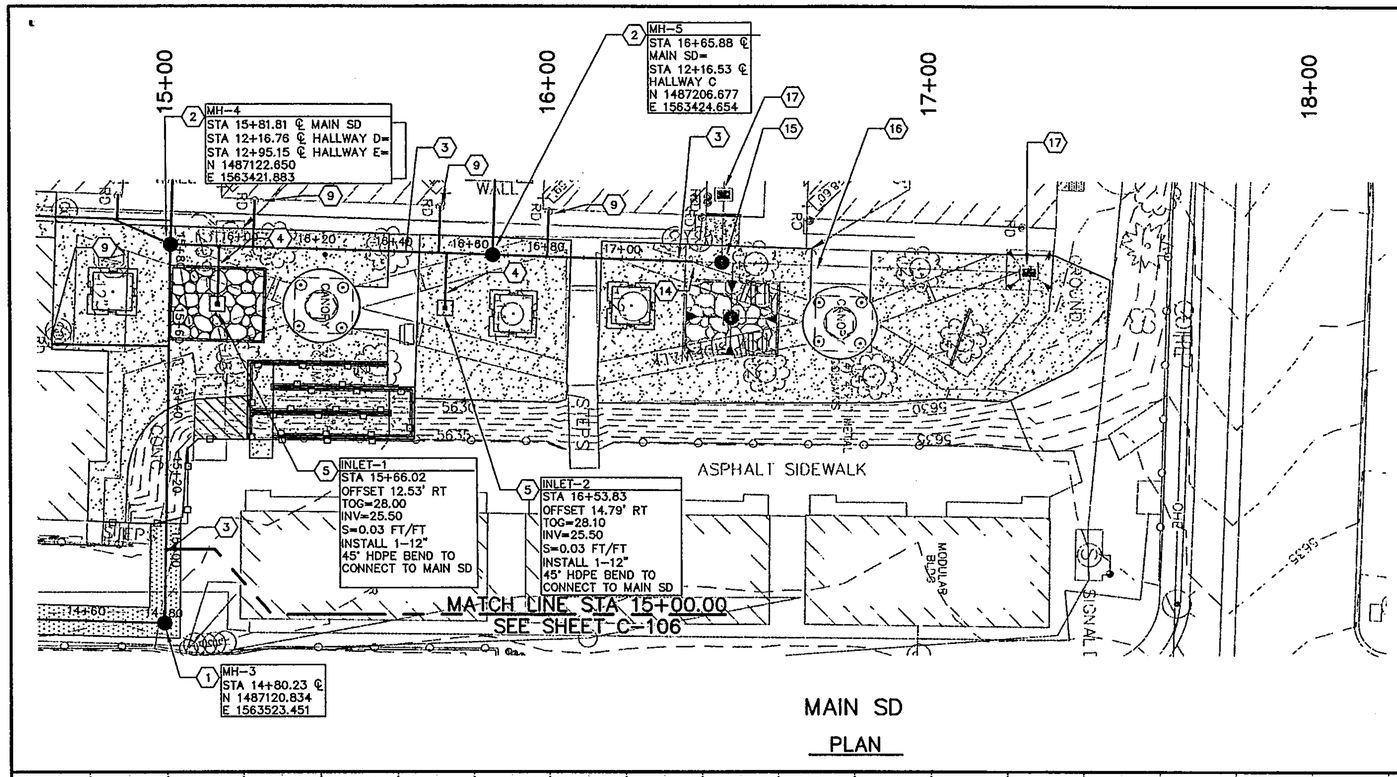

MAIN SD

PLAN

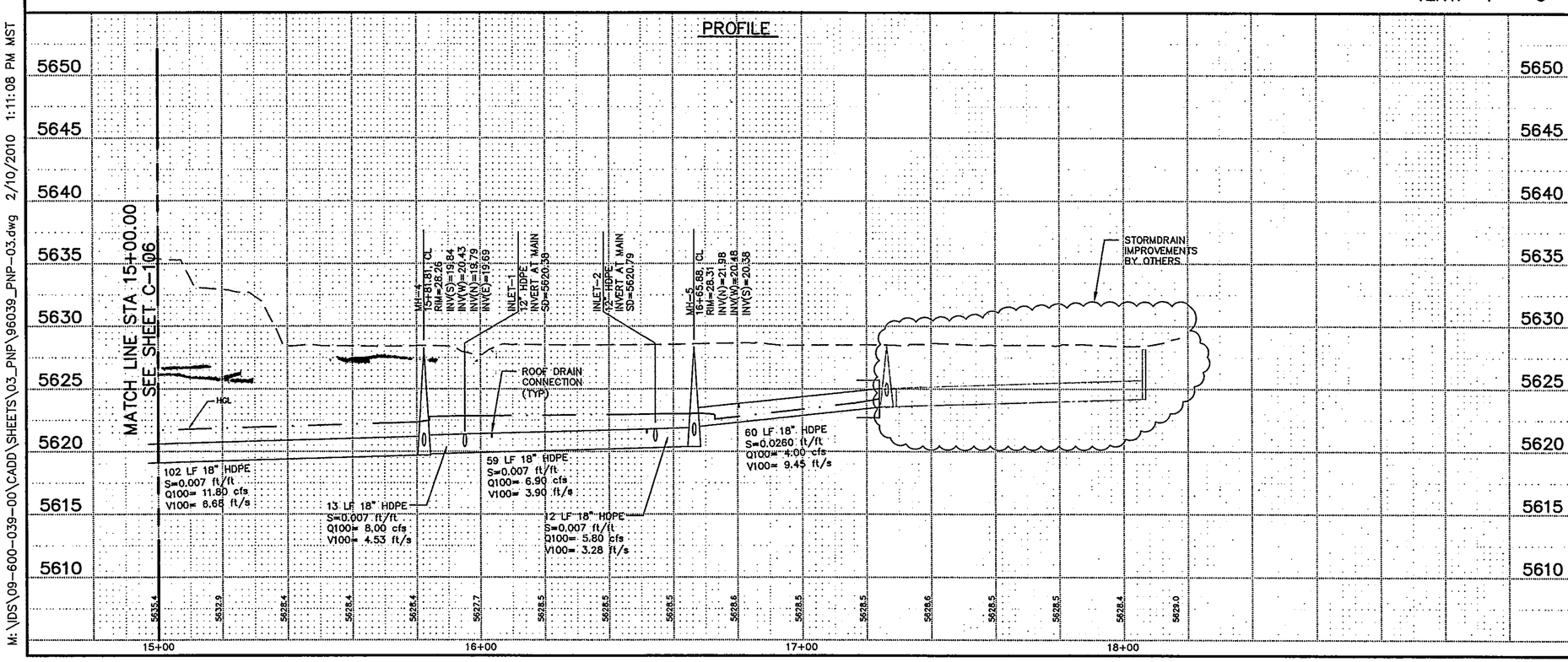

KEYED NOTES

1. INSTALL 6' DIA TYPE "E" MANHOLE. SEE DETAIL A5/C-503.
2. INSTALL 4' DIA TYPE "E" MANHOLE. SEE DETAIL A5/C-503.
3. INSTALL 18" DIA HDPE STORM DRAIN PIPE.
4. INSTALL 12" DIA HDPE STORM DRAIN PIPE.
5. INSTALL 12" INLINE DRAIN BASIN WITH PEDESTRIAN GRATE. SEE DETAIL F4/C-502.
6. INSTALL 12" 45° HDPE BEND.
7. INSTALL 12" HDPE CROSS WITH 2-12" 45° BENDS.
8. INSTALL 8' TRENCH INLET. SEE DETAIL C1/C-501.
9. INSTALL ROOF DRAIN CONNECTION ON ALL PRIMARY ROOF DRAINS. SEE DETAIL E1/C-502.
10. INSTALL OVERFLOW ROOF DRAIN END SECTION ON ALL SECONDARY ROOF DRAINS. SEE DETAIL F5/C-503.
11. INSTALL 12" 90° HDPE BEND WITH CLEANOUT.
12. INSTALL SINGLE TYPE "D" INLET. SEE DETAIL C1/C-503.
13. INSTALL 12" 22.5° HDPE BEND.
14. CONNECT TO EXISTING 18" SD.
15. MANHOLE BY OTHERS.
16. STORMDRAIN BY OTHERS.
17. INLET BY OTHERS.

WILSON & COMPANY
2600 THE AMERICAN RD. SE SUITE 100
RIO RANCHO, NM 87124
PHONE: 505-898-8021
FAX: 505-898-8501
www.wilsonco.com

CONSULTANTS

SEAL

JENNIFER M. JAMES
NEW MEXICO
19416
02/10/2010
REGISTERED PROFESSIONAL ENGINEER

PROJECT NAME
MANZANO HIGH SCHOOL
DRAINAGE MASTER PLAN
PHASE II IMPROVEMENTS

MARK	DATE	DESCRIPTION

PROJECT NO:	
DESIGNED BY:	JMF
DRAWN BY:	AJM
CHECKED BY:	MJI
DATE:	

SHEET TITLE
PLAN AND PROFILE MAIN SD

SHEET NO:
C-107

M:\DS\09-600-039-00\CADD\SHEETS\03_PNP\96039_PNP-03.dwg 2/10/2010 1:11:08 PM MST

HALLWAY A & B DRAINAGE IMPROVEMENTS TO BE CONSTRUCTED AS PART OF A FUTURE CONTRACT.

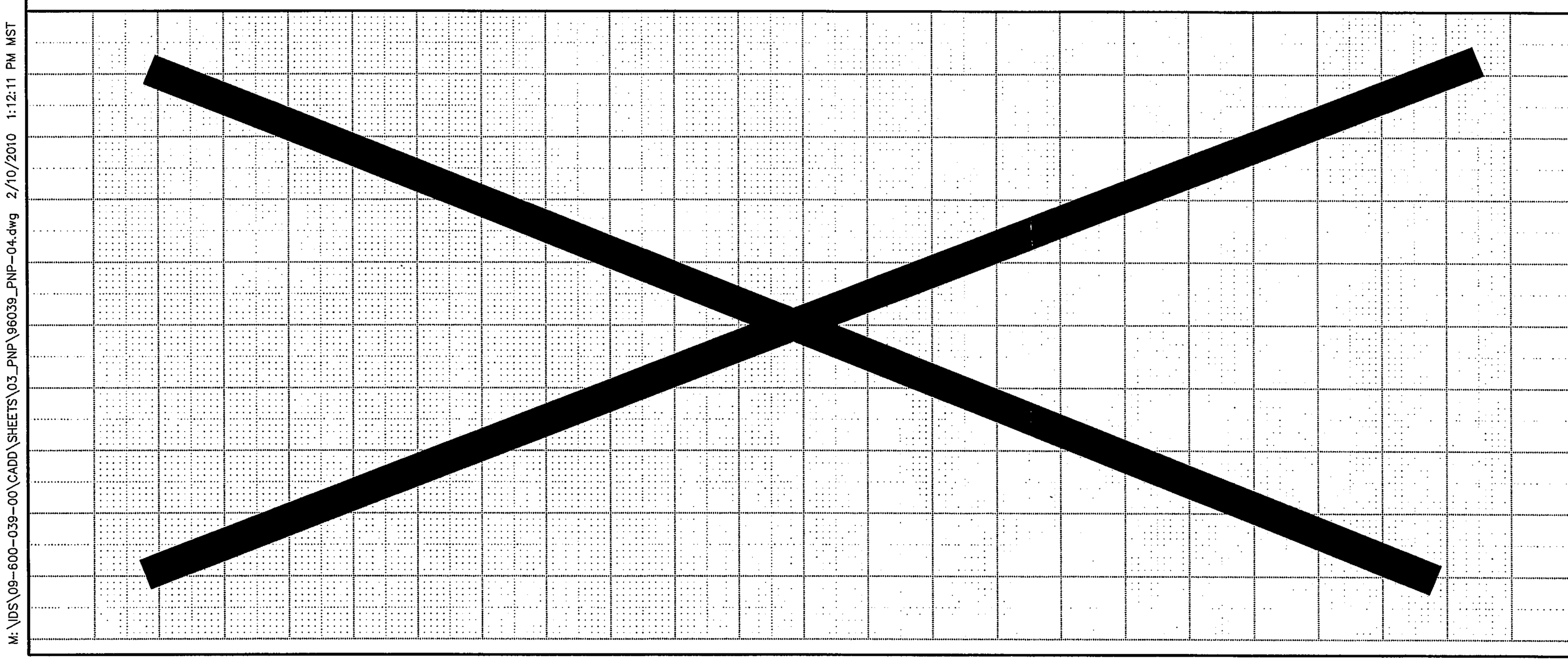

KEYED NOTES

WILSON & COMPANY
2600 THE AMERICAN RD. SE SUITE 100
RIO RANCHO, NM 87124
PHONE: 505-898-8021
FAX: 505-898-8501
www.wilsonco.com

CONSULTANTS

SEAL

JENNIFER M. FLOR
NEW MEXICO
19416
01/10/2010
REGISTERED PROFESSIONAL ENGINEER

PROJECT NAME
MANZANO HIGH SCHOOL
DRAINAGE MASTER PLAN
PHASE II IMPROVEMENTS

MARK	DATE	DESCRIPTION

PROJECT NO:	
DESIGNED BY:	JMF
DRAWN BY:	AJM
CHECKED BY:	MJI
DATE:	

SHEET TITLE
PLAN AND PROFILE HALLWAYS A & B

SHEET NO:
C-108

M:\IDS\09-600-039-00\CADD\SHEETS\03_PNP\96039_PNP-04.dwg 2/10/2010 1:12:11 PM MST

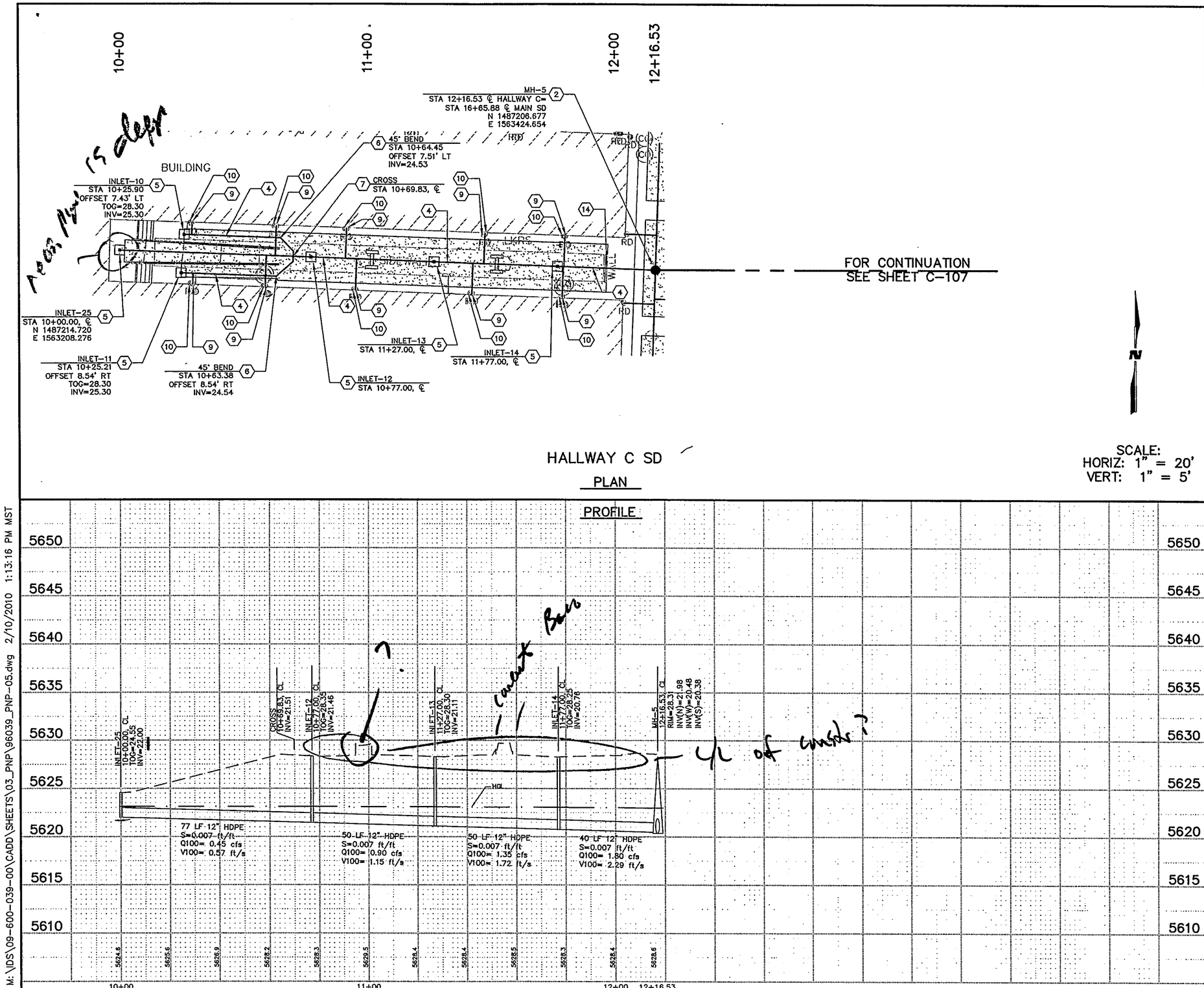

KEYED NOTES

1. INSTALL 6' DIA TYPE "E" MANHOLE. SEE DETAIL A5/C-503.
2. INSTALL 4' DIA TYPE "E" MANHOLE. SEE DETAIL A5/C-503.
3. INSTALL 18" DIA HDPE STORM DRAIN PIPE.
4. INSTALL 12" DIA HDPE STORM DRAIN PIPE.
5. INSTALL 12" INLINE DRAIN BASIN WITH PEDESTRIAN GRATE. SEE DETAIL F4/C-502.
6. INSTALL 12" 45° HDPE BEND.
7. INSTALL 12" HDPE CROSS WITH 2-12" 45° BENDS.
8. INSTALL 8' TRENCH INLET. SEE DETAIL C1/C-501.
9. INSTALL ROOF DRAIN CONNECTION ON ALL PRIMARY ROOF DRAINS. SEE DETAIL E1/C-502.
10. INSTALL OVERFLOW ROOF DRAIN END SECTION ON ALL SECONDARY ROOF DRAINS. SEE DETAIL F5/C-503.
11. INSTALL 12" 90° HDPE BEND WITH CLEANOUT.
12. INSTALL SINGLE TYPE "D" INLET. SEE DETAIL C1/C-503.
13. INSTALL 12" 22.5° HDPE BEND.
14. BORE AND JACK STORM DRAIN UNDER EXISTING WALL PER COA STD DWG 2180. INSTALL 22" DIA STANDARD CLASS CASING PIPE WITH SPACERS PER COA STD SPECS SECTION 710. BEGIN AND END BORE AND JACK 10' FROM EACH SIDE OF WALL.

WILSON & COMPANY
2600 THE AMERICAN RD. SE SUITE 100
RIO RANCHO, NM 87124
PHONE: 505-898-8021
FAX: 505-898-8501
www.wilsonco.com

CONSULTANTS

SEAL

JENNIFER M. J. FOR
NEW MEXICO
19416
RECEIVED
REGISTERED PROFESSIONAL ENGINEER

PROJECT NAME
MANZANO HIGH SCHOOL
DRAINAGE MASTER PLAN
PHASE II IMPROVEMENTS

MARK	DATE	DESCRIPTION

PROJECT NO:	
DESIGNED BY:	JMF
DRAWN BY:	AJM
CHECKED BY:	MJI
DATE:	

SHEET TITLE
PLAN AND PROFILE HALLWAY C

SHEET NO:
C-109

M:\DS\09-600-039-00\CADD\SHEETS\03_PNP\96039_PNP-05.dwg 2/10/2010 1:13:16 PM MST

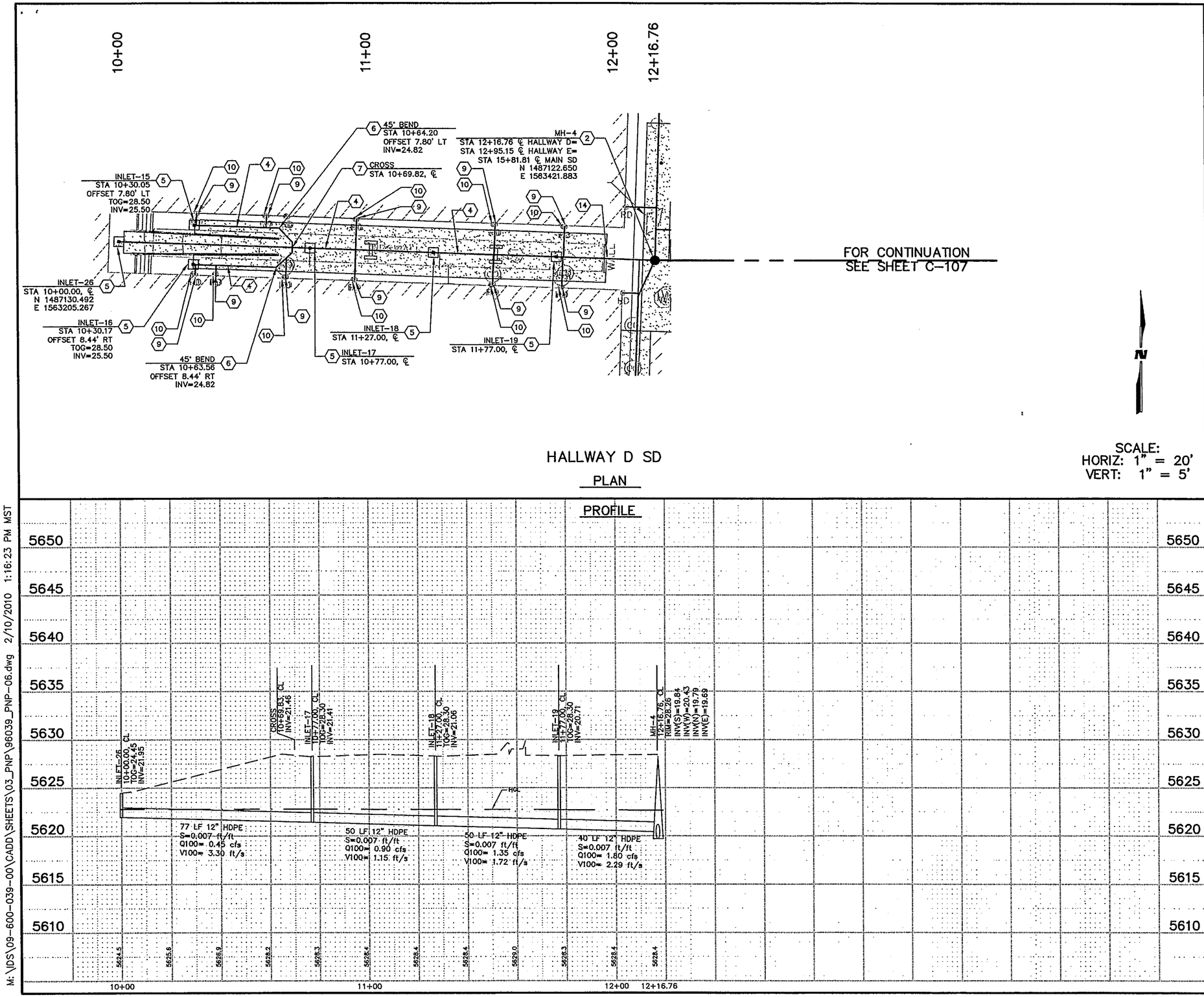

KEYED NOTES

1. INSTALL 6' DIA TYPE "E" MANHOLE. SEE DETAIL A5/C-503.
2. INSTALL 4' DIA TYPE "E" MANHOLE. SEE DETAIL A5/C-503.
3. INSTALL 18" DIA HDPE STORM DRAIN PIPE.
4. INSTALL 12" DIA HDPE STORM DRAIN PIPE.
5. INSTALL 12" INLINE DRAIN BASIN WITH PEDESTRIAN GRATE. SEE DETAIL F4/C-502.
6. INSTALL 12" 45° HDPE BEND.
7. INSTALL 12" HDPE CROSS WITH 2-12" 45° BENDS.
8. INSTALL 8' TRENCH INLET. SEE DETAIL C1/C-501.
9. INSTALL ROOF DRAIN CONNECTION ON ALL PRIMARY ROOF DRAINS. SEE DETAIL E1/C-502.
10. INSTALL OVERFLOW ROOF DRAIN END SECTION ON ALL SECONDARY ROOF DRAINS. SEE DETAIL F5/C-503.
11. INSTALL 12" 90° HDPE BEND WITH CLEANOUT.
12. INSTALL SINGLE TYPE "D" INLET. SEE DETAIL C1/C-503.
13. INSTALL 12" 22.5° HDPE BEND.
14. BORE AND JACK STORM DRAIN UNDER EXISTING WALL PER COA STD DWG 2180. INSTALL 22" DIA STANDARD CLASS CASING PIPE WITH SPACERS PER COA STD SPECS SECTION 710. BEGIN AND END BORE AND JACK 10' FROM EACH SIDE OF WALL.

WILSON & COMPANY
2600 THE AMERICAN RD. SE SUITE 100
RIO RANCHO, NM 87124
PHONE: 505-898-8021
FAX: 505-898-8501
www.wilsonco.com

CONSULTANTS

SEAL

JENNIFER M. JOHNSON
NEW MEXICO
19416
10/20/09
REGISTERED PROFESSIONAL ENGINEER

PROJECT NAME
MANZANO HIGH SCHOOL
DRAINAGE MASTER PLAN
PHASE II IMPROVEMENTS

MARK	DATE	DESCRIPTION

PROJECT NO:	
DESIGNED BY:	JMF
DRAWN BY:	AJM
CHECKED BY:	MJI
DATE:	

SHEET TITLE
PLAN AND PROFILE HALLWAY D

SHEET NO:
C-110

M:\DS\09-600-039-00\CADD\SHEETS\03_PNP\96039_PNP-06.dwg 2/10/2010 1:16:23 PM MST

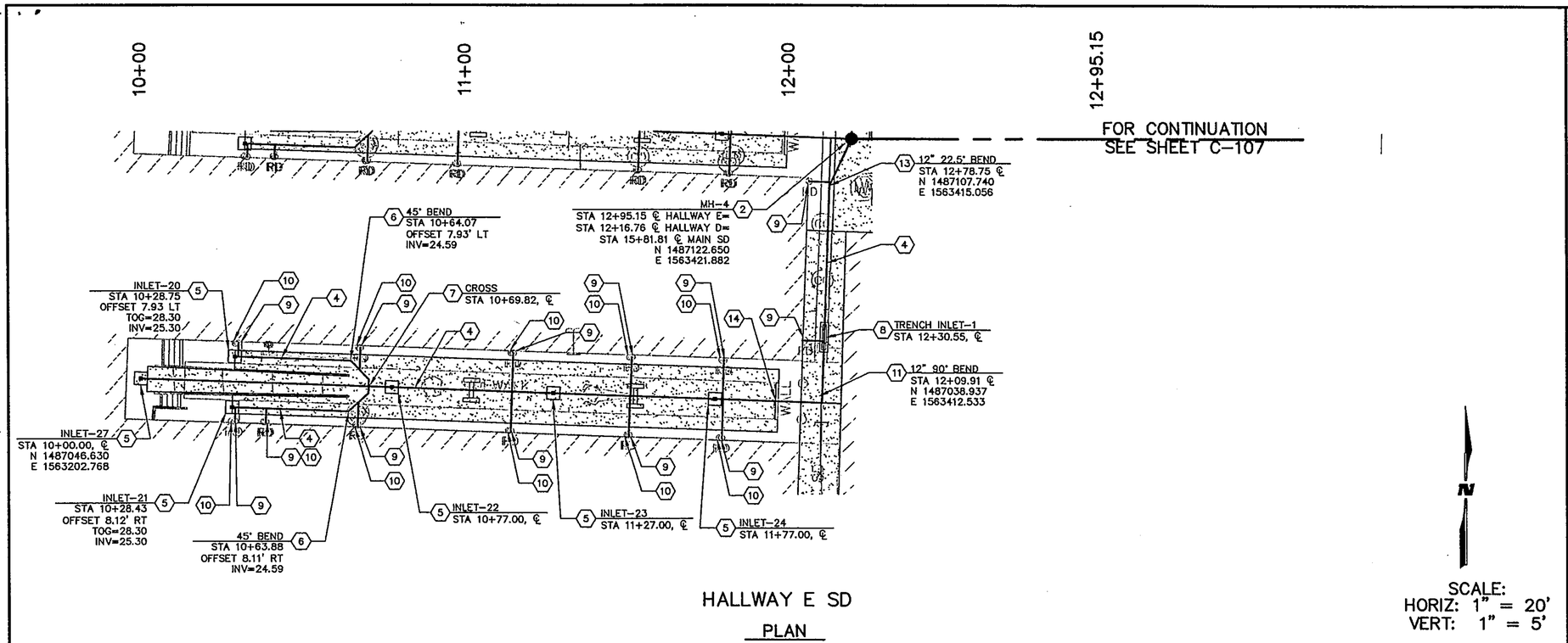

HALLWAY E SD

PLAN

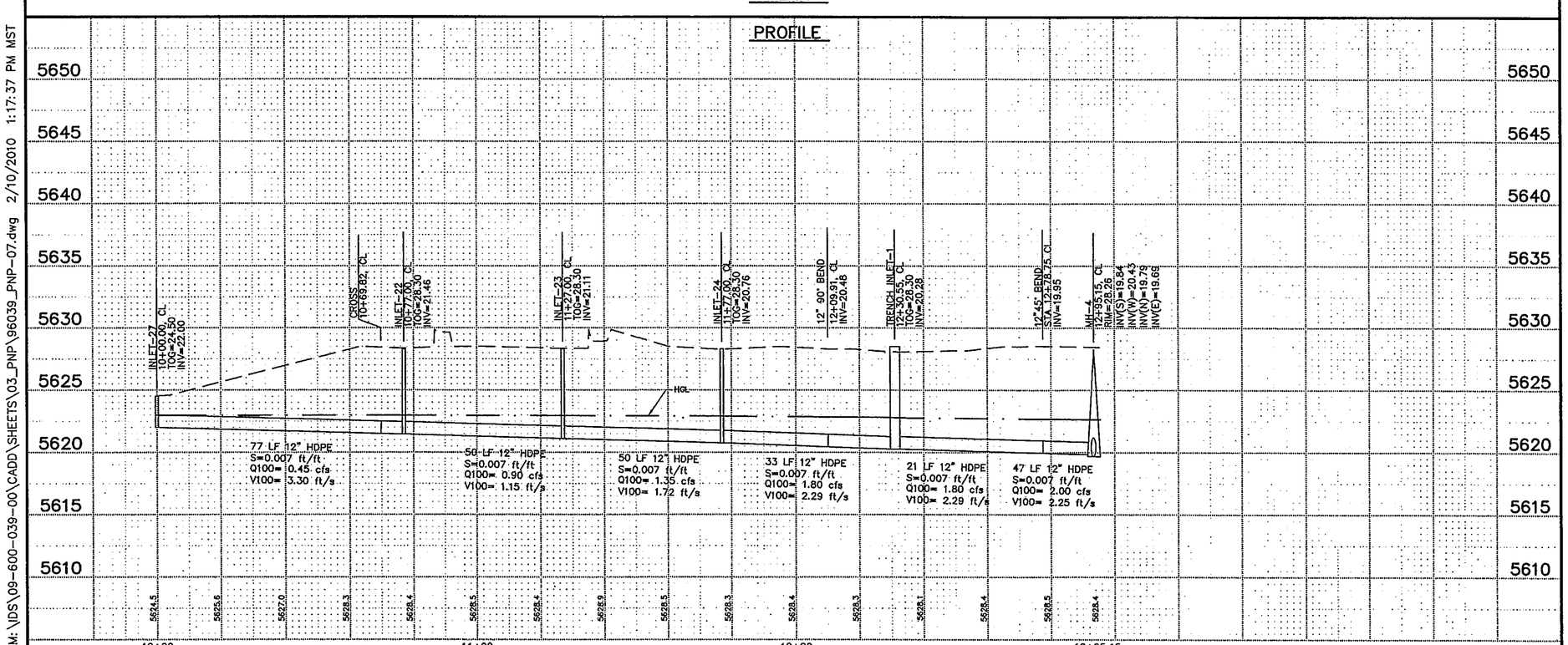

KEYED NOTES

1. INSTALL 6' DIA TYPE "E" MANHOLE. SEE DETAIL A5/C-503.
2. INSTALL 4' DIA TYPE "E" MANHOLE. SEE DETAIL A5/C-503.
3. INSTALL 18" DIA HDPE STORM DRAIN PIPE.
4. INSTALL 12" DIA HDPE STORM DRAIN PIPE.
5. INSTALL 12" INLINE DRAIN BASIN WITH PEDESTRIAN GRATE. SEE DETAIL F4/C-502.
6. INSTALL 12" 45° HDPE BEND.
7. INSTALL 12" HDPE CROSS WITH 2-12" 45° BENDS.
8. INSTALL 8' TRENCH INLET. SEE DETAIL C1/C-501.
9. INSTALL ROOF DRAIN CONNECTION ON ALL PRIMARY ROOF DRAINS. SEE DETAIL E1/C-502.
10. INSTALL OVERFLOW ROOF DRAIN END SECTION ON ALL SECONDARY ROOF DRAINS. SEE DETAIL F5/C-503.
11. INSTALL 12" 90° HDPE BEND WITH CLEANOUT.
12. INSTALL SINGLE TYPE "D" INLET. SEE DETAIL C1/C-503.
13. INSTALL 12" 22.5° HDPE BEND.
14. BORE AND JACK STORM DRAIN UNDER EXISTING WALL PER COA STD DWG 2180. INSTALL 22" DIA STANDARD CLASS CASING PIPE WITH SPACERS PER COA STD SPECS SECTION 710. BEGIN AND END BORE AND JACK 10' FROM EACH SIDE OF WALL.

WILSON & COMPANY
2600 THE AMERICAN RD. SE SUITE 100
RIO RANCHO, NM 87124
PHONE: 505-898-8021
FAX: 505-898-8501
www.wilsonco.com

CONSULTANTS

SEAL

JENNIFER M. FLOR
NEW MEXICO
19416
REGISTERED PROFESSIONAL ENGINEER
01/12/2010

PROJECT NAME
MANZANO HIGH SCHOOL
DRAINAGE MASTER PLAN
PHASE II IMPROVEMENTS

MARK	DATE	DESCRIPTION

PROJECT NO:	
DESIGNED BY:	JMF
DRAWN BY:	AJM
CHECKED BY:	MJI
DATE:	

SHEET TITLE

PLAN AND PROFILE HALLWAY E

SHEET NO:

C-111

M:\IDS\09-600-039-00\CADD\SHEETS\03_PNP\96039_PNP-07.dwg 2/10/2010 1:17:37 PM MST

Appendix B
StormCAD Files

STORMCAD SUMMARY

Label	Slope (Calculated) (ft/ft)	Length (Unified) (ft)	Diameter (in)	Manning's n	Flow (ft^3/s)	Velocity (Average) (ft/s)	Invert (Upstream) (ft)	Invert (Downstream) (ft)	Elevation Ground (Start) (ft)	Elevation Ground (Stop) (ft)	Cover (Start) (ft)	Cover (Stop) (ft)	Hydraulic Grade Line (In) (ft)	Hydraulic Grade Line (Out) (ft)
B5	0.007	32	12	0.01	1.8	4.81	5624.97	5624.75	5628.2	5628.44	2.23	2.69	5625.54	5625.24
C1	0.007	77	12	0.01	0.45	0.57	5622	5621.46	5624.55	5628.35	1.55	5.89	5623.33	5623.32
C2	0.007	50	12	0.01	0.9	1.15	5621.46	5621.11	5628.35	5628.3	5.89	6.19	5623.32	5623.3
C3	0.007	50	12	0.01	1.35	1.72	5621.11	5620.76	5628.3	5628.25	6.19	6.49	5623.29	5623.25
C4	0.007	40	12	0.01	1.8	2.29	5620.76	5620.48	5628.25	5628.31	6.49	6.83	5623.24	5623.18
CO-13	0.01	15	12	0.01	1.1	4.86	5625.5	5625.35	5628	5628.52	1.5	2.17	5625.94	5625.7
CO-16	0.01	15	12	0.01	1.1	4.86	5625.6	5625.45	5628.1	5628.3	1.5	1.85	5626.04	5625.8
CO-19	0.007	20	12	0.01	1.1	4.36	5625.5	5625.35	5628	5628.27	1.5	1.92	5625.94	5625.72
D1	0.007	77	12	0.01	0.45	3.3	5621.95	5621.41	5624.45	5628.3	1.5	5.89	5622.6	5622.6
D2	0.007	50	12	0.01	0.9	1.15	5621.41	5621.06	5628.3	5628.3	5.89	6.24	5622.6	5622.58
D3	0.007	50	12	0.01	1.35	1.72	5621.06	5620.71	5628.3	5628.3	6.24	6.59	5622.58	5622.53
D4	0.007	40	12	0.01	1.8	2.29	5620.71	5620.43	5628.3	5628.26	6.59	6.83	5622.53	5622.47
E1	0.007	77	12	0.01	0.45	3.3	5622	5621.46	5624.5	5628.3	1.5	5.84	5622.95	5622.94
E2	0.007	50	12	0.01	0.9	1.15	5621.46	5621.11	5628.3	5628.3	5.84	6.19	5622.94	5622.92
E3	0.007	50	12	0.01	1.35	1.72	5621.11	5620.76	5628.3	5628.3	6.19	6.54	5622.92	5622.88
E4	0.007	33	12	0.01	1.8	2.29	5620.76	5620.53	5628.3	5628.65	6.54	7.12	5622.87	5622.82
E5	0.007	21	12	0.01	1.8	2.29	5620.43	5620.28	5628.65	5628.5	7.22	7.22	5622.7	5622.67
E6	0.007	47	12	0.01	2	2.55	5620.28	5619.95	5628.5	5628.3	7.22	7.35	5622.64	5622.56
E7	0.007	16	12	0.01	2	2.55	5619.95	5619.84	5628.3	5628.26	7.35	7.42	5622.56	5622.53
M1	0.056	33	18	0.01	11.8	16.83	5614.65	5612.81	5627.25	5621.87	11.1	7.56	5615.96	5613.58
M2	0.007	178	18	0.01	11.8	7.36	5616.9	5615.65	5632.61	5627.25	14.21	10.1	5618.21	5616.93
M3	0.007	269	18	0.01	11.8	6.68	5618.88	5617	5636.48	5632.61	16.1	14.11	5620.86	5618.85
M4	0.007	102	18	0.01	11.8	6.68	5619.69	5618.98	5628.26	5636.48	7.07	16	5622.33	5621.56
M5	0.007	13	18	0.01	8	4.53	5619.88	5619.79	5628.27	5628.26	6.89	6.97	5622.82	5622.78
M6	0.007	59	18	0.01	6.9	3.9	5620.3	5619.88	5628.3	5628.27	6.5	6.89	5622.97	5622.82
M7	0.007	12	18	0.01	5.8	3.28	5620.38	5620.3	5628.31	5628.3	6.43	6.5	5622.99	5622.97
M8	0.026	60	18	0.01	4	9.45	5623.54	5621.98	5628.44	5628.31	3.4	4.83	5624.31	5623.03
M9	0.007	3	18	0.01	2.2	4.97	5623.66	5623.64	5628.52	5628.44	3.36	3.3	5624.32	5624.33
M10	0.007	53	18	0.01	1.1	4.1	5624.03	5623.66	5628.74	5628.52	3.21	3.36	5624.42	5624.32
M11	0.007	36	18	0.01	1.1	4.09	5624.28	5624.03	5629.05	5628.74	3.27	3.21	5624.67	5624.35

~2.5 cfs

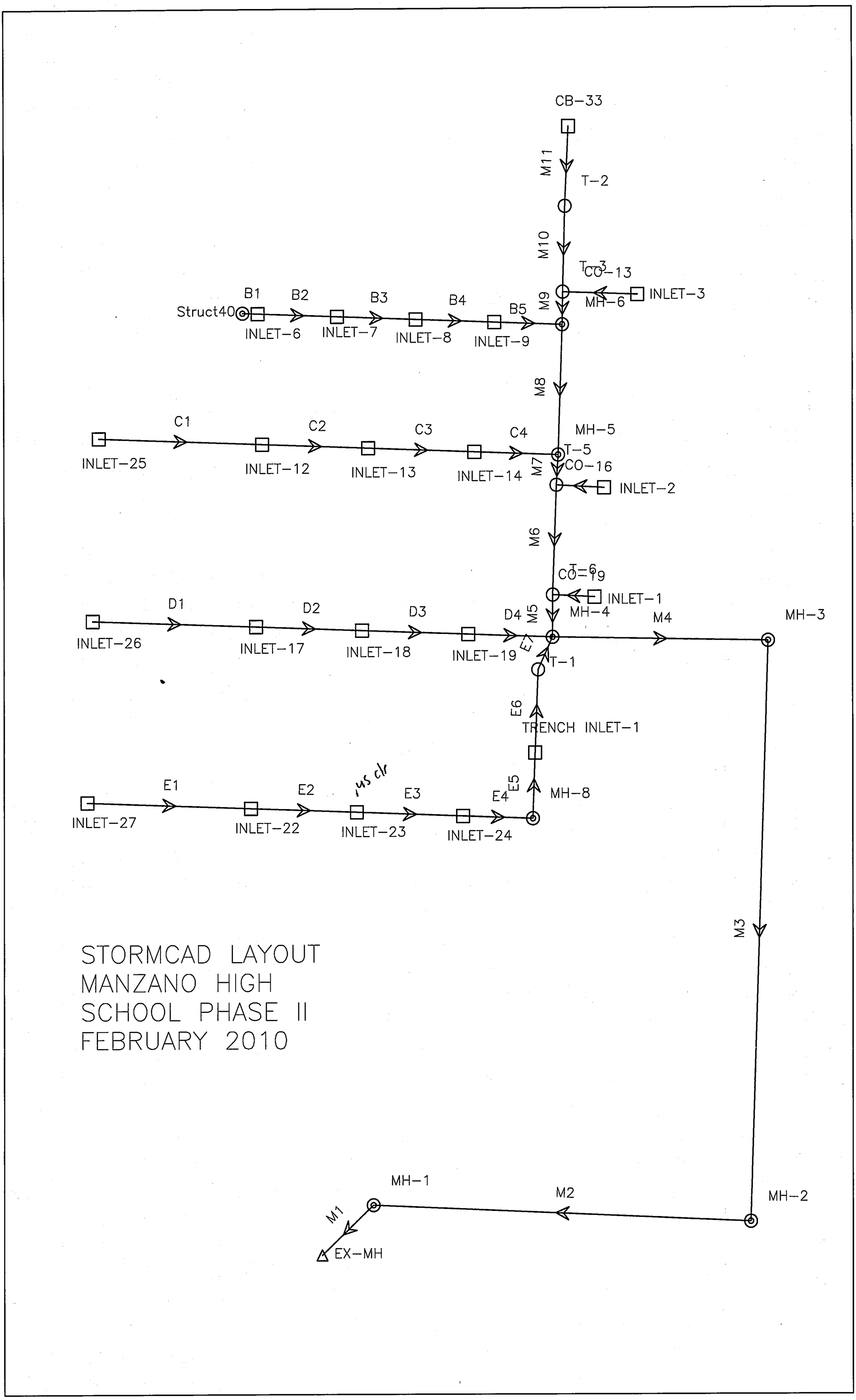

STORMCAD LAYOUT
MANZANO HIGH
SCHOOL PHASE II
FEBRUARY 2010

Manzano High School
Phase II Storm Drain Improvements

Grading and Drainage Report
Appendices

RECEIVED
FEB 10 2010
HYDROLOGY
SECTION

Summary

```
AHYMO PROGRAM SUMMARY TABLE (AHYMO_97) -                          - VERSION:  1997.02c      RUN DATE (MON/DAY/YR) =02/09/2010
INPUT FILE = M:\IDS\09932B~1\AE_DATA\CALCS\AHYMO\1006PR~1.HMI                              USER NO.= AHYMO-C-9803c01UNMLIB-AH

                            FROM  TO                    PEAK        RUNOFF                TIME TO    CFS       PAGE =   1
                HYDROGRAPH   ID   ID        AREA     DISCHARGE     VOLUME      RUNOFF      PEAK     PER
COMMAND       IDENTIFICATION  NO.  NO.     (SQ MI)     (CFS)       (AC-FT)    (INCHES)   (HOURS)   ACRE      NOTATION

*S    AHYMO_97 MODEL FOR: Manzano HS
*S    PREPARED FOR:  APS
*S    PREPARED BY:  Wilson & Co
*S    MODEL DESCRIPTION -
*S 1. 100-YEAR 6-HOUR RAINFALL EVENT
*S 2. THIS MODEL ASSUMES DEVELOPED CONDITIONS
*S
START                                                                                                   TIME=       .00
LOCATION                        ALBUQUERQUE
*S***** AHYMO - 1006.HMI
*S***** HYDROLOGY FOR MANZANO ONSITE
RAINFALL  TYPE= 1                                                                                       RAIN6=    2.900
*S***** BASIN 101 - ONSITE EXISTING (5.99 ACRES)
COMPUTE NM HYD        101.00   -    1        .00940       31.54       1.324      2.64117    1.499    5.242 PER IMP= 100.00
*S***** BASIN 102 - ONSITE EXISTING (2.27 ACRES)
COMPUTE NM HYD        102.00   -    2        .00350       11.75        .493      2.64117    1.499    5.245 PER IMP= 100.00
*S***** BASIN 103 - ONSITE EXISTING (6.12 ACRES)
COMPUTE NM HYD        103.00   -    3        .00956       23.40        .896      1.75685    1.499    3.825 PER IMP=  50.00
*S***** BASIN 104 - ONSITE EXISTING (1.97 ACRES)
COMPUTE NM HYD        104.00   -    4        .00310        9.73        .398      2.40640    1.499    4.903 PER IMP=  85.00
*S***** BASIN 105 - ONSITE EXISTING (1.90 ACRES)
COMPUTE NM HYD        105.00   -    5        .00300        9.64        .398      2.48466    1.499    5.020 PER IMP=  90.00
*S***** BASIN 106 - ONSITE EXISTING (0.39 ACRES)
COMPUTE NM HYD        106.00   -    6        .00060        1.99        .082      2.56291    1.499    5.173 PER IMP=  95.00
*S***** BASIN 107 - ONSITE EXISTING (0.58 ACRES)
COMPUTE NM HYD        107.00   -    7        .00090        1.66        .053      1.11250    1.499    2.887 PER IMP=  10.00
*S***** BASIN 110 - ONSITE EXISTING (5.78 ACRES)
COMPUTE NM HYD        110.00   -   10        .00900       28.87       1.193      2.48466    1.499    5.012 PER IMP=  90.00
*S***** BASIN 111 - ONSITE EXISTING (0.33 ACRES)
COMPUTE NM HYD        111.00   -   11        .00051        1.69        .070      2.56291    1.499    5.178 PER IMP=  95.00
*S***** BASIN 112 - ONSITE EXISTING (1.11 ACRES)
COMPUTE NM HYD        112.00   -   12        .00170        5.55        .230      2.53161    1.499    5.098 PER IMP=  93.00
*S***** BASIN 113 - ONSITE EXISTING (6.75 ACRES)
COMPUTE NM HYD        113.00   -   13        .01050       21.25        .727      1.29847    1.499    3.162 PER IMP=  20.00
*S***** BASIN 114 - ONSITE EXISTING (5.54 ACRES)
COMPUTE NM HYD        114.00   -   14        .00870       17.58        .587      1.26442    1.499    3.158 PER IMP=  15.00
*S***** BASIN 115 - ONSITE EXISTING (4.37 ACRES)
COMPUTE NM HYD        115.00   -   15        .00680       12.11        .393      1.08440    1.499    2.783 PER IMP=  10.00
*S***** BASIN 120A - ONSITE PROPOSED (1.0 ACRES)
COMPUTE NM HYD        120.00   -   20        .00480       15.89        .661      2.58178    1.499    5.172 PER IMP=  95.00
*S***** BASIN 121 - ONSITE EXISTING (2.10 ACRES)
COMPUTE NM HYD        121.00   -   21        .00330       10.60        .437      2.48466    1.499    5.018 PER IMP=  90.00
*S***** BASIN 122 - ONSITE EXISTING (1.07 ACRES)
COMPUTE NM HYD        122.00   -   22        .00170        5.71        .239      2.64117    1.499    5.250 PER IMP= 100.00
*S***** BASIN 123 - ONSITE EXISTING (3.44 ACRES)
COMPUTE NM HYD        123.00   -   23        .00540       17.73        .738      2.56291    1.499    5.131 PER IMP=  95.00
*S***** BASIN 124 - ONSITE EXISTING (6.22 ACRES)
COMPUTE NM HYD        124.00   -   24        .00970       31.11       1.285      2.48466    1.499    5.012 PER IMP=  90.00
*S***** BASIN 130A - ONSITE PROPOSED (1.0 ACRES)
```

COMMAND	HYDROGRAPH IDENTIFICATION	FROM ID NO.	TO ID NO.	AREA (SQ MI)	PEAK DISCHARGE (CFS)	RUNOFF VOLUME (AC-FT)	RUNOFF (INCHES)	TIME TO PEAK (HOURS)	CFS PER ACRE	PAGE = 2 NOTATION
COMPUTE NM HYD	130.00	-	30	.00210	6.66	.269	2.40360	1.499	4.953	PER IMP= 80.00
*S***** BASIN 131 - ONSITE EXISTING (1.35 ACRES)										
COMPUTE NM HYD	131.00	-	31	.00210	6.75	.278	2.48466	1.499	5.024	PER IMP= 90.00
*S***** BASIN 132 - OFFSITE EXISTING (1.24 ACRES)										
COMPUTE NM HYD	131.00	-	32	.00190	6.11	.252	2.48466	1.499	5.026	PER IMP= 90.00
ADD HYD	200.00	3& 4	40	.01266	33.13	1.294	1.91586	1.499	4.089	
ADD HYD	201.00	40& 5	41	.01566	42.77	1.691	2.02481	1.499	4.267	
ADD HYD	202.00	41& 6	42	.01626	44.75	1.773	2.04465	1.499	4.300	
ADD HYD	203.00	42& 7	43	.01716	46.42	1.827	1.99575	1.499	4.226	
*SEXISTING POND 1 - ADJACENT TO WILSON STADIUM										
ADD HYD	300.00	11&12	50	.00221	7.24	.299	2.53861	1.499	5.116	
ADD HYD	301.00	50&13	51	.01271	28.48	1.026	1.51409	1.499	3.502	
ADD HYD	302.00	51&14	52	.02141	46.07	1.613	1.41262	1.499	3.362	
ADD HYD	303.00	52&10	53	.03041	74.94	2.806	1.72989	1.499	3.850	
ADD HYD	400.00	20&21	60	.00810	26.49	1.098	2.54215	1.499	5.109	
ADD HYD	401.00	60&22	61	.00980	32.20	1.338	2.55930	1.499	5.134	
ADD HYD	402.00	61&23	62	.01520	49.93	2.076	2.56057	1.499	5.133	
ADD HYD	500.00	24&15	70	.01650	43.22	1.679	1.90755	1.499	4.093	
ADD HYD	600.00	70&62	80	.03170	93.15	3.754	2.22067	1.499	4.592	
ADD HYD	601.00	80&53	81	.06211	168.09	6.560	1.98038	1.499	4.229	
*SEXISTING POND 2 - SOCCER FIELD										
ROUTE RESERVOIR	700.00	80	82	.03170	8.29	3.754	2.22067	2.198	.409	AC-FT= 2.498
FINISH										

CITY OF ALBUQUERQUE

Planning Department
Transportation Development Services Section

June 3, 2009

John Arthur Blessen, P.E.,
Soleil West Architects
11930 Menaul NE, Ste. 109
Albuquerque, NM 87112

Re: Approval of Permanent Certificate of Occupancy (C.O.) for
Manzano High School Phase 3A Addition, [K-22 / D020]
12200 Lomas Blvd NE
Engineer's Stamp 06/02/09

Dear Mr. Blessen:

The TCL/ Letter of Certification submitted on June 2, 2009 is sufficient for acceptance by this office for Final Certificate of Occupancy (C.O.). Notification has been made the Building and Safety Section.

Sincerely,

Nilo E. Salgado-Fernandez, P.E.
Senior Traffic Engineer
Development and Building Services
Planning Department

c: Engineer
Hydrology file
CO Clerk

PO Box 1293
Albuquerque
NM 87103
www.cabq.gov

SOLEIL WEST
ARCHITECTURE • PLANNING • INTERIOR DESIGN

Conscious Design for the Environment

TRAFFIC CERTIFICATION
MONZANO HIGH SCHOOL ADDITION

I, J ARTHUR BLESSEN, NMRE 13481, OF THE FIRM SOLEIL WEST ARCHITECTS, HEREBY CERTIFY THAT THIS PROJECT IS IN SUBSTANTIAL COMPLIANCE WITH AND IN ACCORDANCE WITH THE DESIGN INTENT OF THE TCL APPROVED PLAN DATED 4/22/08. THE RECORD INFORMATION EDITED ONTO THE ORIGINAL DESIGN DOCUMENT HAS BEEN OBTAINED BY SOLEIL WEST. I FURTHER CERTIFY THAT I HAVE PERSONALLY VISITED THE PROJECT SITE ON 5/29/09 AND HAVE DETERMINED BY VISUAL INSPECTION THAT THE SURVEY DATA PROVIDED IS REPRESENTATIVE OF ACTUAL SITE CONDITIONS AND IS TRUE AND CORRECT TO THE BEST OF MY KNOWLEDGE AND BELIEF. THIS CERTIFICATION IS SUBMITTED IN SUPPORT OF A REQUEST FOR PERMENANT CERTIFICATE OF OCCUPANCY. WITH THE FOLLOWING PROVISIONS:

THE LANDSCAPING AROUND THE CLASSROOM ADDITION HAS NOT BEEN INSTALLED. THIS WORK IS TO BE PROVIDED BY THE OWNER UNDER SEPARATE CONTRAT, SEE ATTACHED LETTER FORM APS.

THE RECORD INFORMATION PRESENTED HEREON IS NOT NECESSARILY COMPLETE AND INTENDED ONLY TO VERIFY SUBSTANTIAL COMPLIANCE OF THE TRAFFIC ASPECTS OF THIS PROJECT. THOSE RELYING ON THE RECORD DOCUMENT ARE ADVISED TO OBTAIN INDEPENDENT VERIFICATION OF ITS ACCURACY BEFORE USING IT FOR ANY OTHER PURPOSE.

J Arthur Blessen PE, Soleil West Architects

6-2-09
Date

JOHN ARTHUR BLESSEN
NEW MEXICO
13481
REGISTERED PROFESSIONAL ENGINEER

RECEIVED
JUN 02 2009
HYDROLOGY SECTION

11930 MENAUL NE, SUITE 109 • ALBUQUERQUE, NM 87112 • (505) 293-1477
NEW MEXICO • NEVADA • ARIZONA • ILLINOIS

CITY OF ALBUQUERQUE

April 29, 2008

Kevin Balciar, R.A.
Soleil West
11930 Menaul NE Suite 109
Albuquerque, NM 87112

Re: Manzano High School Phase 3A Addition, 12200 Lomas Boulevard NE,
Traffic Circulation Layout
Architect's Stamp dated 4-22-08 (K22-D020)

Dear Mr. Balciar,

The TCL submittal received 4-14-08 is approved for Building Permit. The plan is stamped and signed as approved. A copy of this plan will be needed for each of the building permit plans. Please keep the original to be used for certification of the site for final C.O. for Transportation. **Public infrastructure or work done within City Right-of-Way shown on these plans is for information only and is not part of approval. A separate DRC and/or other appropriate permits are required to construct these items.**

If a temporary CO is needed, a copy of the original TCL that was stamped as approved by the City will be needed. This plan must include a statement that identifies the outstanding items that need to be constructed or the items that have not been built in "substantial compliance," as well as the signed and dated stamp of a NM registered architect or engineer. Submit this TCL with a completed Drainage and Transportation Information Sheet to Hydrology at the Development Services Center of Plaza Del Sol Building.

When the site is completed and a final C.O. is requested, use the original City stamped approved TCL for certification. A NM registered architect or engineer must stamp, sign, and date the certification TCL along with indicating that the development was built in "substantial compliance" with the TCL. Submit this certification TCL with a completed Drainage and Transportation Information Sheet to Hydrology at the Development Services Center of Plaza Del Sol Building.

Once verification of certification is completed and approved, notification will be made to Building Safety to issue Final C.O. To confirm that a final C.O. has been issued, call Building Safety at 924-3306.

Sincerely,

Kristal D. Metro, P.E.
Senior Engineer, Planning Dept.
Development and Building Services

C: File

PO Box 1293

Albuquerque

NM 87103

www.cabq.gov

ALBUQUERQUE PUBLIC SCHOOLS
Facilities Design & Construction

Expect Great Things!

M. Elizabeth Everitt, Ph.D.
SUPERINTENDENT

Karen Alarid, AIA
DIRECTOR

May 22, 2009

To Whom it may Concern:
City of Albuquerque Plancheck Department
Plaza del Sol Building
600 2nd Street, NW
Albuquerque, NM 87102

Subject: Building Permit Final Inspections - IBC
Re: **Manzano High School Phase 3A Classroom Addition**
12200 Lomas Blvd, NE, Albuquerque, NM 87112

Dear Sir/Madam:

APS understands that the City of Albuquerque is requiring a railing or fencing, and landscaping, along the south side of the newly completed addition to "K" Building at Manzano High School. These items were not required by the plancheck review process conducted previously by the City.

APS will engage on-call contractors to provide a railing or fencing, and landscaping including a retaining wall, along the south side of the addition to "K" building. It is in APS's interest to complete this work before the start of school on August 20, 2009. However, APS does not have the ability to control the schedules of its on-call contractors, so APS cannot guarantee that the work will be completed exactly by August 20, 2009. APS will work with its on-call contractors to make best efforts to complete the work by this date.

Albuquerque Public Schools

Tyler Mason, Staff Architect
Facilities Design + Construction

cc: Karen Alarid, Director, APS Facilities Design + Construction
Kevin Balciar, Soleil West Architects
David J. Martinez, APS FDC Construction Manager

MHS 3A L COA1

RECEIVED
JUN 02 2009
HYDROLOGY
SECTION