HYDROLOGY

K23/D21

TWO PLANS

2 PLANS FOR

SUNRISE JOINT

VENTURE

K23-D21

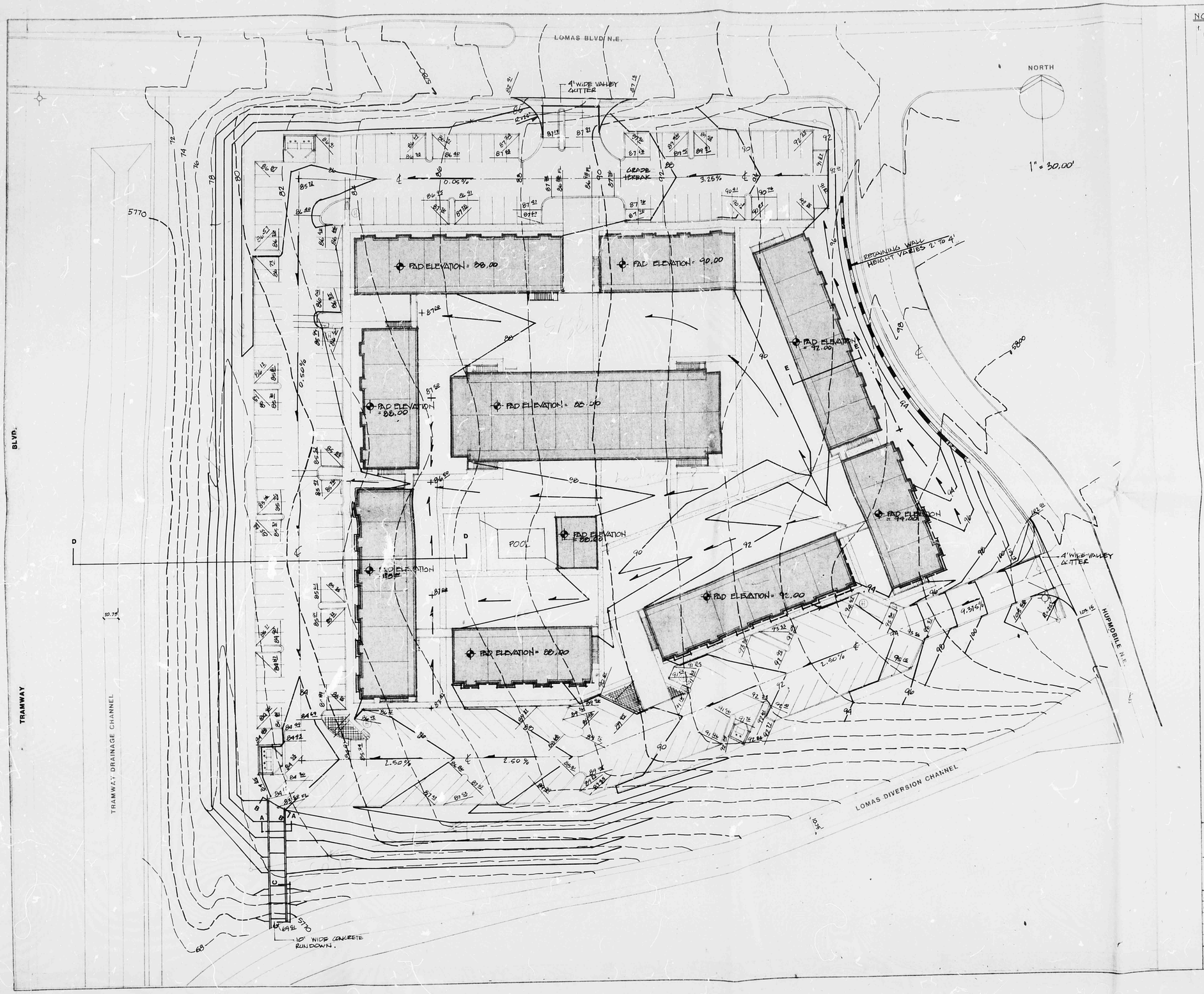

NOTES:

1 ALL ELEVATIONS ARE TOP OF CURB UNLESS OTHERWISE NOTED.

AS BUILT INFORMATION

CONTRACTOR
STAKED BY
INSPECTORS
FIELD CHANGE BY
FIELD
VERIFICATION BY
LANDMARKS
CORRECTED BY
MICRO-FILM INFORMATION
RECORDED BY
NO
DATE

BENCH MARKS

A.C.S. "JEFF R." - A BRASS TABLET STAMPED "JEFF. R. 1978" SET IN TOP OF A CONCRETE POST FLUSH WITH GROUND LOCATED AT THE SOUTHWEST INTERSECTION OF LOMAS AND TRAMWAY BLVD. NE. ELEV. = 5767.74

SURVEY INFORMATION

FIELD NOTES

NO	BY	DATE

ENGINEER'S SEAL

NO.	DATE	REMARKS	BY

REVISIONS

DESIGNED BY — DATE
DRAWN BY — DATE
CHECKED BY — DATE

CITY OF ALBUQUERQUE
MUNICIPAL DEVELOPMENT DEPARTMENT
ENGINEERING DIVISION

TITLE: **GRADING PLAN**
FOR SUNRISE JOINT VENTURE

APPROVALS	ENGINEER	DATE	APPROVALS	ENGINEER	DATE
City Engineer			Liquid Waste		
A.C.E.-Design			Traffic		
A.C.E.-Hydrology			Water		

DRAWING NO. | MAP NO. | SHEET 2 OF 3

K23/D21

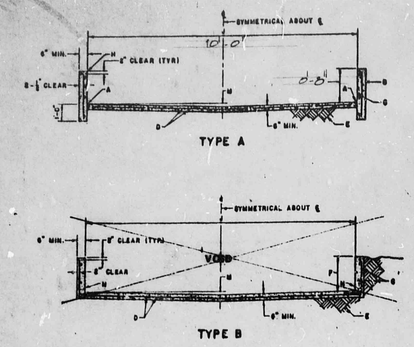

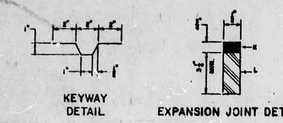

SECTION A-A

GENERAL NOTES:

1. CHANNEL DEPTHS EXCEEDING 8'-0" WILL REQUIRE SEPARATE DESIGN FOR FLOOR AND WALLS.
2. TYPE B LINING WILL BE USED ONLY WHERE NO UTILITIES ARE LOCATED OR PROPOSED.
3. UP TO 10'-0" WIDTH USE 4" INVERTED CROWN 10'-0" WIDTH AND OVER USE 6" INVERTED CROWN.
4. WARNING: THESE WALLS ARE NOT DESIGNED TO SUPPORT THE ADDITION OF GARDEN OR RETAINING TYPE OF WALLS. A SEPARATE DESIGN WILL BE SUBMITTED FOR THE CITY ENGINEER'S APPROVAL.
5. THE OUTSIDE OF DRAINAGE WALLS SHALL NOT EXTEND BEYOND EASEMENT LINES OR RIGHT-OF-WAY LINES.
6. WIDTH OF CHANNEL TO BE SPECIFIED BY THE CITY ENGINEER, BUT IN NO CASE IS THE WIDTH TO BE LESS THAN 8'-0", WHENEVER THE LENGTH OF THE DRAINAGE EASEMENT EXCEEDS 870' THE MIN. WIDTH SHALL BE 10'-0".

CONSTRUCTION NOTES:

A. ½" EXPANSION JOINT, SEE DETAIL BELOW.
B. NO. 4 REBARS AT 1'-0" O.C.
C. NO. 4 REBARS AT 1'-0" O.C.
D. NO. 4 REBARS AT 1'-0" O.C. BOTH WAYS.
E. 6" COMPACTED SOIL 95% PER ASTM D 1557.
F. AS SPECIFIED FOR 8" WALLS SEE NOTE NO.
G. [illegible] NO. 4 REBARS AT 1'-0" O.C.
H. 6" CONC. BLOCK WITH CORES FILLED WITH CONC AND NO. 4 REBARS INSERTED INTO CORES AT 1'-0" O.C., MAY BE SUBSTITUTED FOR FORMED CONC. WALLS.
J. WIDTH OF CHANNEL.
K. TWO COMPONENT URETHANE SEALANT.
L. POLYETHYLENE FOAM FILLER TO DEPTH OF SLAB.
M. SEE NOTE NO. 5.
N. KEYED CONSTRUCTION JOINT. SEE DETAIL BELOW.

REVISIONS	CITY OF ALBUQUERQUE
8-18-83 11-1-83	DRAINAGE TYPICAL LINING FOR DRAINAGE EASEMENTS DWG. K-12-4 NOV 1971

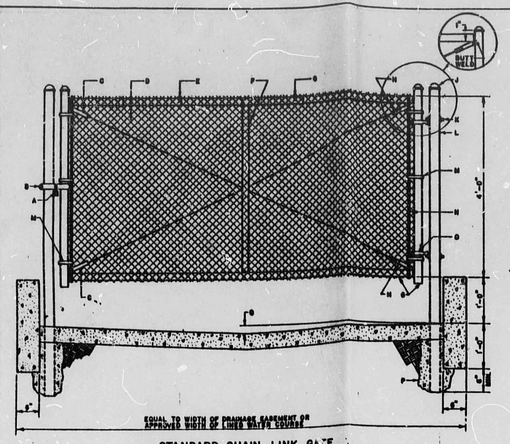

STANDARD CHAIN LINK GATE
FOR DRAINAGE EASEMENT BARRICADE

SECTION B-B

GENERAL NOTES:

1. THIS GATE TO BE USED AS SPECIFIED BY THE CITY HYDROLOGIST. FOR ALTERNATE DRAINAGE EASEMENT BARRICADE, SEE PIPE GATE DETAIL, DWG. NO. K-20.
2. FOR DRAINAGE EASEMENT LINING, SEE DWG. K-12
3. SPOT WELD OR UPSET THE THREADS ON NUTS AND BOLTS.
4. SINGLE GATE WILL BE USED FOR EASEMENTS OR LINED WATER COURSES 12' OR LESS.
5. FOR EASEMENTS OR LINED WATER COURSES GREATER THAN 12' DOUBLE LEAF GATES WILL BE USED WITH A CENTER LOCK POST INSERTED IN A PIPE SLEEVE IN THE CENTER OF OPENING.

CONSTRUCTION NOTES:

A. PADLOCK (TO BE FURNISHED BY THE CITY)
B. GATE LATCH FOR PADLOCK.
C. ⅜" TRUSS ROD WELDED AT CORNER.
D. NO. 9 GAUGE CHAIN LINK STEEL WIRE.
E. TIES AND TENSION BANDS AT 18" OR LESS.
F. WELDED BRACE
G. 2" O.D. TUBING FRAME NO. 069 WELDED
H. ⅜" THREADED TRUSS ROD AND BRACKET ATTACHMENT.
J. MALLEABLE ACORN CAP
K. J BOLT 4" THREADED.
L. END POST, SAME SIZE AS LINE POST.
M. STEEL TENSION BANDS SPACED AT 18" OR LESS
N. STRETCHER BAR
O. GATE CLAMP
P. 12" DIA. HOLES FILLED WITH PORTLAND CEMENT CONC.
Q. INVERTED CROWN, SEE NOTE 3, DWG. K-12.

REVISIONS	CITY OF ALBUQUERQUE
11-1-83	DRAINAGE STANDARD CHAIN LINK GATE DWG. K-21 NOV 1971

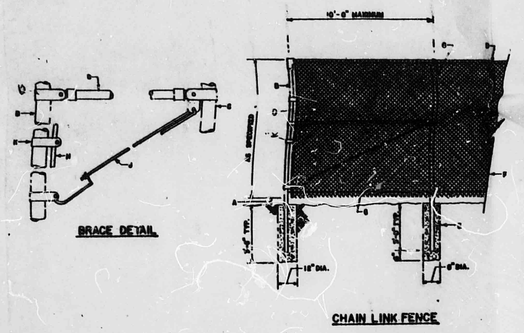

SECTION C-C

CONSTRUCTION NOTES:

A. DIMENSIONS ABOVE OR BELOW GRADE LEVEL WILL BE ON CONSTRUCTION DRAWING. IF NONE IS NOTED MESH IS FLUSH WITH GRADE LEVEL. IF BELOW GRADE, POSTS & WIRE MESH WILL BE COATED WITH BITUMINOUS MATERIAL.
B. CORNER POST.
C. LINE POSTS.
D. TOP & BRACE.
E. CONCRETE FOOTING.
F. 4" MESH No. 9 GAGE WIRE GALVANIZED FABRIC.
G. WIRE REINFORCEMENT, (WIRE GAUGE, LOCATION, AND NUMBER OF STRANDS AS SHOWN ON CONSTRUCTION DRAWINGS).
H. STRETCHER BAR - ⅜" x ¾" FLAT.
J. TRUSS BAR - ⅜" DIA.
K. TRUSS BAND.

REVISIONS	CITY OF ALBUQUERQUE
	DRAINAGE FENCE DETAILS DWG. K-22 NOV 1971

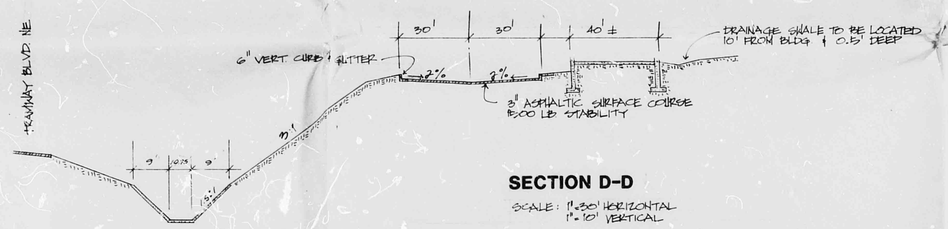

SECTION D-D

SCALE: 1" = 30' HORIZONTAL
1" = 10' VERTICAL

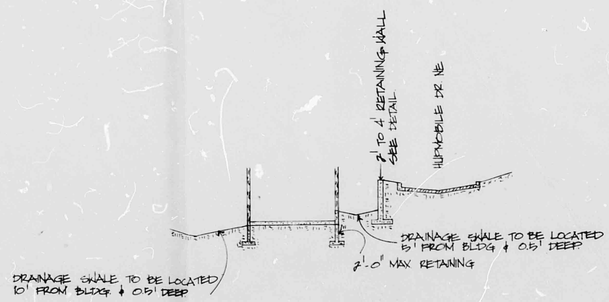

SECTION E-E

SCALE: 1" = 30' HORIZONTAL
1" = 10' VERTICAL

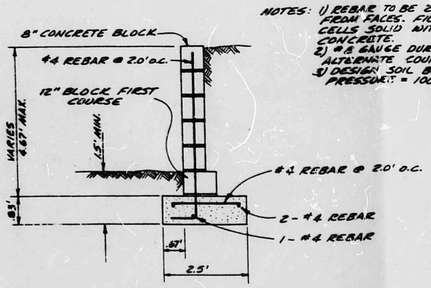

NOTES: 1) REBAR TO BE 2" CLEAR FROM FACES. FILL ALL CELLS SOLID WITH CONCRETE.
2) #8 GAUGE DURA WALL @ ALTERNATE COURSES.
3) DESIGN SOIL BEARING PRESSURE = 1000 PSF

2.0' TO 4.0' RETAINING WALL
SCALE 1" = 2'

DETAIL F

AS BUILT INFORMATION

CONTRACTOR	DATE
WORK STAKED BY	
INSPECTORS ACCEPTANCE BY	DATE
VERIFICATION BY	DATE
DRAWINGS CORRECTED BY	DATE

MICRO-FILM INFORMATION

RECORDED BY	DATE
NO.	

BENCH MARKS

SURVEY INFORMATION

FIELD NOTES

NO.	BY	DATE

ENGINEER'S SEAL

W. BLACKWELL JAMES REGISTERED PROFESSIONAL ENGINEER 7145 NEW MEXICO

9-8-84

NO.	DATE	REMARKS	BY

REVISIONS

DESIGNED BY DATE
DRAWN BY DATE
CHECKED BY DATE

CITY OF ALBUQUERQUE
MUNICIPAL DEVELOPMENT DEPARTMENT
ENGINEERING DIVISION

TITLE: **DETAIL SHEET**

FOR SUNRISE JOINT VENTURE

APPROVALS	ENGINEER	DATE	APPROVALS	ENGINEER	DATE
City Engineer			Liquid Waste		
A.C.E.-Design			Traffic		
A.C.E.-Hydrology			Water		

DRAWING NO.	MAP NO.	SHEET 3 OF 3

K23/D21