NEW MEXICO DEPARTMENT OF TRANSPORTATION, BERNALILLO COUNTY, CITY OF ALBUQUERQUE

SUNPORT BOULEVARD EXTENSION

BROADWAY TO I-25

DRAINAGE REPORT AMENDMENT

Prepared for:

BOHANNAN HUSTON
7500 Jefferson St. NE
Albuquerque, New Mexico 87109

Prepared by:

MOLZEN CORBIN
2701 Miles Road SE
Albuquerque, New Mexico 87106
Phone: (505) 242-5700 Fax: (505) 242-0673

FINAL

December 2020

MOLZENCORBIN
ENGINEERS | ARCHITECTS | PLANNERS

BHI161-11

ENGINEER OF RECORD

Molzen Corbin
2701 Miles Road, S.E.
Albuquerque, New Mexico 87106
(505) 242-5700

The technical material and data contained in this Master Plan was prepared under the supervision and direction of the undersigned, whose seal as a Professional Engineer, licensed to practice in the State of New Mexico, is affixed below.

(SEAL)

JONAH S. RUYBALID
NEW MEXICO
23909
PROFESSIONAL ENGINEER

12-17-2020

Jonah S. Ruybalid, P.E.

N.M.P.E. No. 23909

All questions about the meaning or intent of these documents shall be submitted only to the Engineer of Record, stated above, in writing.

TABLE OF CONTENTS

LIST OF TABLES

LIST OF FIGURES

APPENDICES

PRELIMINARY DRAINAGE REPORT

DRAINAGE REPORT AMENDMENT

APPENDICES (continued)

DRAINAGE REPORT AMENDMENT (continued)

EXECUTIVE SUMMARY

Bohannon Huston Inc. was contracted to complete the Sunport Boulevard Extension Project from Broadway to I-25. Molzen Corbin has been contracted by Bohannan Huston, Inc. as a sub-consultant to complete various portions of the Project including the drainage analysis and design.

URS Corporation, now known as "AECOM", prepared a Preliminary Drainage Report (PDR) in February 2011 for the Sunport Boulevard Extension Broadway to I-25 Project. This PDR was prepared for Bernalillo County Public Works Division under Bernalillo County Project No. TS 09-06 and New Mexico Department of Transportation (NMDOT) Control No. A300160. In addition to the PDR, AECOM prepared 30% plans for the roadway Project.

Molzen Corbin was instructed to utilize the 30% level plans and the City approved PDR for the basis of design of the Sunport Boulevard Extension Project. All PDR updates and/or revisions were to be documented in this Drainage Report Amendment.

All of the existing drainage basins were utilized. However, the addition of multiple drop inlets or updated design geometry caused the basins from the PDR to be split into multiple drainage basins. For example, Basin G became Basin G and Basin G1. The Arid Lands Hydrology Model (AHYMO) was updated and executed to produce updated hydrologic results. Autodesk Storm and Sanitary Analysis (SSA) and Hydraflow Extension were utilized to model the storm sewer system and perform the drop inlet analysis. The plans and structure sections have been revised to include the updated design geometry and structures, discharge rates, and hydraulic grade lines.

The PDR suggests the use of linear ditches adjacent to the roadway along Broadway Boulevard. As part of the updated design, the typical section was revised to include curb and gutter. These storm water flows were then routed to the proposed detention pond facility southeast of the Broadway/Sunport intersection.

OVERVIEW

This update is based on the PDR prepared by AECOM dated February 2011 and the Preliminary Design 30% Review Plans prepared by AECOM dated January 2011. This document identifies the assumptions, criteria and constraints proposed for the preparation of the update and a summary of the proposed changes from the City approved PDR.

The design criteria and methodology listed in the PDR are used for evaluating and developing the Amendment including:

- City of Albuquerque (COA) Development Process Manual (DPM) as the primary source of drainage criteria.
- AHYMO for hydrology. The PDR AHYMO results were utilized for the Update. This model includes a sediment bulking factor of 1.10.
- The 100-year 24-hour event as the design storm.
- NMDOT curb and gutter, median curb and gutter, and inlets east of Broadway Boulevard with COA curb and gutter, median curb and gutter, and inlets on Broadway and Woodward.
- Conformance with the South Broadway Sector Drainage Management Plan.

Revisions and exceptions to the design criteria and methodology used in the PDR include the following:

- Grade and Alignment - Grade, cross section, lane geometry, and alignment changes during the 30% update, 60% review, and 90% review will be incorporated into the final drainage computations. Significant changes in drainage design for Sunport Boulevard are not anticipated.

- Sunport and Broadway Boulevards Intersection Drainage. Major revisions to the drainage collection and the detention ponds are proposed:
    - Broadway Detention Pond Relocation - At the request of the County, the proposed pond at the southeast corner of Broadway Boulevard and Sunport Boulevard has been relocated further east. This will result in a deeper pond and larger conveyance to convey the runoff to the pond. The relocated pond detains approximately 3.15 acre-feet and will drain at a peak rate of 1.6 cfs to the existing SD manhole in the intersection of Broadway/Woodward and then to the San Jose Drain (SJD). The pond is approximately 8.3 feet deep at the west end and approximately 15 feet deep on the east end. Side slopes are 2:1 and lined with rip-rap from an elevation of 4,941.50 feet down to the bottom elevation of 4,933.20 feet. Stormwater quality treatment is provided by allocating infiltration/evapotranspiration retention volume in the pond.

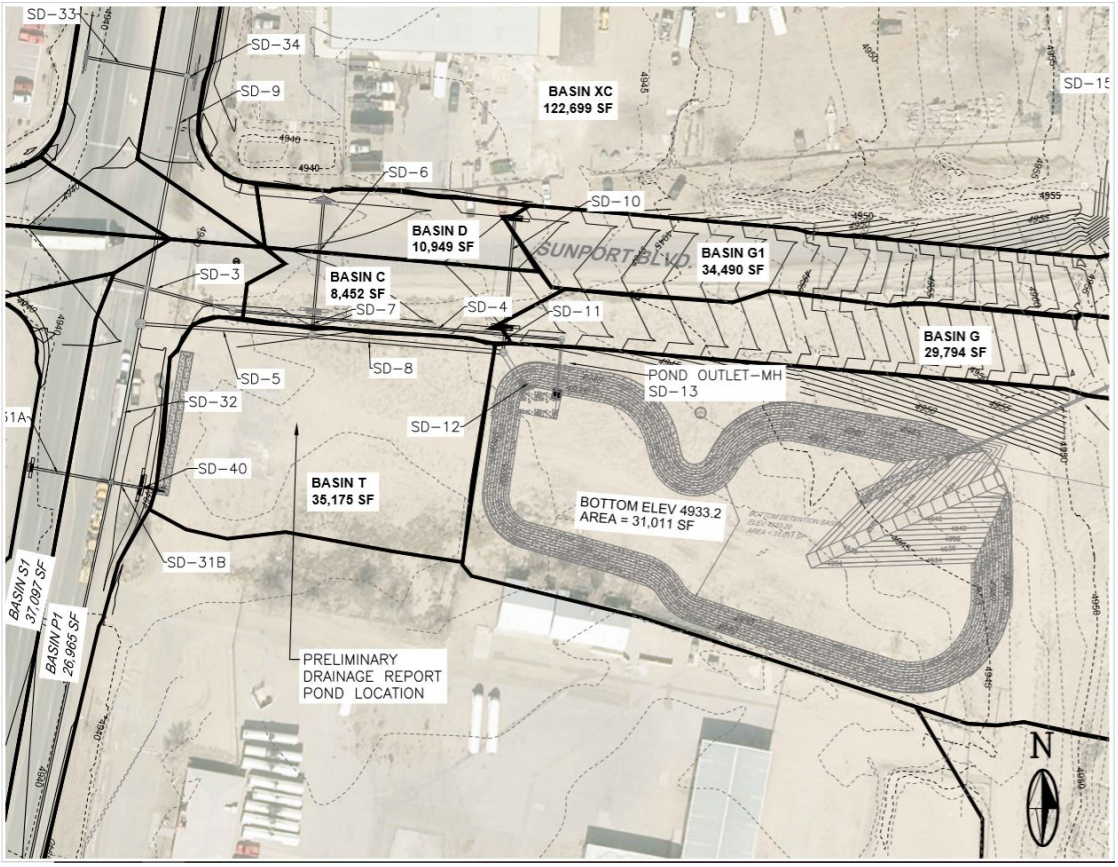

FIGURE OV-1
PRELIMINARY DRAINAGE REPORT POND LOCATION

- Broadway Boulevard Drainage System - The drainage philosophy implemented in the PDR was to pond portions of the runoff in “V” ditches along the west side of Broadway Boulevard for infiltration and evaporation. There was not adequate volume on the west side to contain the 100-year runoff. Along the east side of Broadway Boulevard, the runoff was conveyed via a combination of “V” ditches and storm drain into the detention pond at the southeast corner of the intersection. The roadway runoff west of the South Diversion Channel (SDC) was conveyed to the pond in a storm drain system.

  The proposed system collects runoff from Broadway Boulevard in the reconstruction area, as well as runoff from Sunport Boulevard west of the SDC. Stormwater is conveyed through curb and gutter with drop inlets to the detention pond southeast of the Broadway/Sunport Boulevard intersection.

- A V-ditch pond is located at one location immediately southeast of the Broadway/Sunport intersection adjacent to Broadway Boulevard. This pond detains offsite stormwater from the adjacent property from discharging onto Broadway Boulevard. The stormwater is instead conveyed through the pond and storm drain line to the storm drain system.

- The runoff collected in Broadway Boulevard drains via a 42-inch pipe to the detention pond. The runoff in excess of the water quality volume is discharged through a restricted outlet junction box to the existing manhole in the intersection of Broadway and Woodward and then to the SJD. The storm drain system is constrained by the roadway elevations and the existing manhole invert elevation in the intersection. The resulting pipe slope is 0.1%. This is not adequate to provide self-cleaning velocities and median inlets that do not have a curb opening are used to minimize debris in the system. Due to the shallow system, ductile iron pipe is proposed in select locations. Drop inlets located in sag areas are designed for double the design storm event to account for 50% clogging.

- Stormwater Quality Volume - The Preliminary Design incorporated a stormwater quality volume of runoff from a 0.25 inch storm at the entrance to the SDC. Stormwater quality was not explicitly addressed for the runoff west of the SDC.

- SDC Water Quality Pond (WQP) - This revision impacts the water quality pond at the discharge into the Albuquerque Metropolitan Arroyo Flood Control (AMAFCA) SDC. The detention pond includes a 2 foot +/- thick gravel and rock filter with an underdrain system to provide treatment. The undeveloped areas upstream of the WQP will either discharge directly to the SDC as they do now, or will discharge into a proposed storm drain line which routes flow around the WQP to discharge onto the rundown downstream of the WQP, which discharges into the SDC.
    - The water quality pond will be modified to capture the runoff only from the roadway east of the SDC, but will allow the runoff from the undeveloped area to discharge directly to the SDC. The water quality volume will be modified to satisfy the 90th percentile storm criteria. The gravel-rock filter with subdrain treatment method is proposed. The pond incorporates reverse slope outfall pipes sized for the 10-year storm and a 100-year spillway to discharge flow into the SDC via the existing baffle chute rundown.

- Broadway/Sunport Pond Water Quality - The Broadway Pond collects runoff from Sunport Boulevard west of the SDC, the Broadway Boulevard corridor within the Project limits, and Woodward Road (east). Most of this runoff is from paved areas. The water quality volume is approximately 0.69 acre-feet. The proposed treatment method is to dedicate the first level in the pond, approximately 1 foot, as a retention infiltration/evapotranspiration zone. This zone is stored below the invert of the discharge pipe and does not discharge to the SJD.
    - The COA DPM requires that appropriate techniques such as infiltration, extended filtration, water harvesting, evapotranspiration and other appropriate techniques be utilized for the StormWater Quality Volume. For drainage areas smaller than 40 acres, the runoff volume can be determined by multiplying the drainage area by a value of 1,037 cubic feet/ac for sites with 80% impervious are or 1,670 cubic feet/ac for sites with 100% impervious area. These values are consistent with a runoff depth of

0.36 and 0.46 inches respectively. Stormwater control measures should manage first flush runoff and runoff from impervious surfaces.

- Woodward Road (west) Water Quality - The small drainage area on Woodward Road west of Broadway Boulevard is connected directly to the existing 30-inch pipe draining to the SJD as proposed in the PDR. A practical method to treat this runoff was not identified; therefore, the water quality volume is not treated in this portion of the system. Basins A and B contribute a runoff volume of 0.232 ac-ft. Basin XV for the existing Rio Grande Service Center located northwest of the Broadway/Woodward intersection has an existing connection to the existing 30-inch storm drain line which will be re-connected to the new manhole during construction.

- XE Channel - Edmunds Street to SDC. The channel from the 36-inch culvert on Edmunds Street to the SDC in the PDR is revised to account for different basin delineation assumptions impacting the flow rate.

  There is a 36-inch culvert under I-25 draining from east to west that flows to the Edmunds Street 36-inch culvert. The PDR assumed this discharge, as well as the local area (Basin XD1) drains northward to Woodward Avenue. Based on field observation, the I-25 culvert and the local area both drain to the Edmunds Street culvert in a 3-foot to 6-foot deep incised ditch. The I-25 36-inch culvert discharge is defined in the Molzen Corbin 1996 Sunport Boulevard Final Drainage Report as 33.7 cfs. Also, the portion of the local drainage area between I-25 and Edmunds Street appears to split with approximately 2/3 flowing to the Edmunds Street 36-inch culvert. Based on this analysis, the total flow at the Edmunds Street 36-inch culvert is estimated to be 46.3 cfs.

  The XE Channel conveys this flow, as well as the drainage from local basin XE1, to the existing rundown into the SDC. Currently, this natural arroyo flow meanders under the Sunport Boulevard footprint. As part of the Project, the arroyo is channelized to protect the roadway wall and the stormwater quality pond. The PDR identified the channel design flow as 14 cfs. Based on the revised hydrology, a flow rate of 50.4 cfs is required.

Note that the Sunport Boulevard runoff is conveyed through the stormwater quality pond to the SDC rundown and does not enter the XE Channel.

It was determined that the best way to manage this stormwater discharge is through a closed 36-inch storm drain line. The storm drain line will be routed around the north side of the stormwater quality pond and discharge onto the apron of the rundown into the SDC.

- Utility Conflicts - Based on available data and preliminary analysis, storm drain conflicts with existing gravity systems can be avoided. However, conflicts with pressurized systems such as water and gas lines may require adjustment.

1.0 INTRODUCTION

Drainage plans for the 90% design 10 sheets are included in Appendix A instead of the 30% plans prepared by AECOM.

2.0 DESIGN CRITERIA AND METHODOLOGY

Hydraflow Extension was used to perform the drop inlet calculations. SSA was used to analyze the storm sewer system to determine Hydraulic Grade Line elevations. Both the Hydraflow Extension and SSA calculations are further described within Appendix D

3.0 EXISTING SITE CONDITIONS

No updates.

4.0 EXISTING DRAINAGE CONDITIONS

The following information provides a summary of the drainage plans for existing developments adjacent to the Project limits based on the drainage plans available online from the COA Geographic Information System (GIS) Map Viewer. Figure 4-1 shows a screen shot of the GIS Map Viewer of the project area.

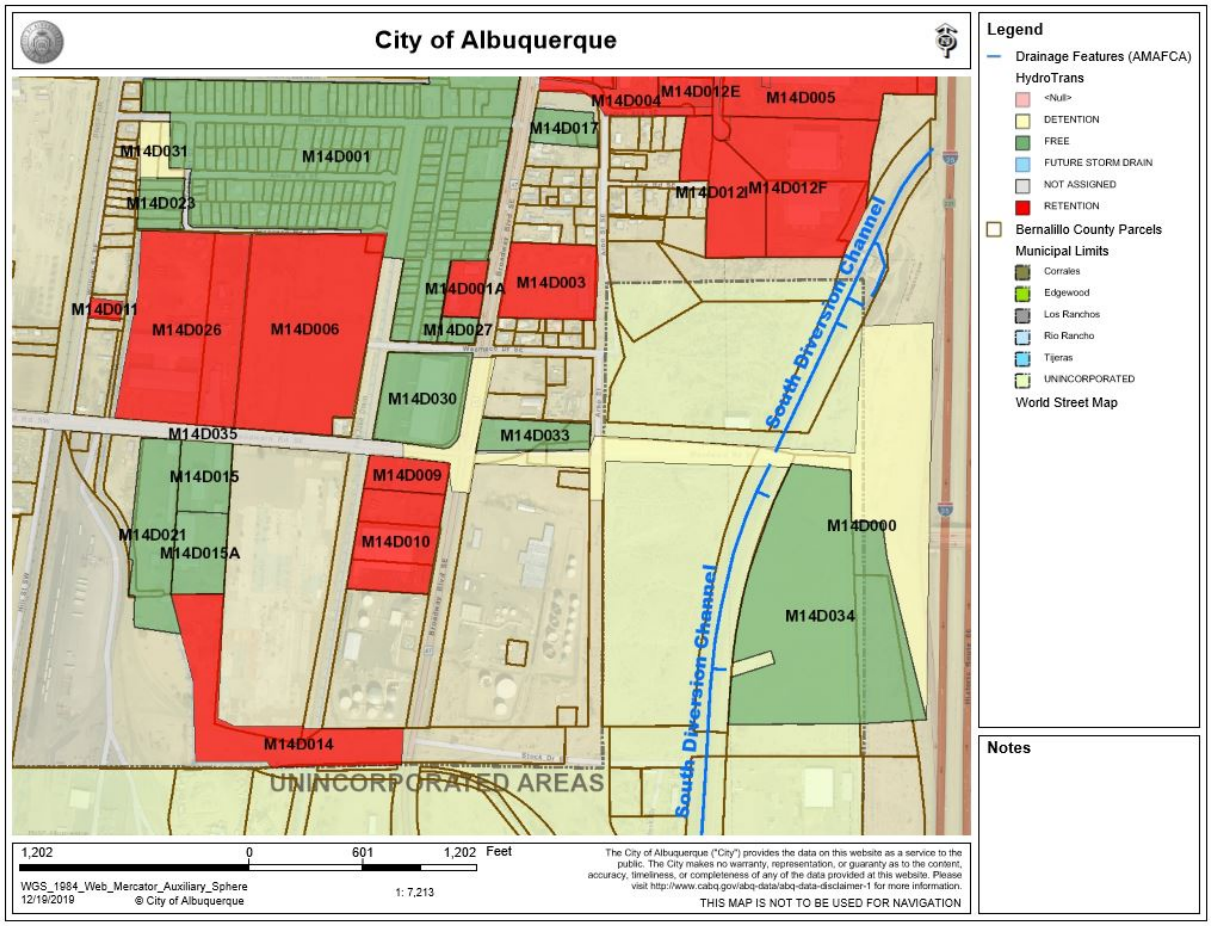

FIGURE 4-1
GIS MAP VIEWER – CAPTURED SCREENSHOT OF PROJECT AREA

Southwest of Broadway/Woodward Intersection:

- The parcel immediately southwest of the Broadway/Woodward intersection and as part of M14D009 does not contribute to the Project. Existing runoff is retained in a retention pond immediately south of Woodward or drains to the SJD.

- The three parcels as part of the Ben E. Keith Foods Project and as part of M14D010 on the southwest side of the Broadway/Woodward intersection were designed to retain their runoff with a retention pond just west of Broadway Boulevard.

- Northwest of Broadway/Woodward Intersection.

- The site as part of the Cauwels Warehouse Project and associated with M14D030 was allowed discharge into City drainage facilities. The Site, as noted by the plans, is designed to drain into the SJD. The Site is divided into two basins. The west basin drains into the SJD while the east basin drains through a water quality inlet before connecting to an existing inlet at the intersection of Broadway and Woodward. The east basin has a 100-year volume of 13,380 cubic feet and a 100-year peak discharge of 12.6 cfs which discharges through a 10-inch DI which connects to an existing manhole at Broadway/Woodward and then conveys the stormwater though a 30-inch RCP line to the SJD.

The existing 10-inch storm drain line will be re-connected as part of this Project to the existing 30-inch storm drain line which drains to the SJD.

<u>Northwest of Broadway/Wesmeco Drive</u>:

- The parcel immediately northwest of the Broadway/Wesmeco Drive intersection is part of the Cesar Sierra Metal Building Project and associated with M14D027, did not have plans available for review.

- The parcel located northwest of Broadway/Wesmeco Drive as part of the Private Garage for A&E Auto Sales and associated with M14D0001A. The Drainage Plan shows a retention pond on the northwest side of the property.

<u>Northeast of Broadway/Wesmeco Drive</u>:

- The parcel northeast of the Broadway/Wesmeco intersection known as the Ahern Rentals property associated with M14D0003, has a drainage plan on file. The drainage plan states that the site drains from east to west. There is a 30-inch storm drain that terminates

at the intersection of Broadway and Wesmeco. The storm drain runs west within Wesmeco and drains into the SJD. Half of the property (Basins 10 and 11) drain into the existing storm drain in Wesmeco. Part of the property (Basins 21 and offsite) drains to a pond along the south side of the property. Basin 20 (3.3 cfs and 5,069 cubic feet as part of the 100-year 6-hour event) drains into an existing drop inlet that connects to the existing storm drain system within Broadway/Wesmeco. The Drainage Plan states that the site is allowed a discharge rate of 2 cfs/acre which is equivalent to 9.88 cfs from the site.

Northeast of Broadway/Woodward Intersection:

- The parcel associated with Aguamatic Landscaping and M14D033 is located immediately northeast of the existing Broadway/Woodward intersection. The Drainage Plan shows two detention ponds on the southside of the property with volumes of 814 and 1,389 cubic feet respectively. These facilities discharge through a culvert pipe which connects to a drop inlet on the northeast side of the Woodward/Broadway intersection. That drop inlet connects to the Woodward 30-inch storm drain.

The existing storm drain line will be connected to the storm drain installed as part of this Project which drains to the proposed detention pond.

5.0 PROPOSED DRAINAGE CONDITIONS

The Drainage Basins have been updated based on the updated design. Where additional Drainage Basins were added, the Drainage Basin at that location from the PDR was split into multiple basins. For example, Basin G from the PDR was split into two Basins which are named Basin G and Basin G1 in this Drainage Report Amendment. Existing sites with previously approved discharges to the Woodward storm drain were incorporated into the drainage analysis.

The AHYMO model was revised to include the updated Drainage Basin areas and routing. The AHYMO model was updated to utilize National Oceanic and Atmospheric Administration (NOAA) Atlas 14 precipitation values rather than the NOAA Atlas 2 precipitation values. Table 5-1 has been revised to show the updated results and have been arranged in alphabetical order, but with existing basins shown first. Table 5-2 has been revised to show analysis points as a result of the updated hydrology. The analysis points for the updated hydrology were considered to be specific junctions within the drainage system such as inlets and outlets of the ponds. Figure 5-1 has been revised to show the revised Drainage Basins.

It should be noted that any areas included in this drainage analysis that are not developed, should be restricted to pre-development discharges in the future. The current runoff volumes and peak discharges will need to be maintained.

TABLE 5-1
PROPOSED HYDROLOGY

Basin (hydrograph identification)	Area (sq mi)	Peak Discharge (cfs)	Runoff Volume (ac-ft)
A	0.00089	2.68	0.12
B	0.00082	2.49	0.112
C	0.00038	1.15	0.052
D	0.00032	0.97	0.044
G	0.00107	3.25	0.147
G1	0.00124	3.76	0.17
H	0.00066	2.02	0.091
H1	0.00025	0.78	0.035
H2	0.00054	1.65	0.074
H3	0.00028	0.87	0.039
H4	0.00122	3.71	0.168
I	0.00064	1.95	0.088
I1	0.00062	1.89	0.085
I2	0.00025	0.76	0.034
I3	0.00131	3.98	0.18
I4	0.00059	1.8	0.081
M1	0.00186	4.74	0.184
M2	0.00061	1.85	0.083
M3	0.00033	1.02	0.046
M4	0.00035	1.07	0.048
N	0.00368	7.23	0.207
P	0.00047	1.43	0.064
P1	0.00097	2.86	0.125
Q	0.00079	2.37	0.104
Q1	0.00019	0.58	0.025
R	0.00058	1.73	0.076
R1	0.0003	0.91	0.039
S	0.00044	1.36	0.061
S1	0.00058	1.72	0.075
T	0.00126	3.83	0.173
XC	0.0044	10.16	0.336
XD1	0.00156	3.19	0.103
XD2	0.00165	3.4	0.114
XD3	0.00174	3.51	0.109
XD4	0.00021	0.52	0.018
XD5	0.00233	4.36	0.125
XE1	0.00005	0.12	0.004
XE2	0.00003	0.07	0.002
XE3	0.00369	4.73	0.143
XF	0.00379	6.5	0.209
XJ	0.00755	12.48	0.364
XJ1	0.01045	18.34	0.528
XM1	0.00057	1.47	0.055
XM2	0.00105	2.46	0.082
XV	0.00305	8.99	0.396

TABLE 5-2
ANALYSIS POINTS

Analysis Point #	Basin	Contributing Basins	Area (sq mi)	100-Year 24-Hour Peak Discharge (cfs)	100-Year 24-Hour Runoff Volume (ac-ft)
1	SDC (Discharge to the SDC from overland flow).	XE3, XD5	0.00756	9.09	0.268
2	SDC (Discharge to SDC from Storm Drain line).	*culvert, XD3, XD4, XE2, XF	0.00577	*10.6	*0.336
3	SDC (Discharge from WQP).	I4, I3, H3, H3	0.00345	10.48	0.471
4	Water Quality Pond (Discharge to the WQP from storm drain).	I4, I3, H3, H4	0.00345	7.74	0.467
5	Water Quality Pond (Total Discharge to the pond).	I4, I3, H3, H4, XE2, XF, XE1	0.0114	17.91	0.5649
6	Water Quality Pond (Discharge out of the pond).	I4, I3, H3, H4, XE2, XF, XE2	0.0114	16.729	0.5649
7	Detention Pond (Total Discharge to detention pond).	XJ1, XJ, G1, G, D, C, Q, R, Q1, R1, T, S1, P1, S, P, XC, M1, XM1, M2, N, XM2, XD2, M3, XD1	0.0456	102.37	3.712
8	Detention Pond (Discharge to the detention pond from the storm drain on the east side).	M1, XM1, M2, N, XM2, XD2, M3, XD1	0.01463	35.47	1.33
9	Detention Pond (Discharge to the detention pond from the storm drain on the west side).	G1, G, D, C, Q, R, Q1, R1, T, S1, P1, S, P	0.013	25.92	1.1553
10	Detention Pond (Discharge out of the detention pond).	XJ1, XJ, G1, G, D, C, Q, R, Q1, R1, T, S1, P1, S, P, XC, M1, XM1, M2, N, XM2, XD2, M3, XD1	0.04563	1.45	3.068
11	Discharge to San Jose Drain.	A, B, XV, DetPond Out	0.05039	16.14	3.695
*values do not include the 52 cfs for the culvert discharging into basin XD3 captured by storm drain line, routed to SDC					

5.1 Proposed Drainage Basins

5.1.1 Basins XL, XD1, XF, and XK

Basin XL was not included in this analysis as it does not discharge into the Project drainage system. Basin XK was absorbed by Basin XF with the updated basin map.

Basin XF flows overland to Basin XE2 where it makes its way into the storm drain line around the WQP.

5.1.2 Basins XF, XE1, XE2, H, and I

Basin XF was increased in area to the south to eliminate Basin XK as it did not appear that Basin XK was needed. Basin XE1 area was revised, but includes the WQP. As part of construction of the WQP, a berm will be constructed on the north side of the pond. Basin XE3 remains very similar to what was shown in the PDR for Basin XE2.

Basins H and I were divided in to multiple basins including basins H, H1, H2, H3, H4 and I, I1, I2, I3, I4. The division was a result of updated design geometry that includes a bike lane separated from travel lanes by a wall, and the placement of drop inlets.

5.1.3 Basin XM1, M1, M2, and N

The area for Basin XM1 was divided into Basins XM1 and XM2, but still includes offsite flows from the structure and property adjacent to Woodward Road. Basins M3 and M4 were added due to updated design geometry. Basin N remains virtually identical to the PDR.

5.1.4 Basins C, D, and T

Basins C and D areas are smaller due to the increase in size of Basin G and G1 along with updated design geometry. Basin T varies in size slightly due to the relocation of the detention pond to the east.

5.1.5 Basins Q, R, S, and P

Basins Q, R, S, and P have been divided into two basins each based on the updated design geometry and the location of drop inlets.

5.1.6 Basins A and B (Woodward Road west of Broadway)

Basins A and B remain virtually identical.

LAST MODIFIED: Dec 23, 2019 - 9:05am BY USER: JRoybald
DWG. LOCATION: I:\BH\BH161-11\BASIC SERVICES\DWGS\Microstation\Proposed\Drainage\
DWG. NAME: BH161-11_BasinMap.dwg

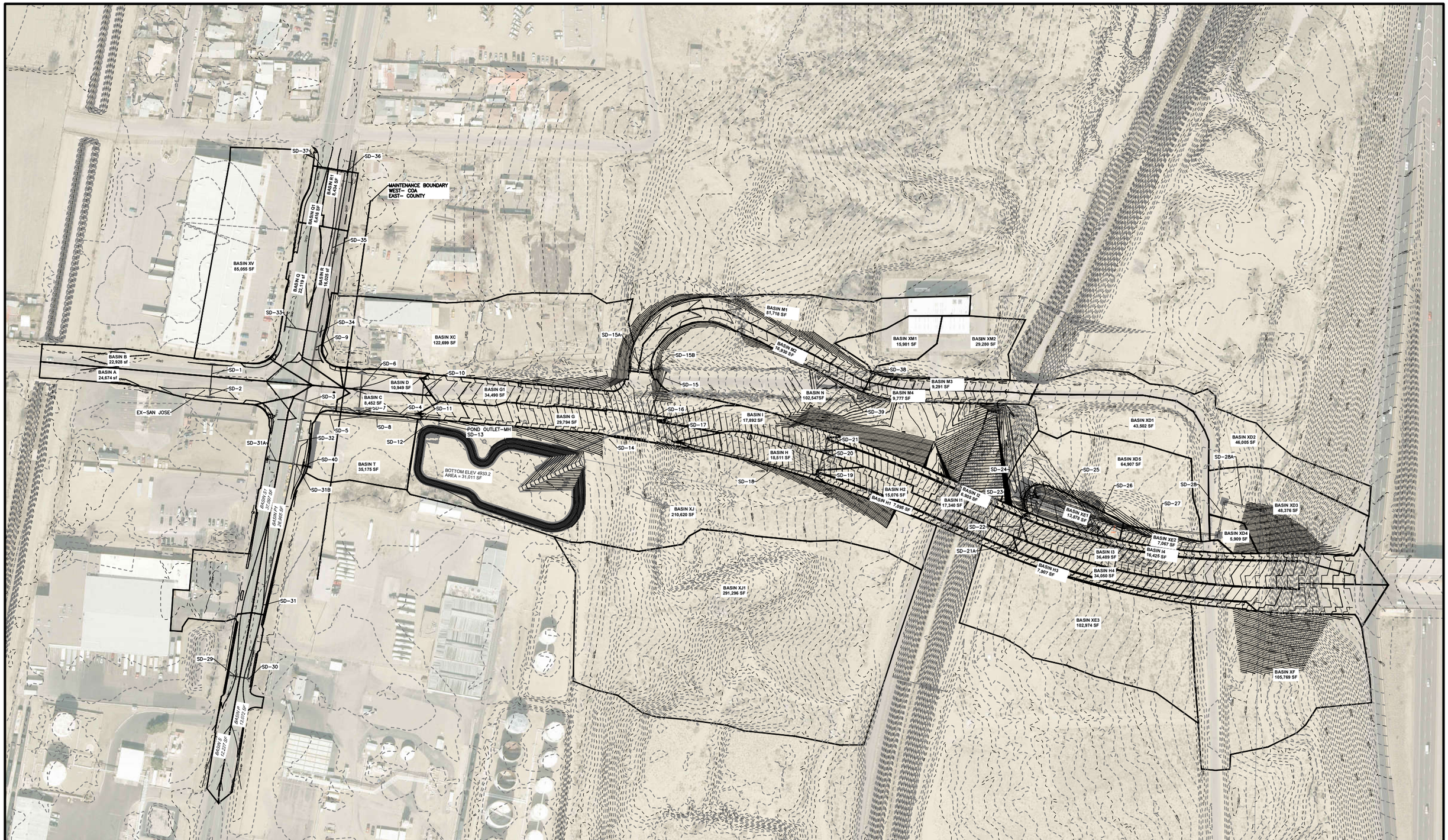

MOLZENCORBIN

0 50' 100' 200' 400'
1"=200'

N

SEE APPENDIX D FOR 24"X36" VERSION OF THIS BASIN MAP

Sunport Boulevard Extension Broadway to I-25

Figure 5-1 Proposed Drainage Basin Map
Drainage Report Amendment

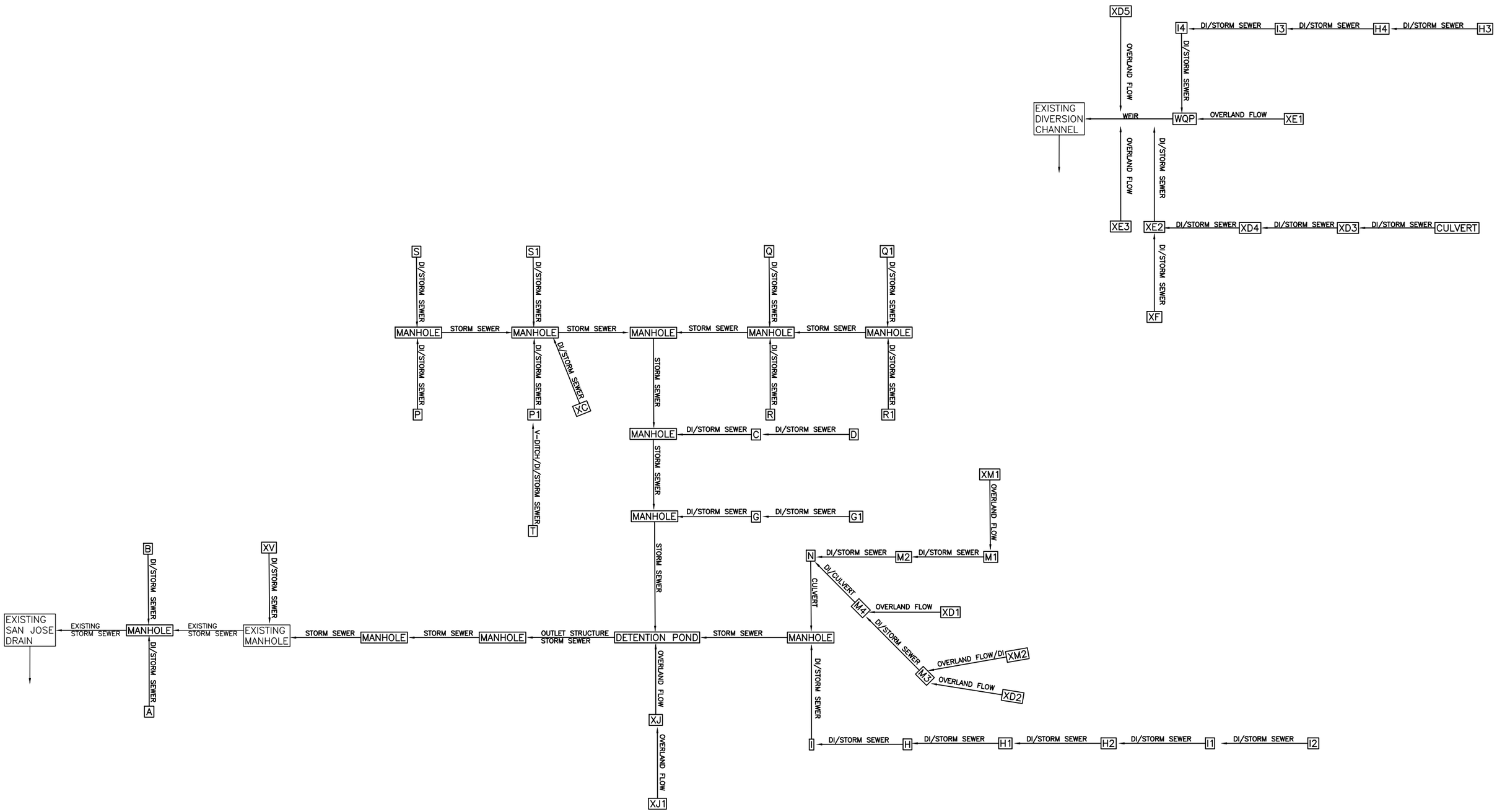

Sunport Boulevard Extension Broadway to I-25

MOLZENCORBIN

Figure 5-2 Proposed Drainage Basin Routing

Drainage Report Amendment

LAST MODIFIED: Dec 20, 2019 - 1:45pm BY USER: JRotwhild
DWG: LOCATION: I:\BHI\BHI161-1\(BASIC SERVICES)\DWGS\Microstation\Proposed\Drainage\
DWG. NAME: Figure_Routing.dwg

6.0 CONCLUSION

- The SJD is extremely restricted in the rate of flow it can accept. The PDR suggests the use of a standpipe outlet. The updated design files limit the flow through a slightly different outlet structure.

- The PDR recommends stormwater retention within the Right-of-Way (ROW) within linear ditches. The updated design files provide an urban typical section for Broadway Boulevard with curb and gutter, and drop inlets. The drop inlets route the stormwater runoff to the detention pond southeast of the Broadway/Sunport intersection. There is one location where a linear pond is utilized within Basin T to prevent offsite stormwater from discharging onto Broadway Boulevard.

- The PDR suggests that the existing pond and driveway on the northeast quadrant of the Broadway/Sunport intersection must be relocated. The existing pond will not be relocated and will be allowed to drain into the storm drain system.

- The PDR suggests that a water quality pond be planned to collect flow from the proposed roadway basins and the existing adjacent arroyo and outflow into the SDC. A culvert system was designed to intercept stormwater flows from the existing arroyo and direct those flows around the WQP and into the diversion channel through the energy dissipation structure. The WQP receives roadway runoff prior to discharge over a weir into the SDC energy dissipation structure.

REFERENCES

AECOM (Formerly known as URS Corporation). *Sunport Boulevard Extension Broadway to I-25 PDR*. CNA300160, TS09-06,February 2011

APPENDIX A

100% DRAINAGE PLANS

DRAINAGE KEY NOTES

(1) GRADE AROUND EXISTING CATCH BASIN. MAINTAIN EXISTING 18" INLET & OUTLET.

(1A) MAINTAIN CONNECTIONS TO NEW P-20. (SEE NOTE TO CONTRACTOR, THIS SHEET.) NOTE: RECENT FIELD OBSERVATIONS OBSERVED THAT THE DIAMETER OF THESE STORM DRAIN PIPES WERE 18" IN DIAMETER, NOT THE 15" DIAMETER THAT WAS PRESENTED WITH THE ORIGINAL PROJECT SURVEY AND SUBSEQUENT "SUE" INVESTIGATIONS. CONTRACTOR TO VERIFY IN FIELD PRIOR TO INSTALLATION OF P-20.

(2) INLET OF EXISTING 18" CONCRETE PIPE WAS NOT LOCATED IN FIELD AS PART OF SURVEY DATA COLLECTION, AND THEREFORE ASSUMED TO BE ABANDONED. CONTRACTOR TO CONFIRM IF THE EXISTING INLET IS ACTIVE, AND COORDINATE WITH PROJECT MANAGER IF ACTIVE. MAINTAIN CONNECTION IF ACTIVE.

IF NOT ACTIVE, THE CONTRACTOR SHALL CUT THE DRAINAGE LINE OUTSIDE THE LIMIT OF THE NEW P-20 STRUCTURE, AND PLUG WITH STRUCTURAL CONCRETE CLASS A. THIS WORK IS INCIDENTAL TO ITEM 601000.

DRAINAGE STRUCTURE BUILD NOTES

P-1
COA SDI DOUBLE TYPE D
STA 4998+23.60, LT 25.47' (LOG)
LIP OF GUTTER 4939.29
FLOWLINE ELEV 4939.27 = GRATE
TOC 4939.83
18" OUT 4935.71

P-2
COA DRAIN MANHOLE
TYPE C - 6' DIA.
STA 998+20.67, RT 29.39'
RIM/COVER ELEV 4938.95
18" IN (N) 4935.30
18" IN (S) 4935.04
36" EXIST IN (E)/
OUT (W) 4933.5+/-

P-3
COA SDI DOUBLE TYPE D
STA 998+20.67, RT 43.95' (LOG)
LIP OF GUTTER 4938.66
FLOWLINE ELEV 4938.64 = GRATE
TOC 4939.20
18" OUT 4935.10

P-25A
SEE SHEET 10-6

P-4
NMDOT SDI TYPE II - B
STA 1001+55.00, LT 35.00' (LOG)
LIP OF GUTTER 4940. 42
FLOWLINE 4940.30
GRATE 4940.07
TOC 4940.96
24" OUT 4936.30

P-5
NMDOT SDI TYPE II - B
STA 1001+55.00, RT 41.0' (LOG)
LIP OF GUTTER 4940.30
FLOWLINE ELEV 4940.18
GRATE 4939.95
TOC 4940.84
24" IN (N) 4935.93
24" OUT (S) 4935.88

P-14
COA DRAIN MANHOLE
TYPE C - 8' DIA.
STA 4999+40.00, RT 32.62'
RIM/COVER ELEV 4940.15
36" IN (S) 4934.91
36" IN (N) 4934.93
42" OUT (E) 4934.86

P-15
COA DRAIN MANHOLE
TYPE C - 8' DIA.
STA 1001+55.0, RT 60.63'
RIM/COVER ELEV 4941.20
42" IN (W) 4934.74
24" IN (N) 4935.81
42" OUT (E) 4934.69

P-19
COA DRAIN MANHOLE
TYPE C - 4' DIA.
STA 1000+96.16, RT 47.51'
RIM/COVER ELEV 4941.18
18" IN (E) 4933.95
18" OUT (W) 4933.90

P-19A
COA DRAIN MANHOLE
TYPE C - 8' DIA.
STA 1000+34.13, RT 36.74'
RIM/COVER ELEV 4940.29
18" IN (E) 4933.84
18" OUT (W) 4933.83
(SEE DETAILS, SHEET 10-22)

P-19B
STA 1000+56.3, LT 0.5'
REMOVE AND DISPOSE OF
EXISTING CATCH BASIN.
BUILD COA DRAIN MANHOLE
TYPE C - 4' DIA.
RIM/COVER ELEV 4940.60
12" IN (NE) 4936.8+/-
12" OUT (SW) 4936.8+/-
CONTRACTOR TO CONFIRM
INLET/OUTLET PIPE IN FIELD.
(EXISTING 6" CI WATER LINE
IS NOT TO BE DISTRUBED)

P-20
REMOVE AND DISPOSE OF EXIST DMH
BUILD COA DRAIN MANHOLE
TYPE C - 6' DIA.
STA 1000+04.86, RT 31.67'
RIM/COVER ELEV 4940.17
18" IN (E) 4933.8+/-
30" (EXIST) OUT (W) 4933.8+/-
SEE NOTE TO CONTRACTOR, THIS SHEET,
FOR EXISTING INLET ELEVATIONS.

NOTE: (TYPICAL ALL 10 SHEETS)

1. "LOG" = "LIP OF GUTTER"
2. ALL DRAINAGE INLETS WITHIN "UNIT 2" COA MAINTENANCE TO HAVE GRATE(S) ONLY, WITH NO CURB OPENINGS. ALL DRAINAGE ITEMS (STORM DRAIN CULVERTS, INLETS AND MANHOLES, ETC.,) TO BE UNDER CITY OF ALBUQUERQUE SPECIFICATIONS, PAY ITEMS, AND STANDARD DRAWINGS, UNLESS OTHERWISE NOTED. SEE COA STD DWG 2220-MODIFIED (SHEET 10-23).
3. ALL GRATE ELEVATIONS TO BE CONFIRMED IN FIELD AND APPROVED BY THE PROJECT MANAGER PRIOR TO INSTALLATION.
4. ALL STORM DRAIN MANHOLE COVERS WITHIN UNIT 2 SHALL BE NEENAH FOUNDRY MODEL R-6460-B MANHOLE COVER (PRESSURE TYPE), OR ENGINEER APPROVED EQUILAVENT.
5. SEE SHEET 10-22 FOR COA TYPE "D" INLET CURB AND GUTTER TRANSITIONS.
6. "TOC" = TOP OF CURB ELEVATION.
7. ALL DRAIN INLET GRATES WITHIN UNIT 1 PAVED ROADWAY AND ADJACENT TO BICYCLE LANES SHALL BE "URBAN" TYPE AND SUITABLE FOR BICYCLE TRAFFIC. NMDOT STD DWG 623-01-1/1.
8. IN AREAS WHERE COVER BETWEEN FINISHED PAVEMENT GRADE AND TOP OF STORM DRAIN CULVERT PIPE IS 1'-6" OR LESS, CONTRACTOR SHALL REFER TO THE MINIMUAL COVER STORM DRAIN DETAIL, SHEET 10-18. THIS WORK IS INCIDENTAL TO THE APPLICABLE STORM DRAIN PIPE ITEM NUMBER.

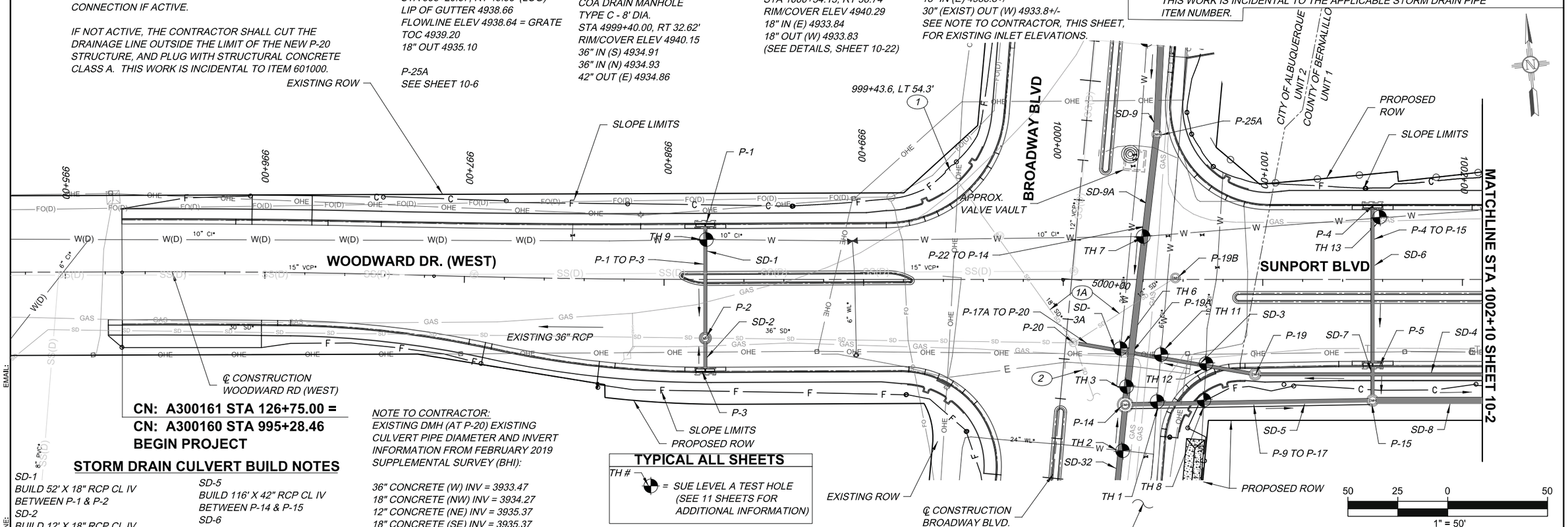

CN: A300161 STA 126+75.00 =
CN: A300160 STA 995+28.46
BEGIN PROJECT

STORM DRAIN CULVERT BUILD NOTES

SD-1
BUILD 52' X 18" RCP CL IV
BETWEEN P-1 & P-2
SD-2
BUILD 12' X 18" RCP CL IV
BETWEEN P-2 & P-3
SD-3A
BUILD 23' X 18" DUCTILE IRON PIPE
BETWEEN P-20 & P-19A
SD-3
BUILD 58.5' X 18" DUCTILE IRON PIPE
BETWEEN P-19A & P-19 (NMDOT)
SD-4
BUILD 235' X 18" DUCTILE IRON PIPE
BETWEEN P-19 & P-18 (NMDOT)
SD-5
BUILD 116' X 42" RCP CL IV
BETWEEN P-14 & P-15
SD-6
BUILD 75' X 24" STORM DRAIN
CULV PIPE, BETWEEN P-4 & P-5
SD-7
BUILD 13' X 24" STORM DRAIN
CULV PIPE BETWEEN P-5 & P-15
SD-8
BUILD 131' X 42" RCP CL IV
BETEEN P-15 & P-16
SD-9
SEE SHEET 10-6
SD-9A
SEE SHEET 10-6
SD-32
SEE SHEET 10-6

NOTE TO CONTRACTOR:
EXISTING DMH (AT P-20) EXISTING CULVERT PIPE DIAMETER AND INVERT INFORMATION FROM FEBRUARY 2019 SUPPLEMENTAL SURVEY (BHI):

36" CONCRETE (W) INV = 3933.47
18" CONCRETE (NW) INV = 3934.27
12" CONCRETE (NE) INV = 3935.37
18" CONCRETE (SE) INV = 3935.37

CONTRACTOR TO CONFIRM IN FIELD AND COORDINATE WITH PROJECT MANAGER AND ENGINEER.

TYPICAL ALL SHEETS

TH # = SUE LEVEL A TEST HOLE (SEE 11 SHEETS FOR ADDITIONAL INFORMATION)

DRAINAGE PROFILE SHEET REFERENCES

SYSTEM	SHEET
P-1 TO P-3	10-8
P-4 TO P-15	10-8
P-9 TO P-17	10-10
P-17A TO P-20	10-11
P-22 TO P-14	10-11
P-24 TO P-26	10-9

KEVIN W. EADES
NEW MEXICO
14481
REGISTERED PROFESSIONAL ENGINEER
9/14/2020

SEE SHEETS 10-5 & 10-6 FOR BROADWAY BLVD DRAINAGE (NORTH & SOUTH OF INTERSECTION)

DESIGN REVIEW COMMITTEE	CITY ENGINEER APPROVAL

NO.	DESCRIPTION	DATE	BY
4			
3			
2			
1			

REVISIONS (OR CHANGE NOTICES)

BERNALILLO COUNTY
PUBLIC WORKS DIVISION
TECHNICAL SERVICES DEPARTMENT

SUNPORT BOULEVARD EXTENSION DRAINAGE PLAN WOODWARD RD. / SUNPORT BLVD.

EMAIL:
PHONE:
DESIGNED BY:

PROJECT CONTROL NUMBER CN: A300160

DRAINAGE KEY NOTES
(SEE SHEET 10-2A)

DRAINAGE STRUCTURE BUILD NOTES
(P-#: SEE SHEET 10-2A)

STORM DRAIN CULVERT BUILD NOTES
(SD-#: SEE SHEET 10-2A)

DRAINAGE PROFILE SHEET REFERENCES

SYSTEM	SHEET
P-9 TO P-17	10-10
P-17A TO P-20	10-11
P-6 TO P-16	10-9
P-30 TO P-46	10-12 & 10-13
P-45 TO P-33	10-9
P-45A TO P-45C	10-15
P-33C TO P-33B	10-15

WV-12 STA 1007+57.2, LT 17.34'

MH-05 STA 1007+63.5, RT 60.46'

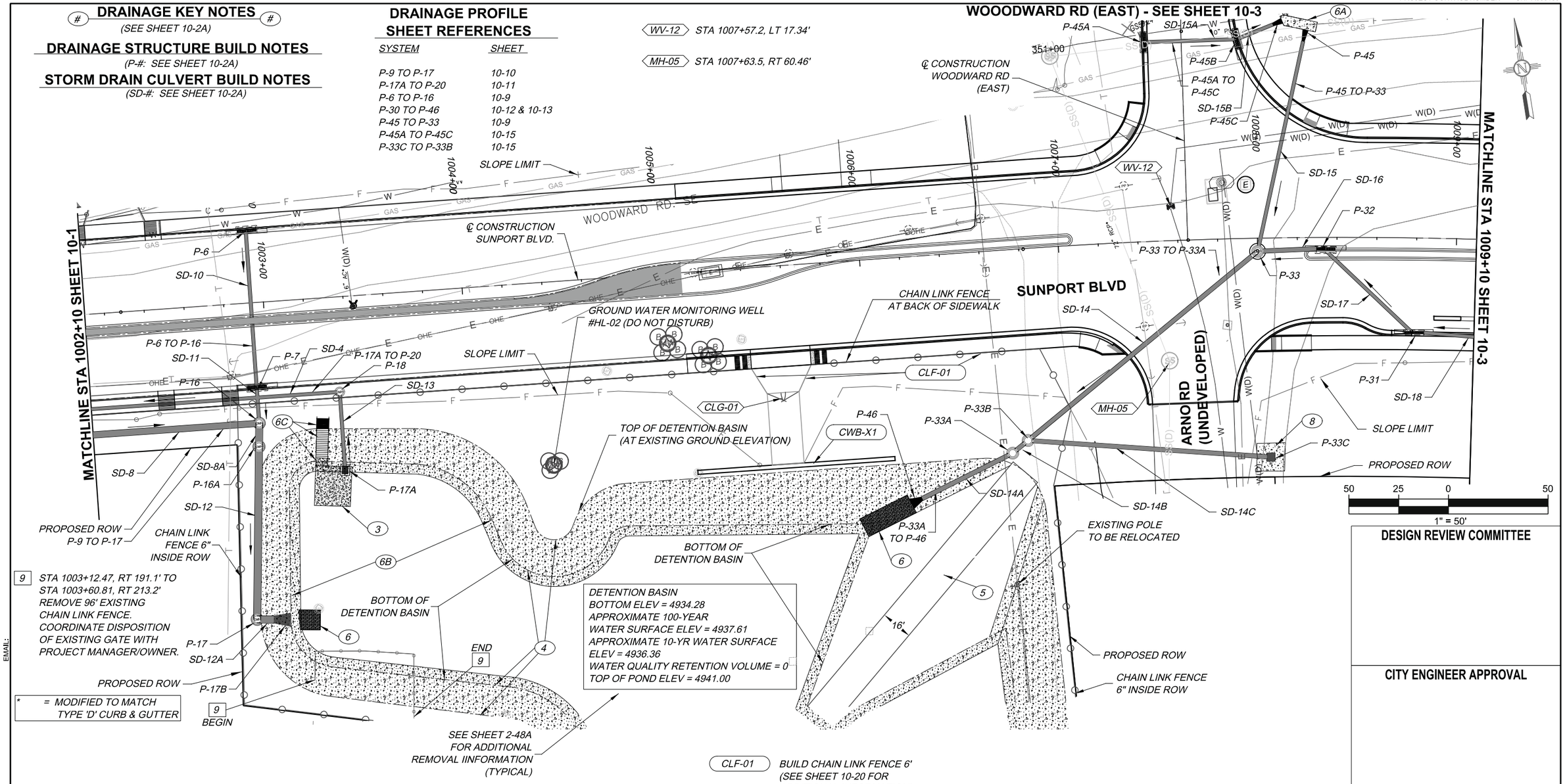

9 STA 1003+12.47, RT 191.1' TO STA 1003+60.81, RT 213.2' REMOVE 96' EXISTING CHAIN LINK FENCE. COORDINATE DISPOSITION OF EXISTING GATE WITH PROJECT MANAGER/OWNER.

* = MODIFIED TO MATCH TYPE 'D' CURB & GUTTER

DETENTION BASIN
BOTTOM ELEV = 4934.28
APPROXIMATE 100-YEAR WATER SURFACE ELEV = 4937.61
APPROXIMATE 10-YR WATER SURFACE ELEV = 4936.36
WATER QUALITY RETENTION VOLUME = 0
TOP OF POND ELEV = 4941.00

CLF-01 BUILD CHAIN LINK FENCE 6' (SEE SHEET 10-20 FOR ADDITIONAL INFORMATION)

CLG-01 BUILD 2 - 8' S X 6' R CHAIN LINK GATES (SEE SHEET 10-20 FOR ADDITIONAL INFORMATION)

CWB-X1 BUILD 100' CONCRETE WALL BARRIER 42" STA 1005+11.50, RT 100.63' TO STA 1006+10.67, RT 100.63'

DESIGN REVIEW COMMITTEE

CITY ENGINEER APPROVAL

KEVIN W. EADES NEW MEXICO 14481 REGISTERED PROFESSIONAL ENGINEER 7/10/2020

NO.	DESCRIPTION	DATE	BY
4			
3			
2			
1			

REVISIONS (OR CHANGE NOTICES)

BERNALILLO COUNTY
PUBLIC WORKS DIVISION
TECHNICAL SERVICES DEPARTMENT

SUNPORT BOULEVARD EXTENSION
DRAINAGE PLAN
SUNPORT BLVD.

EMAIL:
PHONE:
DESIGNED BY:

bbailey 7/12/2020 2:27:43 PM Design File: I:\BHI\BHI161-11(BASIC SERVICES)\DWGS\Microstation\Plans\10_Sheets\BHI161-11_10-2.dgn

DESIGNED BY: NEW MEXICO PROJECT NO. A300160 MOLZENCORBIN SHEET NO. 10 - 2

DRAINAGE KEY NOTES

(3) BUILD OUTLET PAD WITH STRUCTURAL CONCRETE CLASS A. SEE SHEETS 10-20 & 10-21 FOR ADDITIONAL INFORMATION)

(4) BUILD DETENTION POND WITH HDPE LINER. (SEE SHEETS 10-20 TO 10-22B, FOR ADDITIONAL INFORMATION)

(5) BUILD 16' WIDE MAINTENANCE ACCESS RD (SEE SHEET 10-20 FOR ADDITIONAL INFORMATION)

(6) BUILD 10' W X 2' THICK RIPRAP PAD. ADJUST LIMITS IN FIELD, AS NEEDED. (SEE SHEETS 10-10, 10-13 &10-20 FOR ADDITIONAL INFORMATION)

(6A) BUILD 5' W X 1' THICK RIPRAP CLASS A FROM P-45C TO P-45. (SEE PROFILE, SHEET 10-15 FOR ADDITIONAL INFORMATION)

(6B) BUILD 1' THICK RIPRAP CL A LINED 2:1 SLOPE TREATMENT. (SEE DETAIL, SHEET 10-20 FOR ADDITIONAL INFORMATION.)

(6C) BUILD CONCRETE MAINTENANCE ACCESS STAIRS WITH PLATFORMS AND PEDESTRIAN RAILINGS. (SEE SHEETS 10-20 & 10-22 FOR ADDITIONAL INFORMATION)

(8) BUILD 5' W X 1' THICK RIPRAP CL A AROUND PERIMETER OF INLET. GEOTEXTILE INCIDENTAL TO RIPRAP.

DRAINAGE STRUCTURE BUILD NOTES

P-6
NMDOT SDI TYPE II - B
STA 1002+93.64, LT 35.0' (LOG)
LIP OF GUTTER 4942.20
FLOWLINE ELEV 4942.21
GRATE 4941.85
TOC 4942.74
24" OUT (S) 4937.85

P-7
NMDOT SDI TYPE II - B
1002+93.64, RT 41.00' (LOG)
LIP OF GUTTER 4942.08
FLOWLINE ELEV 4941.96
GRATE 4941.73
TOC 4942.62
24" IN (N) 4937.47
24" OUT (S) 4937.42

P-17B
STA 1003+02.2, RT 160.1'
42" END SECTION (NMDOT)
INV OUT 4934.32

P-16
COA DRAIN MANHOLE
TYPE C - 8' DIA.
STA 1002+93.64 , RT 60.63'
RIM/COVER ELEV 4942.29
42" IN (W) 4934.56
24" IN (N) 4937.36
42" OUT (E) 4934.51

P-16A - 8' DIA SPECIAL MANHOLE
(PAID UNDER ITEM 622100 - SPECIAL MANHOLE)
STA 1002+92.7, RT 72.6'
RIM/COVER ELEV 4942.2
42" IN (N) 4934.57
42" OUT (S) 4934.52
(SEE DETAIL, SHEET 10-25)

P-17
COA DRAIN MANHOLE TYPE C - 8' DIA.
STA 1002+85.7, RT 158.8'
RIM/COVER ELEV 4941.7
42" IN (N) 4934.38
42" OUT (E) 4934.33

P-17A
COA MODIFIED INLET TYPE D
SINGLE GRATE (ALBUQUERQUE)
STD DWG 2220-MODIFIED
(SEE SHEET 10-21 FOR DETAILS)
STA 1003+35.02, RT 87.0',
GRATE ELEV 4938.0
18" OUT 4934.28

P-18
COA DRAIN MANHOLE
TYPE C - 4' DIA.
STA 1003+35.06, RT 47.75'
RIM/COVER ELEV 4943.63
18" IN (S) 4934.24
18" OUT (W) 4934.19

P-31
NMDOT SDI TYPE I - A CURB
STA 1008+78.94, RT 47.20' (LOG)
LIP OF GUTTER 4973.18
FLOWLINE ELEV 4973.16 = GRATE
TOC 4973.72
24" IN (E) 4969.16
24" OUT (NW) 4969.11

P-45
STA 351+03.54, RT 62.63'
24" END SECTION
INV IN = 4960.61

P-32
NMDOT SDI TYPE I-B (*)
STA 1008+33.86, RT 5.39'
(LIP OF GUTTER)
LIP OF GUTTER 4970.67
FLOWLINE 4970.65 = GRATE
TOC 4971.14
24" IN (SE) 4965.65
24" OUT (W) 4965.60

P-33
NMDOT STORM DRAIN MANHOLE
TYPE C 6' DIA
STA 1008+00.00, RT 6.59'
RIM/COVER ELEV 4968.45
24" IN (NE) 4960.53
18" IN (E) 4963.67
24" OUT (SW) 4954.75

P-33B
NMDOT STORM DRAIN MANHOLE
TYPE C 6' DIA
STA 1006+69.9, RT 102.1'
RIM/COVER ELEV 4949.10
24" INV IN (NE) 4943.23
24" INV IN (E) 4943.23
24" INV OUT (SW) 4943.18

P-46
24" END SECTION
STA 1006+17.6, RT 124'
INV OUT = 4938.48

P-33C
NMDOT MEDIAN DROP INLET TYPE I
STA 1008+05.00, RT 110'
GRATE ELEV 4959.8
24" OUT (W) = 4953.8

* = MODIFIED TO MATCH TYPE 'D' CURB & GUTTER

P-33A
6' DIA SPECIAL MANHOLE
(PAID UNDER ITEM 622100 - SPECIAL MANHOLE)
STA 1006+52.7, RT 99.6' (SEE DETAIL, SHEET 10-24)
RIM/COVER ELEC 4948.9
24" INV IN (NE) = 4941.47
24" INV OUT (SW) = 4941.42

P-45A
NMDOT SDI TYPE III - B
STA 351+00.00, LT 17.00' (LOG)
LIP OF GUTTER 4967.54
FLOWLINE ELEV 4967.52 = GRATE
TOC 4968.08
24" OUT (E) = 4963.68

P-45B
NMDOT SDI TYPE II - B
STA 351+00, RT 25.96' (LOG)
LIP OF GUTTER 4967.36
FLOWLINE ELEV 4967.34 = GRATE
TOC 4967.90
24" INV IN (W) = 4963.46
24" INV OUT (E) = 4963.41

P-45C
STA 351+10.3, RT 50.82'
24" END SECTION
INV OUT = 4963.26

STORM DRAIN CULVERT BUILD NOTES

SD-4
SEE SHEET 10-1
SD-8
SEE SHEET 10-1
SD-10
BUILD 76' X 24" STORM DRAIN
CULV PIPE BETWEEN P-6 & P-7
SD-11
BUILD 12' X 24" STORM DRAIN
CULV PIPE BETWEEN P-7 & P-16
SD-8A
BUILD 4' X 42" RCP CL IV
BETWEEN P-P-16 & P-16A
SD-12
BUILD 79' X 42" RCP CL IV
BETWEEN P-16A & P-17
SD-12A
BUILD 5' X 42" RCP CL IV BETWEEN
P-17 & P-17B
SD-13
BUILD 35.5' X 18" DUCTILE IRON PIPE
BETWEEN P-17A & P-18 (NMDOT)
SD-14
BUILD 148' X 24" STORM DRAIN
CULV PIPE BETWEEN P-33 & P-33B

SD-14B
BUILD 4' X 24" STORM DRAIN
CUL PIPE BETWEEN P-33B & P-33A
SD-14A
BUILD 50' X 24" STORM DRAIN
CULV PIPE BETWEEN P-33A & P-46
SD-15
BUILD 107' X 24" STORM DRAIN
CULV PIPE BETWEEN P-33 & P-45
SD-16
BUILD 30' X 24" STORM DRAIN
CULV PIPE BETWEEN P-33 & P32
SD-17
BUILD 57.5' X 24" STORM DRAIN
CULV PIPE BETWEEN P-32 & P-31
SD-18
SEE SHEET 10-3
SD-15A
BUILD 44' X 24" STORM DRAIN
CULV PIPE BETWEEN P-45A & P-45B
SD-15B
BUILD 18' X 24" STORM DRAIN
CULV PIPE BETWEEN P-45B & P-45C
SD-14C
BUILD 118' X 24" STORM DRAIN
CULV PIPE BETWEEN P-33C & P-33B

DESIGN REVIEW COMMITTEE

CITY ENGINEER APPROVAL

KEVIN W. EADES
NEW MEXICO
14481
REGISTERED PROFESSIONAL ENGINEER
9/14/2020

NO.	DESCRIPTION	DATE	BY
4			
3			
2			
1			

REVISIONS (OR CHANGE NOTICES)

BERNALILLO COUNTY
PUBLIC WORKS DIVISION
TECHNICAL SERVICES DEPARTMENT

SUNPORT BOULEVARD EXTENSION
SHEET 10-2 DRAINAGE NOTES
SUNPORT BLVD.

EMAIL:
PHONE:
DESIGNED BY:

DRAINAGE KEY NOTES

(3) BUILD OUTLET PAD WITH STRUCTURAL CONCRETE CLASS A. SEE SHEETS 10-20 & 10-21 FOR ADDITIONAL INFORMATION)

(4) BUILD DETENTION POND WITH HDPE LINER. (SEE SHEETS 10-20 TO 10-22A, FOR ADDITIONAL INFORMATION)

(5) BUILD 16' WIDE MAINTENANCE ACCESS RD (SEE SHEET 10-20 FOR ADDITIONAL INFORMATION)

(6) BUILD 10' W X 2' THICK RIPRAP PAD. ADJUST LIMITS IN FIELD, AS NEEDED. (SEE SHEETS 10-10, 10-13 &10-20 FOR ADDITIONAL INFORMATION)

(6A) BUILD 5' W X 1' THICK RIPRAP CLASS A FROM P-45C TO P-45. (SEE PROFILE, SHEET 10-15 FOR ADDITIONAL INFORMATION)

(6B) BUILD 1' THICK RIPRAP CL A LINED 2:1 SLOPE TREATMENT. (SEE DETAIL, SHEET 10-20 FOR ADDITIONAL INFORMATION.)

(6C) BUILD CONCRETE MAINTENANCE ACCESS STAIRS WITH PLATFORMS AND PEDESTRIAN RAILINGS. (SEE SHEETS 10-20 & 10-22 FOR ADDITIONAL INFORMATION)

(8) BUILD 5' W X 1' THICK RIPRAP CL A AROUND PERIMETER OF INLET. GEOTEXTILE INCIDENTAL TO RIPRAP.

DRAINAGE STRUCTURE BUILD NOTES

P-6
NMDOT SDI TYPE II - B
STA 1002+93.64, LT 35.0' (LOG)
LIP OF GUTTER 4942.20
FLOWLINE ELEV 4942.21
GRATE 4941.85
TOC 4942.74
24" OUT (S) 4937.85

P-7
NMDOT SDI TYPE II - B
1002+93.64, RT 41.00' (LOG)
LIP OF GUTTER 4942.08
FLOWLINE ELEV 4941.96
GRATE 4941.73
TOC 4942.62
24" IN (N) 4937.47
24" OUT (S) 4937.42

P-17B
STA 1003+02.2, RT 160.1'
42" END SECTION (NMDOT)
INV OUT 4934.32

P-16
COA DRAIN MANHOLE
TYPE C - 8' DIA.
STA 1002+93.64 , RT 60.63'
RIM/COVER ELEV 4942.29
42" IN (W) 4934.56
24" IN (N) 4937.36
42" OUT (E) 4934.51

P-16A - CS-8 CASCADE SEPARATOR, 8' DIA
(PAID UNDER ITEM 622100 - SPECIAL MANHOLE)
STA 1002+92.7, RT 72.6'
RIM/COVER ELEV 4942.2
42" IN (N) 4934.57
42" OUT (S) 4934.52
(SEE DETAIL, SHEET 10-25)

P-17
COA DRAIN MANHOLE TYPE C - 8' DIA.
STA 1002+85.7, RT 158.8'
RIM/COVER ELEV 4941.7
42" IN (N) 4934.38
42" OUT (E) 4934.33

P-17A
COA MODIFIED INLET TYPE D
SINGLE GRATE (ALBUQUERQUE)
STD DWG 2220-MODIFIED
(SEE SHEET 10-21 FOR DETAILS)
STA 1003+35.02, RT 87.0',
GRATE ELEV 4938.0
18" OUT 4934.28

P-18
COA DRAIN MANHOLE
TYPE C - 4' DIA.
STA 1003+35.06, RT 47.75'
RIM/COVER ELEV 4943.63
18" IN (S) 4934.24
18" OUT (W) 4934.19

P-31
NMDOT SDI TYPE I - A CURB
STA 1008+78.94, RT 47.20' (LOG)
LIP OF GUTTER 4973.18
FLOWLINE ELEV 4973.16 = GRATE
TOC 4973.72
24" IN (E) 4969.16
24" OUT (NW) 4969.11

P-45
STA 351+03.54, RT 62.63'
24" END SECTION
INV IN = 4960.61

P-32
NMDOT SDI TYPE I-B (*)
STA 1008+33.86, RT 5.39'
(LIP OF GUTTER)
LIP OF GUTTER 4970.67
FLOWLINE 4970.65 = GRATE
TOC 4971.14
24" IN (SE) 4965.65
24" OUT (W) 4965.60

P-33
NMDOT STORM DRAIN MANHOLE
TYPE C 6' DIA
STA 1008+00.00, RT 6.59'
RIM/COVER ELEV 4968.45
24" IN (NE) 4960.53
18" IN (E) 4963.67
24" OUT (SW) 4954.75

P-33B
NMDOT STORM DRAIN MANHOLE
TYPE C 6' DIA
STA 1006+69.9, RT 102.1'
RIM/COVER ELEV 4949.10
24" INV IN (NE) 4943.23
24" INV IN (E) 4943.23
24" INV OUT (SW) 4943.18

P-46
24" END SECTION
STA 1006+17.6, RT 124'
INV OUT = 4938.48

P-33C
NMDOT MEDIAN DROP INLET TYPE I
STA 1008+05.00, RT 110'
GRATE ELEV 4959.8
24" OUT (W) = 4953.8

* = MODIFIED TO MATCH TYPE 'D' CURB & GUTTER

P-33A
C-6 CASCADE SEPARATOR
(PAID UNDER ITEM 622100 - SPECIAL MANHOLE)
STA 1006+52.7, RT 99.6' (SEE DETAIL, SHEET 10-24)
RIM/COVER ELEC 4948.9
24" INV IN (NE) = 4941.47
24" INV OUT (SW) = 4941.42

P-45A
NMDOT SDI TYPE III - B
STA 351+00.00, LT 17.00' (LOG)
LIP OF GUTTER 4967.54
FLOWLINE ELEV 4967.52 = GRATE
TOC 4968.08
24" OUT (E) = 4963.68

P-45B
NMDOT SDI TYPE II - B
STA 351+00, RT 25.96' (LOG)
LIP OF GUTTER 4967.36
FLOWLINE ELEV 4967.34 = GRATE
TOC 4967.90
24" INV IN (W) = 4963.46
24" INV OUT (E) = 4963.41

P-45C
STA 351+10.3, RT 50.82'
24" END SECTION
INV OUT = 4963.26

STORM DRAIN CULVERT BUILD NOTES

SD-4
SEE SHEET 10-1
SD-8
SEE SHEET 10-1
SD-10
BUILD 76' X 24" STORM DRAIN
CULV PIPE BETWEEN P-6 & P-7
SD-11
BUILD 12' X 24" STORM DRAIN
CULV PIPE BETWEEN P-7 & P-16
SD-8A
BUILD 4' X 42" RCP CL IV
BETWEEN P-P-16 & P-16A
SD-12
BUILD 79' X 42" RCP CL IV
BETWEEN P-16A & P-17
SD-12A
BUILD 5' X 42" RCP CL IV BETWEEN
P-17 & P-17B
SD-13
BUILD 35.5' X 18" DUCTILE IRON PIPE
BETWEEN P-17A & P-18 (NMDOT)
SD-14
BUILD 148' X 24" STORM DRAIN
CULV PIPE BETWEEN P-33 & P-33B

SD-14B
BUILD 4' X 24" STORM DRAIN
CUL PIPE BETWEEN P-33B & P-33A
SD-14A
BUILD 50' X 24" STORM DRAIN
CULV PIPE BETWEEN P-33A & P-46
SD-15
BUILD 107' X 24" STORM DRAIN
CULV PIPE BETWEEN P-33 & P-45
SD-16
BUILD 30' X 24" STORM DRAIN
CULV PIPE BETWEEN P-33 & P32
SD-17
BUILD 57.5' X 24" STORM DRAIN
CULV PIPE BETWEEN P-32 & P-31
SD-18
SEE SHEET 10-3
SD-15A
BUILD 44' X 24" STORM DRAIN
CULV PIPE BETWEEN P-45A & P-45B
SD-15B
BUILD 18' X 24" STORM DRAIN
CULV PIPE BETWEEN P-45B & P-45C
SD-14C
BUILD 118' X 24" STORM DRAIN
CULV PIPE BETWEEN P-33C & P-33B

DESIGN REVIEW COMMITTEE

CITY ENGINEER APPROVAL

KEVIN W. EADES
NEW MEXICO
14481
REGISTERED PROFESSIONAL ENGINEER
7/10/2020

NO.	DESCRIPTION	DATE	BY
4			
3			
2			
1			

REVISIONS (OR CHANGE NOTICES)

BERNALILLO COUNTY
PUBLIC WORKS DIVISION
TECHNICAL SERVICES DEPARTMENT

SUNPORT BOULEVARD EXTENSION
SHEET 10-2 DRAINAGE NOTES
SUNPORT BLVD.

EMAIL:
PHONE:
DESIGNED BY:

DRAINAGE STRUCTURE BUILD NOTES

P-27
NMDOT MEDIAN DROP INLET TYPE I
STA 1012+00.00, LT 38.12'
(AT FACE OF CWB)
GRATE ELEV 4997.44
24" INV OUT = 4993.44

P-28
NMDOT SDI TYPE I - B (*)
STA 1012+00.00, LT 8.12' (LOG)
LIP OF GUTTER 4996.63
FLOWLINE ELEV 4996.61
TOC 4997.17
24" IN (N) = 4992.61
24" OUT (S) = 4992.56

P-29
NMDOT MEDIAN DROP INLET TYPE I
STA 1012+00.00, RT 37.88'
(AT FACE OF CWB)
GRATE ELEV 4995.87
24" INV IN = 4991.87
24" INV OUT = 4991.82

P-30
NMDOT SDI TYPE I - A CURB
STA 1012+00.00, RT 45.88' (LOG)
LIP OF GUTTER 4995.66
FLOWLINE ELEV 4995.64 = GUTTER
TOC 4996.20
24" IN (N) = 4991.64
24" OUT (W) = 4991.59

P-47
NMDOT SDI TYPE II - B
STA 357+80, LT 17.0' (LOG)
LIP OF GUTTER 4987.50
FLOWLINE ELEV 4987.48 = GRATE
TOC 4987.92
24" INV OUT (SW) = 4982.48

P-48
NMDOT SDI TYPE II - B
STA 357+20, RT 17.0' (LOG)
LIP OF GUTTER 4984.40
FLOWLINE ELEV 4984.38 = GRATE
TOC 4984.84
24" INV IN (NE) = 4978.40
24" INV OUT (SW) = 4978.35

P-49
STA 356+69.3, RT 38.8'
24" END SECTION
INV OUT = 4978.24

(*) = MODIFIED TO MATCH TYPE 'D' CURB & GUTTER

STORM DRAIN CULVERT BUILD NOTES

SD-18
BUILD 310.5' X 24" STORM DRAIN CULV PIPE BETWEEN P-31 & P-30

SD-19
BUILD 7.5' X 24" STORM DRAIN CULV PIPE BETWEEN P-30 & P-29

SD-20
BUILD 40' X 24" STORM DRAIN CULV PIPE BETWEEN P-29 & P28

SD-21
BUILD 30' X 24" STORM DRAIN CULV PIPE BETWEEN P-28 & P-27

SD-38
BUILD 67.5" X 24" STORM DRAIN CULV PIPE BETWEEN P-47 & P-48

SD-39
BUILD 53.5' X 24" STORM DRAIN CULV PIPE BETWEEN P-48 & P-49

DRAINAGE PROFILE SHEET REFERENCES

SYSTEM	SHEET
P-30 TO P-46	10-12 & 10-13
P-27 TO P-30	10-13
P-47 TO P-49	10-15

DRAINAGE KEY NOTES

(6C) *BUILD 5' W X 1' THICK RIPRAP CLASS A (SEE SHEET 10-15 FOR ADDITIONAL INFORMATION)*

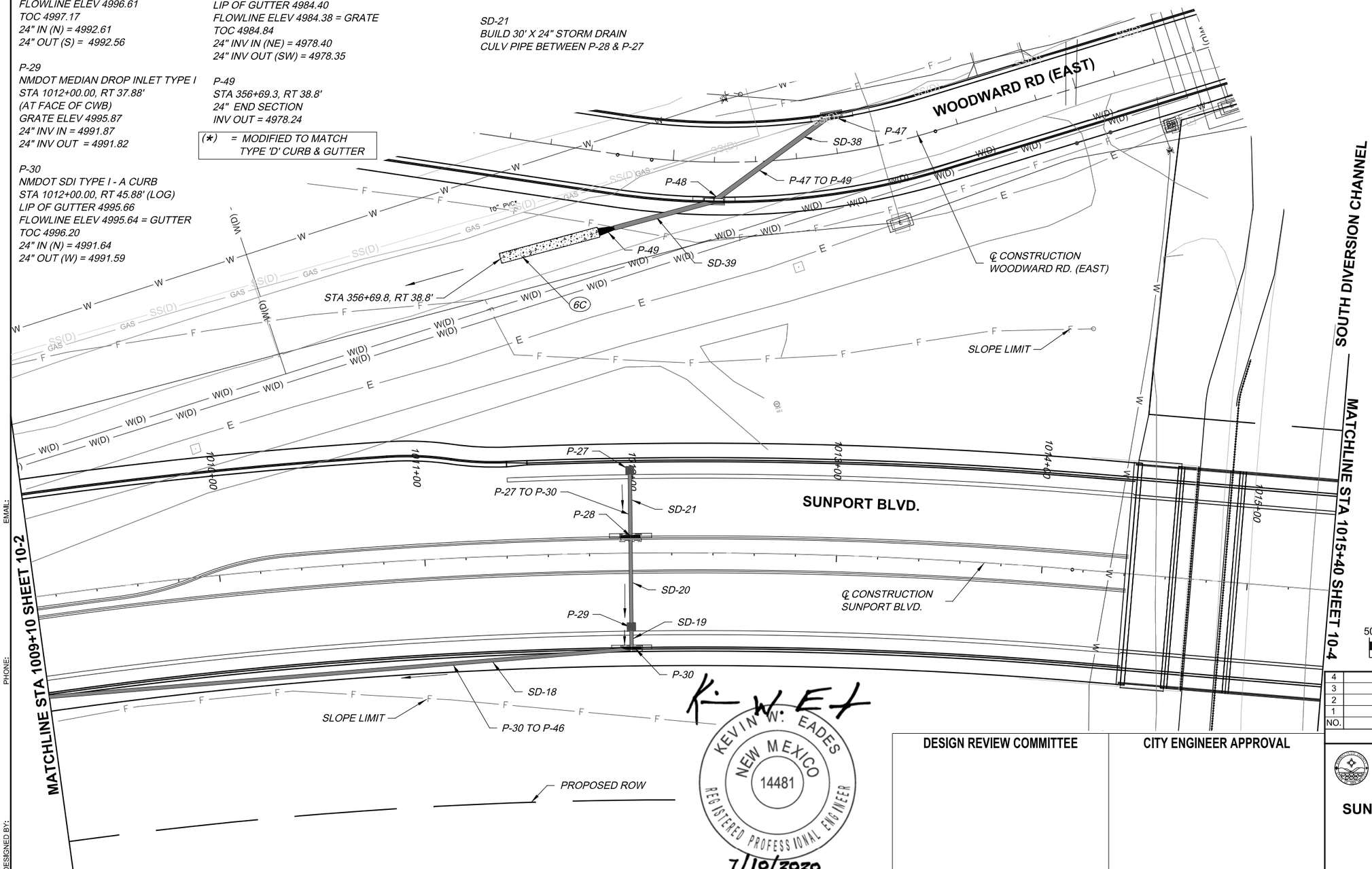

KEVIN W. EADES
NEW MEXICO
14481
REGISTERED PROFESSIONAL ENGINEER
7/10/2020

NO.	DESCRIPTION	DATE	BY
4			
3			
2			
1			

REVISIONS (OR CHANGE NOTICES)

DESIGN REVIEW COMMITTEE	CITY ENGINEER APPROVAL

BERNALILLO COUNTY
PUBLIC WORKS DIVISION
TECHNICAL SERVICES DEPARTMENT

SUNPORT BOULEVARD EXTENSION
DRAINAGE PLAN
SUNPORT BLVD.

EMAIL:
PHONE:
DESIGNED BY:

bbailey 7/9/2020 10:18:29 AM Design File: I:\BHI\BHI161-11(BASIC SERVICES)\DWGS\Microstation\Plans\10_Sheets\BHI161-11_10-3.dgn

DESIGNED BY: NEW MEXICO PROJECT NO. A300160 MOLZENCORBIN

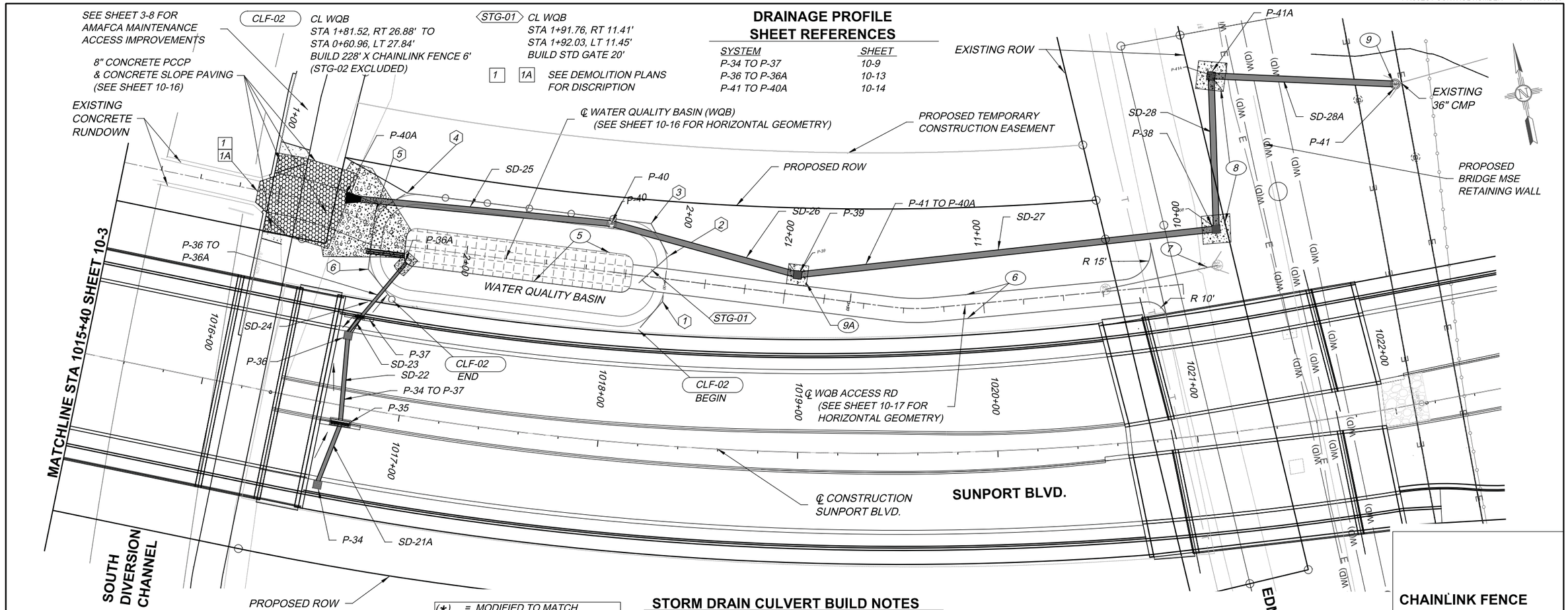

DRAINAGE PROFILE SHEET REFERENCES

SYSTEM	SHEET
P-34 TO P-37	10-9
P-36 TO P-36A	10-13
P-41 TO P-40A	10-14

DRAINAGE STRUCTURE BUILD NOTES

(*) = MODIFIED TO MATCH TYPE 'D' CURB & GUTTER

P-34
NMDOT MEDIAN DROP INLET TYPE I
STA 1016+66.00, RT 39.04'
(AT FACE OF CWB)
GUTTER ELEV 5029.62
24" OUT (N) = 5025.32

P-35 (*)
NMDOT SDI TYPE II - B
STA 1016+71.35, RT 9.07' (LOG)
LIP OF GUTTER 5029.30
FLOWLINE ELEV 5029.28 = GRATE
TOC 5029.84
24" IN (S) = 5025.17
24" OUT (N) = 5025.12

P-36
NMDOT MEDIAN DROP INLET TYPE I
STA 1016+67.63, LT 36.95'
(AT FACE OF CWB)
GRATE ELEV 5028.37
24" INV IN (S) = 5024.13
24" INV IN (NE) = 5024.13

P-37
NMDOT SDI TYPE II - A CURB
STA 1016+71.01, LT 44.95' (LOG)
GRATE = 5028.38
24" OUT (S) = 5024.38

P-36A
STA 1016+90.89, LT 75.79'
18" INV OUT = 5000.4
(SEE SHEET 10-18 FOR ENERGY DISSIPATOR SYSTEM)

P-41
NMDOT STORM DRAIN MANHOLE
TYPE C 8' DIA
STA 1022+29.46, LT 159.14'
RIM/COVER ELEV 5032.59
36" CMP INV IN (E) 5021.64
36" INV OUT (NW) 5018.59

P-41A
NMDOT MEDIAN DROP INLET TYPE I
STA 1021+29.54, LT 177.81'
GRATE ELEV 5017.68
36" INV IN (SE) = 5011.68
36" INV OUT (SW) = 5009.63

P-38
NMDOT MEDIAN DROP INLET TYPE I
STA 1021+21.92, LT 101.62'
GRATE ELEV 5018.18
36" INV IN (NE) = 5009.27
36" INV OUT (W) = 5009.22

P-39
NMDOT MEDIAN DROP INLET TYPE I
STA 1018+97.59, LT 88.45"
(ACCESS RD STA 11+94.52, RT 10')
GRATE ELEV 5004.94 (ELEV OF DITCHLINE "SAG")
42" INV IN (E) = 4999.94
42" INV OUT (W) = 4999.87
(SEE SHEET 10-17 FOR PLACEMENT DETAIL)

P-40
NMDOT STORM DRAIN MANHOLE
TYPE C 8' DIA
STA 1017+96.70, LT 108.42'
RIM 5004.45
42" IN (E) 4999.42
42" OUT (W) 4999.37

P-40A
STA 1016+53.02, LT 102.29'
42" END SECTION
INV OUT = 4998.72

50 25 0 50
1" = 50'

STORM DRAIN CULVERT BUILD NOTES

SD-21A
BUILD 31' X 24" STORM DRAIN
CULV PIPE BETWEEN P-34 & P-35

SD-22
BUILD 41' X 24" STORM DRAIN
CULV PIPE BETWEEN P-35 & P-36

SD-23
BUILD 10' X 24" STORM DRAIN
CULV PIPE BETWEEN P-36 & P-37

SD-24
BUILD 70' X 18" DUCTILE IRON PIPE
BETWEEN P-36 & P-36A

SD-27
BUILD 207' X 36" STORM DRAIN
CULV PIPE BETWEEN P-38 & P-39

SD-26
BUILD 90.5' X 42" STORM DRAIN
CULV PIPE BETWEEN P-39 & P-40

SD-25
BUILD 123.5' X 42" STORM DRAIN
CULV PIPE BETWEEN P-40 & P-40A

SD-28
BUILD 72' X 36" STORM DRAIN
CULV PIPE BETWEEN P-41A & P-38

SD-28A
BUILD 87.5' X 36" STORM DRAIN
CULV PIPE BETWEEN P-41 AND P-41A

DRAINAGE KEY NOTES

5 BUILD WATER QUALITY BASIN (SEE DETAILS, SHEETS 10-16 & 10-17)

6 BUILD 12' WIDE MAINTENANCE ACCESS RD. (SEE DETAILS, SHEET 10-17)

7 REMOVE AND DISPOSE OF 57' X 36" CMP AND END SECTIONS. GRADE INLET & OUTLET TO DRAIN.

8 BUILD 5' W X 1' THICK RIPRAP CL A AROUND PERIMETER OF INLETS GEOTEXTILE INCIDENTAL TO RIPRAP

9 REMOVE AND DISPOSE OF EXISTING 36" END SECTION

9A BUILD 3' W X 1' THICK RIPRAP CL A AROUND PERIMETER OF INLET GEOTEXTILE INCIDENTAL TO RIPRAP

CHAINLINK FENCE KEY LAYOUT NOTES

WQB STATIONING

1 STA 1+91.76, RT 11.41'

2 STA 1+92.03, LT 11.45'

3 STA 1+81.28, LT 26.50'

4 STA 0+44.7, RT 21.7'

5 STA 0+39.92, LT 6.16'

6 STA 0+53.99, RT 20.66'

KEVIN W. EADES
NEW MEXICO
14481
REGISTERED PROFESSIONAL ENGINEER
7/10/2020

DESIGN REVIEW COMMITTEE

CITY ENGINEER APPROVAL

NO.	DESCRIPTION	DATE	BY
4			
3			
2			
1			

REVISIONS (OR CHANGE NOTICES)

BERNALILLO COUNTY
PUBLIC WORKS DIVISION
TECHNICAL SERVICES DEPARTMENT

SUNPORT BOULEVARD EXTENSION
DRAINAGE PLAN
SUNPORT BLVD.

EMAIL:
PHONE:
DESIGNED BY:

DRAINAGE STRUCTURE BUILD NOTES

P-8
COA SDI SINGLE TYPE D
STA 4993+34.52, LT 24.00' (LOG)
LIP OF GUTTER 4939.71
FLOWLINE ELEV 4939.69 = GRATE
TOC 4940.25
18" OUT 4936.15

P-9
COA DRAIN MANHOLE
TYPE C - 4' DIA.
STA 4993+34.52, RT 17.19'
RIM/COVER ELEV 4939.85
18" IN (E) 4936.12
18" IN (W) 4936.11
30" OUT (N) 4936.06

P-10
COA SDI SINGLE TYPE D
STA 4993+34.52, RT 24.00' (LOG)
LIP OF GUTTER 4939.71
FLOWLINE ELEV 4939.69 = GRATE
TOC 4940.25
18" OUT 4936.15

STORM DRAIN CULVERT BUILD NOTES

SD-29
BUILD 39' X 18" RCP CL IV
BETWEEN P-8 & P-9

SD-30
BUILD 5' X 18" RCP CL IV
BETWEEN P-9 & P-10

SD-31
BUILD 484' X 30" RCP CL IV
BETWEEN P-9 & P-12

DRAINAGE PROFILE SHEET REFERENCES

SYSTEM	SHEET
P-9 TO P-17	10-10
P-8 TO P-10	10-8

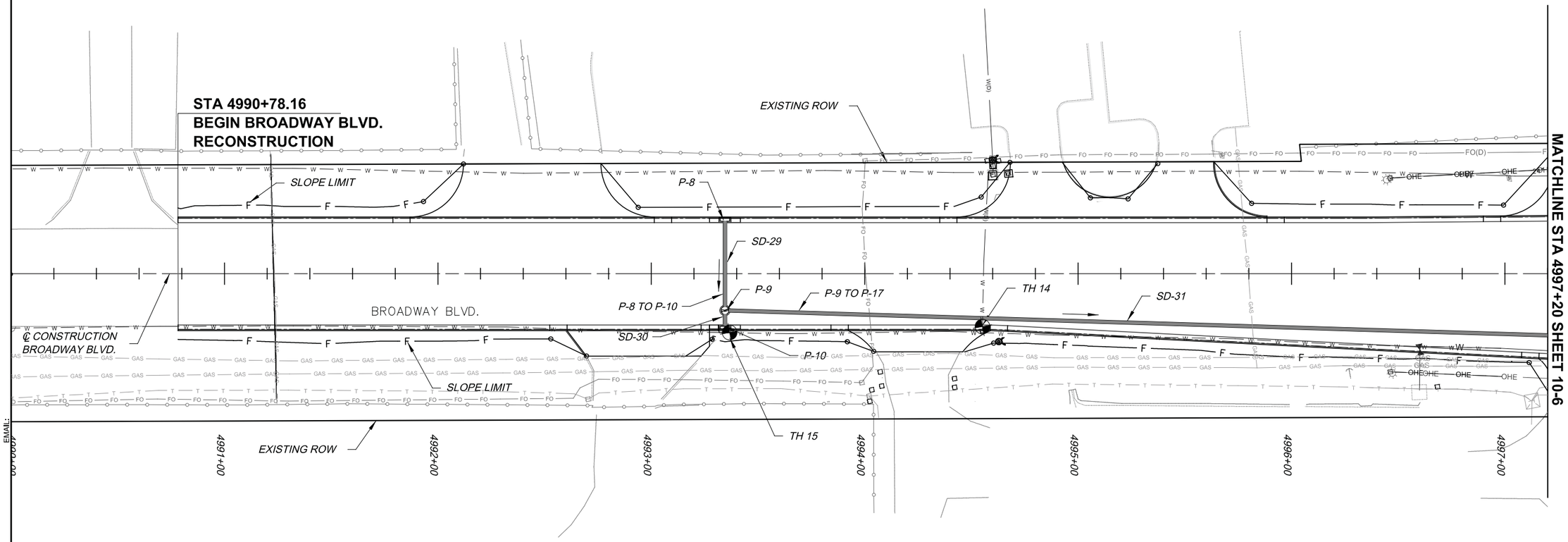

50 25 0 50
1" = 50'

K. W. E.

KEVIN W. EADES
NEW MEXICO
14481
REGISTERED PROFESSIONAL ENGINEER
7/10/2020

DESIGN REVIEW COMMITTEE	CITY ENGINEER APPROVAL

NO.	DESCRIPTION	DATE	BY
4			
3			
2			
1			

REVISIONS (OR CHANGE NOTICES)

BERNALILLO COUNTY
PUBLIC WORKS DIVISION
TECHNICAL SERVICES DEPARTMENT

SUNPORT BOULEVARD EXTENSION
DRAINAGE PLAN
BROADWAY BLVD.

EMAIL:
PHONE:
DESIGNED BY:

DRAINAGE STRUCTURE BUILD NOTES

P-11
COA SDI SINGLE TYPE D
STA 4998+23.60, LT 25.47' (LOG)
LIP OF GUTTER 4939.29
FLOWLINE ELEV 4939.27 = GRATE
TOC 4939.83
24" OUT 4935.71

P-12
COA DRAIN MANHOLE
TYPE C - 6' DIA.
STA 4998+23.60, RT 31.97'
RIM/COVER ELEV 4939.16
30" IN (S) 4935.07
30" IN (E) 4935.10
24" IN (W) 4935.43
36" OUT (N) 4935.02

P-13
COA SDI DOUBLE TYPE D &
COA SDI SINGLE TYPE D
STA 4998+23.60, RT 52.30' (LOG)
LIP OF GUTTER 4938.75
FLOWLINE ELEV 4938.73
TOC 4939.29
30" OUT 4935.19

P-14, P-20, P-19, P-19A & P-19B
SEE SHEET 10-1

P-24
COA SDI DOUBLE TYPE D
STA 5001+22.31, LT 39.57' (LOG)
LIP OF GUTTER 4939.09
FLOWLINE ELEV 4938.97 = GRATE
TOC 4939.63
24" OUT 4935.53

P-26
COA SDI DOUBLE TYPE D
STA 5001+22.31, RT 38.18' (LOG)
LIP OF GUTTER 4939.11
FLOWLINE ELEV 4938.99 = GRATE
TOC 4939.65
24" OUT 4935.55

P-13A
STA 4998+26.22, RT 69.76'
TOP OF PERFORATED
OUTLET COVER (INCIDENTAL TO 18" RCP CL IV)
4939.5+/-

P-25
COA DRAIN MANHOLE
TYPE C - 6' DIA.
STA 5001+22.31, RT 33.33'
RIM/COVER ELEV 4939.21
36" IN (N) 4935.18
18" IN (E) 4935.54
24" IN (W) 4935.18
36" OUT (S) 4935.13

P-25A
COA DRAIN MANHOLE
TYPE C - 6' DIA.
STA 5000+76.32, RT 35.58'
RIM/COVER ELEV 4939.75
36" IN (N) 4935.12
36" OUT (S) 4935.07

DRAINAGE PROFILE SHEET REFERENCES

SYSTEM	SHEET
P-9 TO P-17	10-10
P-11 TO P-13	10-8
P-17A TO P-20	10-11
P-24 TO P-26	10-9
P-22 TO P-14	10-11
P-19B	10-1

STORM DRAIN CULVERT BUILD NOTES

SD-9
BUILD 44' X 36" DUCTILE IRON PIPE
BETWEEN P-25 & P-25A

SD-9A
BUILD 132' X 36" DUCTILE IRON PIPE
BETWEEN P--25A & P-14

SD-31
SEE SHEET 10-5

SD-31A
BUILD 55' X 24" RCP CL IV
BETWEEN P-11 & P-12

SD-31B
BUILD 17' X 24" RCP CL IV
BETWEEN P-12 & P-13

SD-32
BUILD 110' X 36" RCP CL IV
BETWEEN P-12 & P-14

SD-33
BUILD 71' X 29" S x 18" R
ELLIPTICAL CULVERT PIPE ARCH
BETWEEN P-24 & P-25

SD-34
BUILD 3' X 18" RCP CL IV
BETWEEN P-25 & P-26

SD-35
BUILD 359' X 36" RCP CL IV
BETWEEN P-22 & P-25

SD-40
BUILD 15' X 18" RCP CL IV
BETWEEN EXFILTRATION TRENCH (P-13A)
& P-13

SD-3, SD-3A
SEE SHEET 10-1

DRAINAGE KEY NOTES

9A STA 4998+21.3 TO STA 4999+26.1, RT
BUILD 1' THICK RIPRAP CL A
EXFILTRATION TRENCH. (SEE DETAIL
THIS SHEET)

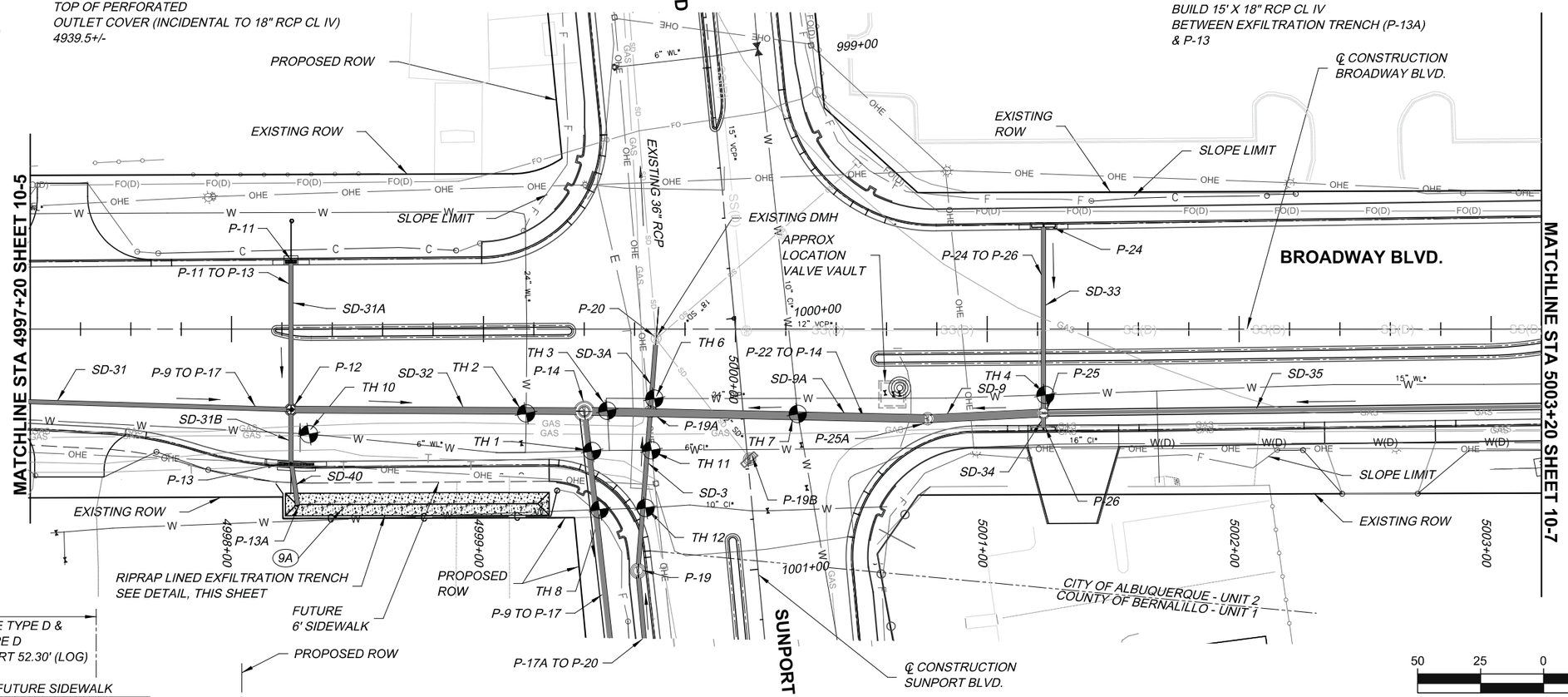

50 25 0 50
1" = 50'

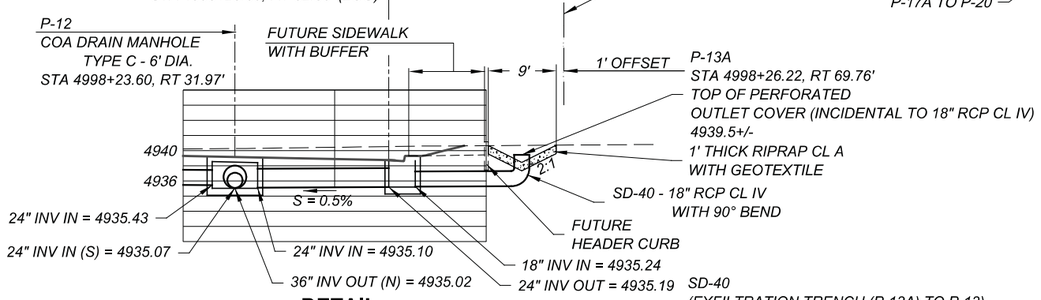

DETAIL
RIPRAP LINED EXFILTRATION TRENCH
NOT TO SCALE

NO.	DESCRIPTION	DATE	BY
4			
3			
2			
1			

REVISIONS (OR CHANGE NOTICES)

DESIGN REVIEW COMMITTEE	CITY ENGINEER APPROVAL

BERNALILLO COUNTY
PUBLIC WORKS DIVISION
TECHNICAL SERVICES DEPARTMENT

SUNPORT BOULEVARD EXTENSION
DRAINAGE PLAN
BROADWAY BLVD.

KEVIN W. EADES
NEW MEXICO
14481
REGISTERED PROFESSIONAL ENGINEER
7/10/2020

EMAIL:
PHONE:
DESIGNED BY:

DRAINAGE STRUCTURE BUILD NOTES

P-21
COA SDI SINGLE TYPE D
STA 5004+83.97, LT 32.67' (LOG)
LIP OF GUTTER 4939.58
FLOWLINE ELEV 4939.56 = GRATE
TOC 4940.12
18" OUT 4936.02

P-22
COA DRAIN MANHOLE
TYPE C - 6' DIA.
STA 5004+84.83, RT 28.59'
RIM/COVER ELEV 4939.66
18" IN (E) 4936.00
18" IN (W) 4935.72
36" OUT (S) 4935.67

P-23
COA SDI SINGLE TYPE D
STA 5004+84.90, RT 33.32' (LOG)
LIP OF GUTTER 4939.57
FLOWLINE ELEV 4939.55 = GRATE
TOC 4940.11
18" OUT 4936.01

STORM DRAIN CULVERT BUILD NOTES

SD-35
SEE SHEET 10-6

SD-36
BUILD 3' X 18" RCP CL IV
BETWEEN P-23 & P-22

SD-37
BUILD 59' X 18" RCP CL IV
BETWEEN P-22 & P-21

DRAINAGE KEY NOTES

(10) *STA 5004+91.6, RT 40.8'*
REMOVE EXISTING DROP INLET
& 45' X EXISTING 24" RCP.
PLUG WITH STRUCTURAL CONCRETE
CLASS A, AND ABANDON 24" INLET
AT EXISTING DRAIN MANHOLE
(INCIDENTAL TO ITEM 601000 - REMOVAL OF
STRUCTURES AND OBSTRUCTIONS)

DRAINAGE PROFILE SHEET REFERENCES

SYSTEM	SHEET
P-21 TO P-23	10-8
P-22 TO P-14	10-11

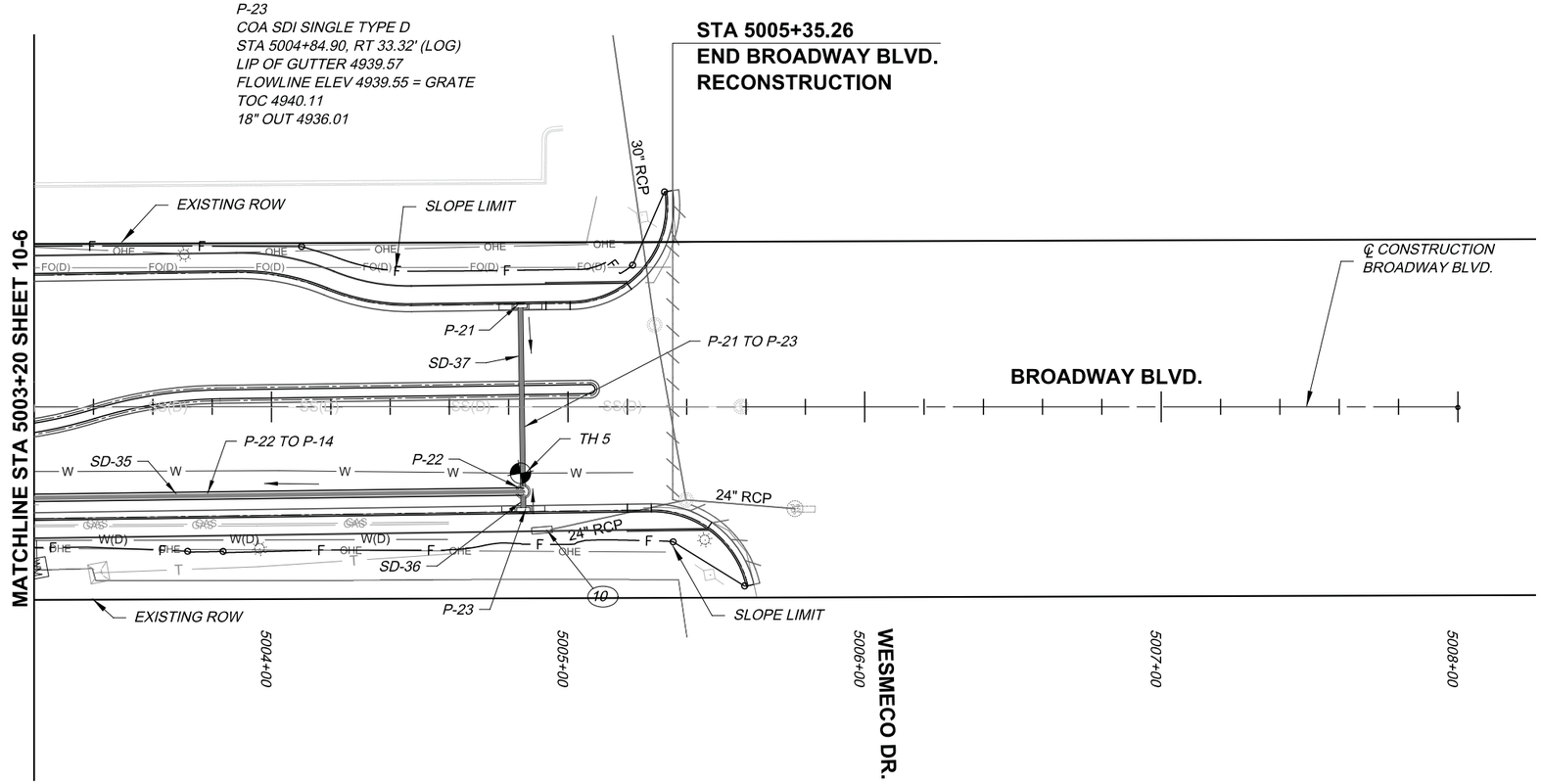

50 25 0 50
1" = 50'

NO.	DESCRIPTION	DATE	BY
4			
3			
2			
1			

REVISIONS (OR CHANGE NOTICES)

KEVIN W. EADES
NEW MEXICO
14481
REGISTERED PROFESSIONAL ENGINEER
7/10/2020

DESIGN REVIEW COMMITTEE	CITY ENGINEER APPROVAL

BERNALILLO COUNTY
PUBLIC WORKS DIVISION
TECHNICAL SERVICES DEPARTMENT

SUNPORT BOULEVARD EXTENSION
DRAINAGE PLAN
BROADWAY BLVD.

EMAIL:
PHONE:
DESIGNED BY:

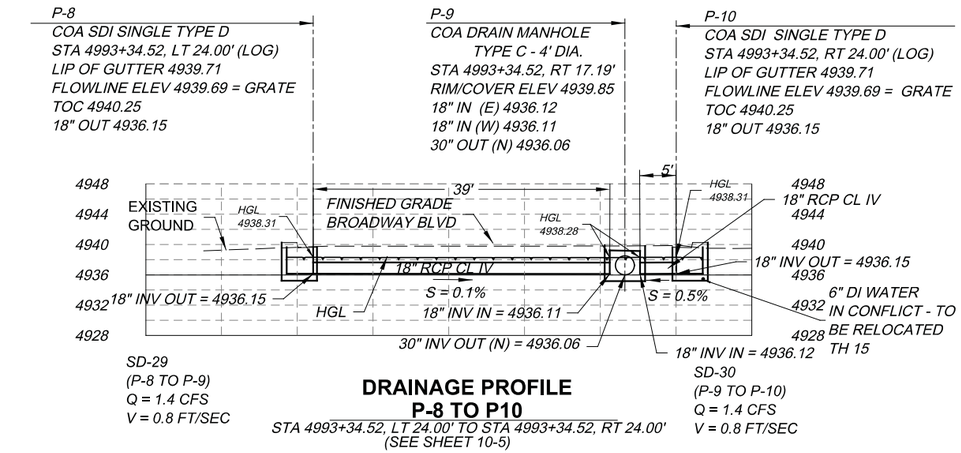

DRAINAGE PROFILE
P-8 TO P10

STA 4993+34.52, LT 24.00' TO STA 4993+34.52, RT 24.00'
(SEE SHEET 10-5)

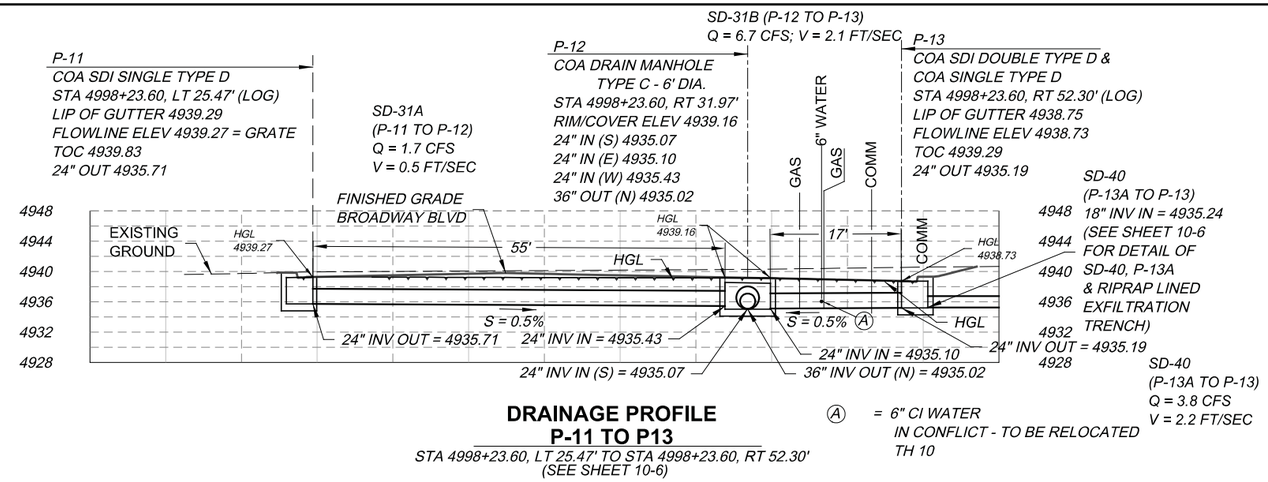

Ⓐ = 6" CI WATER
IN CONFLICT - TO BE RELOCATED
TH 10

DRAINAGE PROFILE
P-11 TO P13

STA 4998+23.60, LT 25.47' TO STA 4998+23.60, RT 52.30'
(SEE SHEET 10-6)

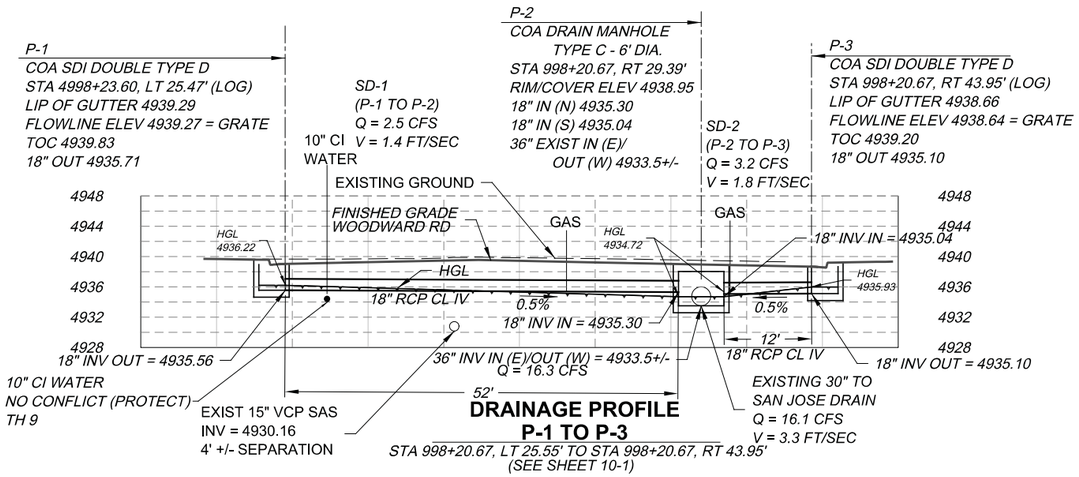

DRAINAGE PROFILE
P-1 TO P-3

STA 998+20.67, LT 25.55' TO STA 998+20.67, RT 43.95'
(SEE SHEET 10-1)

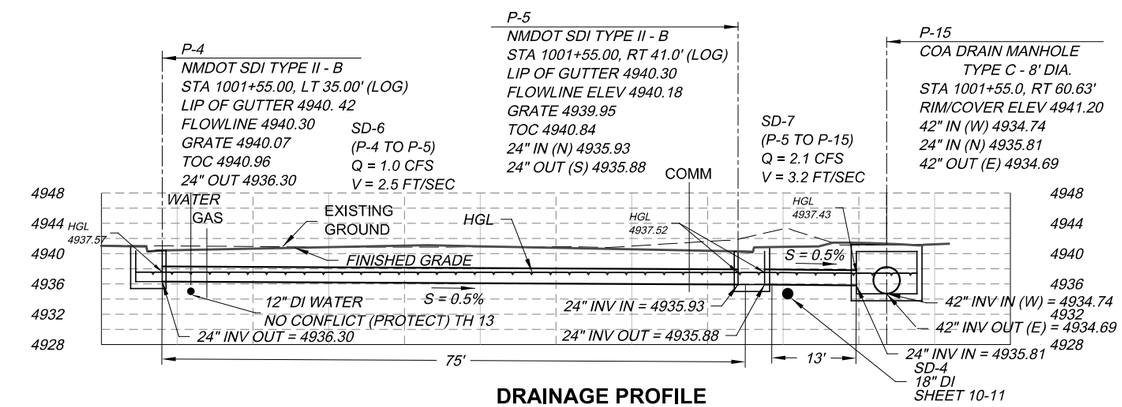

DRAINAGE PROFILE
P-4 TO P-15

STA 1001+55.00, LT 35.00' TO STA 100+55.00, RT 60.63'
(SEE SHEET 10-1)

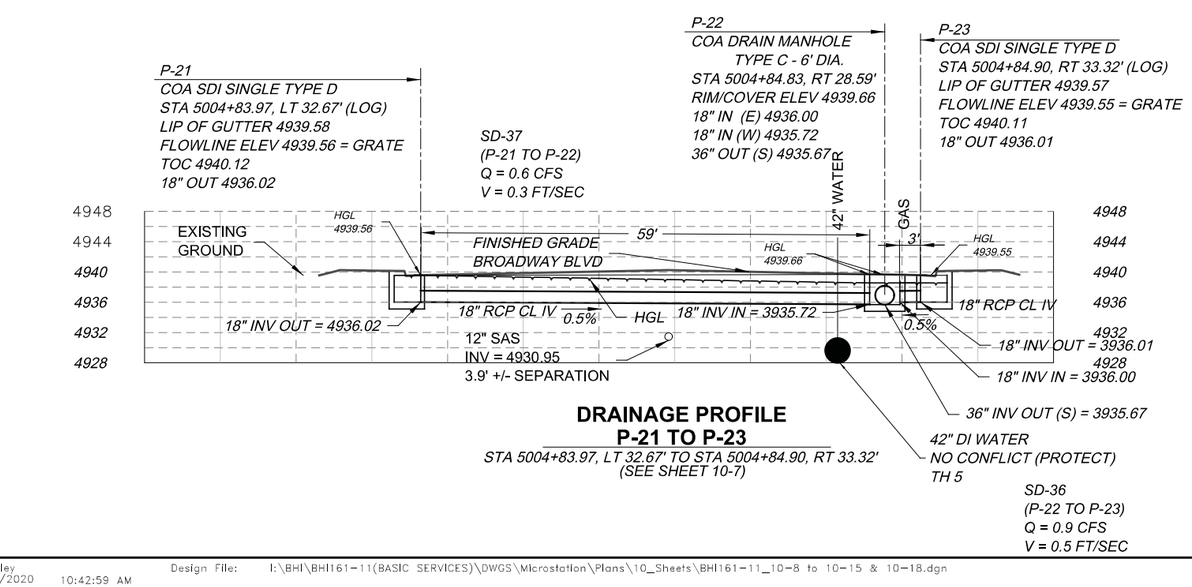

DRAINAGE PROFILE
P-21 TO P-23

STA 5004+83.97, LT 32.67' TO STA 5004+84.90, RT 33.32'
(SEE SHEET 10-7)

SCALE: 1" = 20' (HORIZONTAL & VERTICAL)

DESIGN REVIEW COMMITTEE	CITY ENGINEER APPROVAL

NO.	DESCRIPTION	DATE	BY
4			
3			
2			
1			

REVISIONS (OR CHANGE NOTICES)

BERNALILLO COUNTY
PUBLIC WORKS DIVISION
TECHNICAL SERVICES DEPARTMENT

SUNPORT BOULEVARD EXTENSION

DRAINAGE PROFILES

DESIGNED BY: designer PHONE: phone EMAIL: email

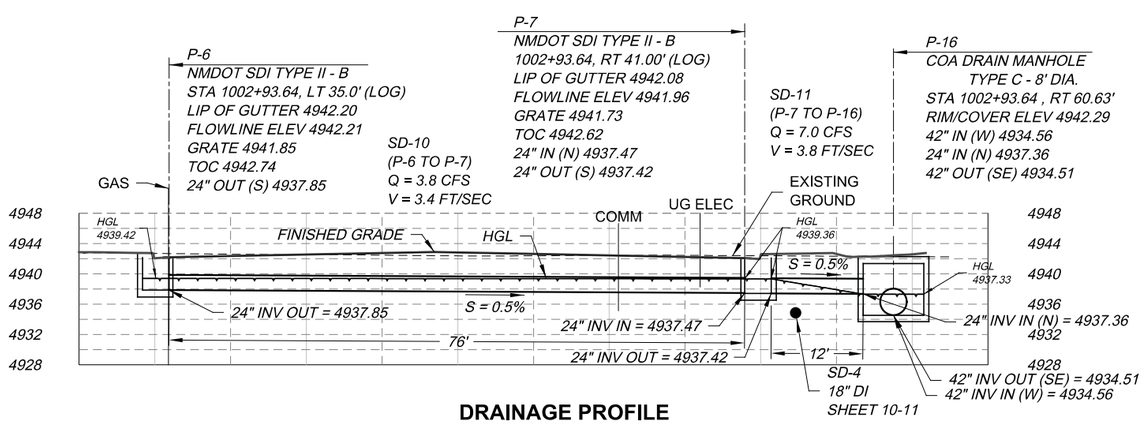

DRAINAGE PROFILE
P-6 TO P-16

STA 1002+93.64, LT 35.00' TO STA 1002+93.64, RT 60.63'
(SEE SHEET 10-2)

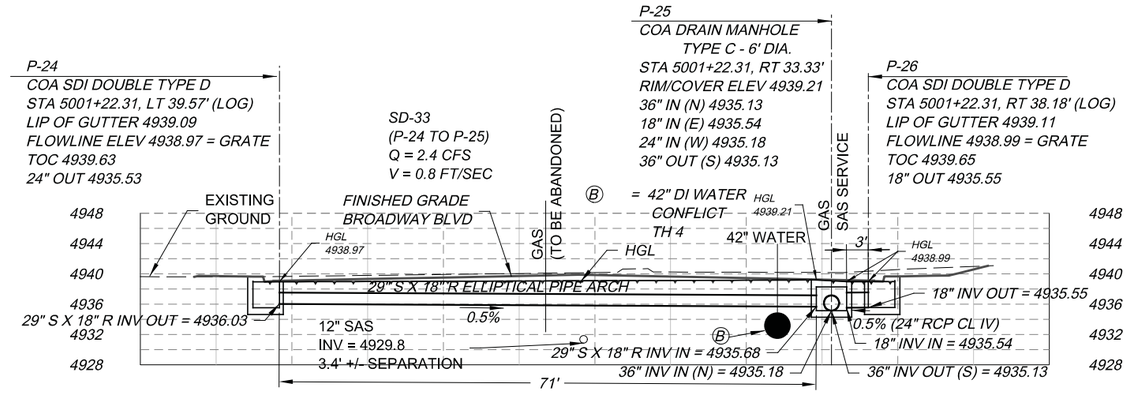

DRAINAGE PROFILE
P-24 TO P-26

STA 5001+22.31, LT 39.57' TO STA 5001+22.31, RT 38.18'
(SEE SHEET 10-6)

SD-34
(P-25 TO P-26)
Q = 1.7 CFS
V = 1.0 FT/SEC

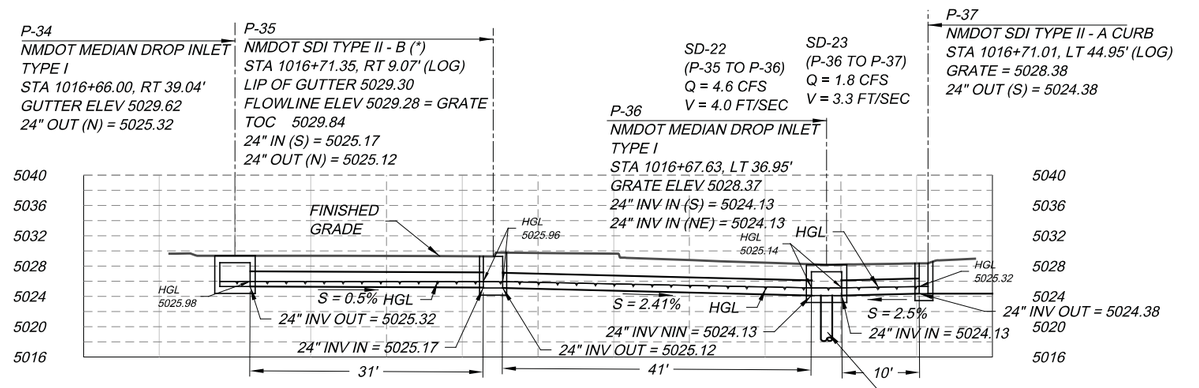

DRAINAGE PROFILE
P-34 TO P-37

STA 1016+62.12, RT 39.04' TO STA 1016+71.01, LT 44.95'
(SEE SHEET 10-4)

SD-21A
(P-34 TO P-35)
Q = 0.9 CFS
V 1.3 FT/SEC

18" DUCTILE IRON PIPE
SEE DROP INLET DETAIL SHEET 10-19

SD-24
(P-36 TO P-36A)
Q = 6.4 CFS
(SEE SHEET 10-13)

* = MODIFIED TO MATCH TYPE 'D' CURB & GUTTER

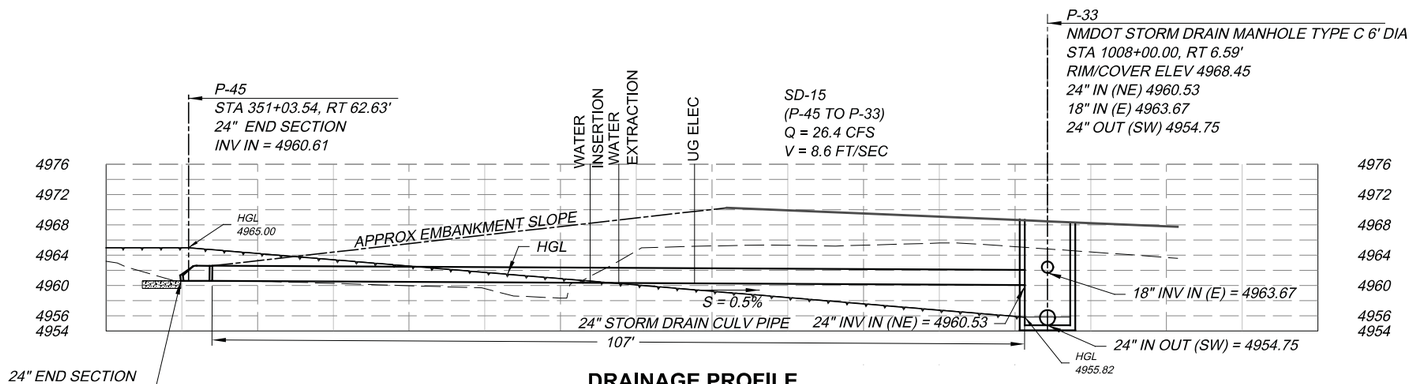

DRAINAGE PROFILE
P-45 TO P-33

STA 351+03.54, RT 62.63' TO STA 1008+00.00, RT 6.59'
(SEE SHEET 10-2)

SCALE: 1" = 20' (HORIZONTAL & VERTICAL)

DESIGN REVIEW COMMITTEE

CITY ENGINEER APPROVAL

NO.	DESCRIPTION	DATE	BY
4			
3			
2			
1			

REVISIONS (OR CHANGE NOTICES)

BERNALILLO COUNTY
PUBLIC WORKS DIVISION
TECHNICAL SERVICES DEPARTMENT

SUNPORT BOULEVARD EXTENSION

DRAINAGE PROFILES

KEVIN W. EADES
NEW MEXICO
14481
REGISTERED PROFESSIONAL ENGINEER
7/10/2020

DESIGNED BY: designer PHONE: phone EMAIL: email

DESIGN REVIEW COMMITTEE	CITY ENGINEER APPROVAL

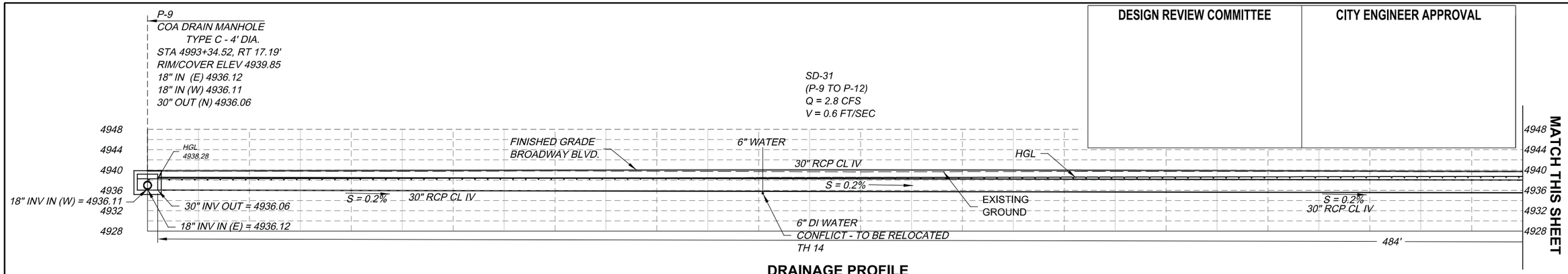

DRAINAGE PROFILE
P-9 TO P-17B

STA 4993+34.52, RT 17.19' TO STA 1003+02.2, RT 160.1'
(SEE SHEET 10-1 & 10-2)

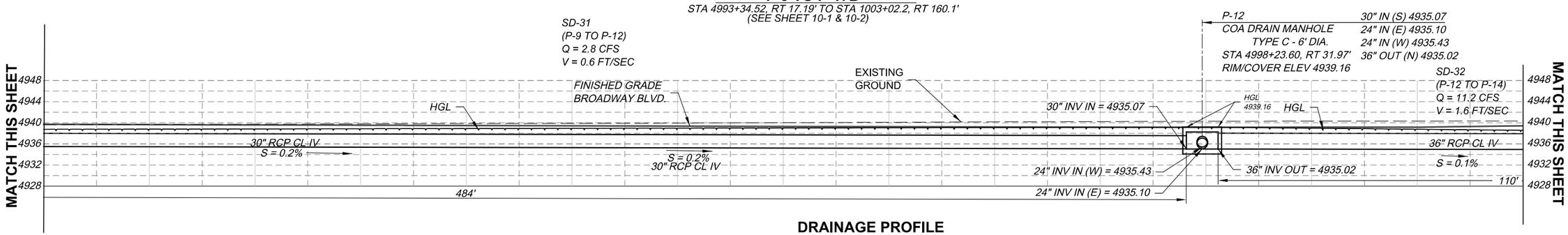

DRAINAGE PROFILE
P-9 TO P-17B

STA 4993+34.52, RT 17.19' TO STA 1003+02.2, RT 160.1'
(SEE SHEET 10-1 & 10-2)

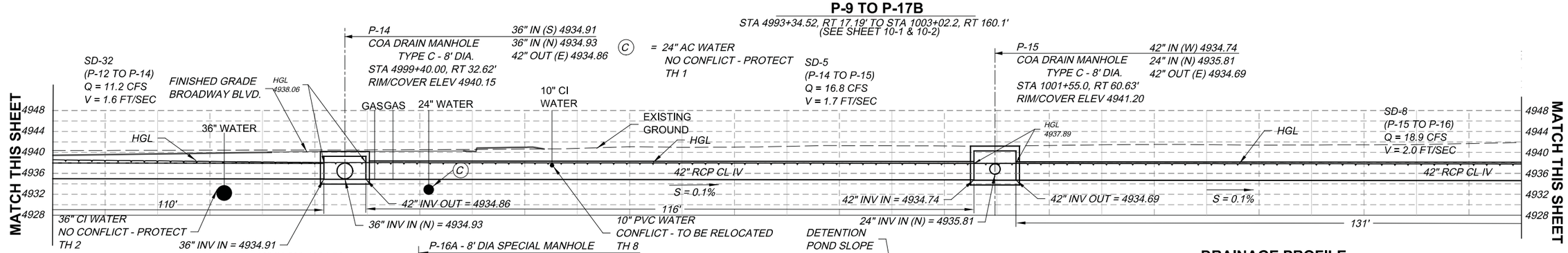

DRAINAGE PROFILE
P-9 TO P-17B

STA 4993+34.52, RT 17.19' TO STA 1003+02.2, RT 160.1'
(SEE SHEET 10-1 & 10-2)

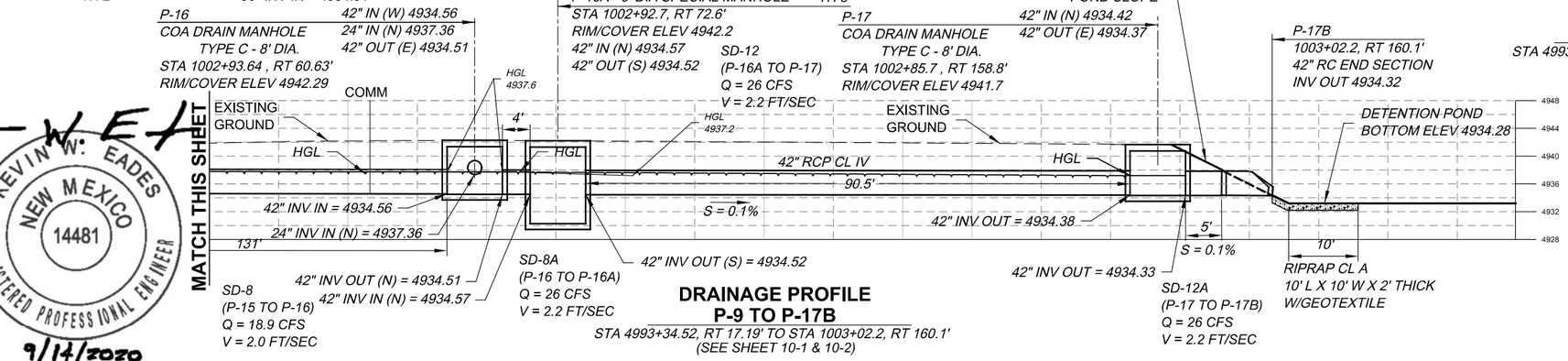

DRAINAGE PROFILE
P-9 TO P-17B

STA 4993+34.52, RT 17.19' TO STA 1003+02.2, RT 160.1'
(SEE SHEET 10-1 & 10-2)

SCALE: 1" = 20' (HORIZONTAL & VERTICAL)

NO.	DESCRIPTION	DATE	BY
4			
3			
2			
1			

REVISIONS (OR CHANGE NOTICES)

BERNALILLO COUNTY
PUBLIC WORKS DIVISION
TECHNICAL SERVICES DEPARTMENT

SUNPORT BOULEVARD EXTENSION

DRAINAGE PROFILES

KEVIN W. EADES
NEW MEXICO
14481
REGISTERED PROFESSIONAL ENGINEER
9/14/2020

DESIGNED BY: designer
PHONE: phone
EMAIL: email

SEE NOTE TO CONTRACTOR FOR SUPPLEMENTAL SURVEY INFORMATION FOR EXISTING DMH (P-20) SHEET 10-1 AND ADDITIONAL EXISTING CULVERT PIPE INVERTS.

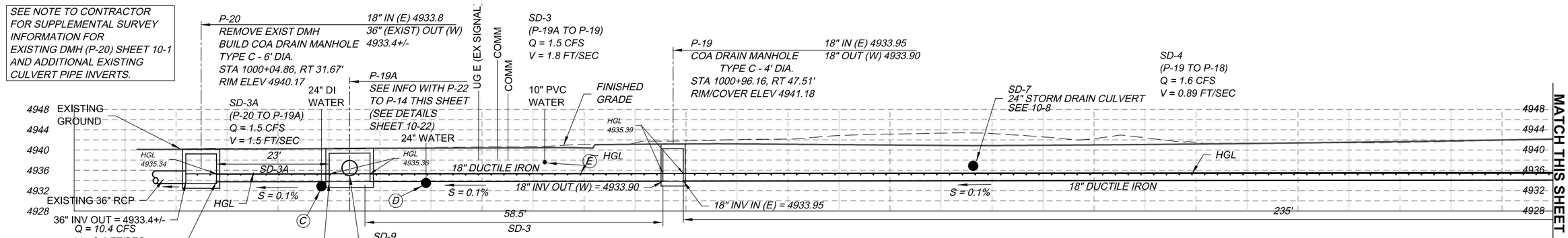

DRAINAGE PROFILE
P-17A TO P-20

STA 1003+35.02, RT 87.0' TO STA 1000+04.86, RT 31.67'
(SEE SHEET 10-1 & 10-2)

(C) = 24" DI WATER CONFLICT - TO BE RELOCATED TH 6

(D) = 24" CONC WATER CONFLICT - TO BE RELOCATED TH 11

(E) = 10" PVC WATER NO CONFLICT - PROTECT TH 12

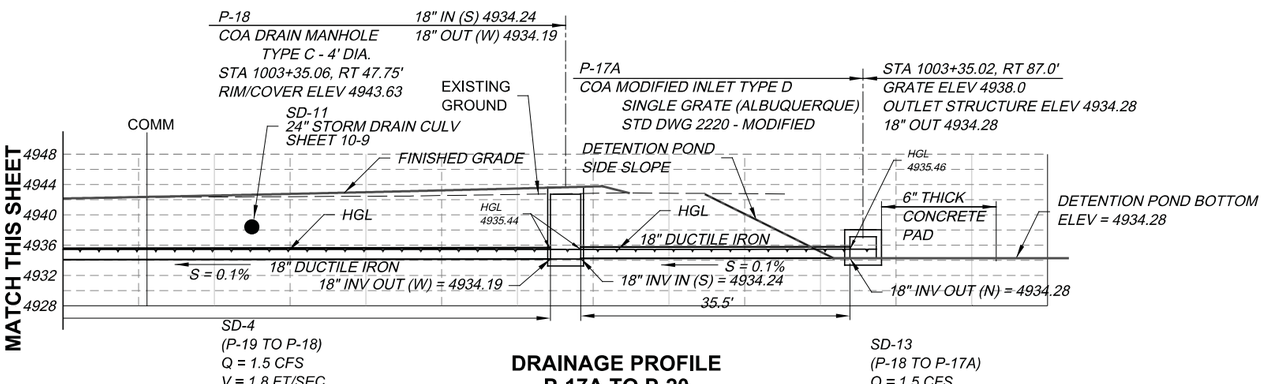

DRAINAGE PROFILE
P-17A TO P-20

STA 1003+35.02, RT 87.0' TO STA 1000+04.86, RT 31.67'
(SEE SHEET 10-1 & 10-2)

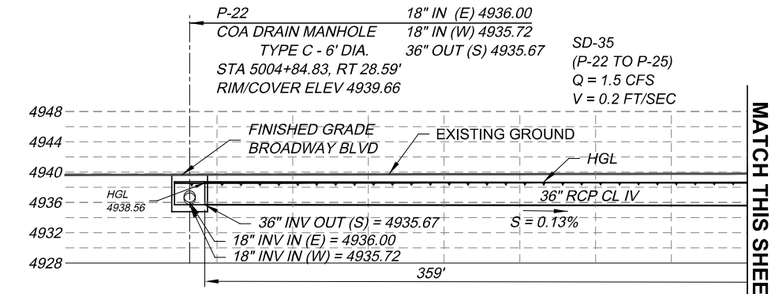

DRAINAGE PROFILE
P-22 TO P-14

STA 5004+84.83, RT 28.50' TO STA 4999+40.00, RT 32.62'
(SEE SHEET 10-1, 10-6 & 10-7)

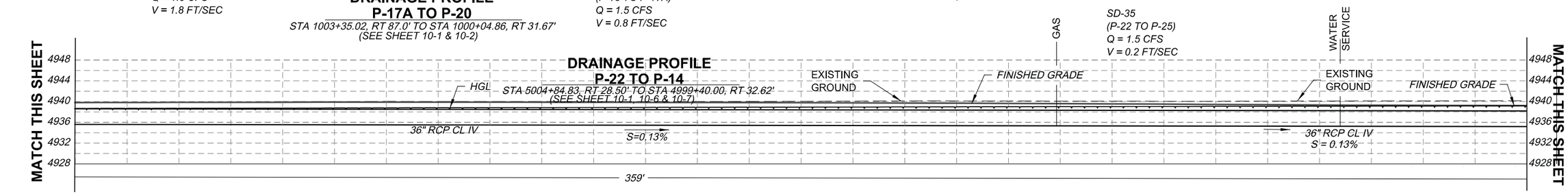

DRAINAGE PROFILE
P-22 TO P-14

STA 5004+84.83, RT 28.50' TO STA 4999+40.00, RT 32.62'
(SEE SHEET 10-1, 10-6 & 10-7)

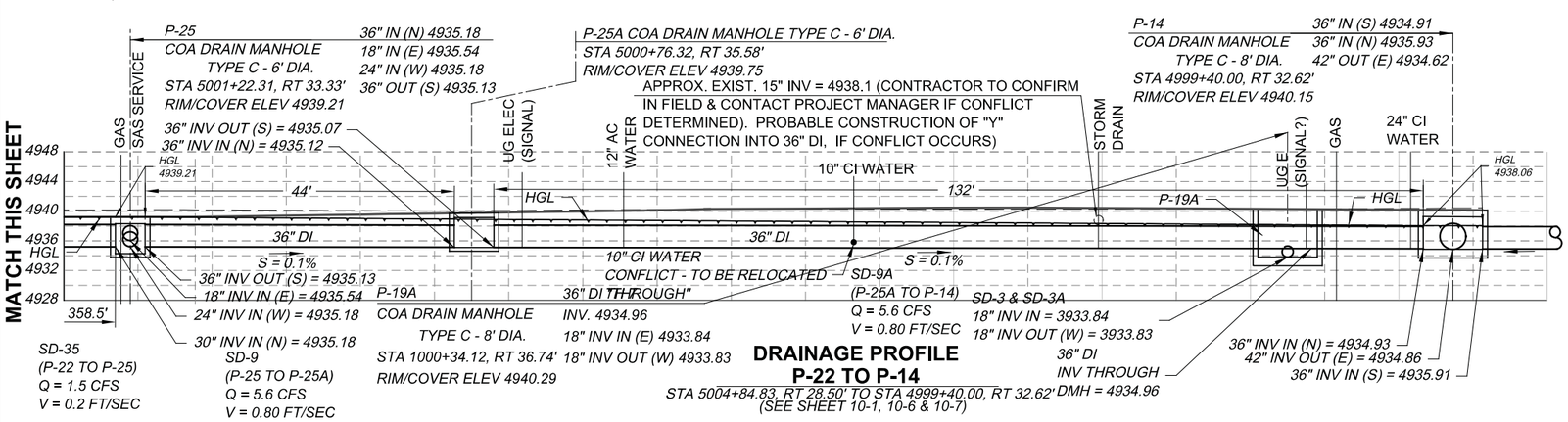

DRAINAGE PROFILE
P-22 TO P-14

STA 5004+84.83, RT 28.50' TO STA 4999+40.00, RT 32.62'
(SEE SHEET 10-1, 10-6 & 10-7)

KEVIN W. EADES
NEW MEXICO
14481
REGISTERED PROFESSIONAL ENGINEER
7/10/2020

DESIGN REVIEW COMMITTEE

CITY ENGINEER APPROVAL

SCALE: 1" = 20' (HORIZONTAL & VERTICAL)

NO.	DESCRIPTION	DATE	BY
4			
3			
2			
1			

REVISIONS (OR CHANGE NOTICES)

BERNALILLO COUNTY
PUBLIC WORKS DIVISION
TECHNICAL SERVICES DEPARTMENT

SUNPORT BOULEVARD EXTENSION

DRAINAGE PROFILES

DESIGNED BY: designer PHONE: phone EMAIL: email

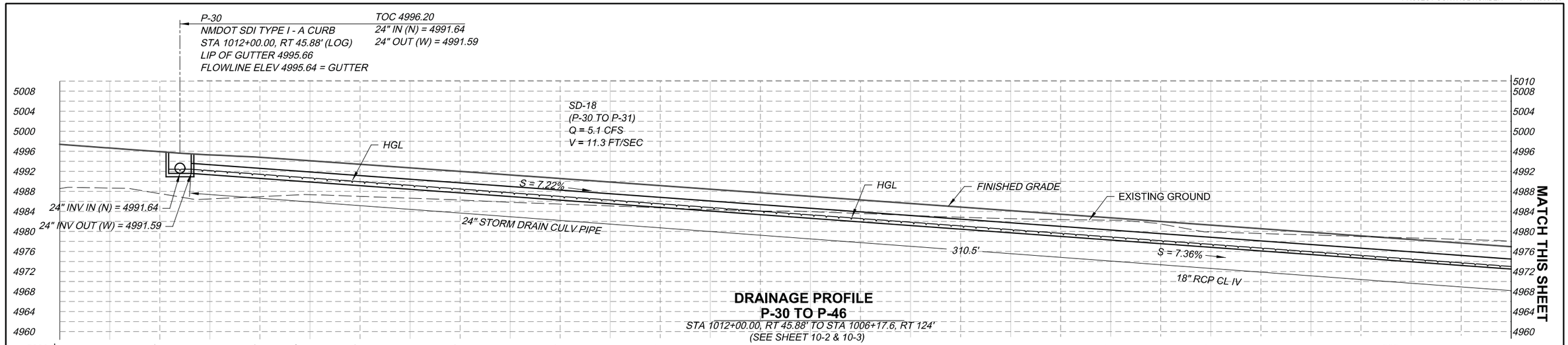

DRAINAGE PROFILE
P-30 TO P-46
STA 1012+00.00, RT 45.88' TO STA 1006+17.6, RT 124'
(SEE SHEET 10-2 & 10-3)

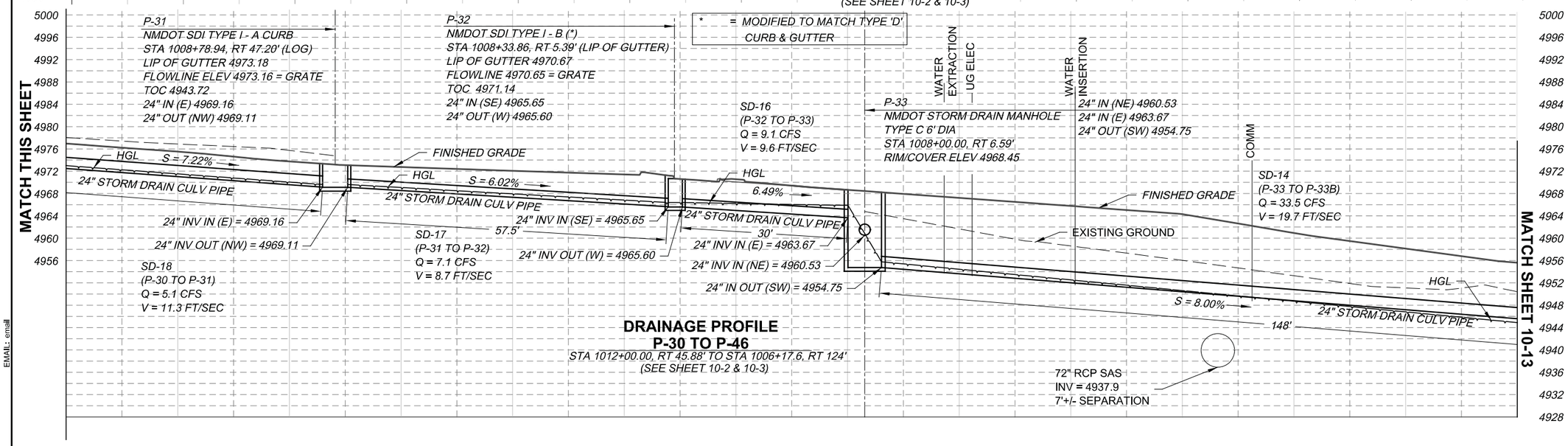

DRAINAGE PROFILE
P-30 TO P-46
STA 1012+00.00, RT 45.88' TO STA 1006+17.6, RT 124'
(SEE SHEET 10-2 & 10-3)

DRAINAGE PROFILE
P-30 TO P-46
STA 1012+00.00, RT 45.88' TO STA 1006+17.6, RT 124'

KEVIN W. EADES
NEW MEXICO
14481
REGISTERED PROFESSIONAL ENGINEER
7/10/2020

SCALE: 1" = 20' (HORIZONTAL & VERTICAL)

DESIGN REVIEW COMMITTEE	CITY ENGINEER APPROVAL

NO.	DESCRIPTION	DATE	BY
4			
3			
2			
1			

REVISIONS (OR CHANGE NOTICES)

BERNALILLO COUNTY
PUBLIC WORKS DIVISION
TECHNICAL SERVICES DEPARTMENT

SUNPORT BOULEVARD EXTENSION

DRAINAGE PROFILES

DESIGNED BY: designer PHONE: phone EMAIL: email

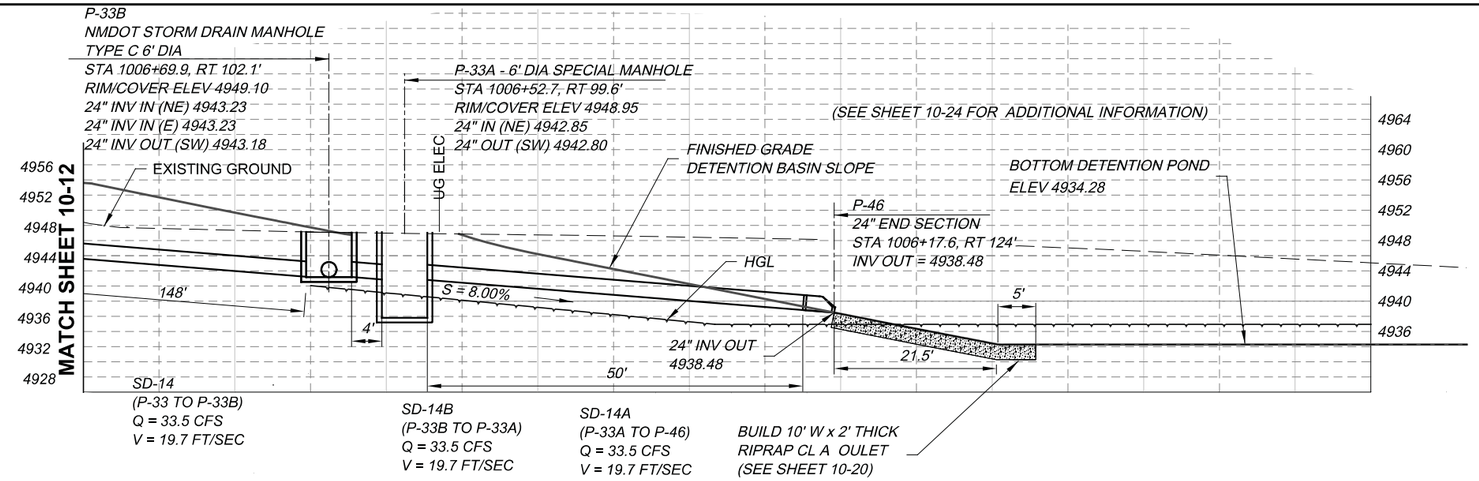

DRAINAGE PROFILE
P-30 TO P-46

STA 1012+00.00, RT 45.88' TO STA 1006+17.6, RT 124'
(SEE SHEET 10-2 & 10-3)

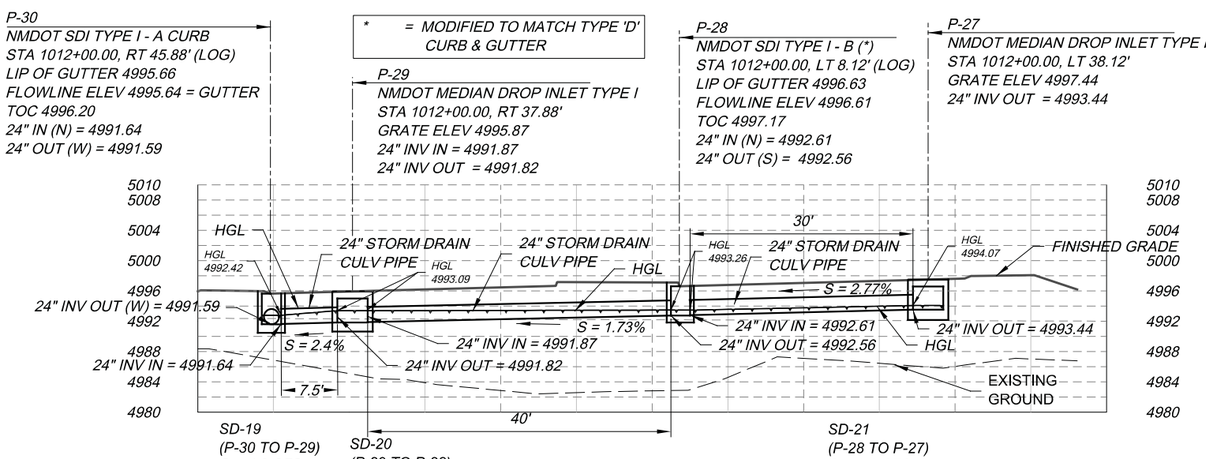

DRAINAGE PROFILE
P-27 TO P-30

STA 1012+00.00, LT 38.12' TO STA 1012+00.00, RT 45.88'
(SEE SHEET 10-3)

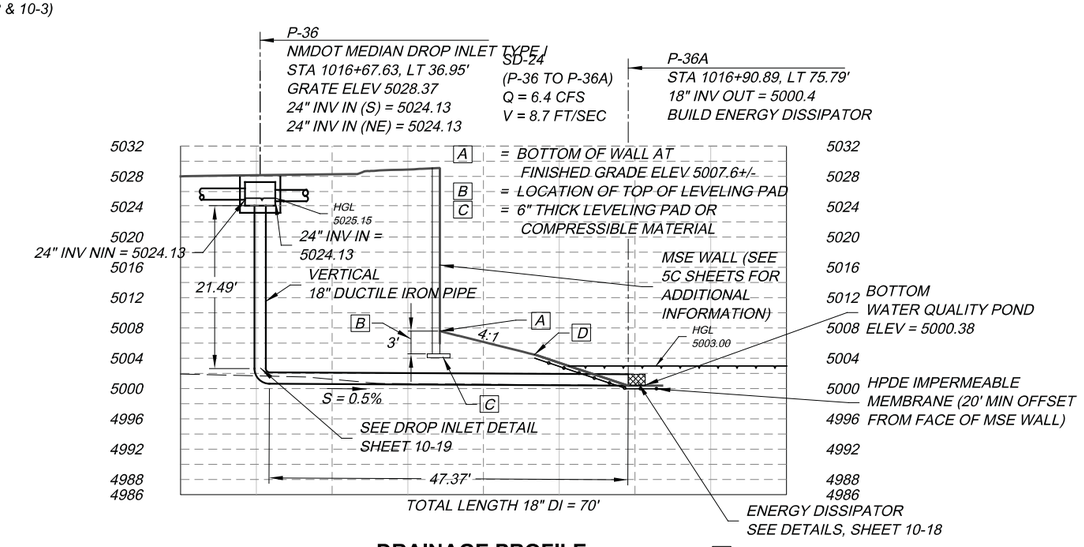

DRAINAGE PROFILE
P-36 TO P-36A

STA 1016+63.55, LT 36.95' TO STA 1016+90.89, LT 75.79'
(SEE SHEET 10-4)

SCALE: 1" = 20' (HORIZONTAL & VERTICAL)

DESIGN REVIEW COMMITTEE	CITY ENGINEER APPROVAL

KEVIN W. EADES
NEW MEXICO
14481
REGISTERED PROFESSIONAL ENGINEER
9/14/2020

NO.	DESCRIPTION	DATE	BY
4			
3			
2			
1			

REVISIONS (OR CHANGE NOTICES)

BERNALILLO COUNTY
PUBLIC WORKS DIVISION
TECHNICAL SERVICES DEPARTMENT

SUNPORT BOULEVARD EXTENSION

DRAINAGE PROFILES

DESIGNED BY: designer PHONE: phone EMAIL: email

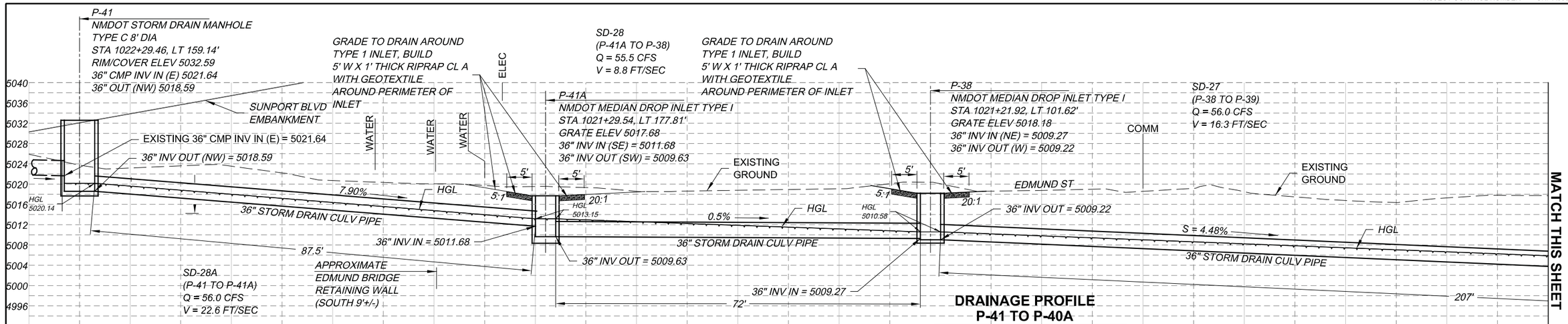

DRAINAGE PROFILE
P-41 TO P-40A

STA 1022+29.46, LT 159.14' TO STA 1016+53.02, LT 102.29'
(SEE SHEET 10-4)

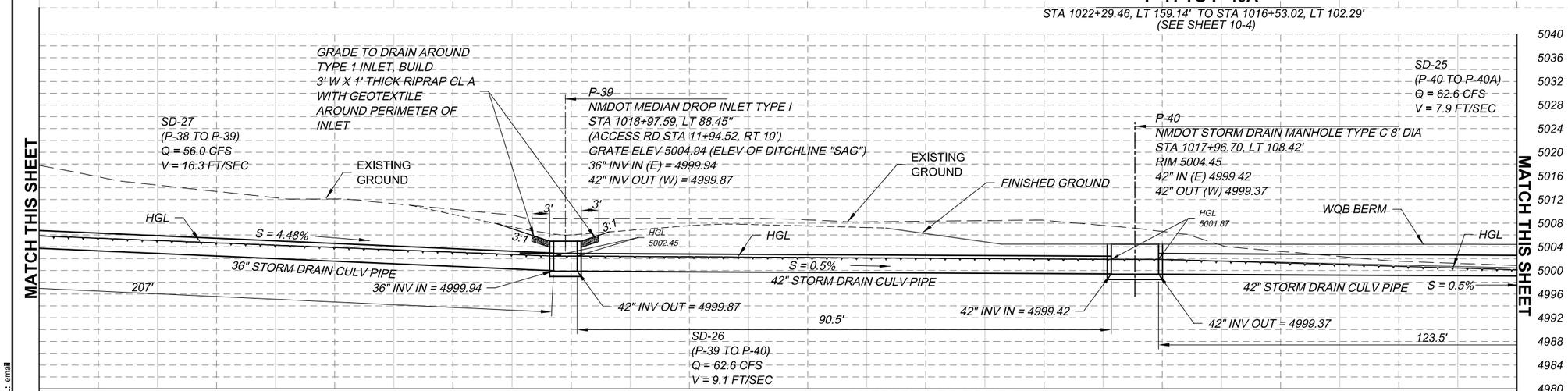

DRAINAGE PROFILE
P-41 TO P-40A

STA 1022+29.46, LT 159.14' TO STA 1016+53.02, LT 102.29'
(SEE SHEET 10-4)

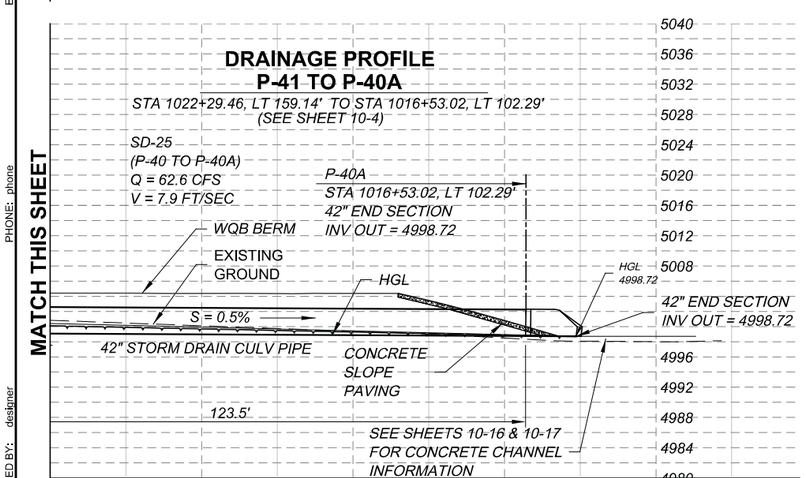

KEVIN W. EADES
NEW MEXICO
14481
REGISTERED PROFESSIONAL ENGINEER
7/10/2020

SCALE: 1" = 20' (HORIZONTAL & VERTICAL)

DESIGN REVIEW COMMITTEE	CITY ENGINEER APPROVAL

NO.	DESCRIPTION	DATE	BY
4			
3			
2			
1			

REVISIONS (OR CHANGE NOTICES)

BERNALILLO COUNTY
PUBLIC WORKS DIVISION
TECHNICAL SERVICES DEPARTMENT

SUNPORT BOULEVARD EXTENSION

DRAINAGE PROFILES

DESIGNED BY: designer PHONE: phone EMAIL: email

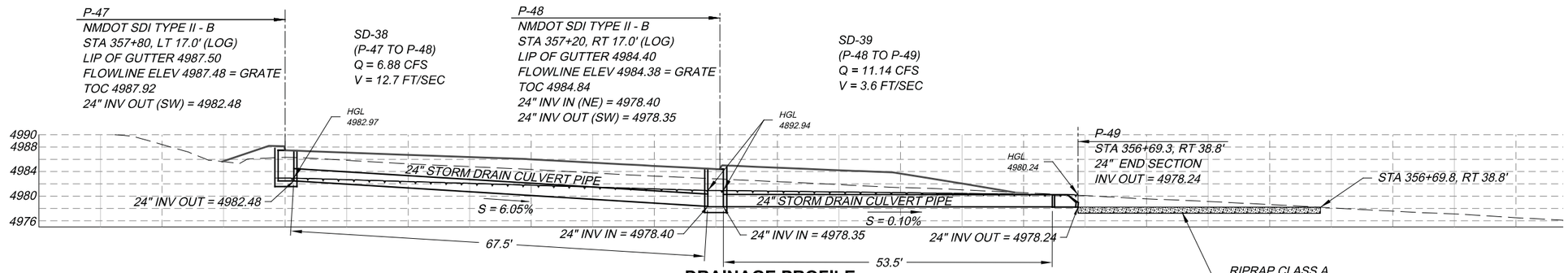

DRAINAGE PROFILE
P-47 TO P-49
STA 351+80, LT 17.0' TO STA 356+69.3, RT 38.8'
(SEE SHEET 10-3)

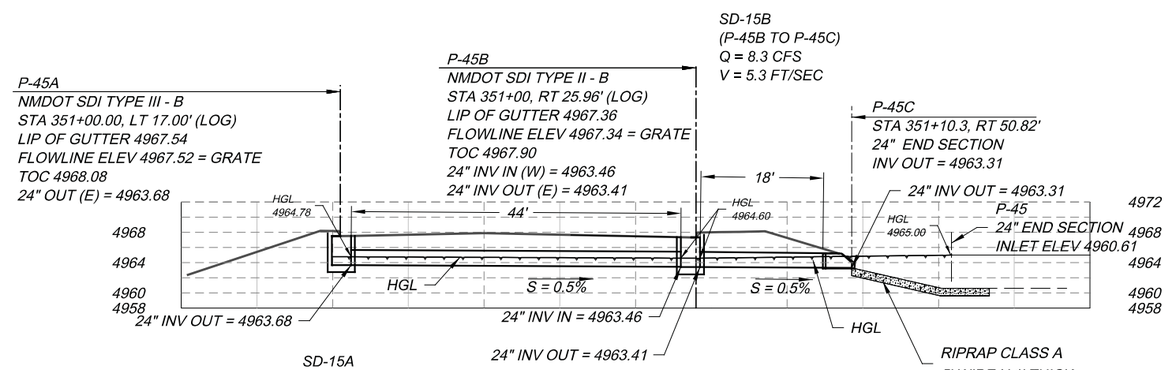

SD-15A
(P-45A TO P-45B)
Q = 6.4 CFS
V = 4.6 FT/SEC

DRAINAGE PROFILE
P-45A TO P-45C
STA 351+00, LT 17.00" TO STA 351+10.3, RT 50.82'
(SEE SHEET 10-2)

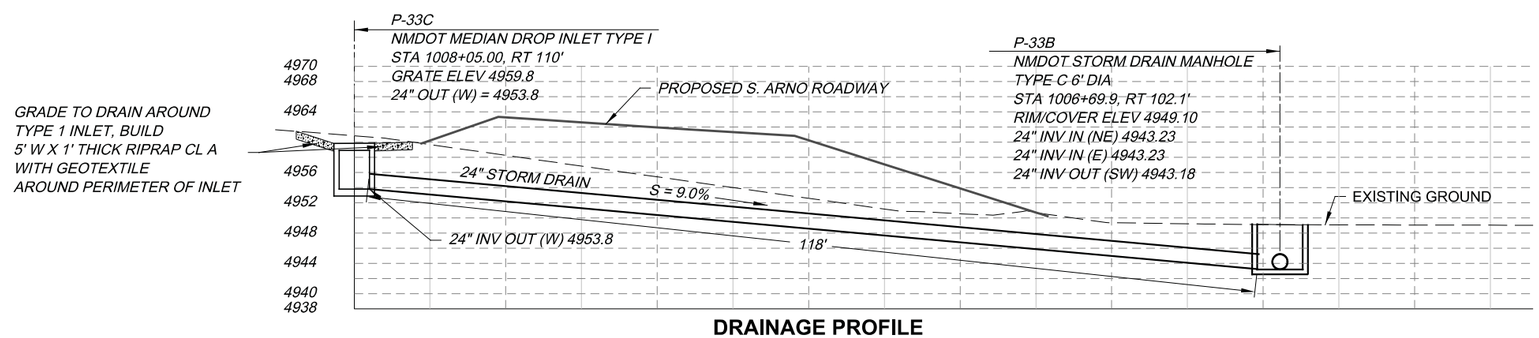

DRAINAGE PROFILE
P-33C TO P-33B
STA 1008+05.00, RT 110' TO STA 1006+69.9, RT 102.1'

SCALE: 1" = 20' (HORIZONTAL & VERTICAL)

CITY ENGINEER APPROVAL

DESIGN REVIEW COMMITTEE

NO.	DESCRIPTION	DATE	BY
4			
3			
2			
1			

REVISIONS (OR CHANGE NOTICES)

BERNALILLO COUNTY
PUBLIC WORKS DIVISION
TECHNICAL SERVICES DEPARTMENT

SUNPORT BOULEVARD EXTENSION

DRAINAGE PROFILES

EMAIL: email
PHONE: phone
DESIGNED BY: designer

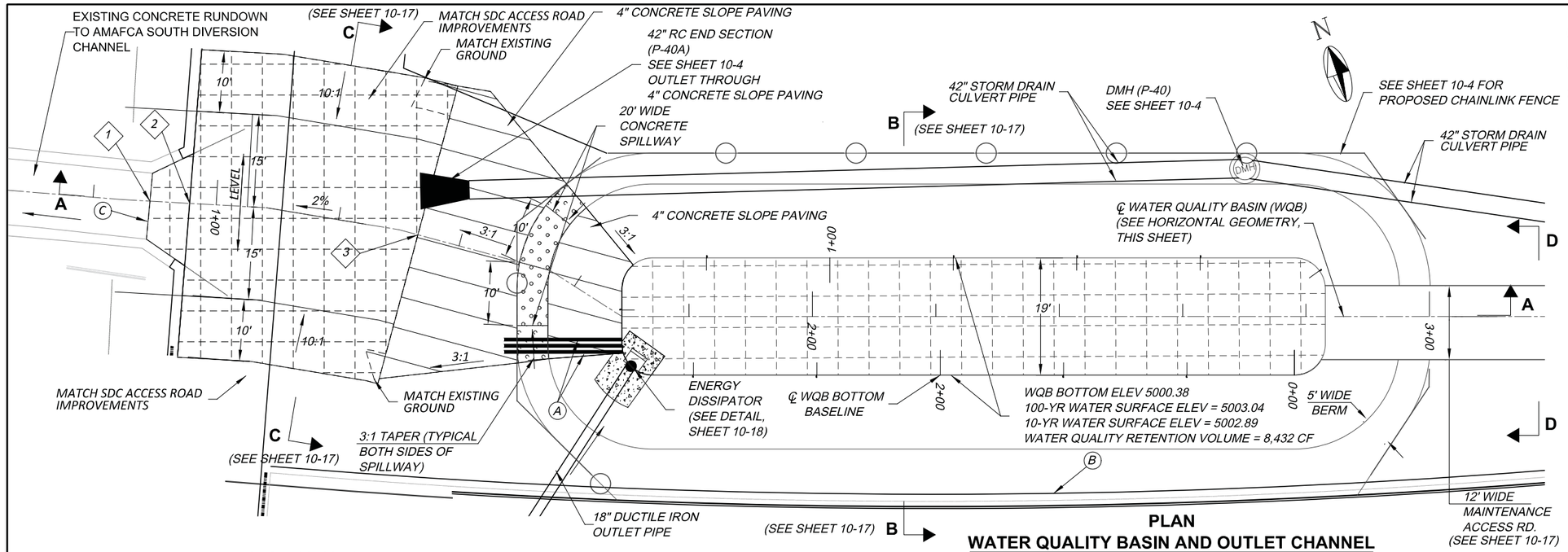

PLAN
WATER QUALITY BASIN AND OUTLET CHANNEL

SCALE: 1" = 20'

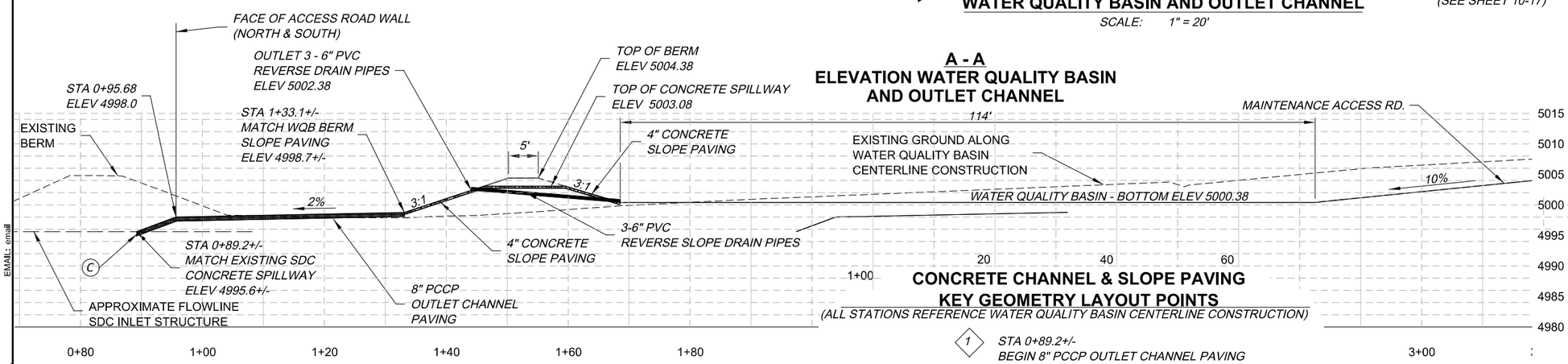

A - A
ELEVATION WATER QUALITY BASIN AND OUTLET CHANNEL

CONCRETE CHANNEL & SLOPE PAVING KEY GEOMETRY LAYOUT POINTS

(ALL STATIONS REFERENCE WATER QUALITY BASIN CENTERLINE CONSTRUCTION)

1. STA 0+89.2+/- BEGIN 8" PCCP OUTLET CHANNEL PAVING MATCH EXISTING SDC CONCRETE SPILLWAY ELEV 4995.6+/-
2. STA 0+95.68 MATCH FACE OF SDC ACCESS ROAD WALL BEGIN 2% PCCP OUTLET CHANNEL ELEV 4998.0
3. STA 1+33.1+/- END 8" PCCP OUTLET CHANNEL PAVING MATCH WQB BERM SLOPE PAVING ELEV 4998.7+/-

KEY NOTES

(A) = 3 - 6" REVERSE SLOPE DRAIN PIPES.

(B) = FACE OF MSE RETAINING WALL (SEE 5C SHEETS FOR ADDITIONAL INFORMATION)

(C) = DRILL AND EPOXY #4 DOWELS AT 18"O.C. AT THE INTERFACE BETWEEN THE DROP STRUCTURE APRON AND THE PCCP. DOWELS SHALL BE 18" IN LENGTH AND SHALL BE EMBEDDED VIA DRILL/EPOXY A MINIMUM OF 6"INTO THE EXISTING CONCRETE APRON. DOWELS SHALL BE PLACED SO THAT THEY ARE CENTERED IN THE PCCP. THE #4 DOWEL INTERFACE REINFORCING SHALL BE INCIDENTAL TO THE PCCP BID ITEM.

WATER QUALITY BASIN HORIZONTAL GEOMETRY

	STATION	NORTHING	EASTING
POB	0+00.00	1473579.327	1523737.943
PI	0+84.41	1473545.843	1523815.427
Tangent Direction:	S 66°37'43.4" E		
Tangent Length:	84.41'		
PI	0+84.41	1473545.843	1523815.427
PI	1+08.17	1473536.970	1523837.467
Tangent Direction:	S 68°04'11.9" E		
Tangent Length:	23.76'		
PI	1+08.17	1473536.970	1523837.467
PI	1+29.95	1473526.696	1523856.668
Tangent Direction:	S 61°51'03.0" E		
Tangent Length:	21.78'		
PI	1+29.95	1473526.696	1523856.668
PI	1+55.20	1473512.663	1523877.664
Tangent Direction:	S 56°14'32.8" E		
Tangent Length:	25.25'		
PI	1+55.20	1473512.663	1523877.664
PI	1+69.13	1473501.794	1523886.372
Tangent Direction:	S 38°42'00.7" E		
Tangent Length:	13.93'		
PI	1+69.13	1473501.794	1523886.372
POE	3+92.96	1473430.036	1524098.392
Tangent Direction:	S 71°18'05.7" E		
Tangent Length:	223.84'		

NOTES:

1. THE WATER QUALITY BASIN IS TO BE CONSTRUCTED WITH 3:1 SIDE SLOPES FROM THE BOTTOM OF THE BASIN AT ELEV 5000.38 TO THE TOP OF THE WQB BERM AT ELEV 5004.38 USING THE WQB BOTTOM BASELINE ALIGNMENT.
2. CONSTRUCTION OF THE WATER QUALITY BASIN AND FINAL GRADING PAID UNDER ITEM 203000 - UNCLASSIFIED EXCAVATION.
3. 8" PCCP PAID UNDER ITEM 450080 - CONCRETE PAVEMENT-8". (PER NMDOT STD DWG 450-01-1/2 & 2/2)
4. 4" CONCRETE SLOPE PAVING PAID UNDER ITEM 511000- STRUCTURAL CONCRETE CL A (PER NMDOT STD DWG 511-05-1/1), WELDED WIRE FABRIC INCIDENTAL TO ITEM 511000.

NOTE:
SEE SHEET 10-17 FOR WQB BOTTOM BASELINE HORIZONANTAL ALIGNMENT INFORMATION, AND MAINTENANCE ACCESS ROAD HORIZONTAL AND VERTICAL ALIGNMENT INFORMATION.

PLAN LEGEND

= 8" PCCP CONCRETE CHANNEL

= 4" CONCRETE SLOPE PAVING (MATCH 8" PCCP CONCRETE CHANNEL)

= CONCRETE SPILLWAY WITH 3:1 SIDESLOPES TO MATCH TOP OF WQB BERM. (CONSTRUCTED WITH 4" CONCRETE SLOPE PAVING)

DESIGN REVIEW COMMITTEE	CITY ENGINEER APPROVAL

KEVIN W. EADES
NEW MEXICO
14481
REGISTERED PROFESSIONAL ENGINEER
9/14/2020

NO.	DESCRIPTION	DATE	BY
4			
3			
2			
1			

REVISIONS (OR CHANGE NOTICES)

BERNALILLO COUNTY
PUBLIC WORKS DIVISION
TECHNICAL SERVICES DEPARTMENT

SUNPORT BOULEVARD EXTENSION
WATER QUALITY BASIN DETAILS

EMAIL: email
PHONE: phone
DESIGNED BY: designer

WATER QUALITY BASIN BOTTOM BASELINE HORIZONTAL GEOMETRY

	STATION	NORTHING	EASTING
CURVE #1			
PC	0+00.00	1473457.852	1523986.573
PI	0+05.00	1473456.249	1523991.309
CC		1473462.588	1523988.176
PT	0+07.85	1473460.985	1523992.912

Radius: 5.00'
Delta: 90°00'00.0" Left
Length: 7.85'
Tangent: 5.00'
Chord: 7.07'
Middle Ordinate: 1.46'
External: 2.07'
Tangent (Back): S 71°18'05.7" E
Tangent (Ahead): N 18°41'54.3" E

PT	0+07.85	1473460.985	1523992.912
PC	0+16.85	1473469.510	1523995.797

Tangent Direction: N 18°41'54.3" E
Tangent Length: 9.00'

	STATION	NORTHING	EASTING
CURVE #2			
PC	0+16.85	1473469.510	1523995.797
PI	0+21.85	1473474.246	1523997.400
CC		1473471.113	1523991.061
PT	0+24.71	1473475.849	1523992.664

Radius: 5.00'
Delta: 90°00'00.0" Left
Length: 7.85'
Tangent: 5.00'
Chord: 7.07'
Middle Ordinate: 1.46'
External: 2.07'
Tangent (Back): N 18°41'54.3" E
Tangent (Ahead): N 71°18'05.7" W

PT	0+24.71	1473475.849	1523992.664
PC	1+28.71	1473509.190	1523894.153

Tangent Direction: N 71°18'05.7" W
Tangent Length: 104.00'

	STATION	NORTHING	EASTING
CURVE #3			
PC	1+28.71	1473509.190	1523894.153
PI	1+33.71	1473510.793	1523889.417
CC		1473504.454	1523892.550
PT	1+36.56	1473506.057	1523887.814

Radius: 5.00'
Delta: 90°00'00.0" Left
Length: 7.85'
Tangent: 5.00'
Chord: 7.07'
Middle Ordinate: 1.46'
External: 2.07'
Tangent (Back): N 71°18'05.7" W
Tangent (Ahead): S 18°41'54.3" W

PT	1+36.56	1473506.057	1523887.814
PC	1+45.56	1473497.532	1523884.929

Tangent Direction: S 18°41'54.3" W
Tangent Length: 9.00'

	STATION	NORTHING	EASTING
CURVE #4			
PC	1+45.56	1473497.532	1523884.929
PI	1+50.56	1473492.796	1523883.326
CC		1473495.929	1523889.665
PT	1+53.42	1473491.193	1523888.062

Radius: 5.00'
Length: 7.85'
Tangent: 5.00'
Chord: 7.07'
Middle Ordinate: 1.46'
External: 2.07'
Tangent (Back): S 18°41'54.3" W
Tangent (Ahead): S 71°18'05.7" E

PT	1+53.42	1473491.193	1523888.062
POE	2+57.42	1473457.852	1523986.573

Tangent Direction: S 71°18'05.7" E
Tangent Length: 104.00'

WQB MAINTENANCE ACCESS RD HORIZONTAL GEOMETRY

	STATION	NORTHING	EASTING
POB	10+00.00	1473405.215	1524262.967
PC	11+24.52	1473418.722	1524139.180

Tangent Direction: N 83°46'22.1" W
Tangent Length: 124.52'

CURVE #1			
PC	11+24.52	1473418.722	1524139.180
PI	11+35.45	1473419.907	1524128.318
CC		1473518.132	1524150.027
PT	11+46.29	1473423.410	1524117.968

Radius: 100.00'
Delta: 12°28'16.4" Right
Length: 21.77'
Tangent: 10.93'
Chord: 21.72'
Middle Ordinate: 0.59'
External: 0.60'
Tangent (Back): N 83°46'22.1" W
Tangent (Ahead): N 71°18'05.7" W

PT	11+46.29	1473423.410	1524117.968
POE	12+87.79	1473468.774	1523983.934

Tangent Direction: N 71°18'05.7" W
Tangent Length: 141.50'

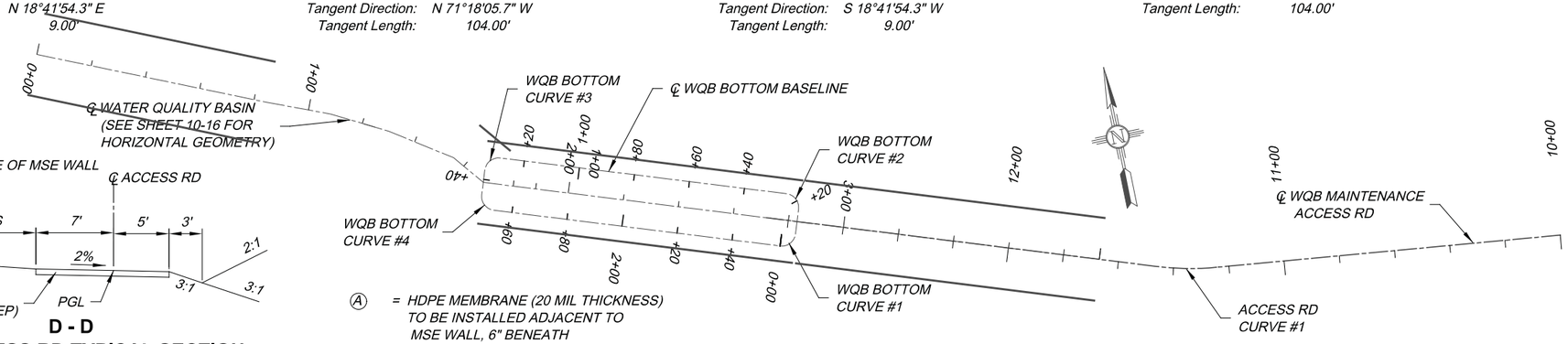

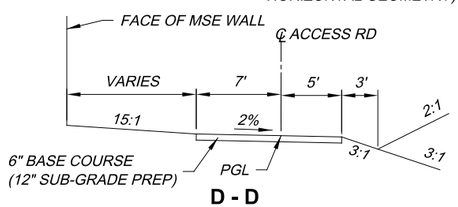

D - D
WQB ACCESS RD TYPICAL SECTION
NOT TO SCALE
(SEE SHEET 10-16)

Ⓐ = HDPE MEMBRANE (20 MIL THICKNESS) TO BE INSTALLED ADJACENT TO MSE WALL, 6" BENEATH TOP OF WQB SIDE SLOPE, AND BOTTOM, TO A DISTANCE OF 20-FT OFFSET FROM THE FACE OF MSE WALL.

HDPE MEMBRANE INCIDENTAL TO ITEM 203000 - UNCLASSIFIED EXCAVATION (CONSTRUCTION AND GRADING OF WATER QUALITY BASIN.)

Ⓐ LOCATIONS, AS NOTED, SEE SECTION B-B, THIS SHEET

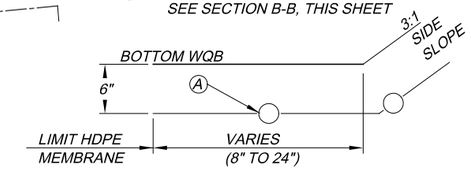

DETAIL "A"
NOT TO SCALE

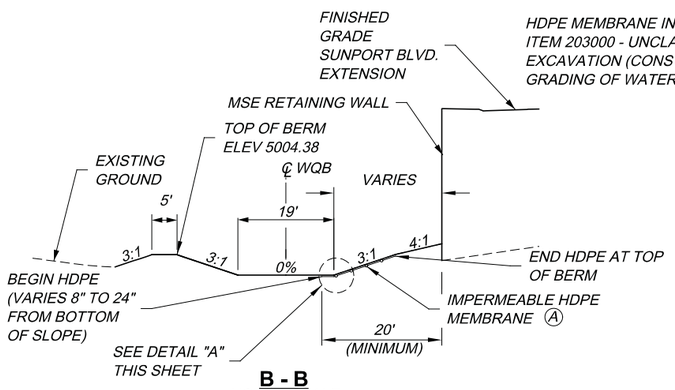

B - B
NOT TO SCALE
(SEE SHEET 10-16)

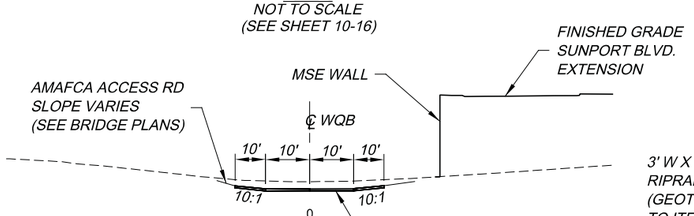

C - C
NOT TO SCALE
(SEE SHEET 10-16)

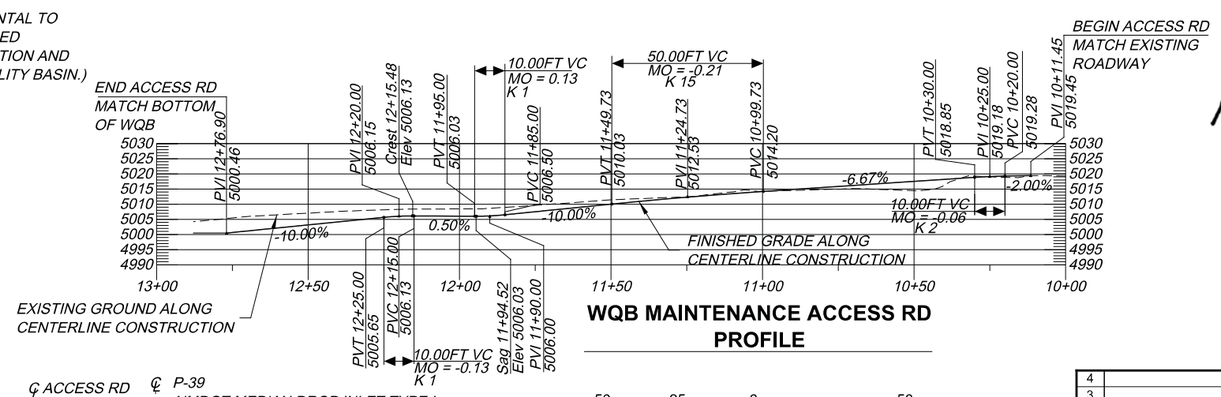

WQB MAINTENANCE ACCESS RD PROFILE

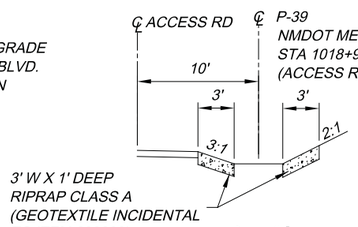

DETAIL
P-39 PLACEMENT
NOT TO SCALE
(SEE SHEET 10-4)

50 25 0 50
1" = 50'

DESIGN REVIEW COMMITTEE	CITY ENGINEER APPROVAL

NO.	DESCRIPTION	DATE	BY
4			
3			
2			
1			

REVISIONS (OR CHANGE NOTICES)

BERNALILLO COUNTY
PUBLIC WORKS DIVISION
TECHNICAL SERVICES DEPARTMENT

SUNPORT BOULEVARD EXTENSION
WATER QUALITY BASIN BOTTOM AND MAINTENANCE ACCESS ROAD ALIGNMENTS AND MISCELLANEOUS DETAILS

KEVIN W. EADES
NEW MEXICO
14481
REGISTERED PROFESSIONAL ENGINEER
7/10/2020

EMAIL:
PHONE:
DESIGNED BY:

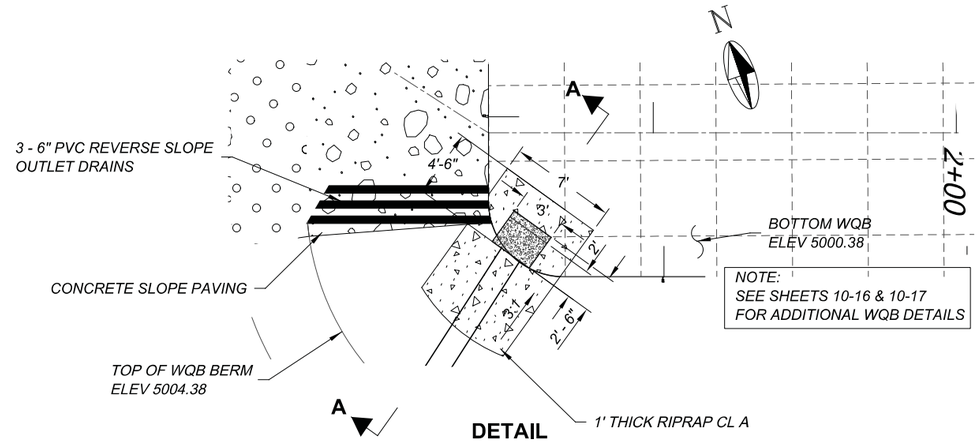

NOTE:
SEE SHEETS 10-16 & 10-17
FOR ADDITIONAL WQB DETAILS

DETAIL
WATER QUALITY BASIN
ENERGY DISSIPATOR SYSTEM
NOT TO SCALE

NOTE:
SEE SHEET 10-13 & 5C SHEETS
FOR ADDITIONAL INFORMATION
REGARDING MSE WALL.

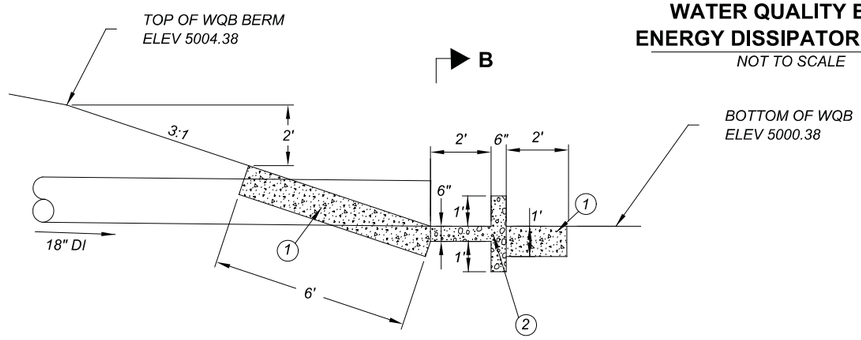

A - A
NOT TO SCALE

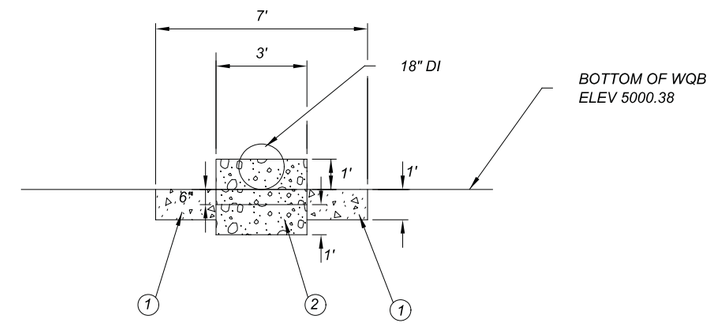

B - B
NOT TO SCALE

B

1. 1' THICK RIPRAP CL A WRAPPED WITH GEOTECTILE (INCIDENTAL)
2. STRUCTURAL CONCRETE CL A

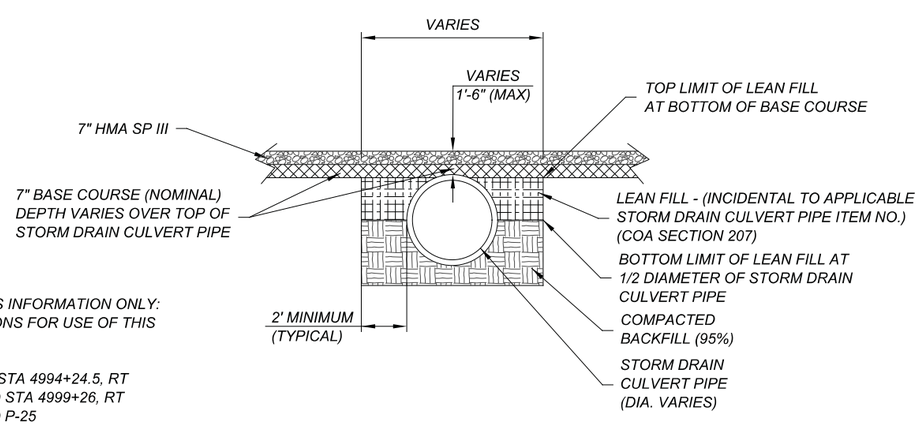

FOR CONTRACTOR'S INFORMATION ONLY:
POTENTIAL LOCATIONS FOR USE OF THIS
DETAIL ARE:

SD-31 FROM P-9 TO STA 4994+24.5, RT
SD-32 FROM P-12 TO STA 4999+26, RT
SD-35 FROM P-22 TO P-25
SD-9 FROM P-25 TO STA 5000+71+/-, RT

CONTRACTOR TO CONFIRM WITH
PROJECT MANAGER ON ACTUAL LOCATIONS
PRIOR TO INSTALLATION.

MINIMAL COVER STORM DRAIN DETAIL
NOT TO SCALE

NO.	DESCRIPTION	DATE	BY
4			
3			
2			
1			

REVISIONS (OR CHANGE NOTICES)

DESIGN REVIEW COMMITTEE	CITY ENGINEER APPROVAL

BERNALILLO COUNTY
PUBLIC WORKS DIVISION
TECHNICAL SERVICES DEPARTMENT

SUNPORT BOULEVARD EXTENSION
ENERGY DISSIPATOR DETAILS AND MINIMAL COVER STORM DRAIN DETAIL

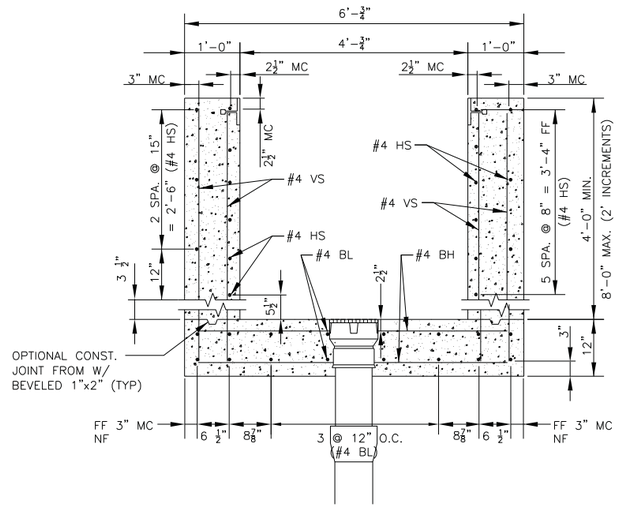

DETAIL "A"

N.T.S.

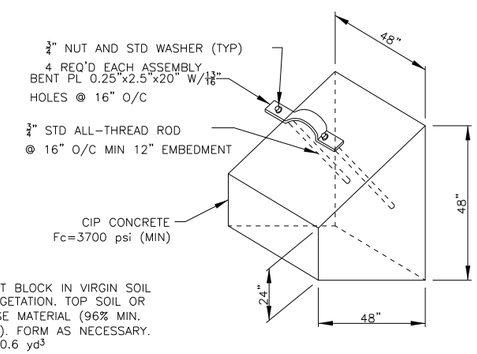

NOTE:
CAST THRUST BLOCK IN VIRGIN SOIL FREE OF VEGETATION. TOP SOIL OR OTHER LOOSE MATERIAL (96% MIN. COMPACTION). FORM AS NECESSARY. MIN. POUR=0.6 yd^3

CONCRETE THRUST BLOCK DETAIL

N.T.S.

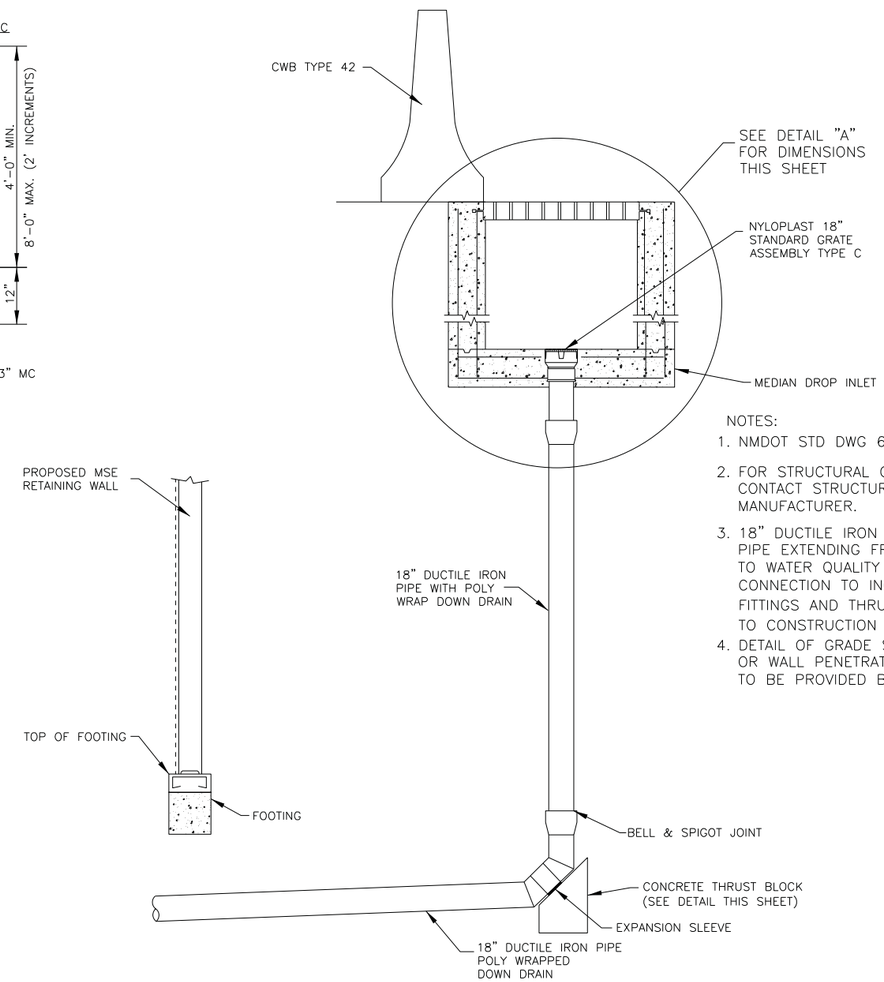

NOTES:

1. NMDOT STD DWG 623-01-1/1
2. FOR STRUCTURAL OR WALL DETAILS CONTACT STRUCTURE SECTION OR WALL MANUFACTURER.
3. 18" DUCTILE IRON POLYWRAPPED DOWN DRAIN PIPE EXTENDING FROM MEDIAN DROP INLET TO WATER QUALITY BASIN OUTLET CONNECTION TO INCLUDE ALL NECESSARY FITTINGS AND THRUST BLOCK WILL BE INCIDENTAL TO CONSTRUCTION OF SHOULDER DROP INLET.
4. DETAIL OF GRADE SEPERATION OR WALL PENETRATION AT PIPE CROSSING TO BE PROVIDED BY WALL MANUFACTURER.

DROP INLET WITH 18" PIPE

KEVIN W. EADES
NEW MEXICO
14481
REGISTERED PROFESSIONAL ENGINEER
7/10/2020

N REVIEW COMMITTEE	CITY ENGINEER APPROVAL

NO.	DESCRIPTION	DATE	BY
4			
3			
2			
1			

REVISIONS (OR CHANGE NOTICES)

BERNALILLO COUNTY
PUBLIC WORKS DIVISION
TECHNICAL SERVICES DEPARTMENT

SUNPORT BOULEVARD EXTENSION DETAILS
DROP INLET WITH DUCTILE IRON DOWN DRAIN

DESIGNED BY: designer PHONE: phone EMAIL: email

CLF-01
STA 8+17.40, RT 40.00' TO
STA 8+01.40, RT 40.00'
BUILD 1,267 LF - CHAIN LINK FENCE 6', AND ASSOCIATED POSTS AND CORNER BRACES.

CLG-01
STA 8+01.40, RT 40.00' TO
STA 8+17.40, RT 40.00'
BUILD 2 - 9' S X 6' R CHAIN LINK GATES

MISCELLANEOUS KEY LAYOUT NOTES

1. BEGIN 10' WIDE X 2' THICK RIPRAP PAD AT 24" END SECTION OUTLET (SEE SHEET 10-13 FOR ADDITIONAL INFORMATION)
2. END 10' WIDE X 2' THICK RIPRAP PAD. ADJUST LIMIT IN FIELD, AS NEEDED. (SEE SHEET 10-13 FOR ADDITIONAL INFORMATION)
3. ACCESS RD STA 0 +00 BEGIN ACCESS ROAD CONSTRUCTION AT TOP OF DETENTION BASIN
4. ACCESS RD STA 1+60.23 END ACCESS ROAD CONSTRUCTION AT BOTTOM OF DETENTION BASIN

NOTES:

1. ALL STATIONS BASELINE CONSTRUCTION
   DETENTION BASIN - TOP UNLESS OTHERWISE STATED.
2. DETENTION BASIN TO BE CONSTRUCTED WITH 2:1 SIDE SLOPES FROM EXISTING GROUND AT BASELINE CONSTRUCTION TO BOTTOM OF BASIN ELEVATION 4934.28.
   BUILD 1' THICK RIPRAP ON 2:1 SLOPES. SEE DETAIL D-D, THIS SHEET.
   CONSTRUCTION ALSO INCLUDES INSTALLATION OF 60 MIL HDPE LINER BENEATH RIPRAP SIDE SLOPES AND BASIN BOTTOM. SEE DETAILS, SHEET 10-22.
3. EXCAVATION OF DETENTION BASIN AND FINAL GRADING PAID UNDER ITEM 203000 - UNCLASSIFIED EXCAVATION.

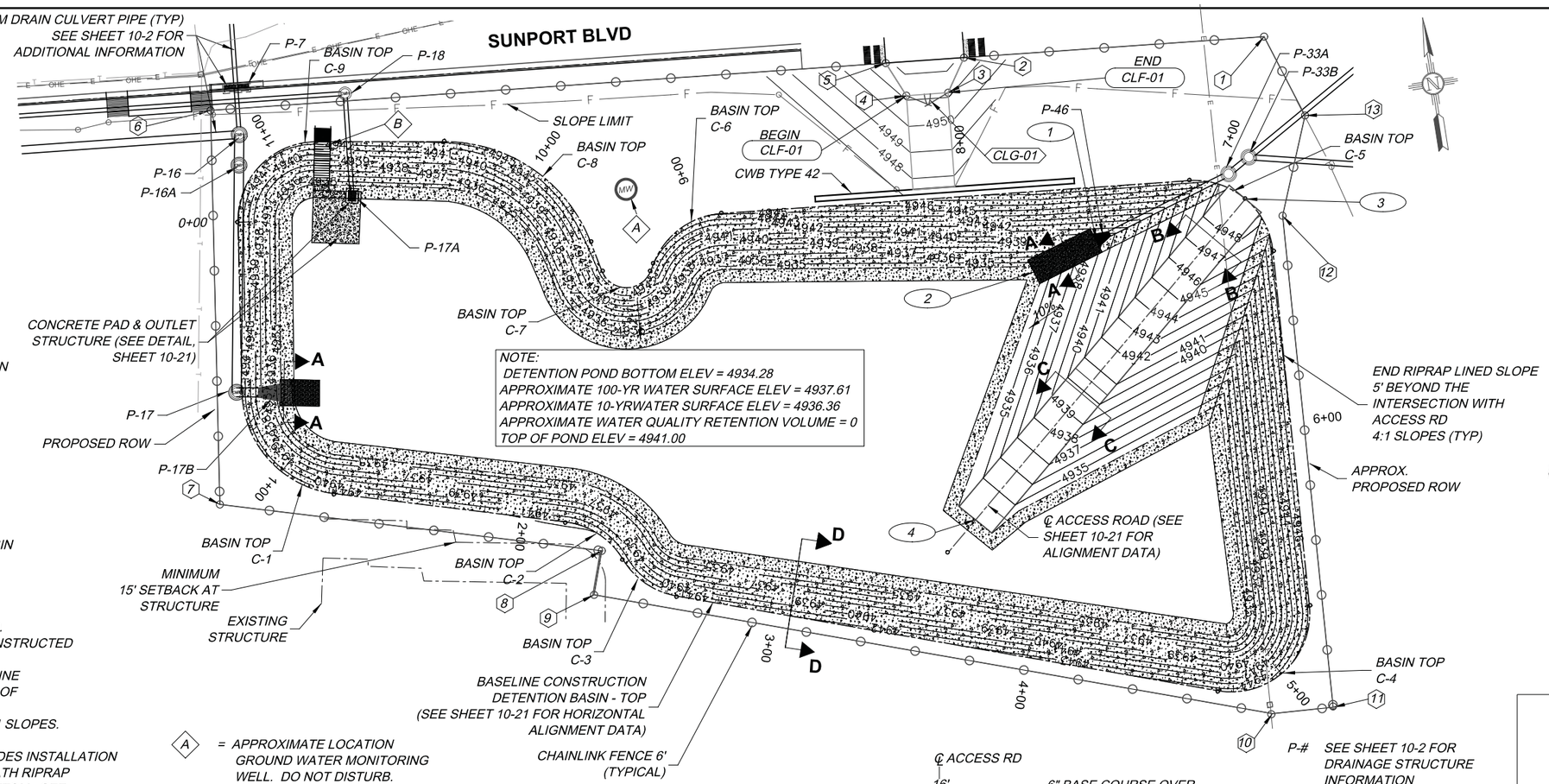

NOTE:
DETENTION POND BOTTOM ELEV = 4934.28
APPROXIMATE 100-YR WATER SURFACE ELEV = 4937.61
APPROXIMATE 10-YRWATER SURFACE ELEV = 4936.36
APPROXIMATE WATER QUALITY RETENTION VOLUME = 0
TOP OF POND ELEV = 4941.00

A = APPROXIMATE LOCATION GROUND WATER MONITORING WELL. DO NOT DISTURB.

B = MAINTENANCE ACCESS STAIRS SEE SHEET 10-22 FOR ADDITIONAL INFORMATION

P-# SEE SHEET 10-2 FOR DRAINAGE STRUCTURE INFORMATION

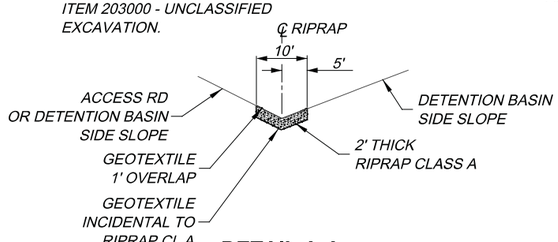

DETAIL A-A
RIRRAP PAD AT STORM CULVERT PIPE OUTLETS
(NOT TO SCALE)

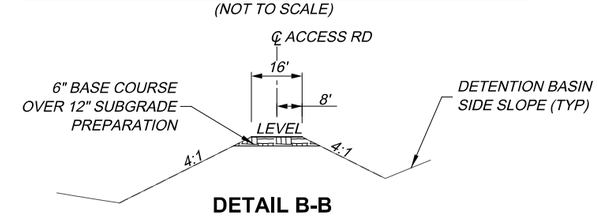

DETAIL B-B
DETENTION BASIN ACCESS ROAD
(NOT TO SCALE)

CHAINLINK FENCE KEY LAYOUT NOTES

1. STA 7+00.59, RT 59.01'
2. STA 7+94.41, RT 52.95'
3. STA 8+01.40, RT 40.00'
4. STA 8+17.40, RT 40.00'
5. STA 8+24.38, RT 52.95'
6. STA 11+08.02, RT 28.34'
7. STA 0+93.49, RT 25.37'
8. STA 2+30.08, RT 4.29'
9. STA 2+42.11, RT 16.86'
10. STA 4+90.85, RT 11.35'
11. STA 5+03.95, RT 22.91'
12. STA 6+76.25, RT 7.33'
13. STA 6+90.00, RT 39.14'

LEGEND

	=	CONCRETE PAD (SEE DETAIL, SHEET 10-21)
	=	RIPRAP CLASS, 1' THICK, SIDE SLOPES
	=	RIPRAP CLASS A PAD, 2' THICK
	=	NEW CHAINLINK FENCE 6'
4946	=	MAJOR FINISH CONTOUR (1' INTERVALS)

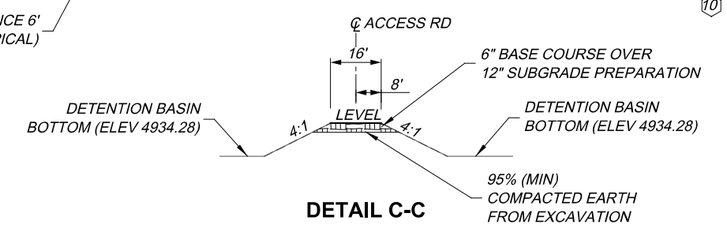

DETAIL C-C
DETENTION BASIN ACCESS ROAD
(NOT TO SCALE)

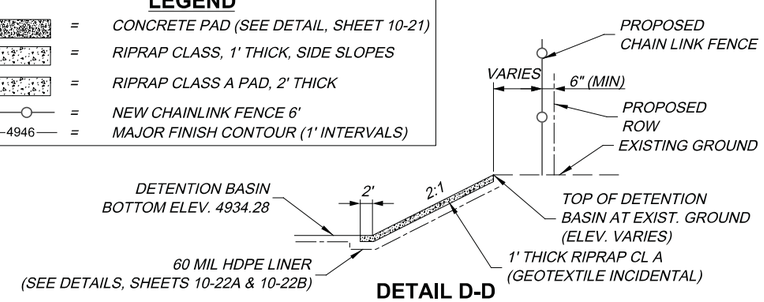

DETAIL D-D
DETENTION BASIN RIPRAP LINED 2:1 SIDE SLOPE TREATMENT
(NOT TO SCALE)

50 25 0 50
1" = 50'

KEVIN W. EADES
NEW MEXICO
14481
REGISTERED PROFESSIONAL ENGINEER
9/14/2020

DESIGN REVIEW COMMITTEE

CITY ENGINEER APPROVAL

NO.	DESCRIPTION	DATE	BY
4			
3			
2			
1			

REVISIONS (OR CHANGE NOTICES)

BERNALILLO COUNTY
PUBLIC WORKS DIVISION
TECHNICAL SERVICES DEPARTMENT

SUNPORT BOULEVARD EXTENSION
DETENTION BASIN
PLAN AND DETAILS

EMAIL:
PHONE:
DESIGNED BY:

BASELINE CONSTRUCTION DETENTION BASIN - TOP
HORIZONTAL ALIGNMENT

	STATION	NORTHING	EASTING
POB	0+00.00	1473648.529	1522498.114
PC	0+65.02	1473584.083	1522489.485
Tangent Direction:	S 7°37'32.8" W		
Tangent Length:	65.02'		

CURVE C-1

	STATION	NORTHING	EASTING
PC	0+65.02	1473584.083	1522489.485
PI	0+99.59	1473549.822	1522484.898
CC		1473578.775	1522529.132
PT	1+22.03	1473540.317	1522518.133

Radius: 40.00'
Delta: 81°39'58.3" Left
Length: 57.01'
Tangent: 34.57'
Chord: 52.31'
Middle Ordinate: 9.74'
External: 12.87'
Tangent Direction: S 7°37'32.8" W
Tangent Direction: S 74°02'25.6" E

	STATION	NORTHING	EASTING
PT	1+22.03	1473540.317	1522518.133
PC	2+11.14	1473515.818	1522603.800
Tangent Direction:	S 74°02'25.6" E		
Tangent Length:	89.10'		

CURVE C-2

	STATION	NORTHING	EASTING
PC	2+11.14	1473515.818	1522603.800
PI	2+25.73	1473511.805	1522617.833
CC		1473486.974	1522595.551
PRC	2+38.30	1473498.286	1522623.337

Radius: 30.00'
Delta: 51°53'20.2" Right
Length: 27.17'
Tangent: 14.60'
Chord: 26.25'
Middle Ordinate: 3.02'
External: 3.36'
Tangent Direction: S 74°02'25.6" E
Tangent Direction: S 22°09'05.3" E

CURVE C-3

	STATION	NORTHING	EASTING
PRC	2+38.30	1473498.286	1522623.337
PI	2+51.96	1473485.638	1522628.486
CC		1473509.598	1522651.123
PT	2+63.93	1473481.215	1522641.405

Radius: 30.00'
Delta: 48°56'54.7" Left
Length: 25.63'
Tangent: 13.66'
Chord: 24.86'
Middle Ordinate: 2.70'
External: 2.96'
Tangent Direction: S 22°09'05.3" E
Tangent Direction: S 71°06'00.0" E

	STATION	NORTHING	EASTING
PT	2+63.93	1473481.215	1522641.405
PC	4+73.99	1473413.173	1522840.141
Tangent Direction:	S 71°06'00.0" E		
Tangent Length:	210.06'		

CURVE C-4

	STATION	NORTHING	EASTING
PC	4+73.99	1473413.173	1522840.141
PI	5+13.66	1473400.323	1522877.670
CC		1473441.555	1522849.859
PT	5+29.39	1473439.933	1522879.815

Radius: 30.00'
Delta: 105°48'04.2" Left
Length: 55.40'
Tangent: 39.67'
Chord: 47.86'
Middle Ordinate: 11.90"
External: 19.73'
Tangent Direction: S 71°06'00.0" E
Tangent Direction: N 3°05'55.8" E

	STATION	NORTHING	EASTING
PT	5+29.39	1473439.933	1522879.815
PC	6+65.59	1473575.928	1522887.177
Tangent Direction:	N 3°05'55.8" E		
Tangent Length:	136.19'		

CURVE C-5

	STATION	NORTHING	EASTING
PC	6+65.59	1473575.928	1522887.177
PI	6+94.63	1473604.928	1522888.747
CC		1473577.550	1522857.221
PT	7+11.74	1473607.438	1522859.814

Radius: 30.00'
Delta: 88°08'25.3" Left
Length: 46.15'
Tangent: 29.04'
Chord: 41.73'
Middle Ordinate: 8.45'
External: 11.75'
Tangent Direction: N 3°05'55.8" E
Tangent Direction: N 85°02'29.6" W

	STATION	NORTHING	EASTING
PT	7+11.74	1473607.438	1522859.814
PC	8+91.11	1473622.942	1522681.112
Tangent Direction:	N 85°02'29.6" W		
Tangent Length:	179.37'		

CURVE C-6

	STATION	NORTHING	EASTING
PC	8+91.11	1473622.942	1522681.112
PI	9+10.14	1473624.587	1522662.149
CC		1473593.054	1522678.519
PT	9+25.03	1473608.130	1522652.583

Radius: 30.00'
Delta: 64°47'24.4" Left
Length: 33.92'
Tangent: 19.03'
Chord: 32.15'
Middle Ordinate: 4.67'
External: 5.53'
Tangent Direction: N 85°02'29.6" W
Tangent Direction: S 30°10'06.0" W

	STATION	NORTHING	EASTING
PT	9+25.03	1473608.130	1522652.583
PC	9+28.14	1473605.447	1522651.023
Tangent Direction:	S 30°10'06.0" W		
Tangent Length:	3.10'		

CURVE C-7

	STATION	NORTHING	EASTING
PC	9+28.14	1473605.447	1522651.023
PI	9+53.87	1473583.198	1522638.090
CC		1473610.472	1522642.378
PT	9+52.14	1473608.342	1522632.607

Radius: 10.00'
Delta: 137°31'46.9" Right
Length: 24.00'
Tangent: 25.73'
Chord: 18.64'
Middle Ordinate: 6.38'
External: 17.61'
Tangent Direction: S 30°10'06.0" W
Tangent Direction: N 12°18'07.1" W

	STATION	NORTHING	EASTING
PT	9+52.14	1473608.342	1522632.607
PC	9+64.19	1473620.115	1522630.040
Tangent Direction:	N 12°18'07.1" W		
Tangent Length:	12.05'		

CURVE C-8

	STATION	NORTHING	EASTING
PC	9+64.19	1473620.115	1522630.040
PI	10+05.25	1473660.228	1522621.293
CC		1473607.331	1522571.418
PT	10+36.20	1473666.603	1522580.735

Radius: 60.00'
Delta: 68°45'53.4" Left
Length: 72.01'
Tangent: 41.06'
Chord: 67.77'
Middle Ordinate: 10.48'
External: 12.70'
Tangent Direction: N 12°18'07.1" W
Tangent Direction: N 81°04'00.5" W

	STATION	NORTHING	EASTING
PT	10+36.20	1473666.603	1522580.735
PC	10+85.02	1473674.184	1522532.507
Tangent Direction:	N 81°04'00.5" W		
Tangent Length:	48.82'		

CURVE C-9

	STATION	NORTHING	EASTING
PC	10+85.02	1473674.184	1522532.507
PI	11+15.71	1473678.950	1522502.187
CC		1473644.548	1522527.848
PT	11+32.83	1473648.529	1522498.114

Radius: 30.00'
Delta: 91°18'26.7" Left
Length: 47.81'
Tangent: 30.69'
Chord: 42.91'
Middle Ordinate: 9.03'
External: 12.92'
Tangent Direction: N 81°04'00.5" W
Tangent Direction: S 7°37'32.8" W

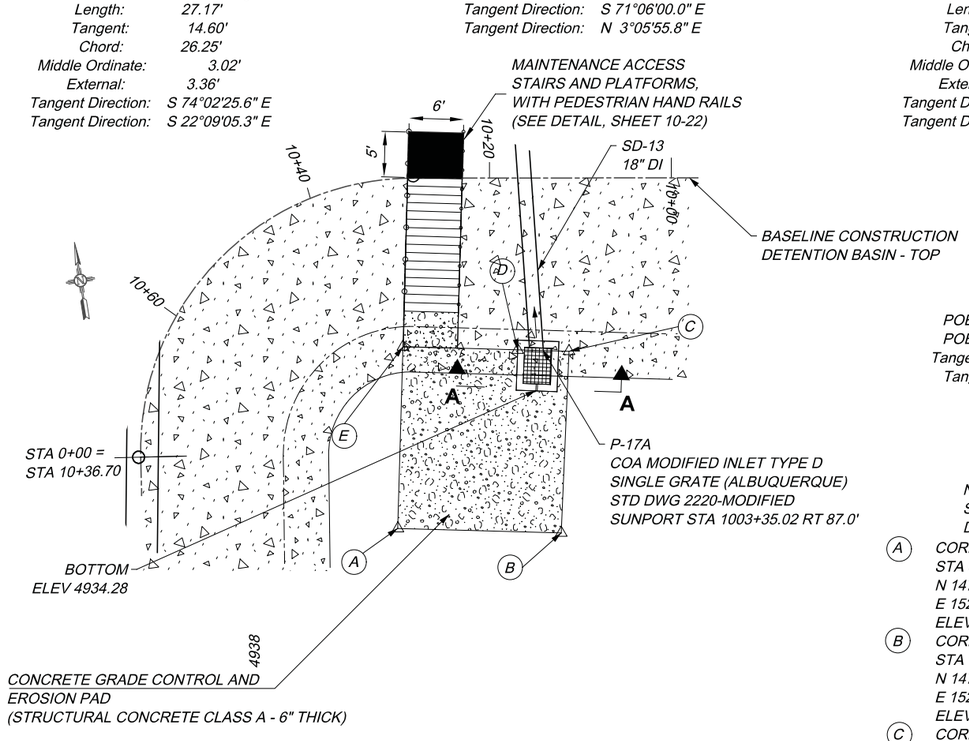

PLAN
CONCRETE GRADE CONTROL AND EROSION PAD
NOT TO SCALE

ACCESS ROAD
HORIZONTAL ALIGNMENT

	STATION	NORTHING	EASTING
POB	0+00.00	1473597.221	1522879.872
POE	1+76.65	1473481.391	1522746.492
Tangent Direction:	S 49°01'43.1" W		
Tangent Length:	176.65'		

CONCRETE PAD
KEY LAYOUT POINTS

NOTE:
STATIONS BASED ON BASELINE CONSTRUCTION DETENTION BASIN - TOP

(A) CORNER CONCRETE PAD
STA 0+08.50, LT 28.10'
N 1473636.380
E 1522524.833
ELEV 4934.28

(B) CORNER CONCRETE PAD
STA 10+12.13, LT 39.05'
N 1473633.079
E 1522542.516
ELEV 4934.28

(C) CORNER CONCRETE PAD
STA 1003+38.59, RT 85.63'
N 1473652.684
E 1522546.479
ELEV 4934.28

(D) CORNER CONCRETE PAD AT MDI
STA 10+16.91, LT 18.91'
N 1473653.719
E 1522540.921
ELEV 4934.28

(E) CORNER CONCRETE PAD
STA 10+31.37 LT 18.50'
N 1473656.028
E 1522528.502
ELEV 4934.28

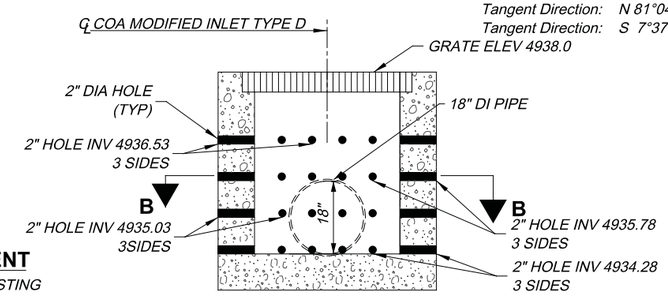

A - A
NOT TO SCALE

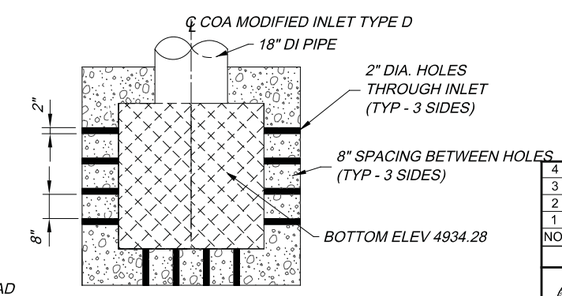

B - B
NOT TO SCALE

K. W. EADES
NEW MEXICO
14481
REGISTERED PROFESSIONAL ENGINEER
7/10/2020

DESIGN REVIEW COMMITTEE

CITY ENGINEER APPROVAL

NO.	DESCRIPTION	DATE	BY
4			
3			
2			
1			

REVISIONS (OR CHANGE NOTICES)

BERNALILLO COUNTY
PUBLIC WORKS DIVISION
TECHNICAL SERVICES DEPARTMENT

SUNPORT BOULEVARD EXTENSION
DETENTION BASIN HORIZONTAL ALIGNMENTS & DETAILS

DESIGNED BY: designer PHONE: phone EMAIL: email

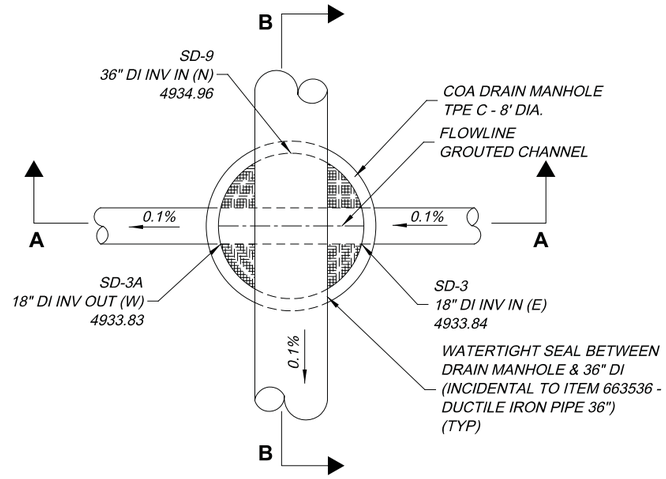

PLAN VIEW
DRAINAGE STRUCTURE P-19A
SEE SHEET 10-1
(NOT TO SCALE)

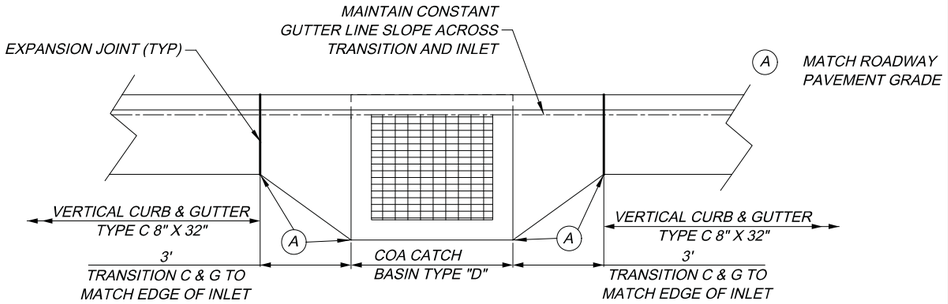

DETAIL
CURB AND GUTTER TRANSITION AT
COA TYPE "D" INLETS
(NOT TO SCALE)

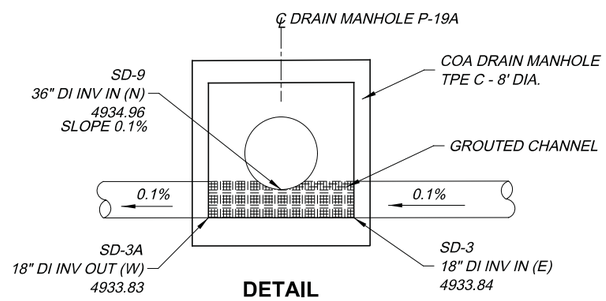

DETAIL
A - A
(NOT TO SCALE)

NOTE:
GROUTED CHANNEL AND EPOXY COATING
OF THE OUTSIDE OF 36" DUCTILE IRON PIPE
IS INCIDENTAL TO ITEM 662042 - MANHOLE TYPE C-8'
DIAMETER OVER 6' TO 10' DEPTH.

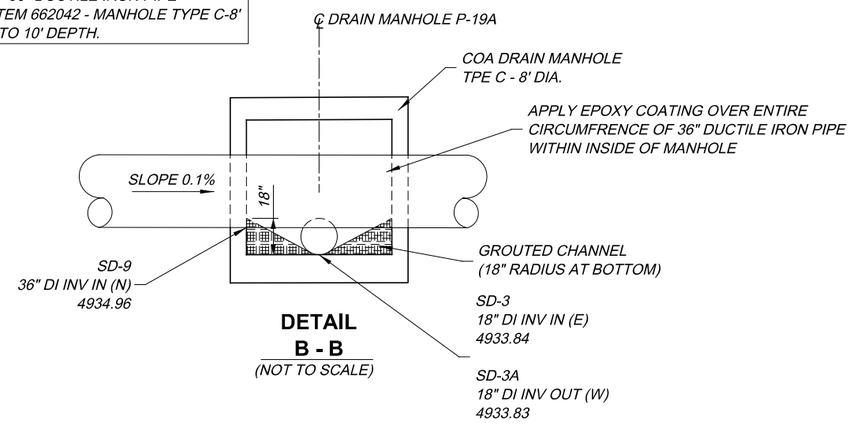

DETAIL
B - B
(NOT TO SCALE)

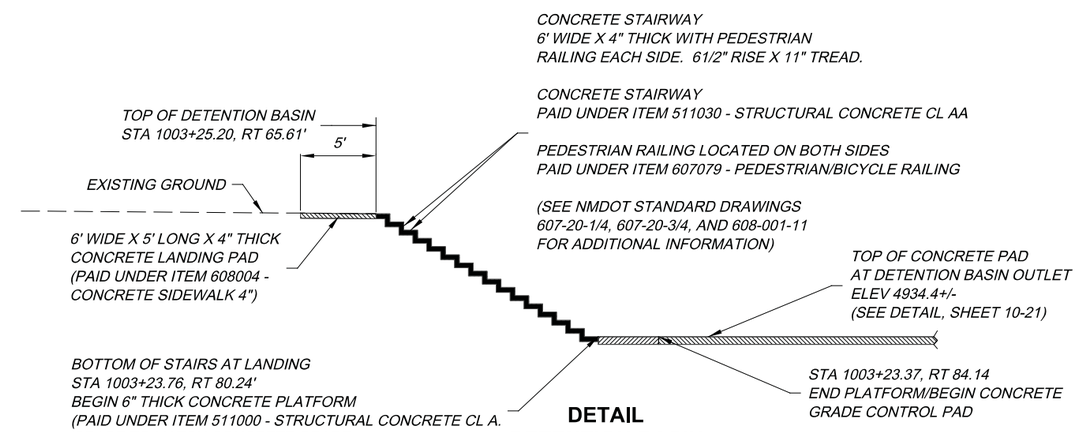

DETAIL
DETENTION BASIN
MAINTENANCE ACCESS
STAIRWAY
(NOT TO SCALE)

NOTE:
WARP DETENTION BASIN RIPRAP LINED SLOPES
TO MATCH SIDES OF STARWAY AND PLATFORMS

DESIGN REVIEW COMMITTEE	CITY ENGINEER APPROVAL

NO.	DESCRIPTION	DATE	BY
4			
3			
2			
1			

REVISIONS (OR CHANGE NOTICES)

BERNALILLO COUNTY
PUBLIC WORKS DIVISION
TECHNICAL SERVICES DEPARTMENT

SUNPORT BOULEVARD EXTENSION
MISCELLANEOUS DRAINAGE DETAILS

DESIGNED BY: designer
PHONE: phone
EMAIL: email

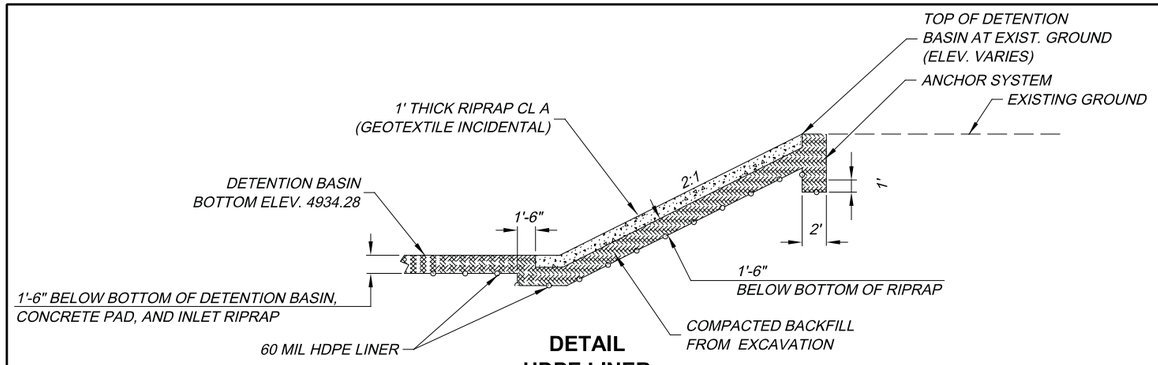

DETAIL
HDPE LINER
DETENTION BASIN BOTTOM & SIDE SLOPE TREATMENT WITH RIPRAP
(NOT TO SCALE)

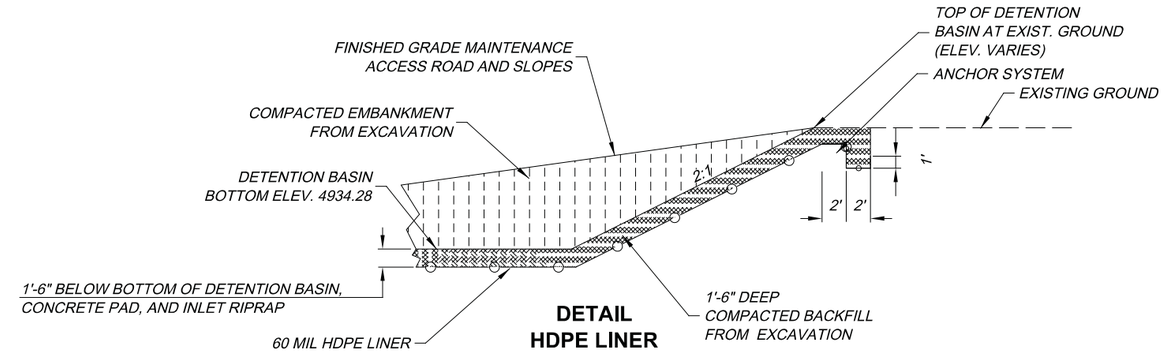

DETAIL
HDPE LINER
DETENTION BASIN BOTTOM & SIDE SLOPE TREATMENT AT MAINTENANCE ACCESS ROAD
(NOT TO SCALE)

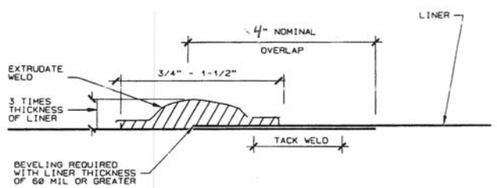

EXTRUSION WELD
NTS

NOTE:
1. LINER SHEETS TACK WELDED TOGETHER AT OVERLAP TO FORM TEMPORARY BOND PRIOR TO WELDING.
2. GRINDING NOT TO EXCEED 1/4" PAST "SQUEEZE-OUT" ON EITHER SIDE. PROPER CARE SHOULD BE TAKEN IN NOT REMOVING TOO MUCH MATERIAL WHEN GRINDING.
3. VACUUM TESTING IS THE NON-DESTRUCTIVE SEAM TEST METHOD FOR EXTRUSION WELDS.

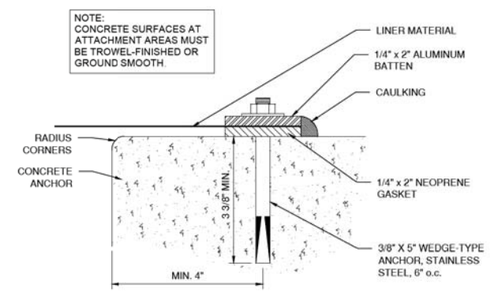

LINER ATTACHMENT TO CONCRETE - DETAIL

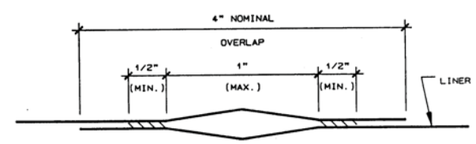

DOUBLE FUSION WELD
NTS

NOTE:
1. DOUBLE FUSION WELDING IS THE PRIMARY SEAMING TECHNIQUE USED
2. AIR PRESSURE OR VACUUM TESTING ARE THE NON-DESTRUCTIVE SEAM TEST METHODS FOR DOUBLE FUSION WELDS.

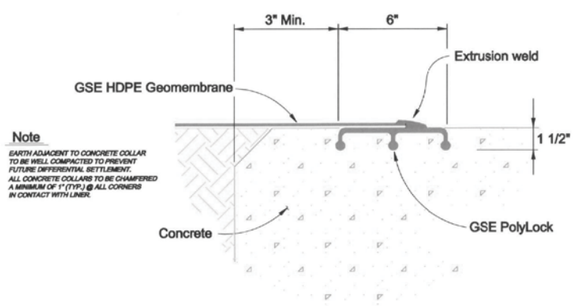

PolyLock Attachment
Not to scale

NOTE:
1. *60 MIL HDPE LINER PAID UNDER ITEM 604100 - HDPE LINER.*
2. *COMPACTED BACKFILL BELOW FINISHED GRADE OR UNDER RIPRAP, INCLUDING ANCHOR SYSTEM, TO BE INCIDENTAL TO ITEM 203000 - UNCLASSIFIED EXCAVATION.*

KEVIN W. EADES
NEW MEXICO
14481
REGISTERED PROFESSIONAL ENGINEER
9/14/2020

DESIGN REVIEW COMMITTEE

CITY ENGINEER APPROVAL

NO.	DESCRIPTION	DATE	BY
4			
3			
2			
1			

REVISIONS (OR CHANGE NOTICES)

BERNALILLO COUNTY
PUBLIC WORKS DIVISION
TECHNICAL SERVICES DEPARTMENT

SUNPORT BOULEVARD EXTENSION

HDPE LINER DETAILS (SHEET 1 OF 2)

DESIGNED BY: designer PHONE: phone EMAIL: email

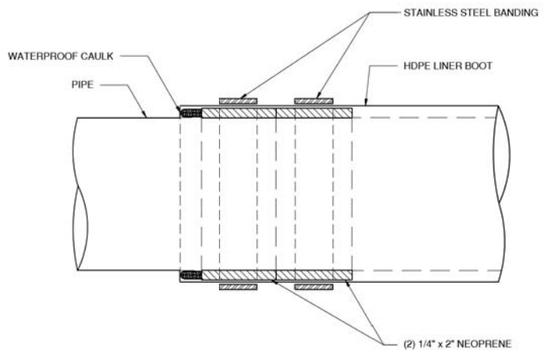

PIPE BOOT BANDING DETAIL

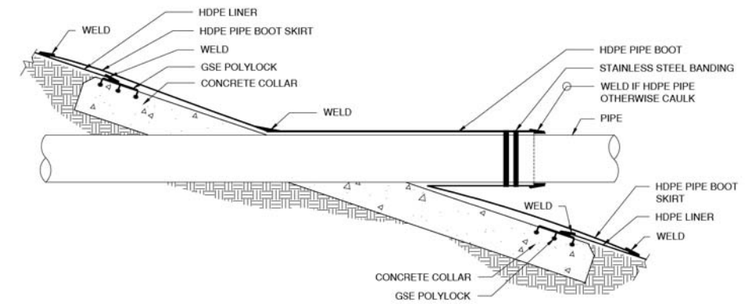

NOTE:
EARTH ADJACENT TO CONCRETE COLLAR TO BE WELL COMPACTED TO PREVENT FUTURE DIFFERENTIAL SETTLEMENT. ALL CONCRETE COLLARS TO BE CHAMFERED A MINIMUM OF 1" (TYP.) AT ALL CORNERS IN CONTACT WITH LINER.

PIPE PENETRATION W/SINGLE PIPE BOOT AND CONCRETE COLLAR W/POLYLOCK ATTACHMENTS

NO.	DESCRIPTION	DATE	BY
4			
3			
2			
1			

REVISIONS (OR CHANGE NOTICES)

DESIGN REVIEW COMMITTEE	CITY ENGINEER APPROVAL

BERNALILLO COUNTY
PUBLIC WORKS DIVISION
TECHNICAL SERVICES DEPARTMENT

SUNPORT BOULEVARD EXTENSION

HDPE LINER DETAILS (SHEET 2 OF 2)

DESIGNED BY: designer PHONE: phone EMAIL: email

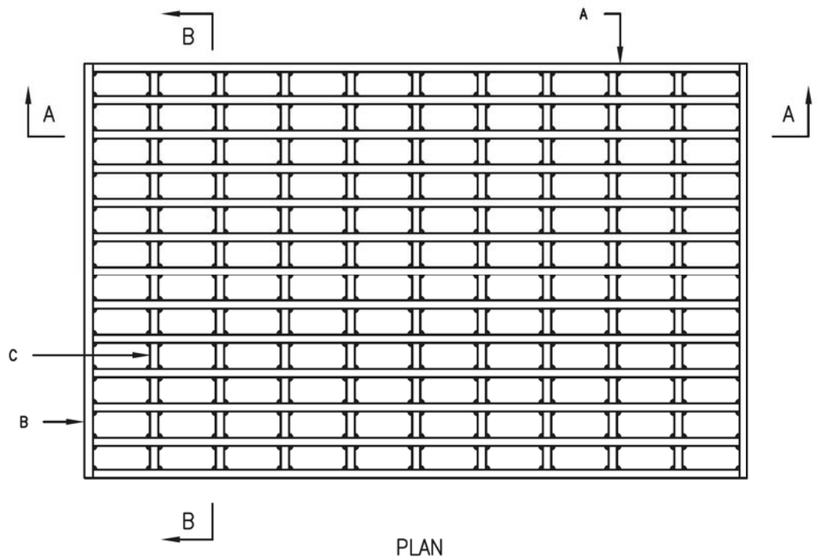

PLAN

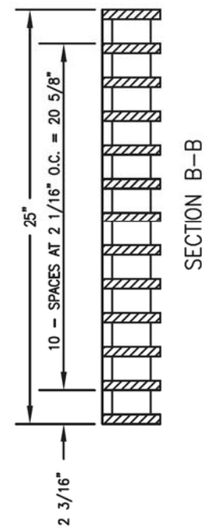

SECTION B–B

GENERAL NOTES:

1. ALL BARS SHALL BE STRUCTURAL GRADE STEEL, GRADE A36.
2. THE GRATE SHALL BE WELDED WITH 1/8" FILLET WELD AROUND BOTH SIDES OF CROSS BARS, 1/4". FILLET WELD BOTH SIDES OF BEARING BARS TO END BARS.
3. AFTER CLEANING SURFACE OF SCALE, RUST, OILS, ETC., PAINT GRATE WITH ONE SHOP COAT RED OXIDE, TWO FINISH COATS ALUMINUM PAINT (AASHTO M 69).
4. TOP OF CROSS BARS SHALL BE FLUSH WITH TOP OF GRATE.
5. GRIND WELDS FLUSH WITH BEARING BARS.
6. WHEN INSTALLED IN FRAME, PUSH TIGHT TO ONE SIDE, OTHER SIDE SHALL HAVE 1/2" MAX. OPENING. SPACERS WELDED TO FRAME MAY BE USED IF REQUIRED TO KEEP 1/2" SPACE OR LESS.

CONSTRUCTION NOTES:

A. BEARING BARS, (13) 1/2" X 3 1/2" X 39".

B. END BARS, (2) 1/2" X 3" X 25".

C. CROSS BARS, (9) 1/2" DIA. X 24".

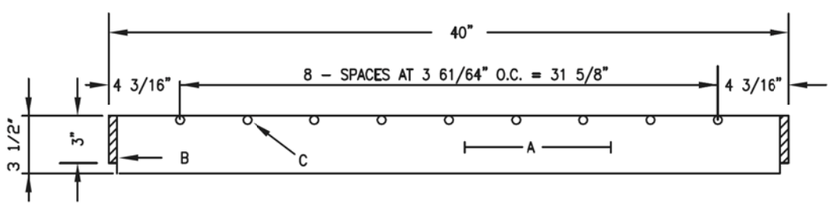

SECTION A–A

REVISIONS	CITY OF ALBUQUERQUE DRAINAGE STORM INLET ALBUQUERQUE GRATE DWG. 2220–MODIFIED FEB. 2014

FOR INFORMATION ONLY

NO.	DESCRIPTION	DATE	BY
4			
3			
2			
1			

REVISIONS (OR CHANGE NOTICES)

DESIGN REVIEW COMMITTEE	CITY ENGINEER APPROVAL

BERNALILLO COUNTY
PUBLIC WORKS DIVISION
TECHNICAL SERVICES DEPARTMENT

SUNPORT BOULEVARD EXTENSION
COA DRAINAGE STORM INLET ALBUQUERQUE GRATE

EMAIL: email
PHONE: phone
DESIGNED BY: designer

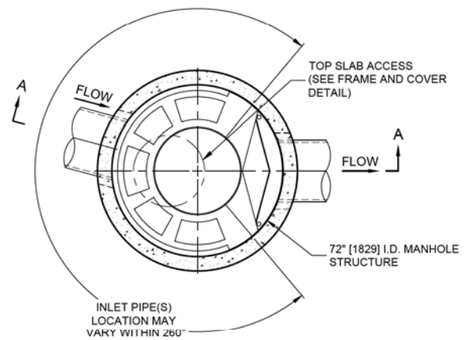

PLAN VIEW B-B
NOT TO SCALE

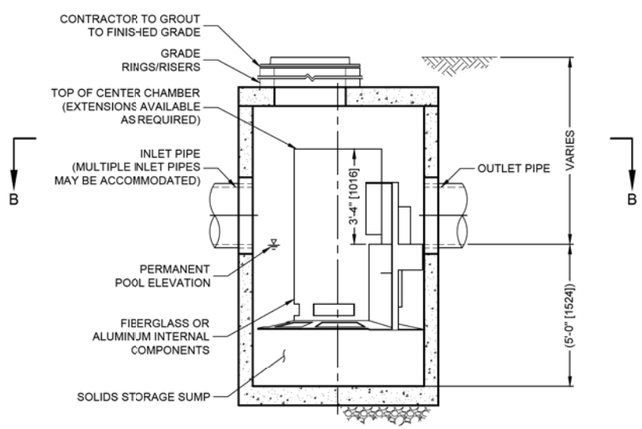

ELEVATION A-A
NOT TO SCALE

SITE SPECIFIC DATA REQUIREMENTS

STRUCTURE ID			P-33A
WATER QUALITY FLOW RATE (cfs [L/s])			5.0
PEAK FLOW RATE (cfs [L/s])			33.5
RETURN PERIOD OF PEAK FLOW (yrs)			100
RIM ELEVATION			4848.9
PIPE DATA:	INVERT	MATERIAL	DIAMETER
INLET PIPE 1	4941.47		24" (*)
INLET PIPE 2	NONE		
OUTLET PIPE	4941.42		24" (*)

NOTES / SPECIAL REQUIREMENTS:
(*) = 24" STORM DRAIN CULVERT PIPE

GENERAL NOTES:

1. STRUCTURE SHALL MEET AASHTO HS20 LOAD RATING, ASSUMING EARTH COVER OF 0' TO 2' [610], AND GROUNDWATER ELEVATION AT, OR BELOW, THE OUTLET PIPE INVERT ELEVATION. ENGINEER OF RECORD TO CONFIRM ACTUAL GROUNDWATER ELEVATION. CASTINGS SHALL MEET AASHTO M306.
2. STRUCTURE SHALL BE PRECAST CONCRETE CONFORMING TO ASTM C478 AND AASHTO LOAD FACTOR DESIGN METHOD.
3. ALTERNATE UNITS ARE SHOWN IN MILLIMETERS [mm].

INSTALLATION NOTES

A. ANY SUB-BASE, BACKFILL DEPTH, AND/OR ANTI-FLOTATION PROVISIONS ARE SITE-SPECIFIC DESIGN CONSIDERATIONS AND SHALL BE SPECIFIED BY ENGINEER OF RECORD.
B. CONTRACTOR TO PROVIDE EQUIPMENT WITH SUFFICIENT LIFTING AND REACH CAPACITY TO LIFT AND SET THE CASCADE SEPARATOR MANHOLE STRUCTURE.
C. CONTRACTOR TO INSTALL JOINT SEALANT BETWEEN ALL STRUCTURE SECTIONS AND ASSEMBLE STRUCTURE.
D. CONTRACTOR TO PROVIDE, INSTALL, AND GROUT INLET AND OUTLET PIPE(S). MATCH PIPE INVERTS WITH ELEVATIONS SHOWN. ALL PIPE CENTERLINES TO MATCH PIPE OPENING CENTERLINES.
E. CONTRACTOR TO TAKE APPROPRIATE MEASURES TO ASSURE UNIT IS WATER TIGHT, HOLDING WATER TO FLOWLINE INVERT MINIMUM. IT IS SUGGESTED THAT ALL JOINTS BELOW PIPE INVERTS ARE GROUTED.

\\AD.CONTECH-CPI.COM\ROOT\COMMON\CAD\TREATMENT\21 CASCADE\40 STANDARD DRAWINGS\DWG\CS-6-DTL.DWG
9/11/2020 1:49 PM

DESIGNED BY: designer PHONE: phone EMAIL: email

FOR INFORMATION ONLY

NO.	DESCRIPTION	DATE	BY
4			
3			
2			
1			

REVISIONS (OR CHANGE NOTICES)

DESIGN REVIEW COMMITTEE	CITY ENGINEER APPROVAL

BERNALILLO COUNTY
PUBLIC WORKS DIVISION
TECHNICAL SERVICES DEPARTMENT

SUNPORT BOULEVARD EXTENSION
6' DIAMETER SPECIAL MANHOLE DETAILS

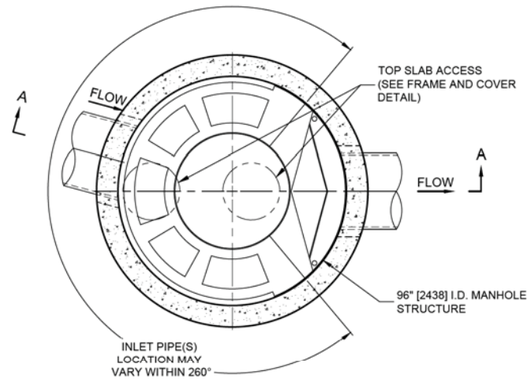

PLAN VIEW B-B
NOT TO SCALE

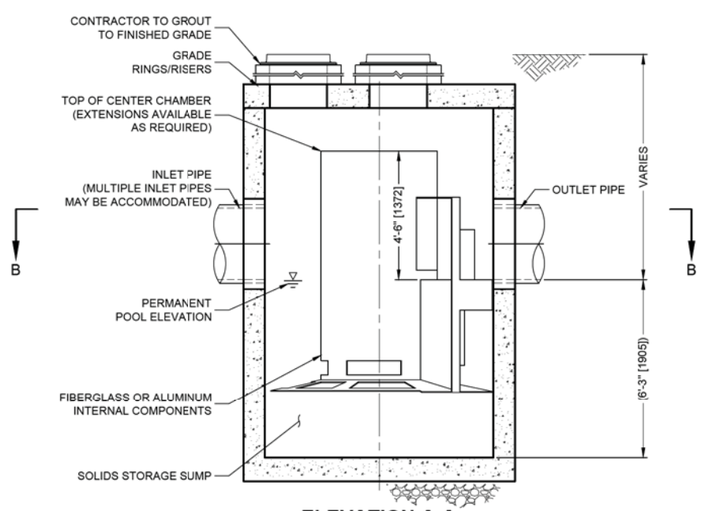

ELEVATION A-A
NOT TO SCALE

SITE SPECIFIC DATA REQUIREMENTS

STRUCTURE ID	P16-A
WATER QUALITY FLOW RATE (cfs [L/s])	7.4
PEAK FLOW RATE (cfs [L/s])	26
RETURN PERIOD OF PEAK FLOW (yrs)	100
RIM ELEVATION	4942.2

PIPE DATA:	INVERT	MATERIAL	DIAMETER
INLET PIPE 1	4934.57		42" RCP
INLET PIPE 2	NONE		
OUTLET PIPE	4934.52		42" RCP

NOTES / SPECIAL REQUIREMENTS:

GENERAL NOTES:

1. STRUCTURE SHALL MEET AASHTO HS20 LOAD RATING, ASSUMING EARTH COVER OF 0' TO 2' [610], AND GROUNDWATER ELEVATION AT, OR BELOW, THE OUTLET PIPE INVERT ELEVATION. ENGINEER OF RECORD TO CONFIRM ACTUAL GROUNDWATER ELEVATION. CASTINGS SHALL MEET AASHTO M306.
2. STRUCTURE SHALL BE PRECAST CONCRETE CONFORMING TO ASTM C478 AND AASHTO LOAD FACTOR DESIGN METHOD.
3. ALTERNATE UNITS ARE SHOWN IN MILLIMETERS [mm].

INSTALLATION NOTES

A. ANY SUB-BASE, BACKFILL DEPTH, AND/OR ANTI-FLOTATION PROVISIONS ARE SITE-SPECIFIC DESIGN CONSIDERATIONS AND SHALL BE SPECIFIED BY ENGINEER OF RECORD.
B. CONTRACTOR TO PROVIDE EQUIPMENT WITH SUFFICIENT LIFTING AND REACH CAPACITY TO LIFT AND SET THE CASCADE SEPARATOR MANHOLE STRUCTURE.
C. CONTRACTOR TO INSTALL JOINT SEALANT BETWEEN ALL STRUCTURE SECTIONS AND ASSEMBLE STRUCTURE.
D. CONTRACTOR TO PROVIDE, INSTALL, AND GROUT INLET AND OUTLET PIPE(S). MATCH PIPE INVERTS WITH ELEVATIONS SHOWN. ALL PIPE CENTERLINES TO MATCH PIPE OPENING CENTERLINES.
E. CONTRACTOR TO TAKE APPROPRIATE MEASURES TO ASSURE UNIT IS WATER TIGHT, HOLDING WATER TO FLOWLINE INVERT MINIMUM. IT IS SUGGESTED THAT ALL JOINTS BELOW PIPE INVERTS ARE GROUTED.

\\AD.CONTECH-CPI.COM\ROOT\COMMON\CAD\TREATMENT\21 CASCADE\40 STANDARD DRAWINGS\DWG\CS-8-DTL.DWG
5/11/2020 1:46 PM

DESIGNED BY: designer PHONE: phone EMAIL: email

FOR INFORMATION ONLY

NO.	DESCRIPTION	DATE	BY
4			
3			
2			
1			

REVISIONS (OR CHANGE NOTICES)

DESIGN REVIEW COMMITTEE	CITY ENGINEER APPROVAL

BERNALILLO COUNTY
PUBLIC WORKS DIVISION
TECHNICAL SERVICES DEPARTMENT

SUNPORT BOULEVARD EXTENSION
8' DIAMETER SPECIAL MANHOLE DETAILS

APPENDIX C

AHYMO DATA

```
*S Sunport Boulevard extension by Jonah Ruybalid  NOV 19 2019
*
START               TIME=0.0 HR  PUNCH CODE=0
*S 100-YEAR, 24-HOUR STORM EVENT- ZONE 2
RAINFALL            TYPE=2  QUARTER HR RAIN=0.00  ONE HR RAIN=1.80
                   SIX HR RAIN=2.24  DAILY RAIN=2.59 DT=0.05 HR
* 10-YEAR, 24-HOUR STORM EVENT, - ZONE 2
*RAINFALL            TYPE=2  QUARTER HR RAIN=0.00  ONE HR RAIN=1.14
*                    SIX HR RAIN=1.47  DAILY RAIN=1.76 DT=0.05 HR
*
*****************************************************************************
SEDIMENT BULK       CODE = 1 BULK FACTOR = 1.10
*****************************************************************************
*PROPOSED SITE CONDITIONS
*
COMPUTE NM HYD      ID=1  HYD=XF  DA=0.003794
                    A B C D 30 40 20  10
                    TP=0.13330   MASS RAIN=-1
PRINT HYD           ID=1  CODE=1
*
COMPUTE NM HYD      ID=2  HYD=XE1  DA=0.0.0004978
                    A B C D  0  0  85  15
                    TP=0.13330   MASS RAIN=-1
PRINT HYD           ID=2  CODE=1
*
COMPUTE NM HYD      ID=3  HYD=XE2  DA=0.0.0002535
                    A B C D  0  0  80  20
                    TP=0.13330   MASS RAIN=-1
PRINT HYD           ID=3  CODE=1
*
*Add basins XF and XE2 basin-routing
ADD HYD             ID=4  HYD=XF_XE2  ID=1  ID=3
PRINT HYD           ID=4  CODE=1
*
COMPUTE NM HYD      ID=5  HYD=XE3  DA=0.003694
                    A B C D  86  0  14  0
                    TP=0.13330   MASS RAIN=-1
PRINT HYD           ID=5  CODE=1
*
COMPUTE NM HYD      ID=6  HYD=XD3  DA=0.0017353
                    A B C D  0  40  50  10
                    TP=0.13330   MASS RAIN=-1
PRINT HYD           ID=6  CODE=1
*
COMPUTE NM HYD      ID=7  HYD=XD4  DA=0.00021196
                    A B C D  0  0  70  30
                    TP=0.13330   MASS RAIN=-1
PRINT HYD           ID=7  CODE=1
*
*Add basins XD3 and XD4 basin-routing
```

```
ADD HYD             ID=8  HYD=XD3_XD4  ID=6  ID=7
PRINT HYD           ID=8  CODE=1
*
*Add basins XD3, XD4, XE2, XF basin-routing
ADD HYD             ID=9  HYD=XD3_XD4_XE2_XF  ID=4  ID=8
PRINT HYD           ID=9  CODE=1
*
COMPUTE NM HYD      ID=10  HYD=XD5  DA=0.002328
                    A B C D  0  50  50  0
                    TP=0.13330   MASS RAIN=-1
PRINT HYD           ID=10  CODE=1
*
COMPUTE NM HYD      ID=11  HYD=H3  DA=0.000283628
                    A B C D  0  0  0  100
                    TP=0.13330   MASS RAIN=-1
PRINT HYD           ID=11  CODE=1
*
COMPUTE NM HYD      ID=12  HYD=H4  DA=0.0012214
                    A B C D  0  0  0  100
                    TP=0.13330   MASS RAIN=-1
PRINT HYD           ID=12  CODE=1
*
*Add basins H3 and H4 basin-routing
ADD HYD             ID=13  HYD=H3_H4  ID=11  ID=12
PRINT HYD           ID=13  CODE=1
*
COMPUTE NM HYD      ID=14  HYD=I3  DA=0.0013089
                    A B C D  0  0  0  100
                    TP=0.13330   MASS RAIN=-1
PRINT HYD           ID=14  CODE=1
*
*Add basins I3 H3 H4 basin-routing
ADD HYD             ID=15  HYD=I3_H3_H4  ID=13  ID=14
PRINT HYD           ID=15  CODE=1
*
COMPUTE NM HYD      ID=16  HYD=I4  DA=0.000589138
                    A B C D  0  0  0  100
                    TP=0.13330   MASS RAIN=-1
PRINT HYD           ID=16  CODE=1
*
*Add basins I4 I3 H3 H4 basin-routing
ADD HYD             ID=17  HYD=WQPondInS(I4_I3_H3_H4)  ID=15  ID=16
PRINT HYD           ID=17  CODE=1
*
*Add basins I4 I3 H3 H4 XE1 basin-routing WQPondIn
ADD HYD             ID=18  HYD=I4_I3_H3_H4_XE1  ID=2  ID=17
PRINT HYD           ID=18  CODE=1
*
*Add basins XE2 and XD5 basin-routing SDC in overland
ADD HYD             ID=19  HYD=XE2_XD5  ID=5  ID=10
```

```
PRINT HYD           ID=19  CODE=1
*
* Water Quality Pond outflows over weir to south diversion channel
ROUTE RESERVOIR     ID=20  HYD=WQPondOut  INFLOW ID=18  CODE=5
                       OUTFLOW(cfs)   STORAGE(ac ft)    ELEV(ft)
                       0.000           0.0             5000.4
                       0.010           0.0336          5001.0
                       0.010           0.1012          5002.0
                       1.700           0.1879          5003.0
                      61.200           0.2954          5004.0
                     224.200           0.5023          5005.0
                     502.900           0.7324          5006.0
                     912.800           0.9827          5007.0
                    1000.000          10.0000          5008.0
*
**************************************************************
*
COMPUTE NM HYD      ID=1  HYD=XD1  DA=0.0015604
                    A B C D  0  45  40  15
                    TP=0.13330   MASS RAIN=-1
PRINT HYD           ID=1  CODE=1
*
COMPUTE NM HYD      ID=2  HYD=XD2  DA=0.0016502
                    A B C D  10  30  40  20
                    TP=0.13330   MASS RAIN=-1
PRINT HYD           ID=2  CODE=1
*
COMPUTE NM HYD      ID=3  HYD=M4  DA=0.0003507
                    A B C D  0  0  0  100
                    TP=0.13330   MASS RAIN=-1
PRINT HYD           ID=3  CODE=1
*
COMPUTE NM HYD      ID=4  HYD=M3  DA=0.00033327
                    A B C D  0  0  0  100
                    TP=0.13330   MASS RAIN=-1
PRINT HYD           ID=4  CODE=1
*
COMPUTE NM HYD      ID=5  HYD=XM2  DA=0.0010503
                    A B C D  0  0  78  22
                    TP=0.13330   MASS RAIN=-1
PRINT HYD           ID=5  CODE=1
*
COMPUTE NM HYD      ID=6  HYD=XM1  DA=0.0005732
                    A B C D  0  0  55  45
                    TP=0.13330   MASS RAIN=-1
PRINT HYD           ID=6  CODE=1
*
COMPUTE NM HYD      ID=7  HYD=M1  DA=0.00185513
                    A B C D  0  10  38  52
                    TP=0.13330   MASS RAIN=-1
```

```
PRINT HYD           ID=7  CODE=1
*
COMPUTE NM HYD      ID=8  HYD=M2  DA=0.00060728
                    A B C D  0  0  0  100
                    TP=0.13330   MASS RAIN=-1
PRINT HYD           ID=8  CODE=1
*
*Add basins XD1 M4 basin-routing
ADD HYD             ID=9  HYD=XD1_M4  ID=1  ID=3
PRINT HYD           ID=9  CODE=1
*
*Add basins XD2 M3 basin-routing
ADD HYD             ID=10  HYD=XD2_M3  ID=2  ID=4
PRINT HYD           ID=10  CODE=1
*
*Add basins XM2 XD2 M3 basin-routing
ADD HYD             ID=11  HYD=XM2_XD2_M3  ID=5  ID=10
PRINT HYD           ID=11  CODE=1
*
*Add basins XM2 XD2 M3 XD1 M4 basin-routing
ADD HYD             ID=12  HYD=XM2_XD2_M3_XD1_M4  ID=9  ID=11
PRINT HYD           ID=12  CODE=1
*
*Add basins M1 XM1 basin-routing
ADD HYD             ID=13  HYD=M1_XM1  ID=6  ID=7
PRINT HYD           ID=13  CODE=1
*
COMPUTE NM HYD      ID=14  HYD=N  DA=0.00367838
                    A B C D  15  0  85  0
                    TP=0.13330   MASS RAIN=-1
PRINT HYD           ID=14  CODE=1
*
*Add basins N XM2 XD2 M3 XD1 M4  basin-routing
ADD HYD             ID=15  HYD=N_XM2_XD2_M3_XD1_M4  ID=12  ID=14
PRINT HYD           ID=15  CODE=1
*
*Add basins M1 XM1 M2  basin-routing
ADD HYD             ID=16  HYD=M1_XM1_M2  ID=8  ID=13
PRINT HYD           ID=16  CODE=1
*
*Add basins M1 XM1 M2 N XM2 XD2 M3 XD1 M4 basin-routing
ADD HYD             ID=17  HYD=woodward  ID=15  ID=16
PRINT HYD           ID=17  CODE=1
*
COMPUTE NM HYD      ID=18  HYD=I1  DA=0.000621979
                    A B C D  0  0  0  100
                    TP=0.13330   MASS RAIN=-1
PRINT HYD           ID=18  CODE=1
*
COMPUTE NM HYD      ID=19  HYD=I2  DA=0.000247657
```

```
                    A B C D  0  0  0  100
                    TP=0.13330   MASS RAIN=-1
PRINT HYD           ID=19  CODE=1
*
*Add basins I2 I1 basin-routing
ADD HYD             ID=20  HYD=I2_I1  ID=18  ID=19
PRINT HYD           ID=20  CODE=1
*
COMPUTE NM HYD      ID=1  HYD=H2  DA=0.000540774
                    A B C D  0  0  0  100
                    TP=0.13330   MASS RAIN=-1
PRINT HYD           ID=1  CODE=1
*
*Add basins H2 I2 I1 basin-routing
ADD HYD             ID=2  HYD=H2_I2_I1  ID=20  ID=1
PRINT HYD           ID=2  CODE=1
*
COMPUTE NM HYD      ID=3  HYD=H1  DA=0.000254482
                    A B C D  0  0  0  100
                    TP=0.13330   MASS RAIN=-1
PRINT HYD           ID=3  CODE=1
*
*Add basins H1 H2 I2 I1 basin-routing
ADD HYD             ID=4  HYD=H1_H2_I2_I1  ID=2  ID=3
PRINT HYD           ID=4  CODE=1
*
COMPUTE NM HYD      ID=5  HYD=H  DA=0.000663978
                    A B C D  0  0  0  100
                    TP=0.13330   MASS RAIN=-1
PRINT HYD           ID=5  CODE=1
*
*Add basins H H1 H2 I2 I1 basin-routing
ADD HYD             ID=6  HYD=H_H1_H2_I2_I1  ID=4  ID=5
PRINT HYD           ID=6  CODE=1
*
COMPUTE NM HYD      ID=7  HYD=I  DA=0.000641823
                    A B C D  0  0  0  100
                    TP=0.13330   MASS RAIN=-1
PRINT HYD           ID=7  CODE=1
*
*Add basins I H H1 H2 I2 I1 basin-routing
ADD HYD             ID=8  HYD=I_H_H1_H2_I2_I1  ID=6  ID=7
PRINT HYD           ID=8  CODE=1
*
*Add basins DetPondInE(M1 XM1 M2 N XM2 XD2 M3 XD1 M4 I H H1 H2 I2 I1) basin-routing
ADD HYD             ID=21  HYD=DetPondInE  ID=17  ID=8
PRINT HYD           ID=21  CODE=1
*
COMPUTE NM HYD      ID=9  HYD=P  DA=0.000468872
                    A B C D  0  0  0  100
```

```
                    TP=0.13330   MASS RAIN=-1
PRINT HYD           ID=9  CODE=1
*
COMPUTE NM HYD      ID=10  HYD=S  DA=0.000444064
                    A B C D  0  0  0  100
                    TP=0.13330   MASS RAIN=-1
PRINT HYD           ID=10  CODE=1
*
*Add basins S P basin-routing
ADD HYD             ID=11  HYD=S_P  ID=9  ID=10
PRINT HYD           ID=11  CODE=1
*
COMPUTE NM HYD      ID=12  HYD=P1  DA=0.000967237
                    A B C D  0  0  10  90
                    TP=0.13330   MASS RAIN=-1
PRINT HYD           ID=12  CODE=1
*
COMPUTE NM HYD      ID=13  HYD=S1  DA=0.000578041
                    A B C D  0  0  10  90
                    TP=0.13330   MASS RAIN=-1
PRINT HYD           ID=13  CODE=1
*
*Add basins S1 P1 basin-routing
ADD HYD             ID=14  HYD=S1_P1  ID=12  ID=13
PRINT HYD           ID=14  CODE=1
*
*Add basins S P S1 P1 basin-routing
ADD HYD             ID=15  HYD=S1_P1_S_P  ID=11  ID=14
PRINT HYD           ID=15  CODE=1
*
COMPUTE NM HYD      ID=16  HYD=T  DA=0.00126173
                    A B C D   0  0  0  100
                    TP=0.13330   MASS RAIN=-1
PRINT HYD           ID=16  CODE=1
*
*Add basins T S1 P1 S P basin-routing
ADD HYD             ID=17  HYD=T_S1_P1_S_P  ID=15  ID=16
PRINT HYD           ID=17  CODE=1
*
COMPUTE NM HYD      ID=18  HYD=Q1  DA=0.000194272
                    A B C D  0  0  10  90
                    TP=0.13330   MASS RAIN=-1
PRINT HYD           ID=18  CODE=1
*
COMPUTE NM HYD      ID=19  HYD=R1  DA=0.0003026
                    A B C D   0  0  10  90
                    TP=0.13330   MASS RAIN=-1
PRINT HYD           ID=19  CODE=1
*
*Add basins Q1 R1 basin-routing
```

```
ADD HYD             ID=20  HYD=Q1_R1  ID=18  ID=19
PRINT HYD           ID=20  CODE=1
*
COMPUTE NM HYD      ID=1  HYD=Q  DA=0.000793384
                    A B C D  0  0  8  92
                    TP=0.13330   MASS RAIN=-1
PRINT HYD           ID=1  CODE=1
*
COMPUTE NM HYD      ID=2  HYD=R  DA=0.000582811
                    A B C D   0  0  10  90
                    TP=0.13330   MASS RAIN=-1
PRINT HYD           ID=2  CODE=1
*
*Add basins Q R basin-routing
ADD HYD             ID=3  HYD=Q_R  ID=1  ID=2
PRINT HYD           ID=3  CODE=1
*
*Add basins Q R Q1 R1 basin-routing
ADD HYD             ID=4  HYD=Q_R_Q1_R1  ID=20  ID=3
PRINT HYD           ID=4  CODE=1
*
*Add basins Q R Q1 R1 T S1 P1 S P basin-routing
ADD HYD             ID=5  HYD=broadway  ID=17  ID=4
PRINT HYD           ID=5  CODE=1
*
COMPUTE NM HYD      ID=6  HYD=XC  DA=0.004401217
                    A B C D   0  0  80  20
                    TP=0.13330   MASS RAIN=-1
PRINT HYD           ID=6  CODE=1
*
*Add basins Q R Q1 R1 T S1 P1 S P XC basin-routing
ADD HYD             ID=7  HYD=broadway XC  ID=5  ID=6
PRINT HYD           ID=7  CODE=1
*
COMPUTE NM HYD      ID=8  HYD=D  DA=0.000317857
                    A B C D   0  0  0  100
                    TP=0.13330   MASS RAIN=-1
PRINT HYD           ID=8  CODE=1
*
COMPUTE NM HYD      ID=9  HYD=C  DA=0.00037726
                    A B C D   0  0  0  100
                    TP=0.13330   MASS RAIN=-1
PRINT HYD           ID=9  CODE=1
*
*Add basins D C basin-routing
ADD HYD             ID=10  HYD=D_C  ID=8  ID=9
PRINT HYD           ID=10  CODE=1
*
*Add basins D C Q R Q1 R1 T S1 P1 S P XC basin-routing
ADD HYD             ID=11  HYD=Broadway Sun  ID=7  ID=10
```

```
PRINT HYD           ID=11  CODE=1
*
COMPUTE NM HYD      ID=12  HYD=G1  DA=0.001237166
                    A B C D   0  0  0  100
                    TP=0.13330   MASS RAIN=-1
PRINT HYD           ID=12  CODE=1
*
COMPUTE NM HYD      ID=13  HYD=G  DA=0.001068715
                    A B C D   0  0  0  100
                    TP=0.13330   MASS RAIN=-1
PRINT HYD           ID=13  CODE=1
*
*Add basins G1 G basin-routing
ADD HYD             ID=14  HYD=G1_G  ID=12  ID=13
PRINT HYD           ID=14  CODE=1
*
*Add basins G1 G D C Q R Q1 R1 T S1 P1 S P XC basin-routing
ADD HYD             ID=15  HYD=DetPondInW  ID=11  ID=14
PRINT HYD           ID=15  CODE=1
*
*Add basins G1 G D C Q R Q1 R1 T S1 P1 S P XC M1 XM1 M2 N XM2 XD2 M3 XD1 M4 I H H1
H2 I2 I1 basin-routing
ADD HYD             ID=16  HYD=DetPondInSS  ID=21  ID=15
PRINT HYD           ID=16  CODE=1
*
COMPUTE NM HYD      ID=17  HYD=XJ  DA=0.007554964
                    A B C D    30  33  37  0
                    TP=0.13330   MASS RAIN=-1
PRINT HYD           ID=17  CODE=1
*
COMPUTE NM HYD      ID=18  HYD=XJ1  DA=0.0104488
                    A B C D    0  75  25  0
                    TP=0.13330   MASS RAIN=-1
PRINT HYD           ID=18  CODE=1
*
*Add basins XJ1 XJ basin-routing
ADD HYD             ID=19  HYD=XJ1_XJ  ID=17  ID=18
PRINT HYD           ID=19  CODE=1
*
*Add basins XJ1 XJ G1 G D C Q R Q1 R1 T S1 P1 S P XC M1 XM1 M2 N XM2 XD2 M3 XD1 M4 I
H H1 H2 I2 I1 basin-routing
ADD HYD             ID=20  HYD=DetPondIn  ID=16  ID=19
PRINT HYD           ID=20  CODE=1
*
* pond discharges into storm sewer that discharges into the San Jose Drain
ROUTE RESERVOIR     ID=1  HYD=DetPondOut  INFLOW ID=20  CODE=5
                    OUTFLOW(cfs) STORAGE(ac ft)   ELEV(ft)
                     0.000         0.000          4934.3
                     0.850         0.600          4935
                     2.490         1.430          4936
```

```
                     4.730         2.350          4937
                     6.760         3.320          4938
                    14.530         4.350          4939
                    16.130         5.450          4940
                    17.770         6.600          4941
                    18.640         7.280          4941.5
*
*************************************************************
*
COMPUTE NM HYD      ID=2  HYD=XV  DA=0.003050928
                    A B C D   0  0  10  90
                    TP=0.13330   MASS RAIN=-1
PRINT HYD           ID=2  CODE=1
*
COMPUTE NM HYD      ID=3  HYD=A  DA=0.000885059
                    A B C D   0  0  2  98
                    TP=0.13330   MASS RAIN=-1
PRINT HYD           ID=3  CODE=1
*
COMPUTE NM HYD      ID=4  HYD=B  DA=0.000822449
                    A B C D   0  0  2  98
                    TP=0.13330   MASS RAIN=-1
PRINT HYD           ID=4  CODE=1
*
*Add basins A B basin-routing
ADD HYD             ID=5  HYD=A_B  ID=3  ID=4
PRINT HYD           ID=5  CODE=1
*
*Add basins XV DetPondOut basin-routing
ADD HYD             ID=6  HYD=XV_DetPondOut  ID=1  ID=2
PRINT HYD           ID=6  CODE=1
*
*Add basins A B XV DetPondOut basin-routing
ADD HYD             ID=7  HYD=XV_DetPondOut_A_B  ID=5  ID=6
PRINT HYD           ID=7  CODE=1
*
FINISH
```

```
    AHYMO PROGRAM SUMMARY TABLE (AHYMO-S4)                        - Ver. S4.01a,
Rel: 01a      RUN DATE (MON/DAY/YR) =07/07/2020
    INPUT FILE = C:\Users\Public\AHYMOdata\AHYMO input 7-7-20_MC.txt
         USER NO.= MolzenCorSingleA36115542

                                  FROM  TO                    PEAK         RUNOFF
           TIME TO    CFS      PAGE =   1
                      HYDROGRAPH   ID   ID         AREA     DISCHARGE      VOLUME
  RUNOFF     PEAK     PER
    COMMAND       IDENTIFICATION   NO.  NO.      (SQ MI)      (CFS)        (AC-FT)
 (INCHES)  (HOURS)    ACRE     NOTATION

    *S Sunport Boulevard extension by Jonah Ruybalid  NOV 19 2019
    START
                            TIME=      0.00
    *S 100-YEAR, 24-HOUR STORM EVENT- ZONE 2
    RAINFALL  TYPE= 2 NOAA 14
                            RAIN24=   2.590
    SEDIMENT BULK
                            PK BF =    1.10
    COMPUTE NM HYD            XF   -     1       0.00379         6.50       0.209
  1.03092    1.500    2.677 PER IMP=  10.00
    COMPUTE NM HYD           XE1   -     2       0.00005         0.12       0.004
  1.35843    1.500    3.891 PER IMP=  15.00
    COMPUTE NM HYD           XE2   -     3       0.00003         0.07       0.002
  1.42997    1.500    4.021 PER IMP=  20.00
    ADD HYD               XF_XE2  1& 3   4       0.00382         6.57       0.210
  1.03277    1.500    2.686
    COMPUTE NM HYD           XE3   -     5       0.00369         4.73       0.143
  0.72397    1.550    2.003 PER IMP=   0.00
    COMPUTE NM HYD           XD3   -     6       0.00174         3.51       0.109
  1.17561    1.500    3.158 PER IMP=  10.00
    COMPUTE NM HYD           XD4   -     7       0.00021         0.52       0.018
  1.57304    1.500    3.863 PER IMP=  30.00
    ADD HYD              XD3_XD4  6& 7   8       0.00195         4.03       0.126
  1.21237    1.500    3.234
    ADD HYD         XD3_XD4_XE2_  4& 8   9       0.00577        10.60       0.336
  1.09342    1.500    2.871
    COMPUTE NM HYD           XD5   -    10       0.00233         4.36       0.125
  1.00639    1.500    2.929 PER IMP=   0.00
    COMPUTE NM HYD            H3   -    11       0.00028         0.87       0.039
  2.57457    1.500    4.786 PER IMP= 100.00
    COMPUTE NM HYD            H4   -    12       0.00122         3.71       0.168
  2.57457    1.500    4.747 PER IMP= 100.00
    ADD HYD                H3_H4 11&12  13       0.00151         4.58       0.207
  2.57427    1.500    4.754
    COMPUTE NM HYD            I3   -    14       0.00131         3.98       0.180
  2.57457    1.500    4.747 PER IMP= 100.00
    ADD HYD             I3_H3_H4 13&14  15       0.00281         8.56       0.386
  2.57430    1.500    4.751
```

```
  COMPUTE NM HYD            I4   -    16       0.00059         1.80       0.081
2.57457    1.500    4.762 PER IMP= 100.00
  ADD HYD         WQPondInS(I4 15&16  17       0.00340        10.35       0.467
2.57428    1.500    4.753
  ADD HYD         I4_I3_H3_H4_  2&17  18       0.00345        10.48       0.471
2.55558    1.500    4.741
  ADD HYD              XE2_XD5  5&10  19       0.00602         9.09       0.268
0.83313    1.500    2.360
  ROUTE RESERVOIR    WQPondOut   18   20       0.00345         7.74       0.467
2.53741    1.600    3.504 AC-FT=    0.199
  COMPUTE NM HYD           XD1   -     1       0.00156         3.19       0.103
1.23551    1.500    3.194 PER IMP=  15.00
  COMPUTE NM HYD           XD2   -     2       0.00165         3.40       0.114
1.29606    1.500    3.220 PER IMP=  20.00
  COMPUTE NM HYD            M4   -     3       0.00035         1.07       0.048
2.57457    1.500    4.776 PER IMP= 100.00
  COMPUTE NM HYD            M3   -     4       0.00033         1.02       0.046
2.57457    1.500    4.776 PER IMP= 100.00
  COMPUTE NM HYD           XM2   -     5       0.00105         2.46       0.082
1.45858    1.500    3.658 PER IMP=  22.00
  COMPUTE NM HYD           XM1   -     6       0.00057         1.47       0.055
1.78766    1.500    4.004 PER IMP=  45.00
  COMPUTE NM HYD            M1   -     7       0.00186         4.74       0.184
1.85834    1.500    3.989 PER IMP=  52.00
  COMPUTE NM HYD            M2   -     8       0.00061         1.85       0.083
2.57457    1.500    4.757 PER IMP= 100.00
  ADD HYD               XD1_M4  1& 3   9       0.00191         4.26       0.151
1.48086    1.500    3.484
  ADD HYD               XD2_M3  2& 4  10       0.00198         4.42       0.160
1.51067    1.500    3.482
  ADD HYD           XM2_XD2_M3  5&10  11       0.00303         6.88       0.241
1.49237    1.500    3.543
  ADD HYD         XM2_XD2_M3_X  9&11  12       0.00494        11.14       0.392
1.48792    1.500    3.520
  ADD HYD               M1_XM1  6& 7  13       0.00243         6.20       0.238
1.84144    1.500    3.992
  COMPUTE NM HYD             N   -    14       0.00368         7.23       0.207
1.05739    1.500    3.069 PER IMP=   0.00
  ADD HYD         N_XM2_XD2_M3 12&14  15       0.00862        18.37       0.600
1.30426    1.500    3.328
  ADD HYD            M1_XM1_M2  8&13  16       0.00304         8.05       0.322
1.98804    1.500    4.145
  ADD HYD             woodward 15&16  17       0.01166        26.42       0.922
1.48230    1.500    3.541
  COMPUTE NM HYD            I1   -    18       0.00062         1.89       0.085
2.57457    1.500    4.757 PER IMP= 100.00
  COMPUTE NM HYD            I2   -    19       0.00025         0.76       0.034
2.57457    1.500    4.786 PER IMP= 100.00
  ADD HYD                I2_I1 18&19  20       0.00087         2.65       0.119
2.57402    1.500    4.765
```

```
  COMPUTE NM HYD            H2   -     1       0.00054         1.65       0.074
 2.57457    1.500    4.762 PER IMP= 100.00
  ADD HYD             H2_I2_I1 20& 1   2       0.00141         4.30       0.194
 2.57407    1.500    4.764
  COMPUTE NM HYD            H1   -     3       0.00025         0.78       0.035
 2.57457    1.500    4.786 PER IMP= 100.00
  ADD HYD          H1_H2_I2_I1  2& 3   4       0.00166         5.08       0.229
 2.57396    1.500    4.767
```

```
                                FROM  TO                    PEAK         RUNOFF
         TIME TO    CFS      PAGE =   2
                    HYDROGRAPH   ID   ID         AREA     DISCHARGE      VOLUME
 RUNOFF     PEAK     PER
  COMMAND       IDENTIFICATION   NO.  NO.      (SQ MI)      (CFS)        (AC-FT)
(INCHES)  (HOURS)    ACRE     NOTATION

  COMPUTE NM HYD             H   -     5       0.00066         2.02       0.091
 2.57457    1.500    4.757 PER IMP= 100.00
  ADD HYD         H_H1_H2_I2_I  4& 5   6       0.00233         7.10       0.320
 2.57405    1.500    4.764
  COMPUTE NM HYD             I   -     7       0.00064         1.95       0.088
 2.57457    1.500    4.757 PER IMP= 100.00
  ADD HYD         I_H_H1_H2_I2  6& 7   8       0.00297         9.05       0.408
 2.57410    1.500    4.763
  ADD HYD           DetPondInE 17& 8  21       0.01463        35.47       1.330
 1.70400    1.500    3.789
  COMPUTE NM HYD             P   -     9       0.00047         1.43       0.064
 2.57457    1.500    4.768 PER IMP= 100.00
  COMPUTE NM HYD             S   -    10       0.00044         1.36       0.061
 2.57457    1.500    4.768 PER IMP= 100.00
  ADD HYD                  S_P  9&10  11       0.00091         2.79       0.125
 2.57416    1.500    4.768
  COMPUTE NM HYD            P1   -    12       0.00097         2.86       0.125
 2.43150    1.500    4.624 PER IMP=  90.00
  COMPUTE NM HYD            S1   -    13       0.00058         1.72       0.075
 2.43150    1.500    4.642 PER IMP=  90.00
  ADD HYD                S1_P1 12&13  14       0.00155         4.58       0.200
 2.43119    1.500    4.631
  ADD HYD            S1_P1_S_P 11&14  15       0.00246         7.37       0.326
 2.48428    1.500    4.682
  COMPUTE NM HYD             T   -    16       0.00126         3.83       0.173
 2.57457    1.500    4.747 PER IMP= 100.00
  ADD HYD          T_S1_P1_S_P 15&16  17       0.00372        11.20       0.499
 2.51483    1.500    4.704
  COMPUTE NM HYD            Q1   -    18       0.00019         0.58       0.025
 2.43150    1.500    4.705 PER IMP=  90.00
  COMPUTE NM HYD            R1   -    19       0.00030         0.91       0.039
 2.43150    1.500    4.680 PER IMP=  90.00
  ADD HYD                Q1_R1 18&19  20       0.00050         1.49       0.064
 2.42693    1.500    4.690
```

```
  COMPUTE NM HYD             Q   -     1       0.00079         2.37       0.104
2.46011    1.500    4.661 PER IMP=  92.00
  COMPUTE NM HYD             R   -     2       0.00058         1.73       0.076
2.43150    1.500    4.642 PER IMP=  90.00
  ADD HYD                  Q_R  1& 2   3       0.00138         4.10       0.180
2.44768    1.500    4.653
  ADD HYD            Q_R_Q1_R1 20& 3   4       0.00187         5.59       0.244
2.44217    1.500    4.663
  ADD HYD             broadway 17& 4   5       0.00559        16.79       0.743
2.49050    1.500    4.690
  COMPUTE NM HYD            XC   -     6       0.00440        10.16       0.336
1.42997    1.500    3.608 PER IMP=  20.00
  ADD HYD             broadway  5& 6   7       0.00999        26.95       1.079
2.02344    1.500    4.214
  COMPUTE NM HYD             D   -     8       0.00032         0.97       0.044
2.57457    1.500    4.776 PER IMP= 100.00
  COMPUTE NM HYD             C   -     9       0.00038         1.15       0.052
2.57457    1.500    4.768 PER IMP= 100.00
  ADD HYD                  D_C  8& 9  10       0.00070         2.12       0.095
2.57406    1.500    4.772
  ADD HYD             Broadway  7&10  11       0.01069        29.07       1.174
2.05925    1.500    4.250
  COMPUTE NM HYD            G1   -    12       0.00124         3.76       0.170
2.57457    1.500    4.747 PER IMP= 100.00
  COMPUTE NM HYD             G   -    13       0.00107         3.25       0.147
2.57457    1.500    4.750 PER IMP= 100.00
  ADD HYD                 G1_G 12&13  14       0.00231         7.01       0.317
2.57435    1.500    4.748
  ADD HYD           DetPondInW 11&14  15       0.01300        36.08       1.491
2.15065    1.500    4.338
  ADD HYD          DetPondInSS 21&15  16       0.02762        71.56       2.820
1.91411    1.500    4.047
  COMPUTE NM HYD            XJ   -    17       0.00755        12.48       0.364
0.90246    1.500    2.581 PER IMP=   0.00
  COMPUTE NM HYD           XJ1   -    18       0.01045        18.34       0.528
0.94796    1.500    2.742 PER IMP=   0.00
  ADD HYD               XJ1_XJ 17&18  19       0.01800        30.82       0.892
0.92886    1.500    2.674
  ADD HYD            DetPondIn 16&19  20       0.04563       102.37       3.712
1.52536    1.500    3.506
  ROUTE RESERVOIR   DetPondOut   20    1       0.04563         4.48       3.712
1.52535    2.300    0.154 AC-FT=    2.946
  COMPUTE NM HYD            XV   -     2       0.00305         8.99       0.396
2.43150    1.500    4.605 PER IMP=  90.00
  COMPUTE NM HYD             A   -     3       0.00089         2.68       0.120
2.54596    1.500    4.732 PER IMP=  98.00
  COMPUTE NM HYD             B   -     4       0.00082         2.49       0.112
2.54596    1.500    4.732 PER IMP=  98.00
  ADD HYD                  A_B  3& 4   5       0.00171         5.17       0.232
2.54566    1.500    4.732
```

```
  ADD HYD         XV_DetPondOu  1& 2   6       0.04868        10.04       4.106
1.58161    1.550    0.322
  ADD HYD         XV_DetPondOu  5& 6   7       0.05039        15.10       4.338
1.61428    1.500    0.468
  FINISH
```

```
        AHYMO PROGRAM (AHYMO-S4)                    - Version: S4.01a - Rel: 01a
             RUN DATE (MON/DAY/YR) = 07/07/2020
             START TIME (HR:MIN:SEC) = 17:52:22     USER NO.=
MolzenCorSingleA36115542
             INPUT FILE = C:\Users\Public\AHYMOdata\AHYMO input 7-7-20_MC.txt


    *S Sunport Boulevard extension by Jonah Ruybalid  NOV 19 2019
    *
    START               TIME=0.0 HR  PUNCH CODE=0
    *S 100-YEAR, 24-HOUR STORM EVENT- ZONE 2
    RAINFALL            TYPE=2  QUARTER HR RAIN=0.00  ONE HR RAIN=1.80
                       SIX HR RAIN=2.24  DAILY RAIN=2.59 DT=0.05 HR

                  24-HOUR RAINFALL DIST. - BASED ON NOAA ATLAS 14 FOR CONVECTIVE
AREAS (NM & AZ) - D1
                  DT =   0.050000 HOURS       END TIME =    24.000002 HOURS
                    0.0000  0.0029  0.0060  0.0092  0.0127  0.0163  0.0204
                    0.0262  0.0352  0.0450  0.0551  0.0661  0.0773  0.0888
                    0.1007  0.1128  0.1263  0.1404  0.1556  0.1780  0.2040
                    0.2389  0.2784  0.3272  0.3923  0.4656  0.5921  0.7888
                    1.1258  1.3627  1.5495  1.6433  1.7256  1.7847  1.8318
                    1.8728  1.9028  1.9303  1.9531  1.9702  1.9844  1.9972
                    2.0092  2.0197  2.0297  2.0395  2.0488  2.0565  2.0610
                    2.0653  2.0696  2.0735  2.0775  2.0813  2.0851  2.0889
                    2.0924  2.0959  2.0993  2.1026  2.1060  2.1091  2.1122
                    2.1153  2.1184  2.1214  2.1242  2.1271  2.1299  2.1326
                    2.1354  2.1380  2.1407  2.1433  2.1459  2.1485  2.1510
                    2.1535  2.1560  2.1584  2.1608  2.1632  2.1656  2.1679
                    2.1702  2.1725  2.1747  2.1770  2.1792  2.1814  2.1835
                    2.1857  2.1878  2.1899  2.1920  2.1940  2.1961  2.1981
                    2.2001  2.2021  2.2040  2.2060  2.2079  2.2098  2.2117
                    2.2136  2.2155  2.2173  2.2191  2.2210  2.2228  2.2245
                    2.2263  2.2281  2.2298  2.2316  2.2333  2.2350  2.2367
                    2.2383  2.2400  2.2417  2.2433  2.2450  2.2466  2.2483
                    2.2499  2.2516  2.2532  2.2548  2.2565  2.2581  2.2597
                    2.2613  2.2629  2.2646  2.2662  2.2678  2.2694  2.2710
                    2.2726  2.2741  2.2757  2.2773  2.2789  2.2805  2.2820
                    2.2836  2.2852  2.2867  2.2883  2.2898  2.2914  2.2929
                    2.2945  2.2960  2.2975  2.2991  2.3006  2.3021  2.3036
                    2.3051  2.3066  2.3081  2.3096  2.3111  2.3126  2.3141
                    2.3156  2.3171  2.3186  2.3200  2.3215  2.3230  2.3244
                    2.3259  2.3274  2.3288  2.3303  2.3317  2.3331  2.3346
                    2.3360  2.3374  2.3389  2.3403  2.3417  2.3431  2.3445
                    2.3459  2.3473  2.3487  2.3501  2.3515  2.3529  2.3543
                    2.3557  2.3570  2.3584  2.3598  2.3611  2.3625  2.3639
                    2.3652  2.3666  2.3679  2.3692  2.3706  2.3719  2.3732
                    2.3746  2.3759  2.3772  2.3785  2.3798  2.3811  2.3824
                    2.3837  2.3850  2.3863  2.3876  2.3889  2.3902  2.3914
```

```
                    2.3927  2.3940  2.3952  2.3965  2.3978  2.3990  2.4003
                    2.4015  2.4027  2.4040  2.4052  2.4064  2.4077  2.4089
                    2.4101  2.4113  2.4125  2.4137  2.4149  2.4161  2.4173
                    2.4185  2.4197  2.4209  2.4221  2.4232  2.4244  2.4256
                    2.4267  2.4279  2.4290  2.4302  2.4313  2.4325  2.4336
                    2.4348  2.4359  2.4370  2.4381  2.4393  2.4404  2.4415
                    2.4426  2.4437  2.4448  2.4459  2.4470  2.4481  2.4492
                    2.4503  2.4513  2.4524  2.4535  2.4545  2.4556  2.4567
                    2.4577  2.4588  2.4598  2.4609  2.4619  2.4629  2.4640
                    2.4650  2.4660  2.4670  2.4680  2.4691  2.4701  2.4711
                    2.4721  2.4731  2.4740  2.4750  2.4760  2.4770  2.4780
                    2.4789  2.4799  2.4809  2.4818  2.4828  2.4838  2.4847
                    2.4856  2.4866  2.4875  2.4885  2.4894  2.4903  2.4912
                    2.4922  2.4931  2.4940  2.4949  2.4958  2.4967  2.4976
                    2.4985  2.4994  2.5002  2.5011  2.5020  2.5029  2.5037
                    2.5046  2.5055  2.5063  2.5072  2.5080  2.5088  2.5097
                    2.5105  2.5114  2.5122  2.5130  2.5138  2.5146  2.5155
                    2.5163  2.5171  2.5179  2.5187  2.5195  2.5202  2.5210
                    2.5218  2.5226  2.5234  2.5241  2.5249  2.5257  2.5264
                    2.5272  2.5279  2.5287  2.5294  2.5301  2.5309  2.5316
                    2.5323  2.5331  2.5338  2.5345  2.5352  2.5359  2.5366
                    2.5373  2.5380  2.5387  2.5394  2.5401  2.5408  2.5414
                    2.5421  2.5428  2.5434  2.5441  2.5447  2.5454  2.5460
                    2.5467  2.5473  2.5480  2.5486  2.5492  2.5499  2.5505
                    2.5511  2.5517  2.5523  2.5529  2.5535  2.5541  2.5547
                    2.5553  2.5559  2.5565  2.5570  2.5576  2.5582  2.5588
                    2.5593  2.5599  2.5604  2.5610  2.5615  2.5621  2.5626
                    2.5631  2.5637  2.5642  2.5647  2.5652  2.5658  2.5663
                    2.5668  2.5673  2.5678  2.5683  2.5688  2.5692  2.5697
                    2.5702  2.5707  2.5712  2.5716  2.5721  2.5725  2.5730
                    2.5735  2.5739  2.5743  2.5748  2.5752  2.5757  2.5761
                    2.5765  2.5769  2.5773  2.5778  2.5782  2.5786  2.5790
                    2.5794  2.5798  2.5802  2.5805  2.5809  2.5813  2.5817
                    2.5820  2.5824  2.5828  2.5831  2.5835  2.5838  2.5842
                    2.5845  2.5849  2.5852  2.5855  2.5858  2.5862  2.5865
                    2.5868  2.5871  2.5874  2.5877  2.5880  2.5883  2.5886
                    2.5889  2.5892  2.5895  2.5897  2.5900

* 10-YEAR, 24-HOUR STORM EVENT, - ZONE 2
*RAINFALL            TYPE=2  QUARTER HR RAIN=0.00  ONE HR RAIN=1.14
*                    SIX HR RAIN=1.47  DAILY RAIN=1.76 DT=0.05 HR
*
*****************************************************************************
SEDIMENT BULK       CODE = 1 BULK FACTOR = 1.10
*****************************************************************************
*PROPOSED SITE CONDITIONS
*
COMPUTE NM HYD      ID=1  HYD=XF  DA=0.003794
```

```
                        A B C D 30 40 20  10
                        TP=0.13330   MASS RAIN=-1

         K =  0.072649HR    TP =  0.133300HR    K/TP RATIO =  0.545000     SHAPE
CONSTANT, N =  7.106428
         UNIT PEAK =   1.4979    CFS   UNIT VOLUME =   0.9928       B =   526.28
 P60 = 1.8000
         AREA =     0.000379 SQ MI    IA =   0.10000 INCHES    INF =   0.04000
INCHES PER HOUR
         RUNOFF COMPUTED BY INITIAL ABSTRACTION/INFILTRATION NUMBER METHOD - DT =
0.050000


         K =  0.137266HR    TP =  0.133300HR    K/TP RATIO =  1.029753     SHAPE
CONSTANT, N =  3.427819
         UNIT PEAK =   8.0698    CFS   UNIT VOLUME =   0.9988       B =   315.03
 P60 = 1.8000
         AREA =     0.003415 SQ MI    IA =   0.51667 INCHES    INF =   1.29667
INCHES PER HOUR
         RUNOFF COMPUTED BY INITIAL ABSTRACTION/INFILTRATION NUMBER METHOD - DT =
0.050000

        BULKING FACTOR APPLIED TO HYDROGRAPH.  FACTOR =  1.10000 AT PEAK FLOW.

    PRINT HYD           ID=1  CODE=1

                                                HYDROGRAPH FROM AREA XF



        RUNOFF VOLUME =     1.03092 INCHES     =       0.2086 ACRE-FEET
        PEAK DISCHARGE RATE =       6.50 CFS  AT   1.500 HOURS   BASIN AREA =
0.0038 SQ. MI.



    *
    COMPUTE NM HYD      ID=2  HYD=XE1  DA=0.0.0004978
                        A B C D  0  0  85  15
                        TP=0.13330   MASS RAIN=-1

         K =  0.072649HR    TP =  0.133300HR    K/TP RATIO =  0.545000     SHAPE
CONSTANT, N =  7.106428
         UNIT PEAK =  0.29480E-01CFS   UNIT VOLUME =   0.8994       B =   526.28
 P60 = 1.8000
         AREA =     0.000007 SQ MI    IA =   0.10000 INCHES    INF =   0.04000
INCHES PER HOUR
         RUNOFF COMPUTED BY INITIAL ABSTRACTION/INFILTRATION NUMBER METHOD - DT =
0.050000
```

```
         K =  0.105077HR    TP =  0.133300HR    K/TP RATIO =  0.788276     SHAPE
CONSTANT, N =  4.552748
         UNIT PEAK =  0.12395    CFS   UNIT VOLUME =   0.9079       B =   390.48
 P60 = 1.8000
         AREA =     0.000042 SQ MI    IA =   0.35000 INCHES    INF =   0.83000
INCHES PER HOUR
         RUNOFF COMPUTED BY INITIAL ABSTRACTION/INFILTRATION NUMBER METHOD - DT =
0.050000

        BULKING FACTOR APPLIED TO HYDROGRAPH.  FACTOR =  1.10000 AT PEAK FLOW.

    PRINT HYD           ID=2  CODE=1

                                                HYDROGRAPH FROM AREA XE1



        RUNOFF VOLUME =     1.35843 INCHES     =       0.0036 ACRE-FEET
        PEAK DISCHARGE RATE =       0.12 CFS  AT   1.500 HOURS   BASIN AREA =
0.0000 SQ. MI.



    *
    COMPUTE NM HYD      ID=3  HYD=XE2  DA=0.0.0002535
                        A B C D  0  0  80  20
                        TP=0.13330   MASS RAIN=-1

         K =  0.072649HR    TP =  0.133300HR    K/TP RATIO =  0.545000     SHAPE
CONSTANT, N =  7.106428
         UNIT PEAK =  0.20017E-01CFS   UNIT VOLUME =   0.8994       B =   526.28
 P60 = 1.8000
         AREA =     0.000005 SQ MI    IA =   0.10000 INCHES    INF =   0.04000
INCHES PER HOUR
         RUNOFF COMPUTED BY INITIAL ABSTRACTION/INFILTRATION NUMBER METHOD - DT =
0.050000


         K =  0.105077HR    TP =  0.133300HR    K/TP RATIO =  0.788276     SHAPE
CONSTANT, N =  4.552748
         UNIT PEAK =  0.59407E-01CFS   UNIT VOLUME =   0.8918       B =   390.48
 P60 = 1.8000
         AREA =     0.000020 SQ MI    IA =   0.35000 INCHES    INF =   0.83000
INCHES PER HOUR
         RUNOFF COMPUTED BY INITIAL ABSTRACTION/INFILTRATION NUMBER METHOD - DT =
0.050000

        BULKING FACTOR APPLIED TO HYDROGRAPH.  FACTOR =  1.10000 AT PEAK FLOW.
```

```
    PRINT HYD           ID=3  CODE=1

                                                HYDROGRAPH FROM AREA XE2



        RUNOFF VOLUME =     1.42997 INCHES     =       0.0019 ACRE-FEET
        PEAK DISCHARGE RATE =       0.07 CFS  AT   1.500 HOURS   BASIN AREA =
0.0000 SQ. MI.



    *
    *Add basins XF and XE2 basin-routing
    ADD HYD             ID=4  HYD=XF_XE2  ID=1  ID=3
    PRINT HYD           ID=4  CODE=1

                                                HYDROGRAPH FROM AREA XF_XE2



        RUNOFF VOLUME =     1.03277 INCHES     =       0.2104 ACRE-FEET
        PEAK DISCHARGE RATE =       6.57 CFS  AT   1.500 HOURS   BASIN AREA =
0.0038 SQ. MI.



    *
    COMPUTE NM HYD      ID=5  HYD=XE3  DA=0.003694
                        A B C D  86  0  14  0
                        TP=0.13330   MASS RAIN=-1

         K =  0.156997HR    TP =  0.133300HR    K/TP RATIO =  1.177768     SHAPE
CONSTANT, N =  3.012561
         UNIT PEAK =   7.8383    CFS   UNIT VOLUME =   0.9972       B =   282.85
 P60 = 1.8000
         AREA =     0.003694 SQ MI    IA =   0.60800 INCHES    INF =   1.55240
INCHES PER HOUR
         RUNOFF COMPUTED BY INITIAL ABSTRACTION/INFILTRATION NUMBER METHOD - DT =
0.050000

        BULKING FACTOR APPLIED TO HYDROGRAPH.  FACTOR =  1.10000 AT PEAK FLOW.

    PRINT HYD           ID=5  CODE=1

                                                HYDROGRAPH FROM AREA XE3



        RUNOFF VOLUME =     0.72397 INCHES     =       0.1426 ACRE-FEET
```

```
        PEAK DISCHARGE RATE =       4.73 CFS  AT   1.550 HOURS   BASIN AREA =
0.0037 SQ. MI.



    *
    COMPUTE NM HYD      ID=6  HYD=XD3  DA=0.0017353
                        A B C D  0  40  50  10
                        TP=0.13330   MASS RAIN=-1

         K =  0.072649HR    TP =  0.133300HR    K/TP RATIO =  0.545000     SHAPE
CONSTANT, N =  7.106428
         UNIT PEAK =  0.68511    CFS   UNIT VOLUME =   0.9832       B =   526.28
 P60 = 1.8000
         AREA =     0.000174 SQ MI    IA =   0.10000 INCHES    INF =   0.04000
INCHES PER HOUR
         RUNOFF COMPUTED BY INITIAL ABSTRACTION/INFILTRATION NUMBER METHOD - DT =
0.050000


         K =  0.117142HR    TP =  0.133300HR    K/TP RATIO =  0.878787     SHAPE
CONSTANT, N =  4.039515
         UNIT PEAK =   4.1920    CFS   UNIT VOLUME =   0.9983       B =   357.80
 P60 = 1.8000
         AREA =     0.001562 SQ MI    IA =   0.41667 INCHES    INF =   1.01667
INCHES PER HOUR
         RUNOFF COMPUTED BY INITIAL ABSTRACTION/INFILTRATION NUMBER METHOD - DT =
0.050000

        BULKING FACTOR APPLIED TO HYDROGRAPH.  FACTOR =  1.10000 AT PEAK FLOW.

    PRINT HYD           ID=6  CODE=1

                                                HYDROGRAPH FROM AREA XD3



        RUNOFF VOLUME =     1.17561 INCHES     =       0.1088 ACRE-FEET
        PEAK DISCHARGE RATE =       3.51 CFS  AT   1.500 HOURS   BASIN AREA =
0.0017 SQ. MI.



    *
    COMPUTE NM HYD      ID=7  HYD=XD4  DA=0.00021196
                        A B C D  0  0  70  30
                        TP=0.13330   MASS RAIN=-1

         K =  0.072649HR    TP =  0.133300HR    K/TP RATIO =  0.545000     SHAPE
CONSTANT, N =  7.106428
```

```
         UNIT PEAK =  0.25105    CFS   UNIT VOLUME =   0.9593       B =   526.28
 P60 = 1.8000
         AREA =     0.000064 SQ MI    IA =   0.10000 INCHES    INF =   0.04000
INCHES PER HOUR
         RUNOFF COMPUTED BY INITIAL ABSTRACTION/INFILTRATION NUMBER METHOD - DT =
0.050000


         K =  0.105077HR    TP =  0.133300HR    K/TP RATIO =  0.788276     SHAPE
CONSTANT, N =  4.552748
         UNIT PEAK =  0.43463    CFS   UNIT VOLUME =   0.9753       B =   390.48
 P60 = 1.8000
         AREA =     0.000148 SQ MI    IA =   0.35000 INCHES    INF =   0.83000
INCHES PER HOUR
         RUNOFF COMPUTED BY INITIAL ABSTRACTION/INFILTRATION NUMBER METHOD - DT =
0.050000

        BULKING FACTOR APPLIED TO HYDROGRAPH.  FACTOR =  1.10000 AT PEAK FLOW.

    PRINT HYD           ID=7  CODE=1

                                                HYDROGRAPH FROM AREA XD4



        RUNOFF VOLUME =     1.57304 INCHES     =       0.0178 ACRE-FEET
        PEAK DISCHARGE RATE =       0.52 CFS  AT   1.500 HOURS   BASIN AREA =
0.0002 SQ. MI.



    *
    *Add basins XD3 and XD4 basin-routing
    ADD HYD             ID=8  HYD=XD3_XD4  ID=6  ID=7
    PRINT HYD           ID=8  CODE=1

                                                HYDROGRAPH FROM AREA XD3_XD4



        RUNOFF VOLUME =     1.21237 INCHES     =       0.1259 ACRE-FEET
        PEAK DISCHARGE RATE =       4.03 CFS  AT   1.500 HOURS   BASIN AREA =
0.0019 SQ. MI.



    *
    *Add basins XD3, XD4, XE2, XF basin-routing
    ADD HYD             ID=9  HYD=XD3_XD4_XE2_XF  ID=4  ID=8
    PRINT HYD           ID=9  CODE=1
```

HYDROGRAPH FROM AREA XD3_XD4_XE2_XF

RUNOFF VOLUME = 1.09342 INCHES = 0.3363 ACRE-FEET
PEAK DISCHARGE RATE = 10.60 CFS AT 1.500 HOURS BASIN AREA = 0.0058 SQ. MI.

```
*
COMPUTE NM HYD      ID=10  HYD=XD5  DA=0.002328
                    A B C D  0  50  50  0
                    TP=0.13330   MASS RAIN=-1
```

K = 0.118650HR TP = 0.133300HR K/TP RATIO = 0.890100 SHAPE CONSTANT, N = 3.984395
UNIT PEAK = 6.1847 CFS UNIT VOLUME = 0.9990 B = 354.13 P60 = 1.8000
AREA = 0.002328 SQ MI IA = 0.42500 INCHES INF = 1.04000 INCHES PER HOUR
RUNOFF COMPUTED BY INITIAL ABSTRACTION/INFILTRATION NUMBER METHOD - DT = 0.050000

BULKING FACTOR APPLIED TO HYDROGRAPH. FACTOR = 1.10000 AT PEAK FLOW.

```
PRINT HYD           ID=10  CODE=1
```

HYDROGRAPH FROM AREA XD5

RUNOFF VOLUME = 1.00639 INCHES = 0.1250 ACRE-FEET
PEAK DISCHARGE RATE = 4.36 CFS AT 1.500 HOURS BASIN AREA = 0.0023 SQ. MI.

```
*
COMPUTE NM HYD      ID=11  HYD=H3  DA=0.000283628
                    A B C D  0  0  0  100
                    TP=0.13330   MASS RAIN=-1
```

K = 0.072649HR TP = 0.133300HR K/TP RATIO = 0.545000 SHAPE CONSTANT, N = 7.106428
UNIT PEAK = 1.1198 CFS UNIT VOLUME = 0.9891 B = 526.28 P60 = 1.8000
AREA = 0.000284 SQ MI IA = 0.10000 INCHES INF = 0.04000 INCHES PER HOUR

```
         RUNOFF COMPUTED BY INITIAL ABSTRACTION/INFILTRATION NUMBER METHOD - DT =
0.050000

        BULKING FACTOR APPLIED TO HYDROGRAPH.  FACTOR =  1.10000 AT PEAK FLOW.

    PRINT HYD           ID=11  CODE=1

                                                HYDROGRAPH FROM AREA H3



        RUNOFF VOLUME =     2.57457 INCHES     =       0.0389 ACRE-FEET
        PEAK DISCHARGE RATE =       0.87 CFS  AT   1.500 HOURS   BASIN AREA =
0.0003 SQ. MI.



    *
    COMPUTE NM HYD      ID=12  HYD=H4  DA=0.0012214
                        A B C D  0  0  0  100
                        TP=0.13330   MASS RAIN=-1

         K =  0.072649HR    TP =  0.133300HR    K/TP RATIO =  0.545000     SHAPE
CONSTANT, N =  7.106428
         UNIT PEAK =   4.8222    CFS   UNIT VOLUME =   0.9971       B =   526.28
 P60 = 1.8000
         AREA =     0.001221 SQ MI    IA =   0.10000 INCHES    INF =   0.04000
INCHES PER HOUR
         RUNOFF COMPUTED BY INITIAL ABSTRACTION/INFILTRATION NUMBER METHOD - DT =
0.050000

        BULKING FACTOR APPLIED TO HYDROGRAPH.  FACTOR =  1.10000 AT PEAK FLOW.

    PRINT HYD           ID=12  CODE=1

                                                HYDROGRAPH FROM AREA H4



        RUNOFF VOLUME =     2.57457 INCHES     =       0.1677 ACRE-FEET
        PEAK DISCHARGE RATE =       3.71 CFS  AT   1.500 HOURS   BASIN AREA =
0.0012 SQ. MI.



    *
    *Add basins H3 and H4 basin-routing
    ADD HYD             ID=13  HYD=H3_H4  ID=11  ID=12
    PRINT HYD           ID=13  CODE=1
```

```
                                                HYDROGRAPH FROM AREA H3_H4


        RUNOFF VOLUME =     2.57427 INCHES     =       0.2066 ACRE-FEET
        PEAK DISCHARGE RATE =       4.58 CFS  AT   1.500 HOURS   BASIN AREA =
0.0015 SQ. MI.



    *
    COMPUTE NM HYD      ID=14  HYD=I3  DA=0.0013089
                        A B C D  0  0  0  100
                        TP=0.13330   MASS RAIN=-1

         K =  0.072649HR    TP =  0.133300HR    K/TP RATIO =  0.545000     SHAPE
CONSTANT, N =  7.106428
         UNIT PEAK =   5.1676    CFS   UNIT VOLUME =   0.9971       B =   526.28
 P60 = 1.8000
         AREA =     0.001309 SQ MI    IA =   0.10000 INCHES    INF =   0.04000
INCHES PER HOUR
         RUNOFF COMPUTED BY INITIAL ABSTRACTION/INFILTRATION NUMBER METHOD - DT =
0.050000

        BULKING FACTOR APPLIED TO HYDROGRAPH.  FACTOR =  1.10000 AT PEAK FLOW.

    PRINT HYD           ID=14  CODE=1

                                                HYDROGRAPH FROM AREA I3



        RUNOFF VOLUME =     2.57457 INCHES     =       0.1797 ACRE-FEET
        PEAK DISCHARGE RATE =       3.98 CFS  AT   1.500 HOURS   BASIN AREA =
0.0013 SQ. MI.



    *
    *Add basins I3 H3 H4 basin-routing
    ADD HYD             ID=15  HYD=I3_H3_H4  ID=13  ID=14
    PRINT HYD           ID=15  CODE=1

                                                HYDROGRAPH FROM AREA I3_H3_H4


        RUNOFF VOLUME =     2.57430 INCHES     =       0.3863 ACRE-FEET
        PEAK DISCHARGE RATE =       8.56 CFS  AT   1.500 HOURS   BASIN AREA =
0.0028 SQ. MI.
```

```
    *
    COMPUTE NM HYD      ID=16  HYD=I4  DA=0.000589138
                        A B C D  0  0  0  100
                        TP=0.13330   MASS RAIN=-1

         K =  0.072649HR    TP =  0.133300HR    K/TP RATIO =  0.545000     SHAPE
CONSTANT, N =  7.106428
         UNIT PEAK =   2.3259    CFS   UNIT VOLUME =   0.9941       B =   526.28
 P60 = 1.8000
         AREA =     0.000589 SQ MI    IA =   0.10000 INCHES    INF =   0.04000
INCHES PER HOUR
         RUNOFF COMPUTED BY INITIAL ABSTRACTION/INFILTRATION NUMBER METHOD - DT =
0.050000

        BULKING FACTOR APPLIED TO HYDROGRAPH.  FACTOR =  1.10000 AT PEAK FLOW.

    PRINT HYD           ID=16  CODE=1

                                                HYDROGRAPH FROM AREA I4



        RUNOFF VOLUME =     2.57457 INCHES     =       0.0809 ACRE-FEET
        PEAK DISCHARGE RATE =       1.80 CFS  AT   1.500 HOURS   BASIN AREA =
0.0006 SQ. MI.



    *
    *Add basins I4 I3 H3 H4 basin-routing
    ADD HYD             ID=17  HYD=WQPondInS(I4_I3_H3_H4)  ID=15  ID=16
    PRINT HYD           ID=17  CODE=1

                                                HYDROGRAPH FROM AREA
WQPondInS(I4_I3_H3_H4


        RUNOFF VOLUME =     2.57428 INCHES     =       0.4672 ACRE-FEET
        PEAK DISCHARGE RATE =      10.35 CFS  AT   1.500 HOURS   BASIN AREA =
0.0034 SQ. MI.



    *
    *Add basins I4 I3 H3 H4 XE1 basin-routing WQPondIn
    ADD HYD             ID=18  HYD=I4_I3_H3_H4_XE1  ID=2  ID=17
    PRINT HYD           ID=18  CODE=1
```

HYDROGRAPH FROM AREA I4_I3_H3_H4_XE1

RUNOFF VOLUME = 2.55558 INCHES = 0.4706 ACRE-FEET
PEAK DISCHARGE RATE = 10.48 CFS AT 1.500 HOURS BASIN AREA = 0.0035 SQ. MI.

```
*
*Add basins XE2 and XD5 basin-routing SDC in overland
ADD HYD             ID=19  HYD=XE2_XD5  ID=5  ID=10
PRINT HYD           ID=19  CODE=1
```

HYDROGRAPH FROM AREA XE2_XD5

RUNOFF VOLUME = 0.83313 INCHES = 0.2676 ACRE-FEET
PEAK DISCHARGE RATE = 9.09 CFS AT 1.500 HOURS BASIN AREA = 0.0060 SQ. MI.

```
*
* Water Quality Pond outflows over weir to south diversion channel
ROUTE RESERVOIR     ID=20  HYD=WQPondOut  INFLOW ID=18  CODE=5
                       OUTFLOW(cfs)   STORAGE(ac ft)    ELEV(ft)
                       0.000           0.0             5000.4
                       0.010           0.0336          5001.0
                       0.010           0.1012          5002.0
                       1.700           0.1879          5003.0
                      61.200           0.2954          5004.0
                     224.200           0.5023          5005.0
                     502.900           0.7324          5006.0
                     912.800           0.9827          5007.0
                    1000.000          10.0000          5008.0
```

* * * * * * * * * * * * * * * * *

TIME (HRS)	INFLOW (CFS)	ELEV (FEET)	VOLUME (AC-FT)	OUTFLOW (CFS)
0.00	0.00	5000.40	0.000	0.00
0.25	0.00	5000.40	0.000	0.00
0.50	0.00	5000.40	0.000	0.00
0.75	0.02	5000.40	0.000	0.00
1.00	0.64	5000.53	0.007	0.00

1.25	2.10	5000.99	0.033	0.01
1.50	10.48	5002.49	0.144	0.84
1.75	3.85	5003.04	0.193	4.27
2.00	1.54	5003.00	0.188	1.70
2.25	0.67	5002.86	0.176	1.46
2.50	0.28	5002.67	0.159	1.14
2.75	0.12	5002.48	0.143	0.82
3.00	0.08	5002.34	0.130	0.58
3.25	0.06	5002.24	0.122	0.41
3.50	0.05	5002.17	0.116	0.29
3.75	0.05	5002.12	0.112	0.21
4.00	0.05	5002.09	0.109	0.16
4.25	0.05	5002.07	0.107	0.13
4.50	0.06	5002.05	0.106	0.10
4.75	0.06	5002.05	0.105	0.09
5.00	0.06	5002.04	0.105	0.08
5.25	0.07	5002.04	0.104	0.07
5.50	0.07	5002.04	0.104	0.07
5.75	0.07	5002.04	0.104	0.07
6.00	0.08	5002.04	0.104	0.07
6.25	0.08	5002.04	0.105	0.08
6.50	0.08	5002.04	0.105	0.08
6.75	0.08	5002.04	0.105	0.08
7.00	0.08	5002.04	0.105	0.08
7.25	0.08	5002.04	0.105	0.08
7.50	0.08	5002.04	0.105	0.08
7.75	0.08	5002.04	0.105	0.08
8.00	0.07	5002.04	0.105	0.08
8.25	0.07	5002.04	0.105	0.07
8.50	0.07	5002.04	0.104	0.07
8.75	0.07	5002.04	0.104	0.07
9.00	0.07	5002.04	0.104	0.07
9.25	0.07	5002.04	0.104	0.07
9.50	0.07	5002.04	0.104	0.07
9.75	0.07	5002.04	0.104	0.07
10.00	0.07	5002.03	0.104	0.07
10.25	0.07	5002.03	0.104	0.07
10.50	0.06	5002.03	0.104	0.07
10.75	0.06	5002.03	0.104	0.07
11.00	0.06	5002.03	0.104	0.06
11.25	0.06	5002.03	0.104	0.06
11.50	0.06	5002.03	0.104	0.06
11.75	0.06	5002.03	0.104	0.06
12.00	0.06	5002.03	0.104	0.06
12.25	0.06	5002.03	0.104	0.06
12.50	0.06	5002.03	0.104	0.06
12.75	0.06	5002.03	0.104	0.06
13.00	0.06	5002.03	0.104	0.06
13.25	0.05	5002.03	0.104	0.06
13.50	0.05	5002.03	0.104	0.06

13.75	0.05	5002.03	0.103	0.05

TIME (HRS)	INFLOW (CFS)	ELEV (FEET)	VOLUME (AC-FT)	OUTFLOW (CFS)
14.00	0.05	5002.03	0.103	0.05
14.25	0.05	5002.03	0.103	0.05
14.50	0.05	5002.02	0.103	0.05
14.75	0.05	5002.02	0.103	0.05
15.00	0.05	5002.02	0.103	0.05
15.25	0.05	5002.02	0.103	0.05
15.50	0.05	5002.02	0.103	0.05
15.75	0.04	5002.02	0.103	0.05
16.00	0.04	5002.02	0.103	0.05
16.25	0.04	5002.02	0.103	0.05
16.50	0.04	5002.02	0.103	0.04
16.75	0.04	5002.02	0.103	0.04
17.00	0.04	5002.02	0.103	0.04
17.25	0.04	5002.02	0.103	0.04
17.50	0.04	5002.02	0.103	0.04
17.75	0.04	5002.02	0.103	0.04
18.00	0.04	5002.02	0.103	0.04
18.25	0.04	5002.02	0.103	0.04
18.50	0.03	5002.02	0.103	0.04
18.75	0.03	5002.02	0.103	0.04
19.00	0.03	5002.01	0.102	0.03
19.25	0.03	5002.01	0.102	0.03
19.50	0.03	5002.01	0.102	0.03
19.75	0.03	5002.01	0.102	0.03
20.00	0.03	5002.01	0.102	0.03
20.25	0.03	5002.01	0.102	0.03
20.50	0.03	5002.01	0.102	0.03
20.75	0.03	5002.01	0.102	0.03
21.00	0.03	5002.01	0.102	0.03
21.25	0.02	5002.01	0.102	0.03
21.50	0.02	5002.01	0.102	0.03
21.75	0.02	5002.01	0.102	0.02
22.00	0.02	5002.01	0.102	0.02
22.25	0.02	5002.01	0.102	0.02
22.50	0.02	5002.01	0.102	0.02
22.75	0.02	5002.01	0.102	0.02
23.00	0.02	5002.01	0.102	0.02
23.25	0.02	5002.01	0.102	0.02
23.50	0.02	5002.00	0.102	0.02
23.75	0.01	5002.00	0.102	0.02
24.00	0.01	5002.00	0.102	0.02
24.25	0.00	5002.00	0.101	0.01
24.50	0.00	5002.00	0.101	0.01
24.75	0.00	5002.00	0.101	0.01
25.00	0.00	5002.00	0.101	0.01

25.25	0.00	5002.00	0.101	0.01
25.50	0.00	5002.00	0.101	0.01
25.75	0.00	5002.00	0.101	0.01
26.00	0.00	5002.00	0.101	0.01
26.25	0.00	5002.00	0.101	0.01
26.50	0.00	5002.00	0.101	0.01
26.75	0.00	5002.00	0.101	0.01
27.00	0.00	5002.00	0.101	0.01
27.25	0.00	5002.00	0.101	0.01
27.50	0.00	5002.00	0.101	0.01
27.75	0.00	5002.00	0.101	0.01

TIME (HRS)	INFLOW (CFS)	ELEV (FEET)	VOLUME (AC-FT)	OUTFLOW (CFS)
28.00	0.00	5002.00	0.101	0.01
28.25	0.00	5002.00	0.101	0.01
28.50	0.00	5002.00	0.101	0.01
28.75	0.00	5002.00	0.101	0.01
29.00	0.00	5002.00	0.101	0.01
29.25	0.00	5002.00	0.101	0.01
29.50	0.00	5002.00	0.101	0.01
29.75	0.00	5002.00	0.101	0.01
30.00	0.00	5002.00	0.101	0.01
30.25	0.00	5002.00	0.101	0.01
30.50	0.00	5002.00	0.101	0.01
30.75	0.00	5002.00	0.101	0.01
31.00	0.00	5002.00	0.101	0.01
31.25	0.00	5002.00	0.101	0.01
31.50	0.00	5002.00	0.101	0.01
31.75	0.00	5002.00	0.101	0.01
32.00	0.00	5002.00	0.101	0.01
32.25	0.00	5002.00	0.101	0.01
32.50	0.00	5002.00	0.101	0.01
32.75	0.00	5002.00	0.101	0.01
33.00	0.00	5002.00	0.101	0.01
33.25	0.00	5002.00	0.101	0.01
33.50	0.00	5002.00	0.101	0.01
33.75	0.00	5002.00	0.101	0.01
34.00	0.00	5002.00	0.101	0.01
34.25	0.00	5002.00	0.101	0.01
34.50	0.00	5002.00	0.101	0.01
34.75	0.00	5002.00	0.101	0.01
35.00	0.00	5002.00	0.101	0.01
35.25	0.00	5002.00	0.101	0.01
35.50	0.00	5002.00	0.101	0.01
35.75	0.00	5002.00	0.101	0.01
36.00	0.00	5002.00	0.101	0.01
36.25	0.00	5002.00	0.101	0.01
36.50	0.00	5002.00	0.101	0.01

36.75	0.00	5002.00	0.101	0.01
37.00	0.00	5002.00	0.101	0.01
37.25	0.00	5002.00	0.101	0.01
37.50	0.00	5002.00	0.101	0.01
37.75	0.00	5002.00	0.101	0.01
38.00	0.00	5002.00	0.101	0.01
38.25	0.00	5002.00	0.101	0.01
38.50	0.00	5002.00	0.101	0.01
38.75	0.00	5002.00	0.101	0.01
39.00	0.00	5002.00	0.101	0.01
39.25	0.00	5002.00	0.101	0.01
39.50	0.00	5002.00	0.101	0.01
39.75	0.00	5002.00	0.101	0.01
40.00	0.00	5002.00	0.101	0.01
40.25	0.00	5002.00	0.101	0.01
40.50	0.00	5002.00	0.101	0.01
40.75	0.00	5002.00	0.101	0.01
41.00	0.00	5002.00	0.101	0.01
41.25	0.00	5002.00	0.101	0.01
41.50	0.00	5002.00	0.101	0.01
41.75	0.00	5002.00	0.101	0.01

TIME (HRS)	INFLOW (CFS)	ELEV (FEET)	VOLUME (AC-FT)	OUTFLOW (CFS)
42.00	0.00	5002.00	0.101	0.01
42.25	0.00	5002.00	0.101	0.01
42.50	0.00	5002.00	0.101	0.01
42.75	0.00	5002.00	0.101	0.01
43.00	0.00	5002.00	0.101	0.01
43.25	0.00	5002.00	0.101	0.01
43.50	0.00	5002.00	0.101	0.01
43.75	0.00	5002.00	0.101	0.01
44.00	0.00	5002.00	0.101	0.01
44.25	0.00	5002.00	0.101	0.01
44.50	0.00	5002.00	0.101	0.01
44.75	0.00	5002.00	0.101	0.01
45.00	0.00	5002.00	0.101	0.01
45.25	0.00	5002.00	0.101	0.01
45.50	0.00	5002.00	0.101	0.01
45.75	0.00	5002.00	0.101	0.01
46.00	0.00	5002.00	0.101	0.01
46.25	0.00	5002.00	0.101	0.01
46.50	0.00	5002.00	0.101	0.01
46.75	0.00	5002.00	0.101	0.01
47.00	0.00	5002.00	0.101	0.01
47.25	0.00	5002.00	0.101	0.01
47.50	0.00	5002.00	0.101	0.01
47.75	0.00	5002.00	0.101	0.01
48.00	0.00	5002.00	0.101	0.01

48.25	0.00	5002.00	0.101	0.01
48.50	0.00	5002.00	0.101	0.01
48.75	0.00	5002.00	0.101	0.01
49.00	0.00	5002.00	0.101	0.01
49.25	0.00	5002.00	0.101	0.01
49.50	0.00	5002.00	0.101	0.01
49.75	0.00	5002.00	0.101	0.01
50.00	0.00	5002.00	0.101	0.01
50.25	0.00	5002.00	0.101	0.01
50.50	0.00	5002.00	0.101	0.01
50.75	0.00	5002.00	0.101	0.01
51.00	0.00	5002.00	0.101	0.01
51.25	0.00	5002.00	0.101	0.01
51.50	0.00	5002.00	0.101	0.01
51.75	0.00	5002.00	0.101	0.01
52.00	0.00	5002.00	0.101	0.01
52.25	0.00	5002.00	0.101	0.01
52.50	0.00	5002.00	0.101	0.01
52.75	0.00	5002.00	0.101	0.01
53.00	0.00	5002.00	0.101	0.01
53.25	0.00	5002.00	0.101	0.01
53.50	0.00	5002.00	0.101	0.01
53.75	0.00	5002.00	0.101	0.01
54.00	0.00	5002.00	0.101	0.01
54.25	0.00	5002.00	0.101	0.01
54.50	0.00	5002.00	0.101	0.01
54.75	0.00	5002.00	0.101	0.01
55.00	0.00	5002.00	0.101	0.01
55.25	0.00	5002.00	0.101	0.01
55.50	0.00	5002.00	0.101	0.01
55.75	0.00	5002.00	0.101	0.01

TIME (HRS)	INFLOW (CFS)	ELEV (FEET)	VOLUME (AC-FT)	OUTFLOW (CFS)
56.00	0.00	5002.00	0.101	0.01
56.25	0.00	5002.00	0.101	0.01
56.50	0.00	5002.00	0.101	0.01
56.75	0.00	5002.00	0.101	0.01
57.00	0.00	5002.00	0.101	0.01
57.25	0.00	5002.00	0.101	0.01
57.50	0.00	5002.00	0.101	0.01
57.75	0.00	5002.00	0.101	0.01
58.00	0.00	5002.00	0.101	0.01
58.25	0.00	5002.00	0.101	0.01
58.50	0.00	5002.00	0.101	0.01
58.75	0.00	5002.00	0.101	0.01
59.00	0.00	5002.00	0.101	0.01
59.25	0.00	5002.00	0.101	0.01
59.50	0.00	5002.00	0.101	0.01

59.75	0.00	5002.00	0.101	0.01
60.00	0.00	5002.00	0.101	0.01
60.25	0.00	5002.00	0.101	0.01
60.50	0.00	5002.00	0.101	0.01
60.75	0.00	5002.00	0.101	0.01
61.00	0.00	5002.00	0.101	0.01
61.25	0.00	5002.00	0.101	0.01
61.50	0.00	5002.00	0.101	0.01
61.75	0.00	5002.00	0.101	0.01
62.00	0.00	5002.00	0.101	0.01
62.25	0.00	5002.00	0.101	0.01
62.50	0.00	5002.00	0.101	0.01
62.75	0.00	5002.00	0.101	0.01
63.00	0.00	5002.00	0.101	0.01
63.25	0.00	5002.00	0.101	0.01
63.50	0.00	5002.00	0.101	0.01
63.75	0.00	5002.00	0.101	0.01
64.00	0.00	5002.00	0.101	0.01
64.25	0.00	5002.00	0.101	0.01
64.50	0.00	5002.00	0.101	0.01
64.75	0.00	5002.00	0.101	0.01
65.00	0.00	5002.00	0.101	0.01
65.25	0.00	5002.00	0.101	0.01
65.50	0.00	5002.00	0.101	0.01
65.75	0.00	5002.00	0.101	0.01
66.00	0.00	5002.00	0.101	0.01
66.25	0.00	5002.00	0.101	0.01
66.50	0.00	5002.00	0.101	0.01
66.75	0.00	5002.00	0.101	0.01
67.00	0.00	5002.00	0.101	0.01
67.25	0.00	5002.00	0.101	0.01
67.50	0.00	5002.00	0.101	0.01
67.75	0.00	5002.00	0.101	0.01
68.00	0.00	5002.00	0.101	0.01
68.25	0.00	5002.00	0.101	0.01
68.50	0.00	5002.00	0.101	0.01
68.75	0.00	5002.00	0.101	0.01
69.00	0.00	5002.00	0.101	0.01
69.25	0.00	5002.00	0.101	0.01
69.50	0.00	5002.00	0.101	0.01
69.75	0.00	5002.00	0.101	0.01

TIME (HRS)	INFLOW (CFS)	ELEV (FEET)	VOLUME (AC-FT)	OUTFLOW (CFS)
70.00	0.00	5002.00	0.101	0.01
70.25	0.00	5002.00	0.101	0.01
70.50	0.00	5002.00	0.101	0.01
70.75	0.00	5002.00	0.101	0.01
71.00	0.00	5002.00	0.101	0.01

71.25	0.00	5002.00	0.101	0.01
71.50	0.00	5002.00	0.101	0.01
71.75	0.00	5002.00	0.101	0.01
72.00	0.00	5002.00	0.101	0.01
72.25	0.00	5002.00	0.101	0.01
72.50	0.00	5002.00	0.101	0.01
72.75	0.00	5002.00	0.101	0.01
73.00	0.00	5002.00	0.101	0.01
73.25	0.00	5002.00	0.101	0.01
73.50	0.00	5002.00	0.101	0.01
73.75	0.00	5002.00	0.101	0.01
74.00	0.00	5002.00	0.101	0.01
74.25	0.00	5002.00	0.101	0.01
74.50	0.00	5002.00	0.101	0.01
74.75	0.00	5002.00	0.101	0.01
75.00	0.00	5002.00	0.101	0.01
75.25	0.00	5002.00	0.101	0.01
75.50	0.00	5002.00	0.101	0.01
75.75	0.00	5002.00	0.101	0.01
76.00	0.00	5002.00	0.101	0.01
76.25	0.00	5002.00	0.101	0.01
76.50	0.00	5002.00	0.101	0.01
76.75	0.00	5002.00	0.101	0.01
77.00	0.00	5002.00	0.101	0.01
77.25	0.00	5002.00	0.101	0.01
77.50	0.00	5002.00	0.101	0.01
77.75	0.00	5002.00	0.101	0.01
78.00	0.00	5002.00	0.101	0.01
78.25	0.00	5002.00	0.101	0.01
78.50	0.00	5002.00	0.101	0.01
78.75	0.00	5002.00	0.101	0.01
79.00	0.00	5002.00	0.101	0.01
79.25	0.00	5002.00	0.101	0.01
79.50	0.00	5002.00	0.101	0.01
79.75	0.00	5002.00	0.101	0.01
80.00	0.00	5002.00	0.101	0.01
80.25	0.00	5002.00	0.101	0.01
80.50	0.00	5002.00	0.101	0.01
80.75	0.00	5002.00	0.101	0.01
81.00	0.00	5002.00	0.101	0.01
81.25	0.00	5002.00	0.101	0.01
81.50	0.00	5002.00	0.101	0.01
81.75	0.00	5002.00	0.101	0.01
82.00	0.00	5002.00	0.101	0.01
82.25	0.00	5002.00	0.101	0.01
82.50	0.00	5002.00	0.101	0.01
82.75	0.00	5002.00	0.101	0.01
83.00	0.00	5002.00	0.101	0.01
83.25	0.00	5002.00	0.101	0.01
83.50	0.00	5002.00	0.101	0.01

83.75	0.00	5002.00	0.101	0.01

TIME (HRS)	INFLOW (CFS)	ELEV (FEET)	VOLUME (AC-FT)	OUTFLOW (CFS)
84.00	0.00	5002.00	0.101	0.01
84.25	0.00	5002.00	0.101	0.01
84.50	0.00	5002.00	0.101	0.01
84.75	0.00	5002.00	0.101	0.01
85.00	0.00	5002.00	0.101	0.01
85.25	0.00	5002.00	0.101	0.01
85.50	0.00	5002.00	0.101	0.01
85.75	0.00	5002.00	0.101	0.01
86.00	0.00	5002.00	0.101	0.01
86.25	0.00	5002.00	0.101	0.01
86.50	0.00	5002.00	0.101	0.01
86.75	0.00	5002.00	0.101	0.01
87.00	0.00	5002.00	0.101	0.01
87.25	0.00	5002.00	0.101	0.01
87.50	0.00	5002.00	0.101	0.01
87.75	0.00	5002.00	0.101	0.01
88.00	0.00	5002.00	0.101	0.01
88.25	0.00	5002.00	0.101	0.01
88.50	0.00	5002.00	0.101	0.01
88.75	0.00	5002.00	0.101	0.01
89.00	0.00	5002.00	0.101	0.01
89.25	0.00	5002.00	0.101	0.01
89.50	0.00	5002.00	0.101	0.01
89.75	0.00	5002.00	0.101	0.01
90.00	0.00	5002.00	0.101	0.01
90.25	0.00	5002.00	0.101	0.01
90.50	0.00	5002.00	0.101	0.01
90.75	0.00	5002.00	0.101	0.01
91.00	0.00	5002.00	0.101	0.01
91.25	0.00	5002.00	0.101	0.01
91.50	0.00	5002.00	0.101	0.01
91.75	0.00	5002.00	0.101	0.01
92.00	0.00	5002.00	0.101	0.01
92.25	0.00	5002.00	0.101	0.01
92.50	0.00	5002.00	0.101	0.01
92.75	0.00	5002.00	0.101	0.01
93.00	0.00	5002.00	0.101	0.01
93.25	0.00	5002.00	0.101	0.01
93.50	0.00	5002.00	0.101	0.01
93.75	0.00	5002.00	0.101	0.01
94.00	0.00	5002.00	0.101	0.01
94.25	0.00	5002.00	0.101	0.01
94.50	0.00	5002.00	0.101	0.01
94.75	0.00	5002.00	0.101	0.01
95.00	0.00	5002.00	0.101	0.01

95.25	0.00	5002.00	0.101	0.01
95.50	0.00	5002.00	0.101	0.01
95.75	0.00	5002.00	0.101	0.01
96.00	0.00	5002.00	0.101	0.01
96.25	0.00	5002.00	0.101	0.01
96.50	0.00	5002.00	0.101	0.01
96.75	0.00	5002.00	0.101	0.01
97.00	0.00	5002.00	0.101	0.01
97.25	0.00	5002.00	0.101	0.01
97.50	0.00	5002.00	0.101	0.01
97.75	0.00	5002.00	0.101	0.01

TIME (HRS)	INFLOW (CFS)	ELEV (FEET)	VOLUME (AC-FT)	OUTFLOW (CFS)
98.00	0.00	5002.00	0.101	0.01
98.25	0.00	5002.00	0.101	0.01
98.50	0.00	5002.00	0.101	0.01
98.75	0.00	5002.00	0.101	0.01
99.00	0.00	5002.00	0.101	0.01
99.25	0.00	5002.00	0.101	0.01
99.50	0.00	5002.00	0.101	0.01
99.75	0.00	5002.00	0.101	0.01
100.00	0.00	5002.00	0.101	0.01
100.25	0.00	5002.00	0.101	0.01
100.50	0.00	5002.00	0.101	0.01
100.75	0.00	5002.00	0.101	0.01
101.00	0.00	5002.00	0.101	0.01
101.25	0.00	5002.00	0.101	0.01
101.50	0.00	5002.00	0.101	0.01
101.75	0.00	5002.00	0.101	0.01
102.00	0.00	5002.00	0.101	0.01
102.25	0.00	5002.00	0.101	0.01
102.50	0.00	5002.00	0.101	0.01
102.75	0.00	5002.00	0.101	0.01
103.00	0.00	5002.00	0.101	0.01
103.25	0.00	5002.00	0.101	0.01
103.50	0.00	5002.00	0.101	0.01
103.75	0.00	5002.00	0.101	0.01
104.00	0.00	5002.00	0.101	0.01
104.25	0.00	5002.00	0.101	0.01
104.50	0.00	5002.00	0.101	0.01
104.75	0.00	5002.00	0.101	0.01
105.00	0.00	5002.00	0.101	0.01
105.25	0.00	5002.00	0.101	0.01
105.50	0.00	5002.00	0.101	0.01
105.75	0.00	5002.00	0.101	0.01
106.00	0.00	5002.00	0.101	0.01
106.25	0.00	5001.00	0.034	0.01
106.50	0.00	5001.00	0.033	0.01

106.75	0.00	5000.99	0.033	0.01
107.00	0.00	5000.99	0.033	0.01
107.25	0.00	5000.98	0.033	0.01
107.50	0.00	5000.98	0.033	0.01
107.75	0.00	5000.98	0.032	0.01
108.00	0.00	5000.97	0.032	0.01
108.25	0.00	5000.97	0.032	0.01
108.50	0.00	5000.97	0.032	0.01
108.75	0.00	5000.96	0.032	0.01
109.00	0.00	5000.96	0.031	0.01
109.25	0.00	5000.96	0.031	0.01
109.50	0.00	5000.95	0.031	0.01
109.75	0.00	5000.95	0.031	0.01
110.00	0.00	5000.95	0.031	0.01
110.25	0.00	5000.94	0.030	0.01
110.50	0.00	5000.94	0.030	0.01
110.75	0.00	5000.94	0.030	0.01
111.00	0.00	5000.93	0.030	0.01
111.25	0.00	5000.93	0.030	0.01
111.50	0.00	5000.93	0.029	0.01
111.75	0.00	5000.92	0.029	0.01

TIME (HRS)	INFLOW (CFS)	ELEV (FEET)	VOLUME (AC-FT)	OUTFLOW (CFS)
112.00	0.00	5000.92	0.029	0.01
112.25	0.00	5000.92	0.029	0.01
112.50	0.00	5000.91	0.029	0.01
112.75	0.00	5000.91	0.029	0.01
113.00	0.00	5000.91	0.028	0.01
113.25	0.00	5000.90	0.028	0.01
113.50	0.00	5000.90	0.028	0.01
113.75	0.00	5000.90	0.028	0.01
114.00	0.00	5000.90	0.028	0.01
114.25	0.00	5000.89	0.028	0.01
114.50	0.00	5000.89	0.027	0.01
114.75	0.00	5000.89	0.027	0.01
115.00	0.00	5000.88	0.027	0.01
115.25	0.00	5000.88	0.027	0.01
115.50	0.00	5000.88	0.027	0.01
115.75	0.00	5000.87	0.027	0.01
116.00	0.00	5000.87	0.026	0.01
116.25	0.00	5000.87	0.026	0.01
116.50	0.00	5000.87	0.026	0.01
116.75	0.00	5000.86	0.026	0.01
117.00	0.00	5000.86	0.026	0.01
117.25	0.00	5000.86	0.026	0.01
117.50	0.00	5000.85	0.025	0.01
117.75	0.00	5000.85	0.025	0.01
118.00	0.00	5000.85	0.025	0.01

118.25	0.00	5000.85	0.025	0.01
118.50	0.00	5000.84	0.025	0.01
118.75	0.00	5000.84	0.025	0.01
119.00	0.00	5000.84	0.025	0.01
119.25	0.00	5000.84	0.024	0.01
119.50	0.00	5000.83	0.024	0.01
119.75	0.00	5000.83	0.024	0.01
120.00	0.00	5000.83	0.024	0.01
120.25	0.00	5000.82	0.024	0.01
120.50	0.00	5000.82	0.024	0.01
120.75	0.00	5000.82	0.023	0.01
121.00	0.00	5000.82	0.023	0.01
121.25	0.00	5000.81	0.023	0.01
121.50	0.00	5000.81	0.023	0.01
121.75	0.00	5000.81	0.023	0.01
122.00	0.00	5000.81	0.023	0.01
122.25	0.00	5000.80	0.023	0.01
122.50	0.00	5000.80	0.023	0.01
122.75	0.00	5000.80	0.022	0.01
123.00	0.00	5000.80	0.022	0.01
123.25	0.00	5000.79	0.022	0.01
123.50	0.00	5000.79	0.022	0.01
123.75	0.00	5000.79	0.022	0.01
124.00	0.00	5000.79	0.022	0.01
124.25	0.00	5000.78	0.022	0.01
124.50	0.00	5000.78	0.021	0.01
124.75	0.00	5000.78	0.021	0.01
125.00	0.00	5000.78	0.021	0.01
125.25	0.00	5000.78	0.021	0.01
125.50	0.00	5000.77	0.021	0.01
125.75	0.00	5000.77	0.021	0.01

TIME (HRS)	INFLOW (CFS)	ELEV (FEET)	VOLUME (AC-FT)	OUTFLOW (CFS)
126.00	0.00	5000.77	0.021	0.01
126.25	0.00	5000.77	0.021	0.01
126.50	0.00	5000.76	0.020	0.01
126.75	0.00	5000.76	0.020	0.01
127.00	0.00	5000.76	0.020	0.01
127.25	0.00	5000.76	0.020	0.01
127.50	0.00	5000.76	0.020	0.01
127.75	0.00	5000.75	0.020	0.01
128.00	0.00	5000.75	0.020	0.01
128.25	0.00	5000.75	0.020	0.01
128.50	0.00	5000.75	0.019	0.01
128.75	0.00	5000.74	0.019	0.01
129.00	0.00	5000.74	0.019	0.01
129.25	0.00	5000.74	0.019	0.01
129.50	0.00	5000.74	0.019	0.01

```
      129.75       0.00   5000.74      0.019      0.01
      130.00       0.00   5000.73      0.019      0.01
      130.25       0.00   5000.73      0.019      0.01
      130.50       0.00   5000.73      0.018      0.01
      130.75       0.00   5000.73      0.018      0.01
      131.00       0.00   5000.73      0.018      0.01
      131.25       0.00   5000.72      0.018      0.01
      131.50       0.00   5000.72      0.018      0.01
      131.75       0.00   5000.72      0.018      0.01
      132.00       0.00   5000.72      0.018      0.01
      132.25       0.00   5000.72      0.018      0.01
      132.50       0.00   5000.71      0.018      0.01
      132.75       0.00   5000.71      0.017      0.01
      133.00       0.00   5000.71      0.017      0.01
      133.25       0.00   5000.71      0.017      0.01
      133.50       0.00   5000.71      0.017      0.01
      133.75       0.00   5000.70      0.017      0.01
      134.00       0.00   5000.70      0.017      0.01
      134.25       0.00   5000.70      0.017      0.01
      134.50       0.00   5000.70      0.017      0.00
    PEAK DISCHARGE =        7.743 CFS - PEAK OCCURS AT HOUR    1.60
    MAXIMUM WATER SURFACE ELEVATION =     5003.102
    MAXIMUM STORAGE =        0.1988 AC-FT      INCREMENTAL TIME=    0.050000HRS

   *
   ************************************************************
   *
   COMPUTE NM HYD      ID=1  HYD=XD1  DA=0.0015604
                       A B C D  0  45  40  15
                       TP=0.13330   MASS RAIN=-1

        K =  0.072649HR    TP =  0.133300HR    K/TP RATIO =  0.545000     SHAPE
CONSTANT, N =  7.106428
        UNIT PEAK =  0.92408    CFS   UNIT VOLUME =   0.9865       B =   526.28
 P60 = 1.8000
        AREA =     0.000234 SQ MI    IA =   0.10000 INCHES    INF =   0.04000
INCHES PER HOUR
        RUNOFF COMPUTED BY INITIAL ABSTRACTION/INFILTRATION NUMBER METHOD - DT =
0.050000


        K =  0.119449HR    TP =  0.133300HR    K/TP RATIO =  0.896090     SHAPE
CONSTANT, N =  3.955991
        UNIT PEAK =   3.5047    CFS   UNIT VOLUME =   0.9976       B =   352.23
 P60 = 1.8000
        AREA =     0.001326 SQ MI    IA =   0.42941 INCHES    INF =   1.05235
INCHES PER HOUR
        RUNOFF COMPUTED BY INITIAL ABSTRACTION/INFILTRATION NUMBER METHOD - DT =
0.050000
```

```
        BULKING FACTOR APPLIED TO HYDROGRAPH.  FACTOR =  1.10000 AT PEAK FLOW.

    PRINT HYD           ID=1  CODE=1

                                                HYDROGRAPH FROM AREA XD1



        RUNOFF VOLUME =     1.23551 INCHES     =       0.1028 ACRE-FEET
        PEAK DISCHARGE RATE =       3.19 CFS  AT   1.500 HOURS   BASIN AREA =
0.0016 SQ. MI.



    *
    COMPUTE NM HYD      ID=2  HYD=XD2  DA=0.0016502
                        A B C D  10  30  40  20
                        TP=0.13330   MASS RAIN=-1

         K =  0.072649HR    TP =  0.133300HR    K/TP RATIO =  0.545000     SHAPE
CONSTANT, N =  7.106428
         UNIT PEAK =   1.3030    CFS   UNIT VOLUME =   0.9911       B =   526.28
 P60 = 1.8000
         AREA =     0.000330 SQ MI    IA =   0.10000 INCHES    INF =   0.04000
INCHES PER HOUR
         RUNOFF COMPUTED BY INITIAL ABSTRACTION/INFILTRATION NUMBER METHOD - DT =
0.050000


         K =  0.122804HR    TP =  0.133300HR    K/TP RATIO =  0.921257     SHAPE
CONSTANT, N =  3.841709
         UNIT PEAK =   3.4116    CFS   UNIT VOLUME =   0.9974       B =   344.48
 P60 = 1.8000
         AREA =     0.001320 SQ MI    IA =   0.44375 INCHES    INF =   1.09250
INCHES PER HOUR
         RUNOFF COMPUTED BY INITIAL ABSTRACTION/INFILTRATION NUMBER METHOD - DT =
0.050000

        BULKING FACTOR APPLIED TO HYDROGRAPH.  FACTOR =  1.10000 AT PEAK FLOW.

    PRINT HYD           ID=2  CODE=1

                                                HYDROGRAPH FROM AREA XD2



        RUNOFF VOLUME =     1.29606 INCHES     =       0.1141 ACRE-FEET
        PEAK DISCHARGE RATE =       3.40 CFS  AT   1.500 HOURS   BASIN AREA =
0.0017 SQ. MI.
```

```
    *
    COMPUTE NM HYD      ID=3  HYD=M4  DA=0.0003507
                        A B C D  0  0  0  100
                        TP=0.13330   MASS RAIN=-1

         K =  0.072649HR    TP =  0.133300HR    K/TP RATIO =  0.545000     SHAPE
CONSTANT, N =  7.106428
         UNIT PEAK =   1.3846    CFS   UNIT VOLUME =   0.9911       B =   526.28
 P60 = 1.8000
         AREA =     0.000351 SQ MI    IA =   0.10000 INCHES    INF =   0.04000
INCHES PER HOUR
         RUNOFF COMPUTED BY INITIAL ABSTRACTION/INFILTRATION NUMBER METHOD - DT =
0.050000

        BULKING FACTOR APPLIED TO HYDROGRAPH.  FACTOR =  1.10000 AT PEAK FLOW.

    PRINT HYD           ID=3  CODE=1

                                                HYDROGRAPH FROM AREA M4



        RUNOFF VOLUME =     2.57457 INCHES     =       0.0482 ACRE-FEET
        PEAK DISCHARGE RATE =       1.07 CFS  AT   1.500 HOURS   BASIN AREA =
0.0004 SQ. MI.



    *
    COMPUTE NM HYD      ID=4  HYD=M3  DA=0.00033327
                        A B C D  0  0  0  100
                        TP=0.13330   MASS RAIN=-1

         K =  0.072649HR    TP =  0.133300HR    K/TP RATIO =  0.545000     SHAPE
CONSTANT, N =  7.106428
         UNIT PEAK =   1.3158    CFS   UNIT VOLUME =   0.9911       B =   526.28
 P60 = 1.8000
         AREA =     0.000333 SQ MI    IA =   0.10000 INCHES    INF =   0.04000
INCHES PER HOUR
         RUNOFF COMPUTED BY INITIAL ABSTRACTION/INFILTRATION NUMBER METHOD - DT =
0.050000

        BULKING FACTOR APPLIED TO HYDROGRAPH.  FACTOR =  1.10000 AT PEAK FLOW.

    PRINT HYD           ID=4  CODE=1

                                                HYDROGRAPH FROM AREA M3
```

```
        RUNOFF VOLUME =     2.57457 INCHES     =       0.0458 ACRE-FEET
        PEAK DISCHARGE RATE =       1.02 CFS  AT   1.500 HOURS   BASIN AREA =
0.0003 SQ. MI.



    *
    COMPUTE NM HYD      ID=5  HYD=XM2  DA=0.0010503
                        A B C D  0  0  78  22
                        TP=0.13330   MASS RAIN=-1

         K =  0.072649HR    TP =  0.133300HR    K/TP RATIO =  0.545000     SHAPE
CONSTANT, N =  7.106428
         UNIT PEAK =  0.91226    CFS   UNIT VOLUME =   0.9865       B =   526.28
 P60 = 1.8000
         AREA =     0.000231 SQ MI    IA =   0.10000 INCHES    INF =   0.04000
INCHES PER HOUR
         RUNOFF COMPUTED BY INITIAL ABSTRACTION/INFILTRATION NUMBER METHOD - DT =
0.050000


         K =  0.105077HR    TP =  0.133300HR    K/TP RATIO =  0.788276     SHAPE
CONSTANT, N =  4.552748
         UNIT PEAK =   2.3998    CFS   UNIT VOLUME =   0.9962       B =   390.48
 P60 = 1.8000
         AREA =     0.000819 SQ MI    IA =   0.35000 INCHES    INF =   0.83000
INCHES PER HOUR
         RUNOFF COMPUTED BY INITIAL ABSTRACTION/INFILTRATION NUMBER METHOD - DT =
0.050000

        BULKING FACTOR APPLIED TO HYDROGRAPH.  FACTOR =  1.10000 AT PEAK FLOW.

    PRINT HYD           ID=5  CODE=1

                                                HYDROGRAPH FROM AREA XM2



        RUNOFF VOLUME =     1.45858 INCHES     =       0.0817 ACRE-FEET
        PEAK DISCHARGE RATE =       2.46 CFS  AT   1.500 HOURS   BASIN AREA =
0.0011 SQ. MI.



    *
    COMPUTE NM HYD      ID=6  HYD=XM1  DA=0.0005732
                        A B C D  0  0  55  45
                        TP=0.13330   MASS RAIN=-1
```

```
         K =  0.072649HR    TP =  0.133300HR    K/TP RATIO =  0.545000     SHAPE
CONSTANT, N =  7.106428
         UNIT PEAK =   1.0184    CFS   UNIT VOLUME =   0.9891       B =   526.28
 P60 = 1.8000
         AREA =     0.000258 SQ MI    IA =   0.10000 INCHES    INF =   0.04000
INCHES PER HOUR
         RUNOFF COMPUTED BY INITIAL ABSTRACTION/INFILTRATION NUMBER METHOD - DT =
0.050000


         K =  0.105077HR    TP =  0.133300HR    K/TP RATIO =  0.788276     SHAPE
CONSTANT, N =  4.552748
         UNIT PEAK =  0.92350    CFS   UNIT VOLUME =   0.9877       B =   390.48
 P60 = 1.8000
         AREA =     0.000315 SQ MI    IA =   0.35000 INCHES    INF =   0.83000
INCHES PER HOUR
         RUNOFF COMPUTED BY INITIAL ABSTRACTION/INFILTRATION NUMBER METHOD - DT =
0.050000

        BULKING FACTOR APPLIED TO HYDROGRAPH.  FACTOR =  1.10000 AT PEAK FLOW.

    PRINT HYD           ID=6  CODE=1

                                                HYDROGRAPH FROM AREA XM1



        RUNOFF VOLUME =     1.78766 INCHES     =       0.0546 ACRE-FEET
        PEAK DISCHARGE RATE =       1.47 CFS  AT   1.500 HOURS   BASIN AREA =
0.0006 SQ. MI.



    *
    COMPUTE NM HYD      ID=7  HYD=M1  DA=0.00185513
                        A B C D  0  10  38  52
                        TP=0.13330   MASS RAIN=-1

         K =  0.072649HR    TP =  0.133300HR    K/TP RATIO =  0.545000     SHAPE
CONSTANT, N =  7.106428
         UNIT PEAK =   3.8086    CFS   UNIT VOLUME =   0.9966       B =   526.28
 P60 = 1.8000
         AREA =     0.000965 SQ MI    IA =   0.10000 INCHES    INF =   0.04000
INCHES PER HOUR
         RUNOFF COMPUTED BY INITIAL ABSTRACTION/INFILTRATION NUMBER METHOD - DT =
0.050000


         K =  0.110733HR    TP =  0.133300HR    K/TP RATIO =  0.830703     SHAPE
```

```
CONSTANT, N =  4.294546
         UNIT PEAK =   2.5007    CFS   UNIT VOLUME =   0.9969       B =   374.35
 P60 = 1.8000
         AREA =     0.000890 SQ MI    IA =   0.38125 INCHES    INF =   0.91750
INCHES PER HOUR
         RUNOFF COMPUTED BY INITIAL ABSTRACTION/INFILTRATION NUMBER METHOD - DT =
0.050000

        BULKING FACTOR APPLIED TO HYDROGRAPH.  FACTOR =  1.10000 AT PEAK FLOW.

    PRINT HYD           ID=7  CODE=1

                                                HYDROGRAPH FROM AREA M1



        RUNOFF VOLUME =     1.85834 INCHES     =       0.1839 ACRE-FEET
        PEAK DISCHARGE RATE =       4.74 CFS  AT   1.500 HOURS   BASIN AREA =
0.0019 SQ. MI.



    *
    COMPUTE NM HYD      ID=8  HYD=M2  DA=0.00060728
                        A B C D  0  0  0  100
                        TP=0.13330   MASS RAIN=-1

         K =  0.072649HR    TP =  0.133300HR    K/TP RATIO =  0.545000     SHAPE
CONSTANT, N =  7.106428
         UNIT PEAK =   2.3976    CFS   UNIT VOLUME =   0.9951       B =   526.28
 P60 = 1.8000
         AREA =     0.000607 SQ MI    IA =   0.10000 INCHES    INF =   0.04000
INCHES PER HOUR
         RUNOFF COMPUTED BY INITIAL ABSTRACTION/INFILTRATION NUMBER METHOD - DT =
0.050000

        BULKING FACTOR APPLIED TO HYDROGRAPH.  FACTOR =  1.10000 AT PEAK FLOW.

    PRINT HYD           ID=8  CODE=1

                                                HYDROGRAPH FROM AREA M2



        RUNOFF VOLUME =     2.57457 INCHES     =       0.0834 ACRE-FEET
        PEAK DISCHARGE RATE =       1.85 CFS  AT   1.500 HOURS   BASIN AREA =
0.0006 SQ. MI.
```

```
*
*Add basins XD1 M4 basin-routing
ADD HYD             ID=9  HYD=XD1_M4  ID=1  ID=3
PRINT HYD           ID=9  CODE=1

                                          HYDROGRAPH FROM AREA XD1_M4


    RUNOFF VOLUME =     1.48086 INCHES     =       0.1509 ACRE-FEET
    PEAK DISCHARGE RATE =       4.26 CFS  AT   1.500 HOURS   BASIN AREA =
0.0019 SQ. MI.


*
*Add basins XD2 M3 basin-routing
ADD HYD             ID=10  HYD=XD2_M3  ID=2  ID=4
PRINT HYD           ID=10  CODE=1

                                          HYDROGRAPH FROM AREA XD2_M3


    RUNOFF VOLUME =     1.51067 INCHES     =       0.1598 ACRE-FEET
    PEAK DISCHARGE RATE =       4.42 CFS  AT   1.500 HOURS   BASIN AREA =
0.0020 SQ. MI.


*
*Add basins XM2 XD2 M3 basin-routing
ADD HYD             ID=11  HYD=XM2_XD2_M3  ID=5  ID=10
PRINT HYD           ID=11  CODE=1

                                          HYDROGRAPH FROM AREA XM2_XD2_M3


    RUNOFF VOLUME =     1.49237 INCHES     =       0.2415 ACRE-FEET
    PEAK DISCHARGE RATE =       6.88 CFS  AT   1.500 HOURS   BASIN AREA =
0.0030 SQ. MI.


*
*Add basins XM2 XD2 M3 XD1 M4 basin-routing
ADD HYD             ID=12  HYD=XM2_XD2_M3_XD1_M4  ID=9  ID=11
PRINT HYD           ID=12  CODE=1
```

```
                                                HYDROGRAPH FROM AREA XM2_XD2_M3_XD1_M4


        RUNOFF VOLUME =     1.48792 INCHES     =       0.3924 ACRE-FEET
        PEAK DISCHARGE RATE =      11.14 CFS  AT   1.500 HOURS   BASIN AREA =
0.0049 SQ. MI.



    *
    *Add basins M1 XM1 basin-routing
    ADD HYD             ID=13  HYD=M1_XM1  ID=6  ID=7
    PRINT HYD           ID=13  CODE=1

                                                HYDROGRAPH FROM AREA M1_XM1



        RUNOFF VOLUME =     1.84144 INCHES     =       0.2385 ACRE-FEET
        PEAK DISCHARGE RATE =       6.20 CFS  AT   1.500 HOURS   BASIN AREA =
0.0024 SQ. MI.



    *
    COMPUTE NM HYD      ID=14  HYD=N  DA=0.00367838
                        A B C D  15  0  85  0
                        TP=0.13330   MASS RAIN=-1

         K =  0.114133HR    TP =  0.133300HR    K/TP RATIO =  0.856211     SHAPE
CONSTANT, N =  4.154749
         UNIT PEAK =   10.082    CFS   UNIT VOLUME =    1.000       B =   365.36
 P60 = 1.8000
         AREA =     0.003678 SQ MI    IA =   0.39500 INCHES    INF =   0.95600
INCHES PER HOUR
         RUNOFF COMPUTED BY INITIAL ABSTRACTION/INFILTRATION NUMBER METHOD - DT =
0.050000

        BULKING FACTOR APPLIED TO HYDROGRAPH.  FACTOR =  1.10000 AT PEAK FLOW.

    PRINT HYD           ID=14  CODE=1

                                                HYDROGRAPH FROM AREA N



        RUNOFF VOLUME =     1.05739 INCHES     =       0.2074 ACRE-FEET
        PEAK DISCHARGE RATE =       7.23 CFS  AT   1.500 HOURS   BASIN AREA =
0.0037 SQ. MI.
```

```
    *
    *Add basins N XM2 XD2 M3 XD1 M4  basin-routing
    ADD HYD             ID=15  HYD=N_XM2_XD2_M3_XD1_M4  ID=12  ID=14
    PRINT HYD           ID=15  CODE=1

                                                HYDROGRAPH FROM AREA
N_XM2_XD2_M3_XD1_M4


        RUNOFF VOLUME =     1.30426 INCHES     =       0.5998 ACRE-FEET
        PEAK DISCHARGE RATE =      18.37 CFS  AT   1.500 HOURS   BASIN AREA =
0.0086 SQ. MI.



    *
    *Add basins M1 XM1 M2  basin-routing
    ADD HYD             ID=16  HYD=M1_XM1_M2  ID=8  ID=13
    PRINT HYD           ID=16  CODE=1

                                                HYDROGRAPH FROM AREA M1_XM1_M2



        RUNOFF VOLUME =     1.98804 INCHES     =       0.3219 ACRE-FEET
        PEAK DISCHARGE RATE =       8.05 CFS  AT   1.500 HOURS   BASIN AREA =
0.0030 SQ. MI.



    *
    *Add basins M1 XM1 M2 N XM2 XD2 M3 XD1 M4 basin-routing
    ADD HYD             ID=17  HYD=woodward  ID=15  ID=16
    PRINT HYD           ID=17  CODE=1

                                                HYDROGRAPH FROM AREA woodward



        RUNOFF VOLUME =     1.48230 INCHES     =       0.9217 ACRE-FEET
        PEAK DISCHARGE RATE =      26.42 CFS  AT   1.500 HOURS   BASIN AREA =
0.0117 SQ. MI.



    *
    COMPUTE NM HYD      ID=18  HYD=I1  DA=0.000621979
```

```
                        A B C D  0  0  0  100
                        TP=0.13330   MASS RAIN=-1

         K =  0.072649HR    TP =  0.133300HR    K/TP RATIO =  0.545000     SHAPE
CONSTANT, N =  7.106428
         UNIT PEAK =   2.4556    CFS   UNIT VOLUME =   0.9951       B =   526.28
 P60 = 1.8000
         AREA =     0.000622 SQ MI    IA =   0.10000 INCHES    INF =   0.04000
INCHES PER HOUR
         RUNOFF COMPUTED BY INITIAL ABSTRACTION/INFILTRATION NUMBER METHOD - DT =
0.050000

        BULKING FACTOR APPLIED TO HYDROGRAPH.  FACTOR =  1.10000 AT PEAK FLOW.

    PRINT HYD           ID=18  CODE=1

                                                HYDROGRAPH FROM AREA I1



        RUNOFF VOLUME =     2.57457 INCHES     =       0.0854 ACRE-FEET
        PEAK DISCHARGE RATE =       1.89 CFS  AT   1.500 HOURS   BASIN AREA =
0.0006 SQ. MI.



    *
    COMPUTE NM HYD      ID=19  HYD=I2  DA=0.000247657
                        A B C D  0  0  0  100
                        TP=0.13330   MASS RAIN=-1

         K =  0.072649HR    TP =  0.133300HR    K/TP RATIO =  0.545000     SHAPE
CONSTANT, N =  7.106428
         UNIT PEAK =  0.97776    CFS   UNIT VOLUME =   0.9891       B =   526.28
 P60 = 1.8000
         AREA =     0.000248 SQ MI    IA =   0.10000 INCHES    INF =   0.04000
INCHES PER HOUR
         RUNOFF COMPUTED BY INITIAL ABSTRACTION/INFILTRATION NUMBER METHOD - DT =
0.050000

        BULKING FACTOR APPLIED TO HYDROGRAPH.  FACTOR =  1.10000 AT PEAK FLOW.

    PRINT HYD           ID=19  CODE=1

                                                HYDROGRAPH FROM AREA I2



        RUNOFF VOLUME =     2.57457 INCHES     =       0.0340 ACRE-FEET
        PEAK DISCHARGE RATE =       0.76 CFS  AT   1.500 HOURS   BASIN AREA =
```

```
0.0002 SQ. MI.


    *
    *Add basins I2 I1 basin-routing
    ADD HYD             ID=20  HYD=I2_I1  ID=18  ID=19
    PRINT HYD           ID=20  CODE=1

                                            HYDROGRAPH FROM AREA I2_I1


        RUNOFF VOLUME =     2.57402 INCHES     =       0.1194 ACRE-FEET
        PEAK DISCHARGE RATE =       2.65 CFS  AT   1.500 HOURS   BASIN AREA =
0.0009 SQ. MI.


    *
    COMPUTE NM HYD      ID=1  HYD=H2  DA=0.000540774
                        A B C D  0  0  0  100
                        TP=0.13330   MASS RAIN=-1

         K =  0.072649HR    TP =  0.133300HR    K/TP RATIO =  0.545000     SHAPE
CONSTANT, N =  7.106428
         UNIT PEAK =   2.1350    CFS   UNIT VOLUME =   0.9941       B =   526.28
 P60 = 1.8000
         AREA =     0.000541 SQ MI    IA =   0.10000 INCHES    INF =   0.04000
INCHES PER HOUR
         RUNOFF COMPUTED BY INITIAL ABSTRACTION/INFILTRATION NUMBER METHOD - DT =
0.050000

        BULKING FACTOR APPLIED TO HYDROGRAPH.  FACTOR =  1.10000 AT PEAK FLOW.

    PRINT HYD           ID=1  CODE=1

                                            HYDROGRAPH FROM AREA H2


        RUNOFF VOLUME =     2.57457 INCHES     =       0.0743 ACRE-FEET
        PEAK DISCHARGE RATE =       1.65 CFS  AT   1.500 HOURS   BASIN AREA =
0.0005 SQ. MI.


    *
    *Add basins H2 I2 I1 basin-routing
    ADD HYD             ID=2  HYD=H2_I2_I1  ID=20  ID=1
```

```
    PRINT HYD           ID=2  CODE=1

                                                HYDROGRAPH FROM AREA H2_I2_I1



        RUNOFF VOLUME =     2.57407 INCHES     =       0.1936 ACRE-FEET
        PEAK DISCHARGE RATE =       4.30 CFS  AT   1.500 HOURS   BASIN AREA =
0.0014 SQ. MI.



    *
    COMPUTE NM HYD      ID=3  HYD=H1  DA=0.000254482
                        A B C D  0  0  0  100
                        TP=0.13330   MASS RAIN=-1

         K =  0.072649HR    TP =  0.133300HR    K/TP RATIO =  0.545000     SHAPE
CONSTANT, N =  7.106428
         UNIT PEAK =   1.0047    CFS   UNIT VOLUME =   0.9891       B =   526.28
 P60 = 1.8000
         AREA =     0.000254 SQ MI    IA =   0.10000 INCHES    INF =   0.04000
INCHES PER HOUR
         RUNOFF COMPUTED BY INITIAL ABSTRACTION/INFILTRATION NUMBER METHOD - DT =
0.050000

        BULKING FACTOR APPLIED TO HYDROGRAPH.  FACTOR =  1.10000 AT PEAK FLOW.

    PRINT HYD           ID=3  CODE=1

                                                HYDROGRAPH FROM AREA H1



        RUNOFF VOLUME =     2.57457 INCHES     =       0.0349 ACRE-FEET
        PEAK DISCHARGE RATE =       0.78 CFS  AT   1.500 HOURS   BASIN AREA =
0.0003 SQ. MI.



    *
    *Add basins H1 H2 I2 I1 basin-routing
    ADD HYD             ID=4  HYD=H1_H2_I2_I1  ID=2  ID=3
    PRINT HYD           ID=4  CODE=1

                                                HYDROGRAPH FROM AREA H1_H2_I2_I1



        RUNOFF VOLUME =     2.57396 INCHES     =       0.2286 ACRE-FEET
```

```
        PEAK DISCHARGE RATE =       5.08 CFS  AT   1.500 HOURS   BASIN AREA =
0.0017 SQ. MI.



    *
    COMPUTE NM HYD      ID=5  HYD=H  DA=0.000663978
                        A B C D  0  0  0  100
                        TP=0.13330   MASS RAIN=-1

         K =  0.072649HR    TP =  0.133300HR    K/TP RATIO =  0.545000     SHAPE
CONSTANT, N =  7.106428
         UNIT PEAK =   2.6214    CFS   UNIT VOLUME =   0.9951       B =   526.28
 P60 = 1.8000
         AREA =     0.000664 SQ MI    IA =   0.10000 INCHES    INF =   0.04000
INCHES PER HOUR
         RUNOFF COMPUTED BY INITIAL ABSTRACTION/INFILTRATION NUMBER METHOD - DT =
0.050000

        BULKING FACTOR APPLIED TO HYDROGRAPH.  FACTOR =  1.10000 AT PEAK FLOW.

    PRINT HYD           ID=5  CODE=1

                                                HYDROGRAPH FROM AREA H



        RUNOFF VOLUME =     2.57457 INCHES     =       0.0912 ACRE-FEET
        PEAK DISCHARGE RATE =       2.02 CFS  AT   1.500 HOURS   BASIN AREA =
0.0007 SQ. MI.



    *
    *Add basins H H1 H2 I2 I1 basin-routing
    ADD HYD             ID=6  HYD=H_H1_H2_I2_I1  ID=4  ID=5
    PRINT HYD           ID=6  CODE=1

                                                HYDROGRAPH FROM AREA H_H1_H2_I2_I1



        RUNOFF VOLUME =     2.57405 INCHES     =       0.3197 ACRE-FEET
        PEAK DISCHARGE RATE =       7.10 CFS  AT   1.500 HOURS   BASIN AREA =
0.0023 SQ. MI.



    *
    COMPUTE NM HYD      ID=7  HYD=I  DA=0.000641823
```

```
                        A B C D  0  0  0  100
                        TP=0.13330   MASS RAIN=-1

         K =  0.072649HR    TP =  0.133300HR    K/TP RATIO =  0.545000     SHAPE
CONSTANT, N =  7.106428
         UNIT PEAK =   2.5340    CFS   UNIT VOLUME =   0.9951       B =   526.28
 P60 = 1.8000
         AREA =     0.000642 SQ MI    IA =   0.10000 INCHES    INF =   0.04000
INCHES PER HOUR
         RUNOFF COMPUTED BY INITIAL ABSTRACTION/INFILTRATION NUMBER METHOD - DT =
0.050000

        BULKING FACTOR APPLIED TO HYDROGRAPH.  FACTOR =  1.10000 AT PEAK FLOW.

    PRINT HYD           ID=7  CODE=1

                                                HYDROGRAPH FROM AREA I



        RUNOFF VOLUME =     2.57457 INCHES     =       0.0881 ACRE-FEET
        PEAK DISCHARGE RATE =       1.95 CFS  AT   1.500 HOURS   BASIN AREA =
0.0006 SQ. MI.



    *
    *Add basins I H H1 H2 I2 I1 basin-routing
    ADD HYD             ID=8  HYD=I_H_H1_H2_I2_I1  ID=6  ID=7
    PRINT HYD           ID=8  CODE=1

                                                HYDROGRAPH FROM AREA I_H_H1_H2_I2_I1



        RUNOFF VOLUME =     2.57410 INCHES     =       0.4078 ACRE-FEET
        PEAK DISCHARGE RATE =       9.05 CFS  AT   1.500 HOURS   BASIN AREA =
0.0030 SQ. MI.



    *
    *Add basins DetPondInE(M1 XM1 M2 N XM2 XD2 M3 XD1 M4 I H H1 H2 I2 I1) basin-rout
    ADD HYD             ID=21  HYD=DetPondInE  ID=17  ID=8
    PRINT HYD           ID=21  CODE=1

                                                HYDROGRAPH FROM AREA DetPondInE
```

```
        RUNOFF VOLUME =     1.70400 INCHES     =       1.3295 ACRE-FEET
        PEAK DISCHARGE RATE =      35.47 CFS  AT   1.500 HOURS   BASIN AREA =
0.0146 SQ. MI.



    *
    COMPUTE NM HYD      ID=9  HYD=P  DA=0.000468872
                        A B C D  0  0  0  100
                        TP=0.13330   MASS RAIN=-1

         K =  0.072649HR    TP =  0.133300HR    K/TP RATIO =  0.545000     SHAPE
CONSTANT, N =  7.106428
         UNIT PEAK =   1.8511    CFS   UNIT VOLUME =   0.9928       B =   526.28
 P60 = 1.8000
         AREA =     0.000469 SQ MI    IA =   0.10000 INCHES    INF =   0.04000
INCHES PER HOUR
         RUNOFF COMPUTED BY INITIAL ABSTRACTION/INFILTRATION NUMBER METHOD - DT =
0.050000

        BULKING FACTOR APPLIED TO HYDROGRAPH.  FACTOR =  1.10000 AT PEAK FLOW.

    PRINT HYD           ID=9  CODE=1

                                                HYDROGRAPH FROM AREA P



        RUNOFF VOLUME =     2.57457 INCHES     =       0.0644 ACRE-FEET
        PEAK DISCHARGE RATE =       1.43 CFS  AT   1.500 HOURS   BASIN AREA =
0.0005 SQ. MI.



    *
    COMPUTE NM HYD      ID=10  HYD=S  DA=0.000444064
                        A B C D  0  0  0  100
                        TP=0.13330   MASS RAIN=-1

         K =  0.072649HR    TP =  0.133300HR    K/TP RATIO =  0.545000     SHAPE
CONSTANT, N =  7.106428
         UNIT PEAK =   1.7532    CFS   UNIT VOLUME =   0.9928       B =   526.28
 P60 = 1.8000
         AREA =     0.000444 SQ MI    IA =   0.10000 INCHES    INF =   0.04000
INCHES PER HOUR
         RUNOFF COMPUTED BY INITIAL ABSTRACTION/INFILTRATION NUMBER METHOD - DT =
0.050000

        BULKING FACTOR APPLIED TO HYDROGRAPH.  FACTOR =  1.10000 AT PEAK FLOW.
```

```
    PRINT HYD           ID=10  CODE=1

                                                HYDROGRAPH FROM AREA S


        RUNOFF VOLUME =     2.57457 INCHES     =       0.0610 ACRE-FEET
        PEAK DISCHARGE RATE =       1.36 CFS  AT   1.500 HOURS   BASIN AREA =
0.0004 SQ. MI.


    *
    *Add basins S P basin-routing
    ADD HYD             ID=11  HYD=S_P  ID=9  ID=10
    PRINT HYD           ID=11  CODE=1

                                                HYDROGRAPH FROM AREA S_P


        RUNOFF VOLUME =     2.57416 INCHES     =       0.1253 ACRE-FEET
        PEAK DISCHARGE RATE =       2.79 CFS  AT   1.500 HOURS   BASIN AREA =
0.0009 SQ. MI.


    *
    COMPUTE NM HYD      ID=12  HYD=P1  DA=0.000967237
                        A B C D  0  0  10  90
                        TP=0.13330   MASS RAIN=-1

         K =  0.072649HR    TP =  0.133300HR    K/TP RATIO =  0.545000     SHAPE
CONSTANT, N =  7.106428
         UNIT PEAK =   3.4368    CFS   UNIT VOLUME =   0.9959       B =   526.28
 P60 = 1.8000
         AREA =     0.000871 SQ MI    IA =   0.10000 INCHES    INF =   0.04000
INCHES PER HOUR
         RUNOFF COMPUTED BY INITIAL ABSTRACTION/INFILTRATION NUMBER METHOD - DT =
0.050000


         K =  0.105077HR    TP =  0.133300HR    K/TP RATIO =  0.788276     SHAPE
CONSTANT, N =  4.552748
         UNIT PEAK =  0.28334    CFS   UNIT VOLUME =   0.9592       B =   390.48
 P60 = 1.8000
         AREA =     0.000097 SQ MI    IA =   0.35000 INCHES    INF =   0.83000
INCHES PER HOUR
         RUNOFF COMPUTED BY INITIAL ABSTRACTION/INFILTRATION NUMBER METHOD - DT =
0.050000
```

```
        BULKING FACTOR APPLIED TO HYDROGRAPH.  FACTOR =  1.10000 AT PEAK FLOW.

    PRINT HYD           ID=12  CODE=1

                                                HYDROGRAPH FROM AREA P1



        RUNOFF VOLUME =     2.43150 INCHES     =       0.1254 ACRE-FEET
        PEAK DISCHARGE RATE =       2.86 CFS  AT   1.500 HOURS   BASIN AREA =
0.0010 SQ. MI.



    *
    COMPUTE NM HYD      ID=13  HYD=S1  DA=0.000578041
                        A B C D  0  0  10  90
                        TP=0.13330   MASS RAIN=-1

         K =  0.072649HR    TP =  0.133300HR    K/TP RATIO =  0.545000     SHAPE
CONSTANT, N =  7.106428
         UNIT PEAK =   2.0539    CFS   UNIT VOLUME =   0.9941       B =   526.28
 P60 = 1.8000
         AREA =     0.000520 SQ MI    IA =   0.10000 INCHES    INF =   0.04000
INCHES PER HOUR
         RUNOFF COMPUTED BY INITIAL ABSTRACTION/INFILTRATION NUMBER METHOD - DT =
0.050000


         K =  0.105077HR    TP =  0.133300HR    K/TP RATIO =  0.788276     SHAPE
CONSTANT, N =  4.552748
         UNIT PEAK =  0.16933    CFS   UNIT VOLUME =   0.9334       B =   390.48
 P60 = 1.8000
         AREA =     0.000058 SQ MI    IA =   0.35000 INCHES    INF =   0.83000
INCHES PER HOUR
         RUNOFF COMPUTED BY INITIAL ABSTRACTION/INFILTRATION NUMBER METHOD - DT =
0.050000

        BULKING FACTOR APPLIED TO HYDROGRAPH.  FACTOR =  1.10000 AT PEAK FLOW.

    PRINT HYD           ID=13  CODE=1

                                                HYDROGRAPH FROM AREA S1



        RUNOFF VOLUME =     2.43150 INCHES     =       0.0750 ACRE-FEET
        PEAK DISCHARGE RATE =       1.72 CFS  AT   1.500 HOURS   BASIN AREA =
0.0006 SQ. MI.
```

```
    *
    *Add basins S1 P1 basin-routing
    ADD HYD             ID=14  HYD=S1_P1  ID=12  ID=13
    PRINT HYD           ID=14  CODE=1

                                            HYDROGRAPH FROM AREA S1_P1



        RUNOFF VOLUME =     2.43119 INCHES     =       0.2004 ACRE-FEET
        PEAK DISCHARGE RATE =       4.58 CFS  AT   1.500 HOURS   BASIN AREA =
0.0015 SQ. MI.



    *
    *Add basins S P S1 P1 basin-routing
    ADD HYD             ID=15  HYD=S1_P1_S_P  ID=11  ID=14
    PRINT HYD           ID=15  CODE=1

                                            HYDROGRAPH FROM AREA S1_P1_S_P



        RUNOFF VOLUME =     2.48428 INCHES     =       0.3257 ACRE-FEET
        PEAK DISCHARGE RATE =       7.37 CFS  AT   1.500 HOURS   BASIN AREA =
0.0025 SQ. MI.



    *
    COMPUTE NM HYD      ID=16  HYD=T  DA=0.00126173
                        A B C D   0  0  0  100
                        TP=0.13330   MASS RAIN=-1

         K =  0.072649HR    TP =  0.133300HR    K/TP RATIO =  0.545000     SHAPE
CONSTANT, N =  7.106428
         UNIT PEAK =   4.9814    CFS   UNIT VOLUME =   0.9971       B =   526.28
 P60 = 1.8000
         AREA =     0.001262 SQ MI    IA =   0.10000 INCHES    INF =   0.04000
INCHES PER HOUR
         RUNOFF COMPUTED BY INITIAL ABSTRACTION/INFILTRATION NUMBER METHOD - DT =
0.050000

        BULKING FACTOR APPLIED TO HYDROGRAPH.  FACTOR =  1.10000 AT PEAK FLOW.

    PRINT HYD           ID=16  CODE=1
```

```
                                                HYDROGRAPH FROM AREA T


        RUNOFF VOLUME =     2.57457 INCHES     =       0.1732 ACRE-FEET
        PEAK DISCHARGE RATE =       3.83 CFS  AT   1.500 HOURS   BASIN AREA =
0.0013 SQ. MI.



    *
    *Add basins T S1 P1 S P basin-routing
    ADD HYD             ID=17  HYD=T_S1_P1_S_P  ID=15  ID=16
    PRINT HYD           ID=17  CODE=1

                                                HYDROGRAPH FROM AREA T_S1_P1_S_P


        RUNOFF VOLUME =     2.51483 INCHES     =       0.4989 ACRE-FEET
        PEAK DISCHARGE RATE =      11.20 CFS  AT   1.500 HOURS   BASIN AREA =
0.0037 SQ. MI.



    *
    COMPUTE NM HYD      ID=18  HYD=Q1  DA=0.000194272
                        A B C D  0  0  10  90
                        TP=0.13330   MASS RAIN=-1

         K =  0.072649HR    TP =  0.133300HR    K/TP RATIO =  0.545000     SHAPE
CONSTANT, N =  7.106428
         UNIT PEAK =  0.69030    CFS   UNIT VOLUME =   0.9832       B =   526.28
 P60 = 1.8000
         AREA =     0.000175 SQ MI    IA =   0.10000 INCHES    INF =   0.04000
INCHES PER HOUR
         RUNOFF COMPUTED BY INITIAL ABSTRACTION/INFILTRATION NUMBER METHOD - DT =
0.050000


         K =  0.105077HR    TP =  0.133300HR    K/TP RATIO =  0.788276     SHAPE
CONSTANT, N =  4.552748
         UNIT PEAK =  0.56909E-01CFS   UNIT VOLUME =   0.8918       B =   390.48
 P60 = 1.8000
         AREA =     0.000019 SQ MI    IA =   0.35000 INCHES    INF =   0.83000
INCHES PER HOUR
         RUNOFF COMPUTED BY INITIAL ABSTRACTION/INFILTRATION NUMBER METHOD - DT =
0.050000
```

```
        BULKING FACTOR APPLIED TO HYDROGRAPH.  FACTOR =  1.10000 AT PEAK FLOW.

    PRINT HYD           ID=18  CODE=1

                                                HYDROGRAPH FROM AREA Q1



        RUNOFF VOLUME =     2.43150 INCHES     =       0.0252 ACRE-FEET
        PEAK DISCHARGE RATE =       0.58 CFS  AT   1.500 HOURS   BASIN AREA =
0.0002 SQ. MI.



    *
    COMPUTE NM HYD      ID=19  HYD=R1  DA=0.0003026
                        A B C D   0  0  10  90
                        TP=0.13330   MASS RAIN=-1

         K =  0.072649HR    TP =  0.133300HR    K/TP RATIO =  0.545000     SHAPE
CONSTANT, N =  7.106428
         UNIT PEAK =   1.0752    CFS   UNIT VOLUME =   0.9891       B =   526.28
 P60 = 1.8000
         AREA =     0.000272 SQ MI    IA =   0.10000 INCHES    INF =   0.04000
INCHES PER HOUR
         RUNOFF COMPUTED BY INITIAL ABSTRACTION/INFILTRATION NUMBER METHOD - DT =
0.050000


         K =  0.105077HR    TP =  0.133300HR    K/TP RATIO =  0.788276     SHAPE
CONSTANT, N =  4.552748
         UNIT PEAK =  0.88642E-01CFS   UNIT VOLUME =   0.8918       B =   390.48
 P60 = 1.8000
         AREA =     0.000030 SQ MI    IA =   0.35000 INCHES    INF =   0.83000
INCHES PER HOUR
         RUNOFF COMPUTED BY INITIAL ABSTRACTION/INFILTRATION NUMBER METHOD - DT =
0.050000

        BULKING FACTOR APPLIED TO HYDROGRAPH.  FACTOR =  1.10000 AT PEAK FLOW.

    PRINT HYD           ID=19  CODE=1

                                                HYDROGRAPH FROM AREA R1



        RUNOFF VOLUME =     2.43150 INCHES     =       0.0392 ACRE-FEET
        PEAK DISCHARGE RATE =       0.91 CFS  AT   1.500 HOURS   BASIN AREA =
0.0003 SQ. MI.
```

```
    *
    *Add basins Q1 R1 basin-routing
    ADD HYD             ID=20  HYD=Q1_R1  ID=18  ID=19
    PRINT HYD           ID=20  CODE=1

                                                HYDROGRAPH FROM AREA Q1_R1



        RUNOFF VOLUME =     2.42693 INCHES     =       0.0643 ACRE-FEET
        PEAK DISCHARGE RATE =       1.49 CFS  AT   1.500 HOURS   BASIN AREA =
0.0005 SQ. MI.



    *
    COMPUTE NM HYD      ID=1  HYD=Q  DA=0.000793384
                        A B C D  0  0  8  92
                        TP=0.13330   MASS RAIN=-1

         K =  0.072649HR    TP =  0.133300HR    K/TP RATIO =  0.545000     SHAPE
CONSTANT, N =  7.106428
         UNIT PEAK =   2.8817    CFS   UNIT VOLUME =   0.9951       B =   526.28
 P60 = 1.8000
         AREA =     0.000730 SQ MI    IA =   0.10000 INCHES    INF =   0.04000
INCHES PER HOUR
         RUNOFF COMPUTED BY INITIAL ABSTRACTION/INFILTRATION NUMBER METHOD - DT =
0.050000


         K =  0.105077HR    TP =  0.133300HR    K/TP RATIO =  0.788276     SHAPE
CONSTANT, N =  4.552748
         UNIT PEAK =  0.18593    CFS   UNIT VOLUME =   0.9334       B =   390.48
 P60 = 1.8000
         AREA =     0.000063 SQ MI    IA =   0.35000 INCHES    INF =   0.83000
INCHES PER HOUR
         RUNOFF COMPUTED BY INITIAL ABSTRACTION/INFILTRATION NUMBER METHOD - DT =
0.050000

        BULKING FACTOR APPLIED TO HYDROGRAPH.  FACTOR =  1.10000 AT PEAK FLOW.

    PRINT HYD           ID=1  CODE=1

                                                HYDROGRAPH FROM AREA Q



        RUNOFF VOLUME =     2.46011 INCHES     =       0.1041 ACRE-FEET
```

```
        PEAK DISCHARGE RATE =       2.37 CFS  AT   1.500 HOURS   BASIN AREA =
0.0008 SQ. MI.



    *
    COMPUTE NM HYD      ID=2  HYD=R  DA=0.000582811
                        A B C D   0  0  10  90
                        TP=0.13330   MASS RAIN=-1

         K =  0.072649HR    TP =  0.133300HR    K/TP RATIO =  0.545000     SHAPE
CONSTANT, N =  7.106428
         UNIT PEAK =   2.0709    CFS   UNIT VOLUME =   0.9941       B =   526.28
 P60 = 1.8000
         AREA =     0.000525 SQ MI    IA =   0.10000 INCHES    INF =   0.04000
INCHES PER HOUR
         RUNOFF COMPUTED BY INITIAL ABSTRACTION/INFILTRATION NUMBER METHOD - DT =
0.050000


         K =  0.105077HR    TP =  0.133300HR    K/TP RATIO =  0.788276     SHAPE
CONSTANT, N =  4.552748
         UNIT PEAK =  0.17073    CFS   UNIT VOLUME =   0.9334       B =   390.48
 P60 = 1.8000
         AREA =     0.000058 SQ MI    IA =   0.35000 INCHES    INF =   0.83000
INCHES PER HOUR
         RUNOFF COMPUTED BY INITIAL ABSTRACTION/INFILTRATION NUMBER METHOD - DT =
0.050000

        BULKING FACTOR APPLIED TO HYDROGRAPH.  FACTOR =  1.10000 AT PEAK FLOW.

    PRINT HYD           ID=2  CODE=1

                                                HYDROGRAPH FROM AREA R



        RUNOFF VOLUME =     2.43150 INCHES     =       0.0756 ACRE-FEET
        PEAK DISCHARGE RATE =       1.73 CFS  AT   1.500 HOURS   BASIN AREA =
0.0006 SQ. MI.



    *
    *Add basins Q R basin-routing
    ADD HYD             ID=3  HYD=Q_R  ID=1  ID=2
    PRINT HYD           ID=3  CODE=1

                                                HYDROGRAPH FROM AREA Q_R
```

```
        RUNOFF VOLUME =     2.44768 INCHES     =       0.1797 ACRE-FEET
        PEAK DISCHARGE RATE =       4.10 CFS  AT   1.500 HOURS   BASIN AREA =
0.0014 SQ. MI.



    *
    *Add basins Q R Q1 R1 basin-routing
    ADD HYD             ID=4  HYD=Q_R_Q1_R1  ID=20  ID=3
    PRINT HYD           ID=4  CODE=1

                                            HYDROGRAPH FROM AREA Q_R_Q1_R1



        RUNOFF VOLUME =     2.44217 INCHES     =       0.2440 ACRE-FEET
        PEAK DISCHARGE RATE =       5.59 CFS  AT   1.500 HOURS   BASIN AREA =
0.0019 SQ. MI.



    *
    *Add basins Q R Q1 R1 T S1 P1 S P basin-routing
    ADD HYD             ID=5  HYD=broadway  ID=17  ID=4
    PRINT HYD           ID=5  CODE=1

                                            HYDROGRAPH FROM AREA broadway



        RUNOFF VOLUME =     2.49050 INCHES     =       0.7429 ACRE-FEET
        PEAK DISCHARGE RATE =      16.79 CFS  AT   1.500 HOURS   BASIN AREA =
0.0056 SQ. MI.



    *
    COMPUTE NM HYD      ID=6  HYD=XC  DA=0.004401217
                        A B C D   0  0  80  20
                        TP=0.13330   MASS RAIN=-1

         K =  0.072649HR    TP =  0.133300HR    K/TP RATIO =  0.545000     SHAPE
CONSTANT, N =  7.106428
         UNIT PEAK =   3.4752    CFS   UNIT VOLUME =   0.9959       B =   526.28
 P60 = 1.8000
         AREA =     0.000880 SQ MI    IA =   0.10000 INCHES    INF =   0.04000
INCHES PER HOUR
         RUNOFF COMPUTED BY INITIAL ABSTRACTION/INFILTRATION NUMBER METHOD - DT =
```

```
0.050000


         K =  0.105077HR    TP =  0.133300HR    K/TP RATIO =  0.788276     SHAPE
CONSTANT, N =  4.552748
         UNIT PEAK =   10.314    CFS   UNIT VOLUME =    1.001       B =   390.48
 P60 = 1.8000
         AREA =     0.003521 SQ MI    IA =   0.35000 INCHES    INF =   0.83000
INCHES PER HOUR
         RUNOFF COMPUTED BY INITIAL ABSTRACTION/INFILTRATION NUMBER METHOD - DT =
0.050000

        BULKING FACTOR APPLIED TO HYDROGRAPH.  FACTOR =  1.10000 AT PEAK FLOW.

    PRINT HYD           ID=6  CODE=1

                                                HYDROGRAPH FROM AREA XC



        RUNOFF VOLUME =     1.42997 INCHES     =       0.3357 ACRE-FEET
        PEAK DISCHARGE RATE =      10.16 CFS  AT   1.500 HOURS   BASIN AREA =
0.0044 SQ. MI.



    *
    *Add basins Q R Q1 R1 T S1 P1 S P XC basin-routing
    ADD HYD             ID=7  HYD=broadway XC  ID=5  ID=6
    PRINT HYD           ID=7  CODE=1

                                                HYDROGRAPH FROM AREA broadway



        RUNOFF VOLUME =     2.02344 INCHES     =       1.0785 ACRE-FEET
        PEAK DISCHARGE RATE =      26.95 CFS  AT   1.500 HOURS   BASIN AREA =
0.0100 SQ. MI.



    *
    COMPUTE NM HYD      ID=8  HYD=D  DA=0.000317857
                        A B C D   0  0  0  100
                        TP=0.13330   MASS RAIN=-1

         K =  0.072649HR    TP =  0.133300HR    K/TP RATIO =  0.545000     SHAPE
CONSTANT, N =  7.106428
         UNIT PEAK =   1.2549    CFS   UNIT VOLUME =   0.9911       B =   526.28
 P60 = 1.8000
```

```
         AREA =     0.000318 SQ MI    IA =   0.10000 INCHES    INF =   0.04000
INCHES PER HOUR
         RUNOFF COMPUTED BY INITIAL ABSTRACTION/INFILTRATION NUMBER METHOD - DT =
0.050000

        BULKING FACTOR APPLIED TO HYDROGRAPH.  FACTOR =  1.10000 AT PEAK FLOW.

    PRINT HYD           ID=8  CODE=1

                                                HYDROGRAPH FROM AREA D



        RUNOFF VOLUME =     2.57457 INCHES     =       0.0436 ACRE-FEET
        PEAK DISCHARGE RATE =       0.97 CFS  AT   1.500 HOURS   BASIN AREA =
0.0003 SQ. MI.



    *
    COMPUTE NM HYD      ID=9  HYD=C  DA=0.00037726
                        A B C D   0  0  0  100
                        TP=0.13330   MASS RAIN=-1

         K =  0.072649HR    TP =  0.133300HR    K/TP RATIO =  0.545000     SHAPE
CONSTANT, N =  7.106428
         UNIT PEAK =   1.4894    CFS   UNIT VOLUME =   0.9928       B =   526.28
 P60 = 1.8000
         AREA =     0.000377 SQ MI    IA =   0.10000 INCHES    INF =   0.04000
INCHES PER HOUR
         RUNOFF COMPUTED BY INITIAL ABSTRACTION/INFILTRATION NUMBER METHOD - DT =
0.050000

        BULKING FACTOR APPLIED TO HYDROGRAPH.  FACTOR =  1.10000 AT PEAK FLOW.

    PRINT HYD           ID=9  CODE=1

                                                HYDROGRAPH FROM AREA C



        RUNOFF VOLUME =     2.57457 INCHES     =       0.0518 ACRE-FEET
        PEAK DISCHARGE RATE =       1.15 CFS  AT   1.500 HOURS   BASIN AREA =
0.0004 SQ. MI.



    *
    *Add basins D C basin-routing
    ADD HYD             ID=10  HYD=D_C  ID=8  ID=9
```

```
    PRINT HYD           ID=10  CODE=1

                                                HYDROGRAPH FROM AREA D_C



        RUNOFF VOLUME =     2.57406 INCHES     =       0.0954 ACRE-FEET
        PEAK DISCHARGE RATE =       2.12 CFS  AT   1.500 HOURS   BASIN AREA =
0.0007 SQ. MI.



    *
    *Add basins D C Q R Q1 R1 T S1 P1 S P XC basin-routing
    ADD HYD             ID=11  HYD=Broadway Sun  ID=7  ID=10
    PRINT HYD           ID=11  CODE=1

                                                HYDROGRAPH FROM AREA Broadway



        RUNOFF VOLUME =     2.05925 INCHES     =       1.1740 ACRE-FEET
        PEAK DISCHARGE RATE =      29.07 CFS  AT   1.500 HOURS   BASIN AREA =
0.0107 SQ. MI.



    *
    COMPUTE NM HYD      ID=12  HYD=G1  DA=0.001237166
                        A B C D   0  0  0  100
                        TP=0.13330   MASS RAIN=-1

         K =  0.072649HR    TP =  0.133300HR    K/TP RATIO =  0.545000     SHAPE
CONSTANT, N =  7.106428
         UNIT PEAK =   4.8844    CFS   UNIT VOLUME =   0.9971       B =   526.28
 P60 = 1.8000
         AREA =     0.001237 SQ MI    IA =   0.10000 INCHES    INF =   0.04000
INCHES PER HOUR
         RUNOFF COMPUTED BY INITIAL ABSTRACTION/INFILTRATION NUMBER METHOD - DT =
0.050000

        BULKING FACTOR APPLIED TO HYDROGRAPH.  FACTOR =  1.10000 AT PEAK FLOW.

    PRINT HYD           ID=12  CODE=1

                                                HYDROGRAPH FROM AREA G1



        RUNOFF VOLUME =     2.57457 INCHES     =       0.1699 ACRE-FEET
```

```
        PEAK DISCHARGE RATE =       3.76 CFS  AT   1.500 HOURS   BASIN AREA =
0.0012 SQ. MI.



    *
    COMPUTE NM HYD      ID=13  HYD=G  DA=0.001068715
                        A B C D   0  0  0  100
                        TP=0.13330   MASS RAIN=-1

         K =  0.072649HR    TP =  0.133300HR    K/TP RATIO =  0.545000     SHAPE
CONSTANT, N =  7.106428
         UNIT PEAK =   4.2193    CFS   UNIT VOLUME =   0.9966       B =   526.28
 P60 = 1.8000
         AREA =     0.001069 SQ MI    IA =   0.10000 INCHES    INF =   0.04000
INCHES PER HOUR
         RUNOFF COMPUTED BY INITIAL ABSTRACTION/INFILTRATION NUMBER METHOD - DT =
0.050000

        BULKING FACTOR APPLIED TO HYDROGRAPH.  FACTOR =  1.10000 AT PEAK FLOW.

    PRINT HYD           ID=13  CODE=1

                                                HYDROGRAPH FROM AREA G



        RUNOFF VOLUME =     2.57457 INCHES     =       0.1467 ACRE-FEET
        PEAK DISCHARGE RATE =       3.25 CFS  AT   1.500 HOURS   BASIN AREA =
0.0011 SQ. MI.



    *
    *Add basins G1 G basin-routing
    ADD HYD             ID=14  HYD=G1_G  ID=12  ID=13
    PRINT HYD           ID=14  CODE=1

                                                HYDROGRAPH FROM AREA G1_G



        RUNOFF VOLUME =     2.57435 INCHES     =       0.3166 ACRE-FEET
        PEAK DISCHARGE RATE =       7.01 CFS  AT   1.500 HOURS   BASIN AREA =
0.0023 SQ. MI.



    *
    *Add basins G1 G D C Q R Q1 R1 T S1 P1 S P XC basin-routing
```

```
    ADD HYD             ID=15  HYD=DetPondInW  ID=11  ID=14
    PRINT HYD           ID=15  CODE=1

                                                HYDROGRAPH FROM AREA DetPondInW



        RUNOFF VOLUME =     2.15065 INCHES     =       1.4906 ACRE-FEET
        PEAK DISCHARGE RATE =      36.08 CFS  AT   1.500 HOURS   BASIN AREA =
0.0130 SQ. MI.



    *
    *Add basins G1 G D C Q R Q1 R1 T S1 P1 S P XC M1 XM1 M2 N XM2 XD2 M3 XD1 M4 I H
    ADD HYD             ID=16  HYD=DetPondInSS  ID=21  ID=15
    PRINT HYD           ID=16  CODE=1

                                                HYDROGRAPH FROM AREA DetPondInSS



        RUNOFF VOLUME =     1.91411 INCHES     =       2.8201 ACRE-FEET
        PEAK DISCHARGE RATE =      71.56 CFS  AT   1.500 HOURS   BASIN AREA =
0.0276 SQ. MI.



    *
    COMPUTE NM HYD      ID=17  HYD=XJ  DA=0.007554964
                        A B C D    30  33  37  0
                        TP=0.13330   MASS RAIN=-1

         K =  0.132147HR    TP =  0.133300HR    K/TP RATIO =  0.991350     SHAPE
CONSTANT, N =  3.561352
         UNIT PEAK =   18.408    CFS   UNIT VOLUME =    1.000       B =   324.79
 P60 = 1.8000
         AREA =     0.007555 SQ MI    IA =   0.48950 INCHES    INF =   1.22060
INCHES PER HOUR
         RUNOFF COMPUTED BY INITIAL ABSTRACTION/INFILTRATION NUMBER METHOD - DT =
0.050000

        BULKING FACTOR APPLIED TO HYDROGRAPH.  FACTOR =  1.10000 AT PEAK FLOW.

    PRINT HYD           ID=17  CODE=1

                                                HYDROGRAPH FROM AREA XJ
```

```
        RUNOFF VOLUME =     0.90246 INCHES     =       0.3636 ACRE-FEET
        PEAK DISCHARGE RATE =      12.48 CFS  AT   1.500 HOURS   BASIN AREA =
0.0076 SQ. MI.



    *
    COMPUTE NM HYD      ID=18  HYD=XJ1  DA=0.0104488
                        A B C D    0  75  25  0
                        TP=0.13330   MASS RAIN=-1

         K =  0.125437HR    TP =  0.133300HR    K/TP RATIO =  0.941013     SHAPE
CONSTANT, N =  3.757359
         UNIT PEAK =   26.546    CFS   UNIT VOLUME =    1.001       B =   338.66
 P60 = 1.8000
         AREA =     0.010449 SQ MI    IA =   0.46250 INCHES    INF =   1.14500
INCHES PER HOUR
         RUNOFF COMPUTED BY INITIAL ABSTRACTION/INFILTRATION NUMBER METHOD - DT =
0.050000

        BULKING FACTOR APPLIED TO HYDROGRAPH.  FACTOR =  1.10000 AT PEAK FLOW.

    PRINT HYD           ID=18  CODE=1

                                                HYDROGRAPH FROM AREA XJ1



        RUNOFF VOLUME =     0.94796 INCHES     =       0.5283 ACRE-FEET
        PEAK DISCHARGE RATE =      18.34 CFS  AT   1.500 HOURS   BASIN AREA =
0.0104 SQ. MI.



    *
    *Add basins XJ1 XJ basin-routing
    ADD HYD             ID=19  HYD=XJ1_XJ  ID=17  ID=18
    PRINT HYD           ID=19  CODE=1

                                                HYDROGRAPH FROM AREA XJ1_XJ



        RUNOFF VOLUME =     0.92886 INCHES     =       0.8919 ACRE-FEET
        PEAK DISCHARGE RATE =      30.82 CFS  AT   1.500 HOURS   BASIN AREA =
0.0180 SQ. MI.



    *
```

```
*Add basins XJ1 XJ G1 G D C Q R Q1 R1 T S1 P1 S P XC M1 XM1 M2 N XM2 XD2 M3 XD1
ADD HYD             ID=20  HYD=DetPondIn  ID=16  ID=19
PRINT HYD           ID=20  CODE=1

                                          HYDROGRAPH FROM AREA DetPondIn


    RUNOFF VOLUME =     1.52536 INCHES     =       3.7120 ACRE-FEET
    PEAK DISCHARGE RATE =     102.37 CFS  AT   1.500 HOURS   BASIN AREA =
0.0456 SQ. MI.



*
* pond discharges into storm sewer that discharges into the San Jose Drain
ROUTE RESERVOIR     ID=1  HYD=DetPondOut  INFLOW ID=20  CODE=5
                    OUTFLOW(cfs) STORAGE(ac ft)   ELEV(ft)
                     0.000         0.000          4934.3
                     0.430         0.600          4935
                     1.243         1.430          4936
                     3.550         2.350          4937
                     5.068         3.320          4938
                    14.530         4.350          4939
                    16.130         5.450          4940
                    17.770         6.600          4941
                    18.640         7.280          4941.5

  *  *  *  *  *  *  *  *  *  *  *  *  *  *  *  *  *

    TIME      INFLOW    ELEV      VOLUME    OUTFLOW
    (HRS)     (CFS)     (FEET)    (AC-FT)   (CFS)

     0.00       0.00   4934.30      0.000      0.00
     0.25       0.00   4934.30      0.000      0.00
     0.50       0.00   4934.30      0.000      0.00
     0.75       0.11   4934.30      0.000      0.00
     1.00       2.91   4934.34      0.032      0.02
     1.25      10.02   4934.47      0.150      0.11
     1.50     102.37   4935.63      1.120      0.94
     1.75      34.38   4937.20      2.545      3.86
     2.00      11.61   4937.54      2.872      4.37
     2.25       5.31   4937.61      2.944      4.48
     2.50       2.35   4937.60      2.930      4.46
     2.75       1.12   4937.54      2.872      4.37
     3.00       0.63   4937.46      2.801      4.26
     3.25       0.41   4937.39      2.725      4.14
     3.50       0.30   4937.31      2.648      4.02
     3.75       0.27   4937.23      2.572      3.90
     4.00       0.25   4937.15      2.498      3.78
```

4.25	0.25	4937.08	2.426	3.67
4.50	0.26	4937.01	2.356	3.56
4.75	0.27	4936.93	2.290	3.40
5.00	0.28	4936.87	2.227	3.24
5.25	0.30	4936.80	2.168	3.09
5.50	0.32	4936.74	2.112	2.95
5.75	0.34	4936.68	2.059	2.82
6.00	0.35	4936.63	2.009	2.69
6.25	0.36	4936.58	1.962	2.58
6.50	0.36	4936.53	1.917	2.46
6.75	0.35	4936.48	1.875	2.36
7.00	0.35	4936.44	1.834	2.26
7.25	0.35	4936.40	1.796	2.16
7.50	0.34	4936.36	1.759	2.07
7.75	0.34	4936.32	1.725	1.98
8.00	0.33	4936.28	1.692	1.90
8.25	0.33	4936.25	1.660	1.82
8.50	0.33	4936.22	1.630	1.74
8.75	0.32	4936.19	1.601	1.67
9.00	0.32	4936.16	1.574	1.60
9.25	0.32	4936.13	1.548	1.54
9.50	0.31	4936.10	1.523	1.48
9.75	0.31	4936.08	1.500	1.42
10.00	0.30	4936.05	1.477	1.36
10.25	0.30	4936.03	1.456	1.31
10.50	0.29	4936.01	1.436	1.26
10.75	0.29	4935.98	1.416	1.23
11.00	0.28	4935.96	1.397	1.21
11.25	0.28	4935.94	1.378	1.19
11.50	0.28	4935.91	1.359	1.17
11.75	0.27	4935.89	1.341	1.16
12.00	0.27	4935.87	1.323	1.14
12.25	0.26	4935.85	1.305	1.12
12.50	0.26	4935.83	1.287	1.10
12.75	0.25	4935.81	1.270	1.09
13.00	0.25	4935.79	1.253	1.07
13.25	0.25	4935.77	1.236	1.05
13.50	0.24	4935.75	1.219	1.04
13.75	0.24	4935.73	1.203	1.02

TIME (HRS)	INFLOW (CFS)	ELEV (FEET)	VOLUME (AC-FT)	OUTFLOW (CFS)
14.00	0.24	4935.71	1.187	1.00
14.25	0.23	4935.69	1.171	0.99
14.50	0.22	4935.67	1.156	0.97
14.75	0.22	4935.65	1.140	0.96
15.00	0.22	4935.63	1.125	0.94
15.25	0.21	4935.61	1.110	0.93
15.50	0.21	4935.60	1.095	0.92

15.75	0.20	4935.58	1.081	0.90
16.00	0.20	4935.56	1.067	0.89
16.25	0.19	4935.54	1.052	0.87
16.50	0.19	4935.53	1.039	0.86
16.75	0.18	4935.51	1.025	0.85
17.00	0.18	4935.50	1.011	0.83
17.25	0.18	4935.48	0.998	0.82
17.50	0.17	4935.46	0.985	0.81
17.75	0.17	4935.45	0.972	0.79
18.00	0.17	4935.43	0.959	0.78
18.25	0.16	4935.42	0.946	0.77
18.50	0.15	4935.40	0.934	0.76
18.75	0.15	4935.39	0.921	0.74
19.00	0.15	4935.37	0.909	0.73
19.25	0.14	4935.36	0.897	0.72
19.50	0.14	4935.34	0.885	0.71
19.75	0.13	4935.33	0.874	0.70
20.00	0.13	4935.32	0.862	0.69
20.25	0.13	4935.30	0.851	0.68
20.50	0.12	4935.29	0.839	0.66
20.75	0.12	4935.27	0.828	0.65
21.00	0.12	4935.26	0.817	0.64
21.25	0.11	4935.25	0.806	0.63
21.50	0.11	4935.24	0.796	0.62
21.75	0.10	4935.22	0.785	0.61
22.00	0.10	4935.21	0.775	0.60
22.25	0.09	4935.20	0.764	0.59
22.50	0.09	4935.19	0.754	0.58
22.75	0.08	4935.17	0.744	0.57
23.00	0.08	4935.16	0.734	0.56
23.25	0.07	4935.15	0.724	0.55
23.50	0.07	4935.14	0.714	0.54
23.75	0.06	4935.13	0.704	0.53
24.00	0.06	4935.11	0.695	0.52
24.25	0.00	4935.10	0.685	0.51
24.50	0.00	4935.09	0.674	0.50
24.75	0.00	4935.08	0.664	0.49
25.00	0.00	4935.06	0.654	0.48
25.25	0.00	4935.05	0.644	0.47
25.50	0.00	4935.04	0.634	0.46
25.75	0.00	4935.03	0.625	0.45
26.00	0.00	4935.02	0.615	0.45
26.25	0.00	4935.01	0.606	0.44
26.50	0.00	4935.00	0.597	0.43
26.75	0.00	4934.99	0.589	0.42
27.00	0.00	4934.98	0.580	0.42
27.25	0.00	4934.97	0.571	0.41
27.50	0.00	4934.96	0.563	0.40
27.75	0.00	4934.95	0.555	0.40

TIME (HRS)	INFLOW (CFS)	ELEV (FEET)	VOLUME (AC-FT)	OUTFLOW (CFS)
28.00	0.00	4934.94	0.547	0.39
28.25	0.00	4934.93	0.539	0.39
28.50	0.00	4934.92	0.531	0.38
28.75	0.00	4934.91	0.523	0.37
29.00	0.00	4934.90	0.515	0.37
29.25	0.00	4934.89	0.508	0.36
29.50	0.00	4934.88	0.500	0.36
29.75	0.00	4934.88	0.493	0.35
30.00	0.00	4934.87	0.486	0.35
30.25	0.00	4934.86	0.478	0.34
30.50	0.00	4934.85	0.471	0.34
30.75	0.00	4934.84	0.464	0.33
31.00	0.00	4934.83	0.458	0.33
31.25	0.00	4934.83	0.451	0.32
31.50	0.00	4934.82	0.444	0.32
31.75	0.00	4934.81	0.438	0.31
32.00	0.00	4934.80	0.431	0.31
32.25	0.00	4934.80	0.425	0.30
32.50	0.00	4934.79	0.419	0.30
32.75	0.00	4934.78	0.413	0.30
33.00	0.00	4934.77	0.406	0.29
33.25	0.00	4934.77	0.401	0.29
33.50	0.00	4934.76	0.395	0.28
33.75	0.00	4934.75	0.389	0.28
34.00	0.00	4934.75	0.383	0.27
34.25	0.00	4934.74	0.377	0.27
34.50	0.00	4934.73	0.372	0.27
34.75	0.00	4934.73	0.366	0.26
35.00	0.00	4934.72	0.361	0.26
35.25	0.00	4934.71	0.356	0.25
35.50	0.00	4934.71	0.351	0.25
35.75	0.00	4934.70	0.345	0.25
36.00	0.00	4934.70	0.340	0.24
36.25	0.00	4934.69	0.335	0.24
36.50	0.00	4934.69	0.330	0.24
36.75	0.00	4934.68	0.326	0.23
37.00	0.00	4934.67	0.321	0.23
37.25	0.00	4934.67	0.316	0.23
37.50	0.00	4934.66	0.311	0.22
37.75	0.00	4934.66	0.307	0.22
38.00	0.00	4934.65	0.302	0.22
38.25	0.00	4934.65	0.298	0.21
38.50	0.00	4934.64	0.293	0.21
38.75	0.00	4934.64	0.289	0.21
39.00	0.00	4934.63	0.285	0.20
39.25	0.00	4934.63	0.281	0.20
39.50	0.00	4934.62	0.277	0.20

39.75	0.00	4934.62	0.273	0.20
40.00	0.00	4934.61	0.269	0.19
40.25	0.00	4934.61	0.265	0.19
40.50	0.00	4934.60	0.261	0.19
40.75	0.00	4934.60	0.257	0.18
41.00	0.00	4934.60	0.253	0.18
41.25	0.00	4934.59	0.249	0.18
41.50	0.00	4934.59	0.246	0.18
41.75	0.00	4934.58	0.242	0.17

TIME (HRS)	INFLOW (CFS)	ELEV (FEET)	VOLUME (AC-FT)	OUTFLOW (CFS)
42.00	0.00	4934.58	0.239	0.17
42.25	0.00	4934.57	0.235	0.17
42.50	0.00	4934.57	0.232	0.17
42.75	0.00	4934.57	0.228	0.16
43.00	0.00	4934.56	0.225	0.16
43.25	0.00	4934.56	0.222	0.16
43.50	0.00	4934.55	0.218	0.16
43.75	0.00	4934.55	0.215	0.15
44.00	0.00	4934.55	0.212	0.15
44.25	0.00	4934.54	0.209	0.15
44.50	0.00	4934.54	0.206	0.15
44.75	0.00	4934.54	0.203	0.15
45.00	0.00	4934.53	0.200	0.14
45.25	0.00	4934.53	0.197	0.14
45.50	0.00	4934.53	0.194	0.14
45.75	0.00	4934.52	0.191	0.14
46.00	0.00	4934.52	0.188	0.13
46.25	0.00	4934.52	0.185	0.13
46.50	0.00	4934.51	0.183	0.13
46.75	0.00	4934.51	0.180	0.13
47.00	0.00	4934.51	0.177	0.13
47.25	0.00	4934.50	0.175	0.13
47.50	0.00	4934.50	0.172	0.12
47.75	0.00	4934.50	0.170	0.12
48.00	0.00	4934.50	0.167	0.12
48.25	0.00	4934.49	0.165	0.12
48.50	0.00	4934.49	0.162	0.12
48.75	0.00	4934.49	0.160	0.11
49.00	0.00	4934.48	0.158	0.11
49.25	0.00	4934.48	0.155	0.11
49.50	0.00	4934.48	0.153	0.11
49.75	0.00	4934.48	0.151	0.11
50.00	0.00	4934.47	0.149	0.11
50.25	0.00	4934.47	0.146	0.10
50.50	0.00	4934.47	0.144	0.10
50.75	0.00	4934.47	0.142	0.10
51.00	0.00	4934.46	0.140	0.10

51.25	0.00	4934.46	0.138	0.10
51.50	0.00	4934.46	0.136	0.10
51.75	0.00	4934.46	0.134	0.10
52.00	0.00	4934.45	0.132	0.09
52.25	0.00	4934.45	0.130	0.09
52.50	0.00	4934.45	0.128	0.09
52.75	0.00	4934.45	0.126	0.09
53.00	0.00	4934.44	0.124	0.09
53.25	0.00	4934.44	0.123	0.09
53.50	0.00	4934.44	0.121	0.09
53.75	0.00	4934.44	0.119	0.09
54.00	0.00	4934.44	0.117	0.08
54.25	0.00	4934.43	0.115	0.08
54.50	0.00	4934.43	0.114	0.08
54.75	0.00	4934.43	0.112	0.08
55.00	0.00	4934.43	0.110	0.08
55.25	0.00	4934.43	0.109	0.08
55.50	0.00	4934.42	0.107	0.08
55.75	0.00	4934.42	0.106	0.08

TIME (HRS)	INFLOW (CFS)	ELEV (FEET)	VOLUME (AC-FT)	OUTFLOW (CFS)
56.00	0.00	4934.42	0.104	0.07
56.25	0.00	4934.42	0.103	0.07
56.50	0.00	4934.42	0.101	0.07
56.75	0.00	4934.42	0.100	0.07
57.00	0.00	4934.41	0.098	0.07
57.25	0.00	4934.41	0.097	0.07
57.50	0.00	4934.41	0.095	0.07
57.75	0.00	4934.41	0.094	0.07
58.00	0.00	4934.41	0.092	0.07
58.25	0.00	4934.41	0.091	0.07
58.50	0.00	4934.40	0.090	0.06
58.75	0.00	4934.40	0.088	0.06
59.00	0.00	4934.40	0.087	0.06
59.25	0.00	4934.40	0.086	0.06
59.50	0.00	4934.40	0.085	0.06
59.75	0.00	4934.40	0.083	0.06
60.00	0.00	4934.40	0.082	0.06
60.25	0.00	4934.39	0.081	0.06
60.50	0.00	4934.39	0.080	0.06
60.75	0.00	4934.39	0.079	0.06
61.00	0.00	4934.39	0.077	0.06
61.25	0.00	4934.39	0.076	0.05
61.50	0.00	4934.39	0.075	0.05
61.75	0.00	4934.39	0.074	0.05
62.00	0.00	4934.38	0.073	0.05
62.25	0.00	4934.38	0.072	0.05
62.50	0.00	4934.38	0.071	0.05

62.75	0.00	4934.38	0.070	0.05
63.00	0.00	4934.38	0.069	0.05
63.25	0.00	4934.38	0.068	0.05
63.50	0.00	4934.38	0.067	0.05
63.75	0.00	4934.38	0.066	0.05
64.00	0.00	4934.38	0.065	0.05
64.25	0.00	4934.37	0.064	0.05
64.50	0.00	4934.37	0.063	0.05
64.75	0.00	4934.37	0.062	0.04
65.00	0.00	4934.37	0.061	0.04
65.25	0.00	4934.37	0.060	0.04
65.50	0.00	4934.37	0.059	0.04
65.75	0.00	4934.37	0.058	0.04
66.00	0.00	4934.37	0.058	0.04
66.25	0.00	4934.37	0.057	0.04
66.50	0.00	4934.37	0.056	0.04
66.75	0.00	4934.36	0.055	0.04
67.00	0.00	4934.36	0.054	0.04
67.25	0.00	4934.36	0.053	0.04
67.50	0.00	4934.36	0.053	0.04
67.75	0.00	4934.36	0.052	0.04
68.00	0.00	4934.36	0.051	0.04
68.25	0.00	4934.36	0.050	0.04
68.50	0.00	4934.36	0.050	0.04
68.75	0.00	4934.36	0.049	0.04
69.00	0.00	4934.36	0.048	0.03
69.25	0.00	4934.36	0.047	0.03
69.50	0.00	4934.35	0.047	0.03
69.75	0.00	4934.35	0.046	0.03

TIME (HRS)	INFLOW (CFS)	ELEV (FEET)	VOLUME (AC-FT)	OUTFLOW (CFS)
70.00	0.00	4934.35	0.045	0.03
70.25	0.00	4934.35	0.045	0.03
70.50	0.00	4934.35	0.044	0.03
70.75	0.00	4934.35	0.043	0.03
71.00	0.00	4934.35	0.043	0.03
71.25	0.00	4934.35	0.042	0.03
71.50	0.00	4934.35	0.042	0.03
71.75	0.00	4934.35	0.041	0.03
72.00	0.00	4934.35	0.040	0.03
72.25	0.00	4934.35	0.040	0.03
72.50	0.00	4934.35	0.039	0.03
72.75	0.00	4934.34	0.039	0.03
73.00	0.00	4934.34	0.038	0.03
73.25	0.00	4934.34	0.037	0.03
73.50	0.00	4934.34	0.037	0.03
73.75	0.00	4934.34	0.036	0.03
74.00	0.00	4934.34	0.036	0.03

74.25	0.00	4934.34	0.035	0.03
74.50	0.00	4934.34	0.035	0.02
74.75	0.00	4934.34	0.034	0.02
75.00	0.00	4934.34	0.034	0.02
75.25	0.00	4934.34	0.033	0.02
75.50	0.00	4934.34	0.033	0.02
75.75	0.00	4934.34	0.032	0.02
76.00	0.00	4934.34	0.032	0.02
76.25	0.00	4934.34	0.031	0.02
76.50	0.00	4934.34	0.031	0.02
76.75	0.00	4934.34	0.030	0.02
77.00	0.00	4934.33	0.030	0.02
77.25	0.00	4934.33	0.030	0.02
77.50	0.00	4934.33	0.029	0.02
77.75	0.00	4934.33	0.029	0.02
78.00	0.00	4934.33	0.028	0.02
78.25	0.00	4934.33	0.028	0.02
78.50	0.00	4934.33	0.027	0.02
78.75	0.00	4934.33	0.027	0.02
79.00	0.00	4934.33	0.027	0.02
79.25	0.00	4934.33	0.026	0.02
79.50	0.00	4934.33	0.026	0.02
79.75	0.00	4934.33	0.025	0.02
80.00	0.00	4934.33	0.025	0.02
80.25	0.00	4934.33	0.025	0.02
80.50	0.00	4934.33	0.024	0.02
80.75	0.00	4934.33	0.024	0.02
81.00	0.00	4934.33	0.024	0.02
81.25	0.00	4934.33	0.023	0.02
81.50	0.00	4934.33	0.023	0.02
81.75	0.00	4934.33	0.023	0.02
82.00	0.00	4934.33	0.022	0.02
82.25	0.00	4934.33	0.022	0.02
82.50	0.00	4934.33	0.022	0.02
82.75	0.00	4934.32	0.021	0.02
83.00	0.00	4934.32	0.021	0.02
83.25	0.00	4934.32	0.021	0.01
83.50	0.00	4934.32	0.020	0.01
83.75	0.00	4934.32	0.020	0.01

TIME (HRS)	INFLOW (CFS)	ELEV (FEET)	VOLUME (AC-FT)	OUTFLOW (CFS)
84.00	0.00	4934.32	0.020	0.01
84.25	0.00	4934.32	0.020	0.01
84.50	0.00	4934.32	0.019	0.01
84.75	0.00	4934.32	0.019	0.01
85.00	0.00	4934.32	0.019	0.01
85.25	0.00	4934.32	0.018	0.01
85.50	0.00	4934.32	0.018	0.01

85.75	0.00	4934.32	0.018	0.01
86.00	0.00	4934.32	0.018	0.01
86.25	0.00	4934.32	0.017	0.01
86.50	0.00	4934.32	0.017	0.01
86.75	0.00	4934.32	0.017	0.01
87.00	0.00	4934.32	0.017	0.01
87.25	0.00	4934.32	0.016	0.01
87.50	0.00	4934.32	0.016	0.01
87.75	0.00	4934.32	0.016	0.01
88.00	0.00	4934.32	0.016	0.01
88.25	0.00	4934.32	0.015	0.01
88.50	0.00	4934.32	0.015	0.01
88.75	0.00	4934.32	0.015	0.01
89.00	0.00	4934.32	0.015	0.01
89.25	0.00	4934.32	0.015	0.01
89.50	0.00	4934.32	0.014	0.01
89.75	0.00	4934.32	0.014	0.01
90.00	0.00	4934.32	0.014	0.01
90.25	0.00	4934.32	0.014	0.01
90.50	0.00	4934.32	0.013	0.01
90.75	0.00	4934.32	0.013	0.01
91.00	0.00	4934.31	0.013	0.01
91.25	0.00	4934.31	0.013	0.01
91.50	0.00	4934.31	0.013	0.01
91.75	0.00	4934.31	0.013	0.01
92.00	0.00	4934.31	0.012	0.01
92.25	0.00	4934.31	0.012	0.01
92.50	0.00	4934.31	0.012	0.01
92.75	0.00	4934.31	0.012	0.01
93.00	0.00	4934.31	0.012	0.01
93.25	0.00	4934.31	0.011	0.01
93.50	0.00	4934.31	0.011	0.01
93.75	0.00	4934.31	0.011	0.01
94.00	0.00	4934.31	0.011	0.01
94.25	0.00	4934.31	0.011	0.01
94.50	0.00	4934.31	0.011	0.01
94.75	0.00	4934.31	0.010	0.01
95.00	0.00	4934.31	0.010	0.01
95.25	0.00	4934.31	0.010	0.01
95.50	0.00	4934.31	0.010	0.01
95.75	0.00	4934.31	0.010	0.01
96.00	0.00	4934.31	0.010	0.01
96.25	0.00	4934.31	0.010	0.01
96.50	0.00	4934.31	0.009	0.01
96.75	0.00	4934.31	0.009	0.01
97.00	0.00	4934.31	0.009	0.01
97.25	0.00	4934.31	0.009	0.01
97.50	0.00	4934.31	0.009	0.01
97.75	0.00	4934.31	0.009	0.01

TIME (HRS)	INFLOW (CFS)	ELEV (FEET)	VOLUME (AC-FT)	OUTFLOW (CFS)
98.00	0.00	4934.31	0.009	0.01
98.25	0.00	4934.31	0.009	0.01
98.50	0.00	4934.31	0.008	0.01
98.75	0.00	4934.31	0.008	0.01
99.00	0.00	4934.31	0.008	0.01
99.25	0.00	4934.31	0.008	0.01
99.50	0.00	4934.31	0.008	0.01
99.75	0.00	4934.31	0.008	0.01
100.00	0.00	4934.31	0.008	0.01
100.25	0.00	4934.31	0.008	0.01
100.50	0.00	4934.31	0.007	0.01
100.75	0.00	4934.31	0.007	0.01
101.00	0.00	4934.31	0.007	0.01
101.25	0.00	4934.31	0.007	0.01
101.50	0.00	4934.31	0.007	0.01
101.75	0.00	4934.31	0.007	0.00

PEAK DISCHARGE = 4.483 CFS - PEAK OCCURS AT HOUR 2.30
MAXIMUM WATER SURFACE ELEVATION = 4937.615
MAXIMUM STORAGE = 2.9463 AC-FT INCREMENTAL TIME= 0.050000HRS

```
*
*************************************************************
*
COMPUTE NM HYD      ID=2  HYD=XV  DA=0.003050928
                    A B C D   0  0  10  90
                    TP=0.13330   MASS RAIN=-1
```

K = 0.072649HR TP = 0.133300HR K/TP RATIO = 0.545000 SHAPE CONSTANT, N = 7.106428
UNIT PEAK = 10.841 CFS UNIT VOLUME = 0.9981 B = 526.28 P60 = 1.8000
AREA = 0.002746 SQ MI IA = 0.10000 INCHES INF = 0.04000 INCHES PER HOUR
RUNOFF COMPUTED BY INITIAL ABSTRACTION/INFILTRATION NUMBER METHOD - DT = 0.050000

K = 0.105077HR TP = 0.133300HR K/TP RATIO = 0.788276 SHAPE CONSTANT, N = 4.552748
UNIT PEAK = 0.89372 CFS UNIT VOLUME = 0.9877 B = 390.48 P60 = 1.8000
AREA = 0.000305 SQ MI IA = 0.35000 INCHES INF = 0.83000 INCHES PER HOUR
RUNOFF COMPUTED BY INITIAL ABSTRACTION/INFILTRATION NUMBER METHOD - DT = 0.050000

BULKING FACTOR APPLIED TO HYDROGRAPH. FACTOR = 1.10000 AT PEAK FLOW.

```
    PRINT HYD           ID=2  CODE=1

                                                HYDROGRAPH FROM AREA XV



        RUNOFF VOLUME =     2.43150 INCHES     =       0.3956 ACRE-FEET
        PEAK DISCHARGE RATE =       8.99 CFS  AT   1.500 HOURS   BASIN AREA =
0.0031 SQ. MI.



    *
    COMPUTE NM HYD      ID=3  HYD=A  DA=0.000885059
                        A B C D   0  0  2  98
                        TP=0.13330   MASS RAIN=-1

         K =  0.072649HR    TP =  0.133300HR    K/TP RATIO =  0.545000     SHAPE
CONSTANT, N =  7.106428
         UNIT PEAK =   3.4244    CFS   UNIT VOLUME =   0.9959       B =   526.28
 P60 = 1.8000
         AREA =     0.000867 SQ MI    IA =   0.10000 INCHES    INF =   0.04000
INCHES PER HOUR
         RUNOFF COMPUTED BY INITIAL ABSTRACTION/INFILTRATION NUMBER METHOD - DT =
0.050000


         K =  0.105077HR    TP =  0.133300HR    K/TP RATIO =  0.788276     SHAPE
CONSTANT, N =  4.552748
         UNIT PEAK =  0.51853E-01CFS   UNIT VOLUME =   0.8918       B =   390.48
 P60 = 1.8000
         AREA =     0.000018 SQ MI    IA =   0.35000 INCHES    INF =   0.83000
INCHES PER HOUR
         RUNOFF COMPUTED BY INITIAL ABSTRACTION/INFILTRATION NUMBER METHOD - DT =
0.050000

        BULKING FACTOR APPLIED TO HYDROGRAPH.  FACTOR =  1.10000 AT PEAK FLOW.

    PRINT HYD           ID=3  CODE=1

                                                HYDROGRAPH FROM AREA A



        RUNOFF VOLUME =     2.54596 INCHES     =       0.1202 ACRE-FEET
        PEAK DISCHARGE RATE =       2.68 CFS  AT   1.500 HOURS   BASIN AREA =
0.0009 SQ. MI.
```

```
    *
    COMPUTE NM HYD      ID=4  HYD=B  DA=0.000822449
                        A B C D   0  0  2  98
                        TP=0.13330   MASS RAIN=-1

         K =  0.072649HR    TP =  0.133300HR    K/TP RATIO =  0.545000     SHAPE
CONSTANT, N =  7.106428
         UNIT PEAK =   3.1821    CFS   UNIT VOLUME =   0.9959       B =   526.28
 P60 = 1.8000
         AREA =     0.000806 SQ MI    IA =   0.10000 INCHES    INF =   0.04000
INCHES PER HOUR
         RUNOFF COMPUTED BY INITIAL ABSTRACTION/INFILTRATION NUMBER METHOD - DT =
0.050000


         K =  0.105077HR    TP =  0.133300HR    K/TP RATIO =  0.788276     SHAPE
CONSTANT, N =  4.552748
         UNIT PEAK =  0.48185E-01CFS   UNIT VOLUME =   0.8918       B =   390.48
 P60 = 1.8000
         AREA =     0.000016 SQ MI    IA =   0.35000 INCHES    INF =   0.83000
INCHES PER HOUR
         RUNOFF COMPUTED BY INITIAL ABSTRACTION/INFILTRATION NUMBER METHOD - DT =
0.050000

        BULKING FACTOR APPLIED TO HYDROGRAPH.  FACTOR =  1.10000 AT PEAK FLOW.

    PRINT HYD           ID=4  CODE=1

                                                HYDROGRAPH FROM AREA B



        RUNOFF VOLUME =     2.54596 INCHES     =       0.1117 ACRE-FEET
        PEAK DISCHARGE RATE =       2.49 CFS  AT   1.500 HOURS   BASIN AREA =
0.0008 SQ. MI.



    *
    *Add basins A B basin-routing
    ADD HYD             ID=5  HYD=A_B  ID=3  ID=4
    PRINT HYD           ID=5  CODE=1

                                                HYDROGRAPH FROM AREA A_B



        RUNOFF VOLUME =     2.54566 INCHES     =       0.2318 ACRE-FEET
        PEAK DISCHARGE RATE =       5.17 CFS  AT   1.500 HOURS   BASIN AREA =
```

```
0.0017 SQ. MI.


    *
    *Add basins XV DetPondOut basin-routing
    ADD HYD             ID=6  HYD=XV_DetPondOut  ID=1  ID=2
    PRINT HYD           ID=6  CODE=1

                                                HYDROGRAPH FROM AREA XV_DetPondOut


        RUNOFF VOLUME =     1.58161 INCHES     =       4.1062 ACRE-FEET
        PEAK DISCHARGE RATE =      10.04 CFS  AT   1.550 HOURS   BASIN AREA =
0.0487 SQ. MI.


    *
    *Add basins A B XV DetPondOut basin-routing
    ADD HYD             ID=7  HYD=XV_DetPondOut_A_B  ID=5  ID=6
    PRINT HYD           ID=7  CODE=1

                                                HYDROGRAPH FROM AREA XV_DetPondOut_A_B


        RUNOFF VOLUME =     1.61428 INCHES     =       4.3380 ACRE-FEET
        PEAK DISCHARGE RATE =      15.10 CFS  AT   1.500 HOURS   BASIN AREA =
0.0504 SQ. MI.


    *
    FINISH

        NORMAL PROGRAM FINISH          END TIME (HR:MIN:SEC) = 17:52:22
```

APPENDIX D

HYDROLOGY WORKSHEETS

APPENDIX D
HYDROLOGY WORKSHEETS

- Summary of Hydrology and Hydraulic Calculations
- Pond Elevation-Storage-Discharge Tables
- Hydraulic Grade Line Graphical Results
- Drop Inlet Spread Calculations

SUMMARY OF HYDROLOGY AND HYDRAULIC CALCULATIONS

Hydrology

The computer program Arid Lands Hydrology Model (AHYMO) was utilized to calculate storm water runoff volumes and flow rates for the 100-year 24-hour event, consistent with the preliminary drainage report (PDR). The AHYMO model varies from the AHYMO model from the PDR due to an increase in the number of sub basins as a result of roadway geometry and placement of drop inlets. The AHYMO model was also revised to utilize NOAA Atlas 14 precipitation values instead of NOAA Atlas 2 precipitation values.

Hydraulics

This project utilizes both New Mexico Deparetment of Transportation (NMDOT) and City of Albuquerque (COA) standard drawings. The portion of this project which utilizes NMDOT items is east of Broadway Boulevard consisting of Sunport Boulevard while the portion utilizing COA items consists of Broadway Boulevard and Woodward Road.

Drop Inlet Calculations

The computer program Hydraflow Express is an extension of AutoCAD Civil 3D and was utilized to determine inlet capacities. A number of inputs specific to the type of drop inlet were input into the program to determine inlet capacities including but not limited to the inlet type, sag or grade location, length, throat height, grate width, local depression, and cross slopes.

Sunport Boulevard generally consists of slopes between 4% and 7%. Spread did not appear to be an issue with the utilization of the single Type I inlets, as the spread did not appear to approach one driving lane in width. Drop inlets on grade within Sunport Boulevard were utilized to prevent large discharge values down at the intersection of Sunport/Broadway where a sag condition occurs.

Woodward Road and Broadway Boulevard have minimal longitudinal slope. The storm sewer lines as part of this project generally have a slope of 0.1% with minimal cover to allow for discharge to the detention pond southeast of the Broadway/Sunport intersection. Due to the shallow slopes and backwater effects from the pond once it is full, velocities are expected to be minimal during high precipitation events. Therefore, COA Type D drop inlets are proposed for this portion of the project. The thought is that drop inlets which utilize the grate opening as well as the curb opening may allow for larger debris to enter the storm sewer system in this area that most likely would not have the velocities to effectively remove that debris.

The results of these computations can be found within Appendix D including a graphical representation of the spread and a tabular results showing the efficiency of the inlet for discharge in increments of 0.25 cfs. It should be noted that spread is limited to less than one driving lane throughout the project.

Storm Sewer Calculations

The computer program Autodesk Storm and Sanitary Analysis 2018 (SSA) was utilized to model flows within the storm sewer system. It was determined that the storm sewer system within Broadway Boulevard discharging into the detention pond would require modeling of backwater effects and surcharging due to the system configuration. SSA was determined to have the ability to model what was necessary for this type of system.

In order to run the program effectively to model the necessary components of the system, many program components were created with a number of inputs. These components included junctions, conveyance links (pipes), and outfalls. Below is a brief summary of each of these components:

- Junctions were utilized where manholes or drop inlets exist throughout the system. The AHYMO discharge values were input at the junctions to represent the 100-year discharge values from sub-basins that would be entering the storm drain system at those locations.

- Conveyance links were created to connect the Junctions as they do within the plans. Input information including pipe sizes, materials, and invert elevations were assigned to each conveyance link. Junctions (manholes) were utilized as shown on the plans.
- Outfalls were utilized to represent discharge locations within the system including the San Jose Drain, Detention Pond, Water Quality Pond, and South Diversion Channel. The maximum water surface elevation reached for the detention pond within AHYMO was utilized as a control elevation for the hydraulic calculations. The 10-year water surface elevation for the San Jose Drain at the discharge location was also used as a control elevation for hydraulic calculations.

The AHYMO discharges were utilized in the inlet calculations and are shown on the design plans. The Hydraulic Grade Lines (HGL) calculated within the SSA model are shown on the design plans with the AHYMO discharges.

The results of the analysis including HGL and drop inlet graphical results and tabular results can be found within this Appendix.

Detention Pond (Southeast of Broadway/Sunport intersection												
Elevation (ft)	**Area (sf)**	**Area (ac)**	**Depth (ft)**	**Storage (cf)**	**Storage (ac-ft)**	**Q(cfs) Row 1**	**Q(cfs) Row 2**	**Q(cfs) Row 3**	**Q(cfs) Row 4**	**Q (cfs) 18" pipe**	**Q (cfs) grate**	**Q(cfs)**
4934.28	33,900	0.78	0.0	0	0.00	0	0	0.0	0.0	0.0	0.0	0.00
4935	36,180	0.83	0.7	25,229	0.58	0.849477734	0.00	0.0	0.0	0.0	0.0	0.85
4936	38,830	0.89	1.7	62,442	1.43	1.380452492	1.00	0.1	0.0	0.0	0.0	2.49
4937	41,462	0.95	2.7	102,253	2.35	1.766925204	1.49	1.1	0.3	0.0	0.0	4.73
4938	44,061	1.01	3.7	144,658	3.32	2.06459535	1.83	1.6	1.3	0.0	0.0	6.76
4939	46,679	1.07	4.7	189,675	4.35					14.5	22.1	14.53
4940	49,282	1.13	5.7	237,293	5.45					16.1	62.5	16.13
4941	51,870	1.19	6.7	287,502	6.60					17.8	114.8	17.77
4941.5	53,000	1.22	7.2	317,090	7.28					18.6	144.7	18.64

Water Quality Basin							
Elevation (ft)	**Area (sf)**	**Depth (ft)**	**Storage(cf)**	**Storage (ac-ft)**	**Q (cfs) 3-6" PVC reverse slope pipes**	**Q(cfs) spillway**	**Q(cfs) Total**
5000.38	2,125.7	0	0	0.0	0.00	0	0.0
5001	2,600.7	0.62	1,465	0.0	0.00	0	0.0
5002	3,437.4	1.62	4,408	0.1	0.00	0	0.0
5003	4,330.7	2.62	8,184	0.2	1.72	0	1.7
5004	5,280.6	3.62	12,869	0.3	3.32	58	61.2
5005	10,643.0	4.62	21,882	0.5	4.36	220	224.2
5006	11,318.0	5.62	31,902	0.7	5.20	498	502.9
5007	11,992.6	6.62	42,805	1.0	5.93	907	912.8

Structure	Invert Elevation (ft)	Rim Elevation (ft)	Max. HGL Elevation (ft)	Max. EGL Elevation (ft)
P-1	4935.56	4939.27	4936.22	4936.25
P-2	4933.50	4938.95	4934.72	4934.77
P-3	4935.10	4938.64	4935.93	4935.94
P-4	4936.86	4940.07	4937.58	4937.61
P-5	4936.43	4939.95	4937.54	4937.59
P-6	4938.64	4941.85	4939.63	4939.68
P-7	4938.21	4941.73	4939.53	4939.63
P-8	4936.15	4939.69	4937.84	4938.00
P-9	4936.06	4939.85	4937.76	4937.82
P-10	4936.15	4939.69	4937.77	4937.78
P-11	4935.71	4939.27	4938.65	4938.83
P-12	4935.02	4939.16	4937.71	4937.94
P-13	4935.12	4938.73	4937.76	4937.87
P-13A	4936.00	4940.00	4937.81	4937.82
P-14	4934.86	4940.15	4937.58	4943.59
P-15	4934.69	4941.20	4937.44	4938.58
P-16	4934.51	4942.29	4937.34	4937.67
P-17A	4934.29	4941.50	4935.45	4935.89
P-18	4934.19	4943.82	4935.43	4936.85
P-19	4933.90	4941.18	4935.39	4936.58
P-19A	4933.83	4940.29	4935.34	4937.32
P-20	4933.80	4940.17	4935.34	4935.77
P-21	4936.02	4939.56	4939.56	4939.83
P-22	4935.67	4939.66	4938.08	4938.34
P-23	4936.01	4939.55	4938.08	4938.10
P-24	4935.26	4938.97	4938.97	4939.22
P-25	4935.13	4939.21	4937.69	4937.86
P-26	4935.55	4938.99	4937.70	4938.88
P-27	4993.88	4997.44	4994.08	4995.04
P-28	4992.82	4996.61	4993.30	4994.54
P-29	4992.26	4995.87	4993.19	4997.21
P-30	4992.03	4995.66	4992.46	4993.62
P-31	4969.11	4973.16	4969.65	4977.51
P-32	4965.60	4970.65	4966.57	4966.44
P-33	4954.75	4968.45	4955.92	4955.93
P-34	5025.32	5029.32	5026.11	5025.99
P-35	5025.12	5029.28	5026.09	5025.96
P-36	5024.72	5028.13	5025.14	5025.21
P-37	5024.77	5028.38	5025.39	5025.36
P-38	5009.22	5018.18	5010.58	5010.59
P-39	4999.89	5004.94	5002.46	5002.47
P-40	4998.82	5004.45	5001.87	5001.87
P-41	5018.59	5032.59	5020.14	5020.14
P-41A	5009.63	5017.68	5013.15	5013.15
P-45	4960.61	4965.00	4965.00	4967.50
P-45A	4963.68	4967.52	4964.78	4964.99
P-45B	4963.46	4967.34	4964.60	4964.67
P-47	4982.48	4987.48	4982.97	4983.04
P-48	4978.35	4984.38	4982.94	4983.11

Storm Drain						
Storm Drain	**Upstream Structure**	**Downstream Structure**	**Average Slope %**	**Diameter (in)**	**Q, Peak Discharge, AHYMO (cfs)**	**Velocity (ft/s)**
SD-1	P-1	P-2	0.5000	18	2.5	1.4
SD-2	P-3	P-2	0.5000	18	3.2	1.8
SD-3	P-19	P-19A	0.1000	18	1.5	0.8
SD-3A	P-19A	P-20	0.1300	18	1.5	1.5
SD-4	P-18	P-19	0.1000	18	1.5	1.8
SD-5	P-14	P-15	0.1000	42	16.8	1.7
SD-6	P-4	P-5	0.5100	24	1.0	2.5
SD-7	P-5	P-15	0.4200	24	2.1	3.2
SD-8	P-15	P-16	0.1000	42	18.9	2.0
SD-9	P-25	P-14	0.1200	36	5.6	0.8
SD-10	P-6	P-7	0.5000	24	3.8	3.4
SD-11	P-7	P-16	0.5000	24	7.0	3.8
SD-12	P-16	P-17DetPondwest	0.5300	42	25.9	2.7
SD-13	P-17A	P-18	0.1100	18	1.5	0.8
SD-14	P-33	P-46DetPondEast	8.0000	24	33.5	19.7
SD-15	P-45	P-33	0.5200	24	26.4	8.6
SD-15A	P-45A	P-45B	0.5000	24	6.4	4.6
SD-15B	P-45B	P-45C	0.8300	24	8.3	5.3
SD-16	P-32	P-33	6.4300	24	9.1	9.6
SD-17	P-31	P-32	6.0200	24	7.1	8.7
SD-18	P-30	P-31	7.3700	24	5.1	11.3
SD-19	P-29	P-30	2.4000	24	4.3	5.3
SD-20	P-28	P-29	1.2700	24	2.7	4.2
SD-21	P-27	P-28	3.3700	24	0.8	4.1
SD-21A	P-34	P-35	0.4800	24	0.9	1.3
SD-22	P-35	P-36	0.5100	24	4.6	4.0
SD-23	P-37	P-36	0.5000	24	1.8	3.3
SD-24	P-36	WQPOut	34.7400	18	6.4	8.7
SD-25	P-40	P-40A	0.5500	42	62.6	7.9
SD-26	P-39	P-40	1.1300	42	62.6	9.1
SD-27	P-38	P-39	4.4800	36	56.0	16.3
SD-28	P-41A	P-38	0.5000	36	55.5	8.8
SD-28A	P-41	P-41A	7.9000	36	52.0	22.6
SD-29	P-8	P-9	0.1000	18	1.4	0.8
SD-30	P-10	P-9	0.6000	18	1.4	0.8
SD-31	P-9	P-12	0.2000	30	2.8	0.6
SD-31A	P-11	P-12	0.5100	24	1.7	0.5
SD-31B	P-13	P-12	0.1200	24	6.7	2.1
SD-32	P-12	P-14	0.1000	36	11.2	1.6
SD-33	P-24	P-25	0.1100	24	2.4	0.8
SD-34	P-26	P-25	12.3300	18	1.7	1.0
SD-35	P-22	P-25	0.1400	36	1.5	0.2
SD-36	P-23	P-22	0.3300	18	0.9	0.5
SD-37	P-21	P-22	0.5100	18	0.6	0.3
SD-38	P-47	P-48	6.1200	24	6.88	12.7
SD-39	P-48	P-49	0.2100	24	11.14	3.6
SD-40	P-13A	P-13	6.1800	18	3.83	2.2
Existing	P-20	P-2	0.1400	30	10.4	2.1
toSanJoseDrain	P-2	San Jose Drain	0.6800	30	16.1	3.3

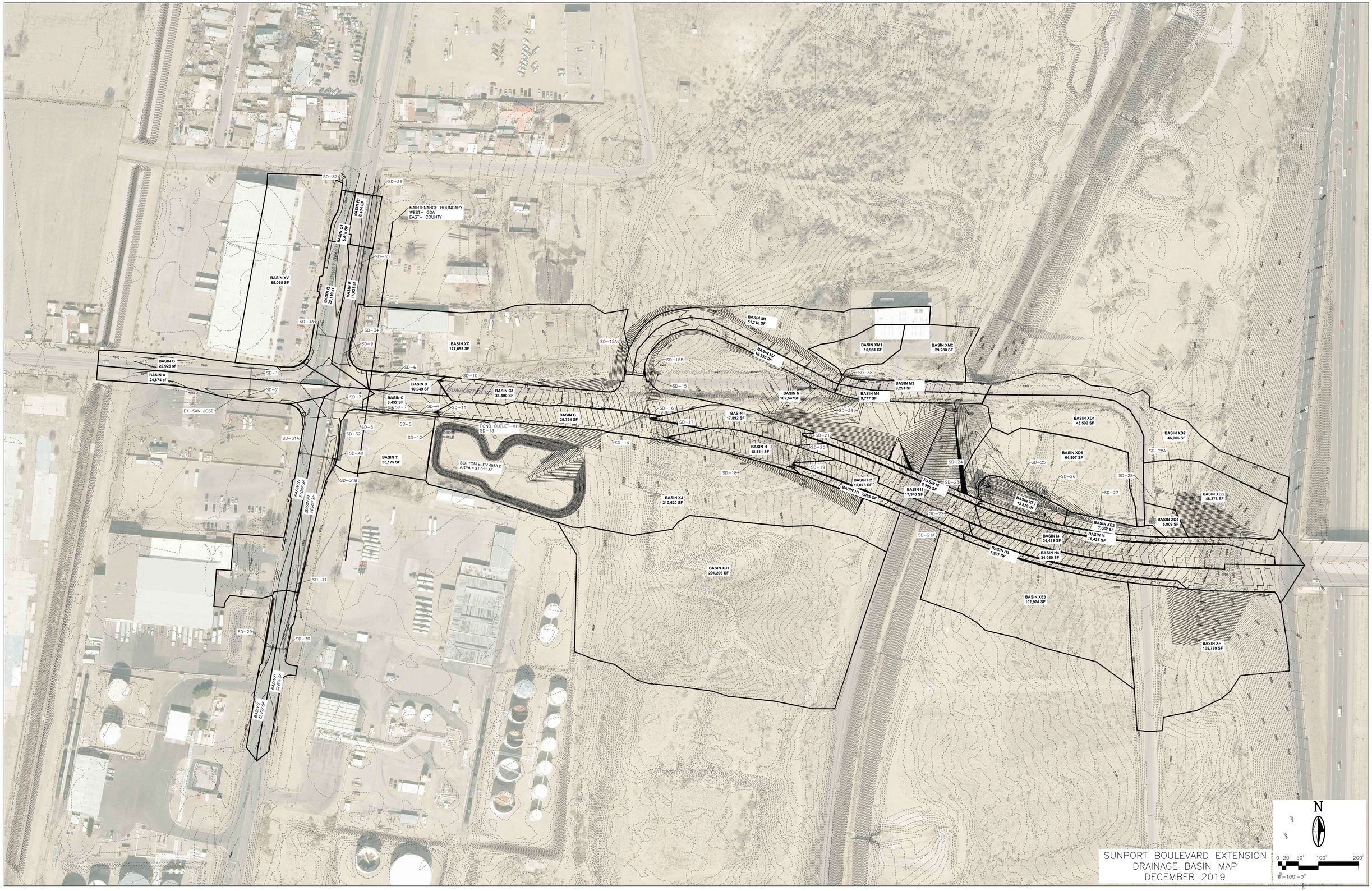

SUNPORT BOULEVARD EXTENSION
DRAINAGE BASIN MAP
DECEMBER 2019

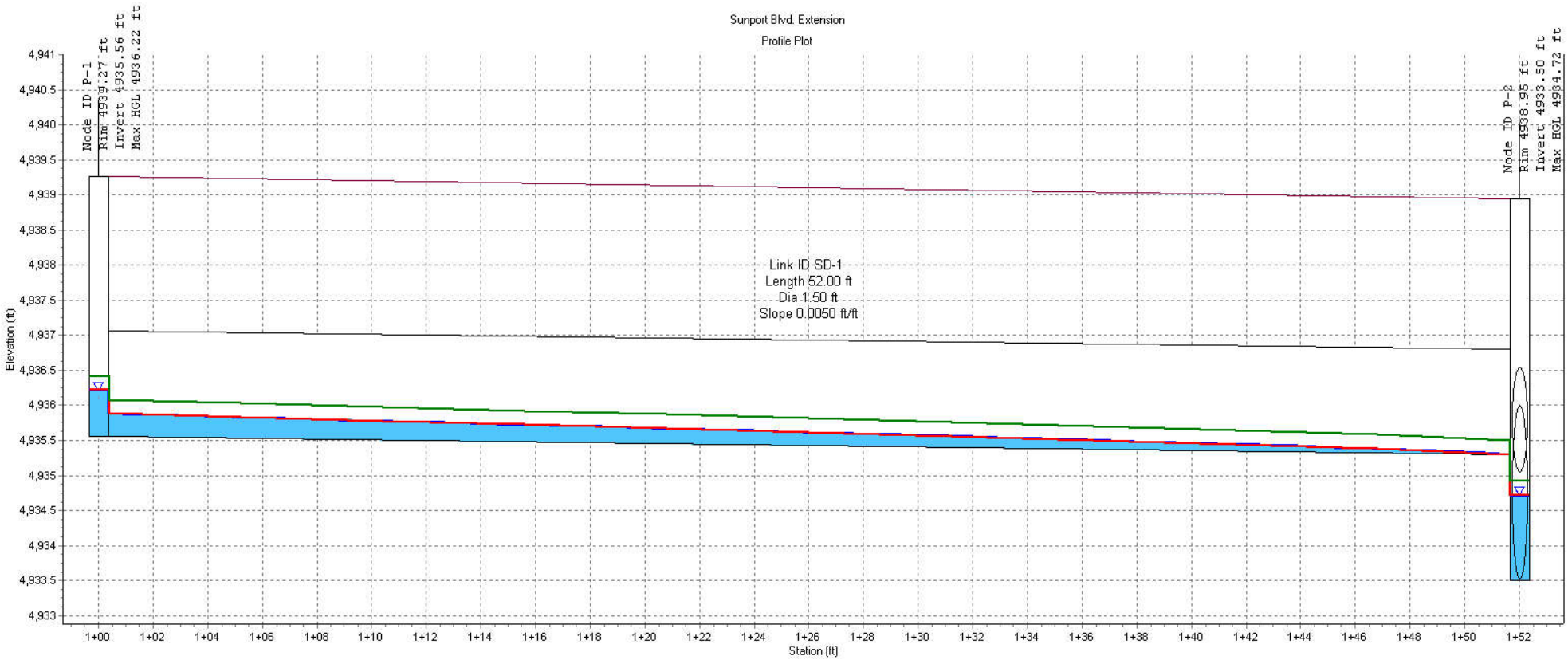

Autodesk Storm and Sanitary Analysis

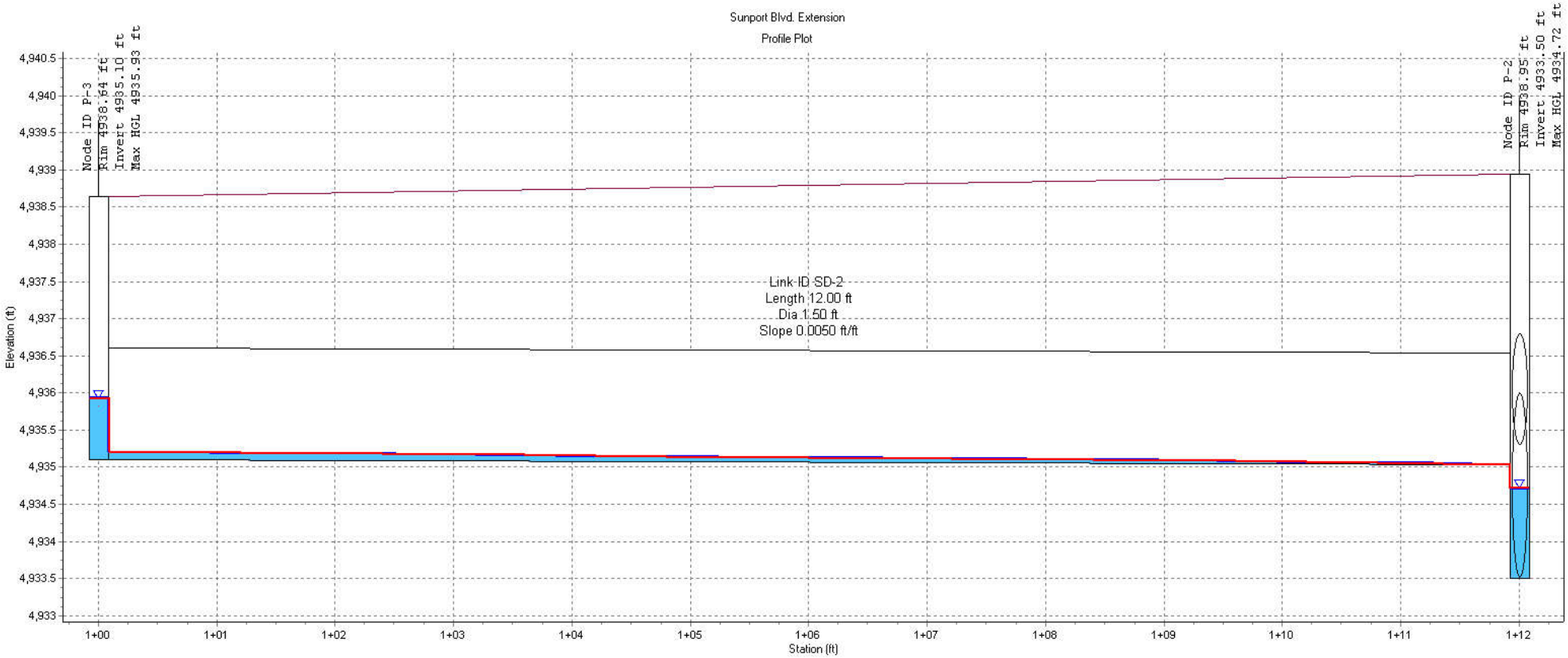

Autodesk Storm and Sanitary Analysis

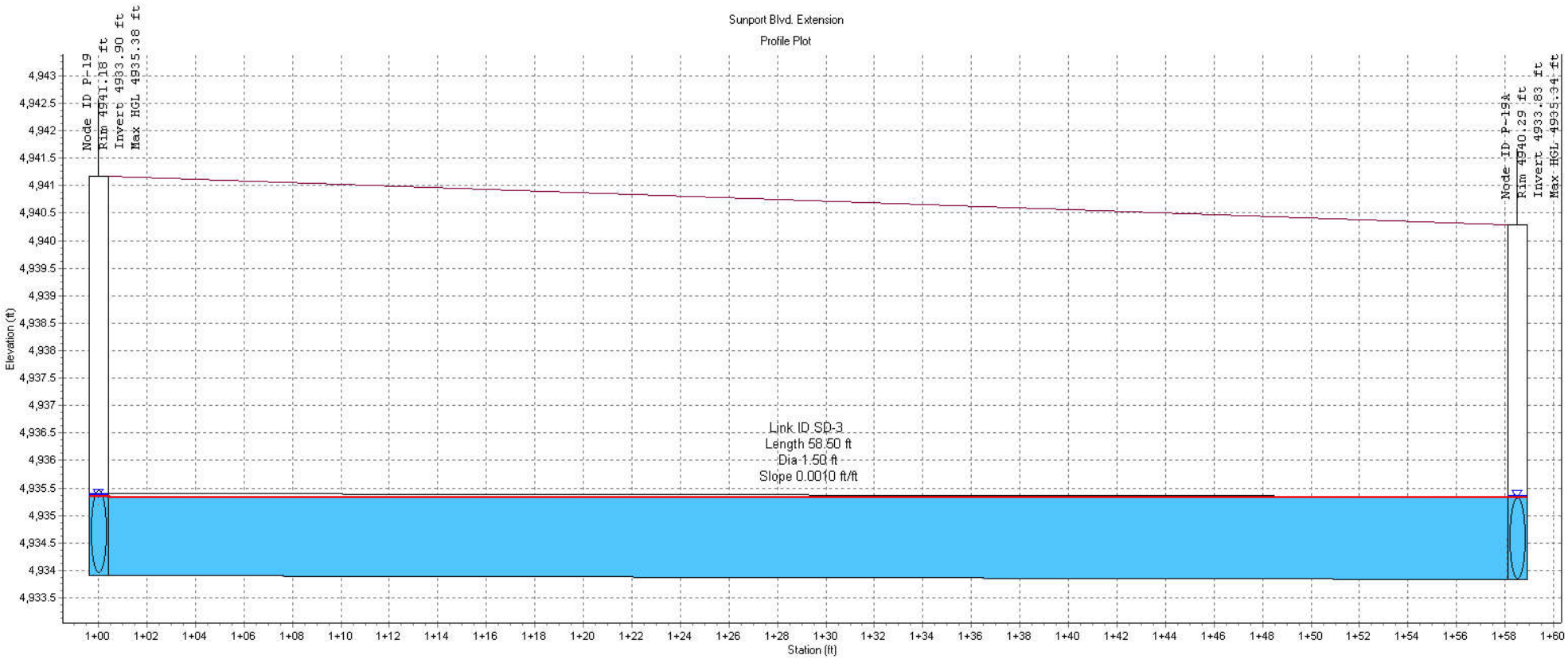

Autodesk Storm and Sanitary Analysis

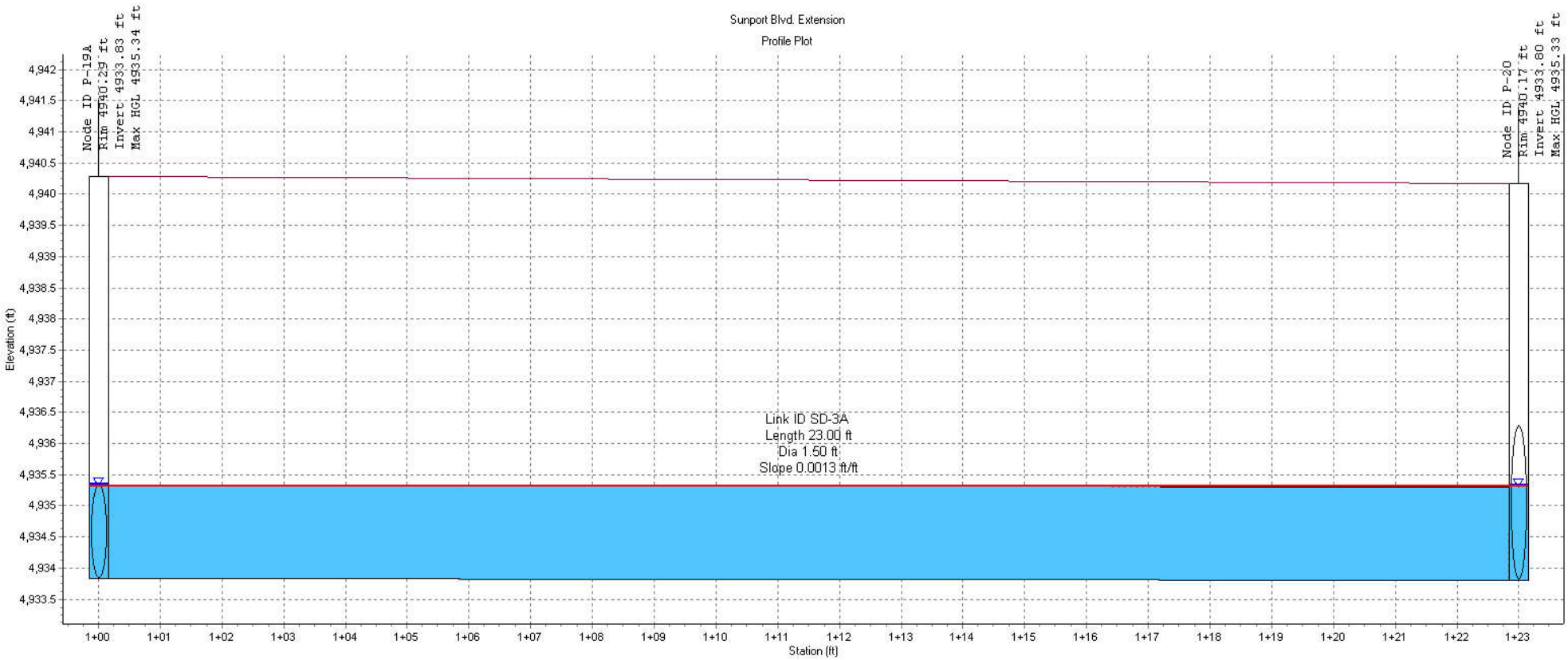

Autodesk Storm and Sanitary Analysis

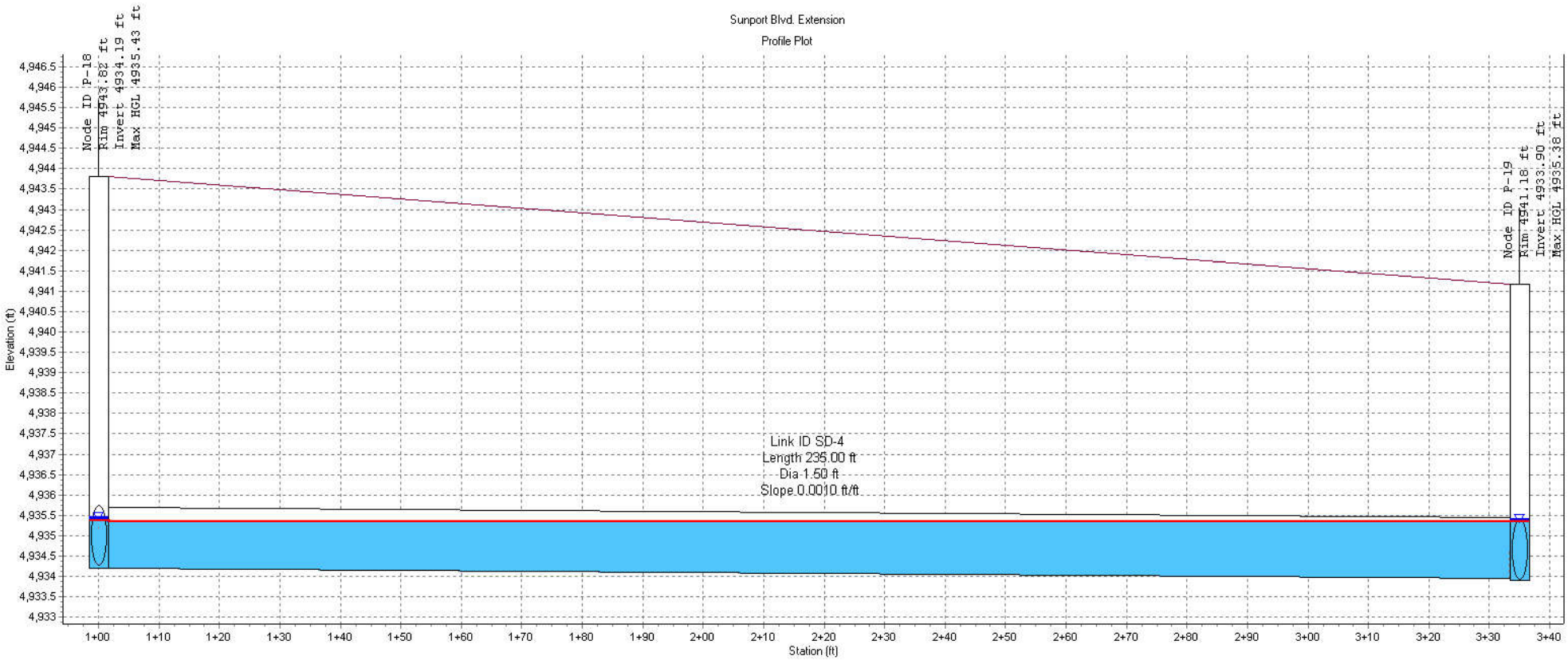

Autodesk Storm and Sanitary Analysis

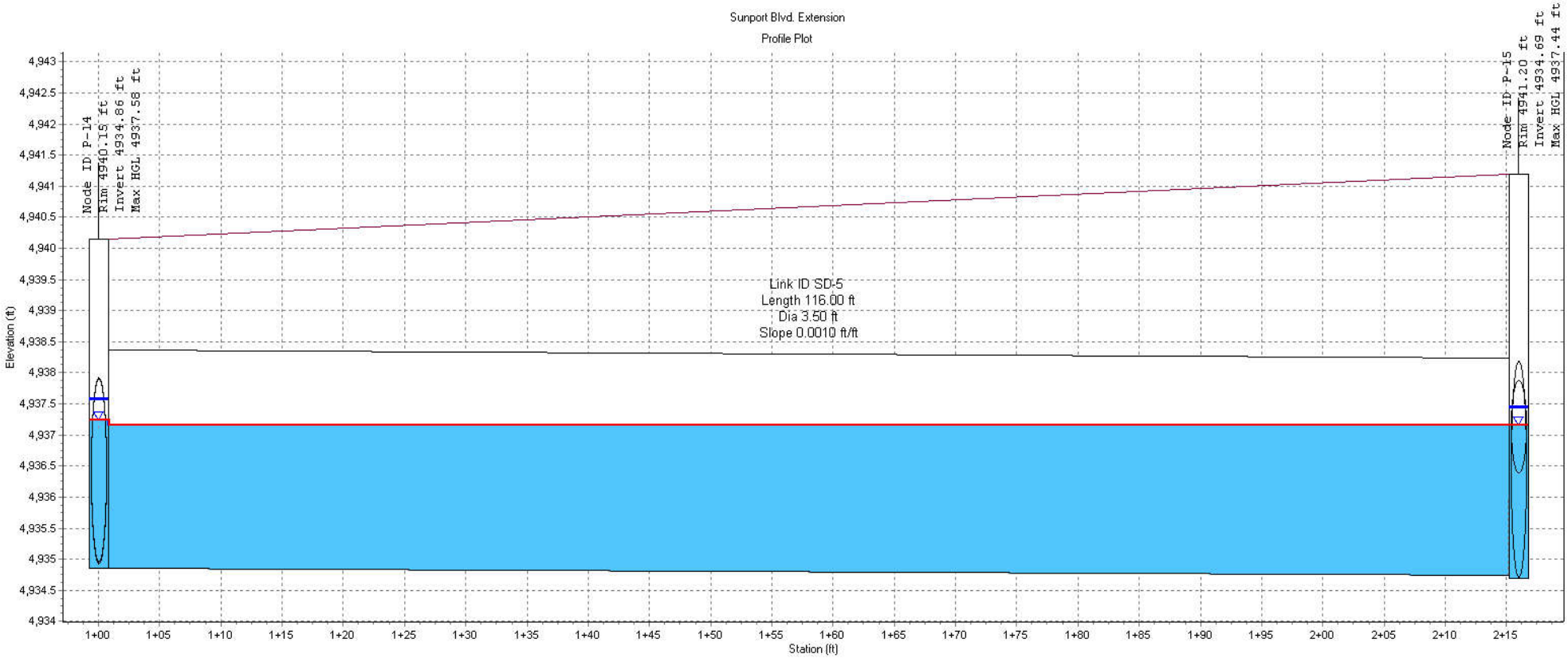

Autodesk Storm and Sanitary Analysis

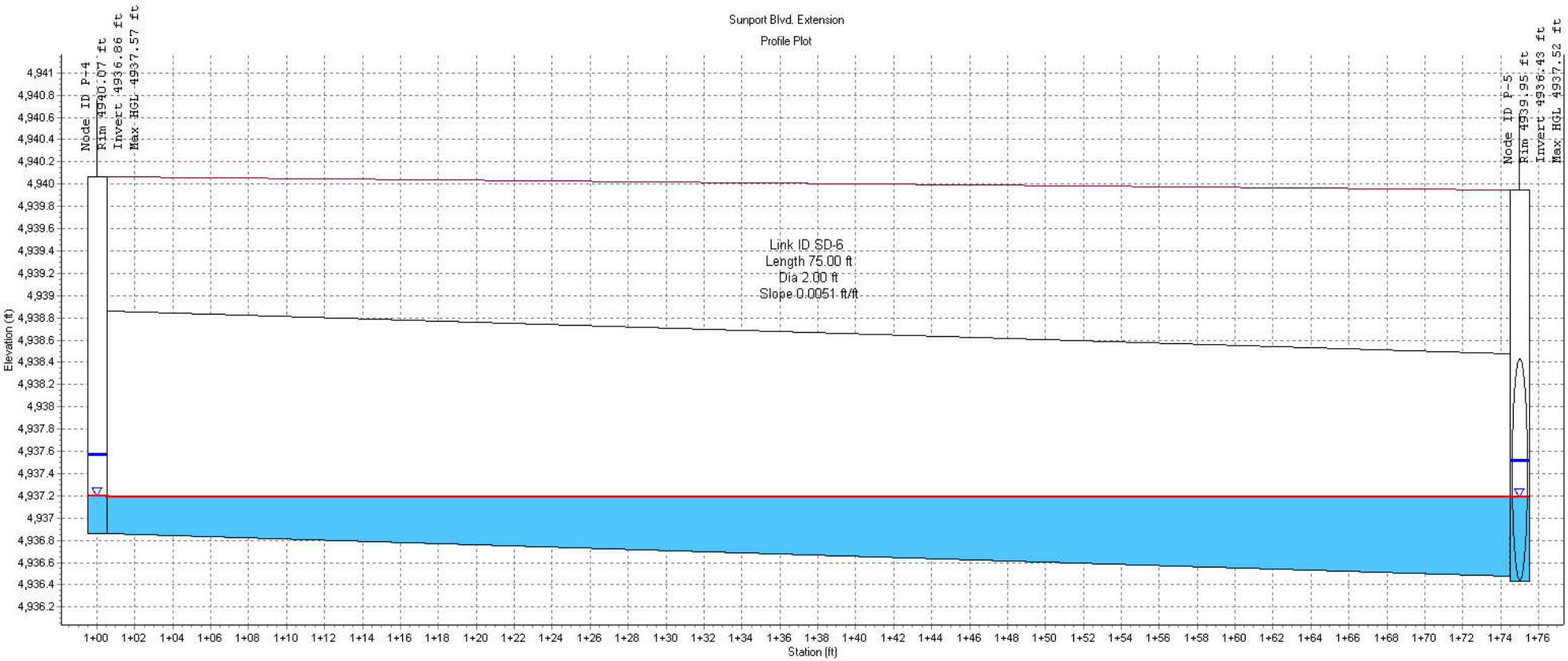

Autodesk Storm and Sanitary Analysis

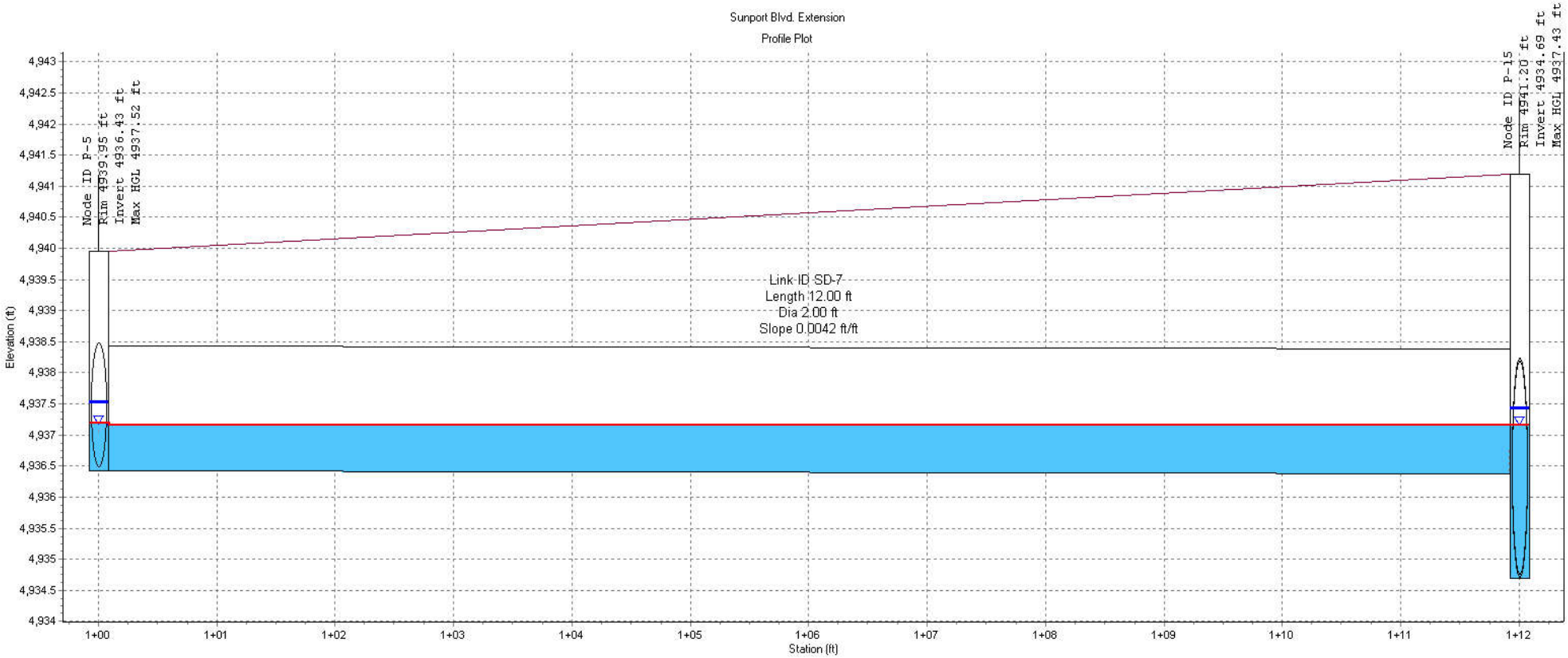

Autodesk Storm and Sanitary Analysis

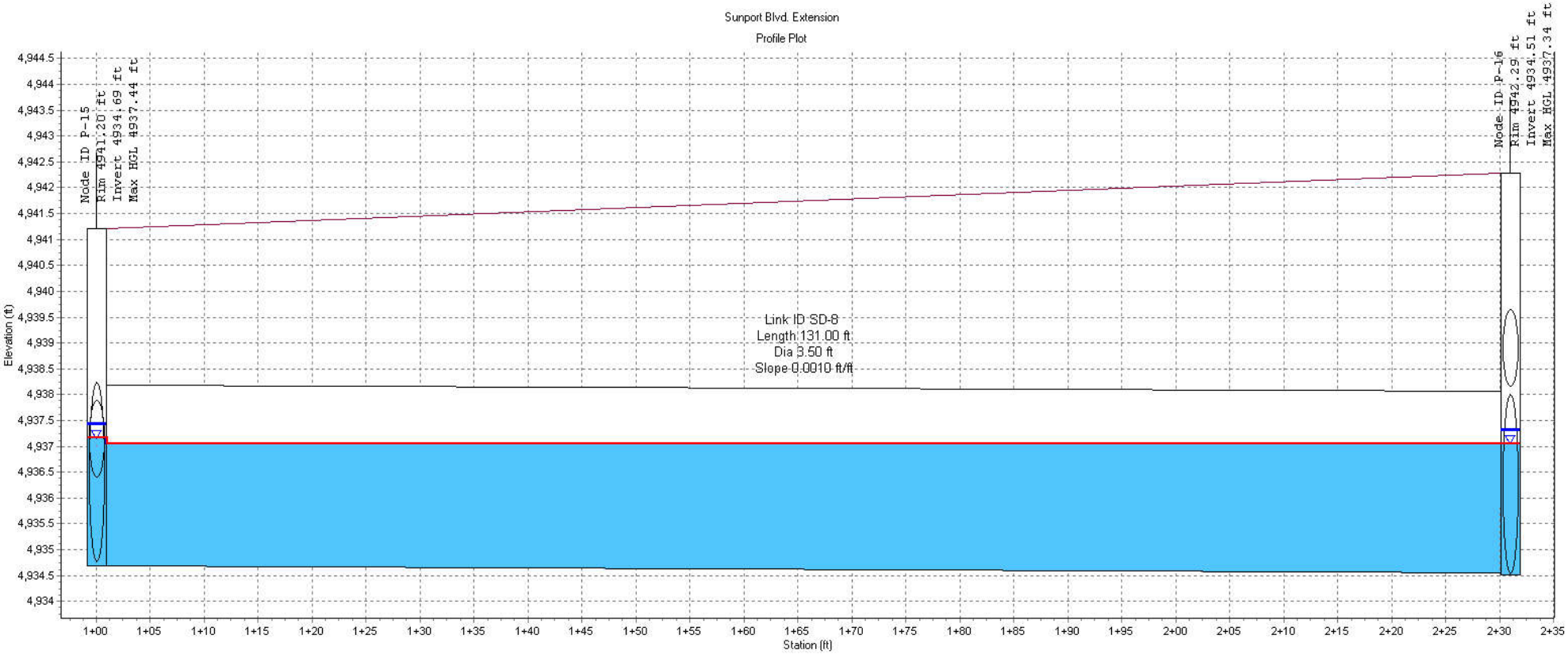

Autodesk Storm and Sanitary Analysis

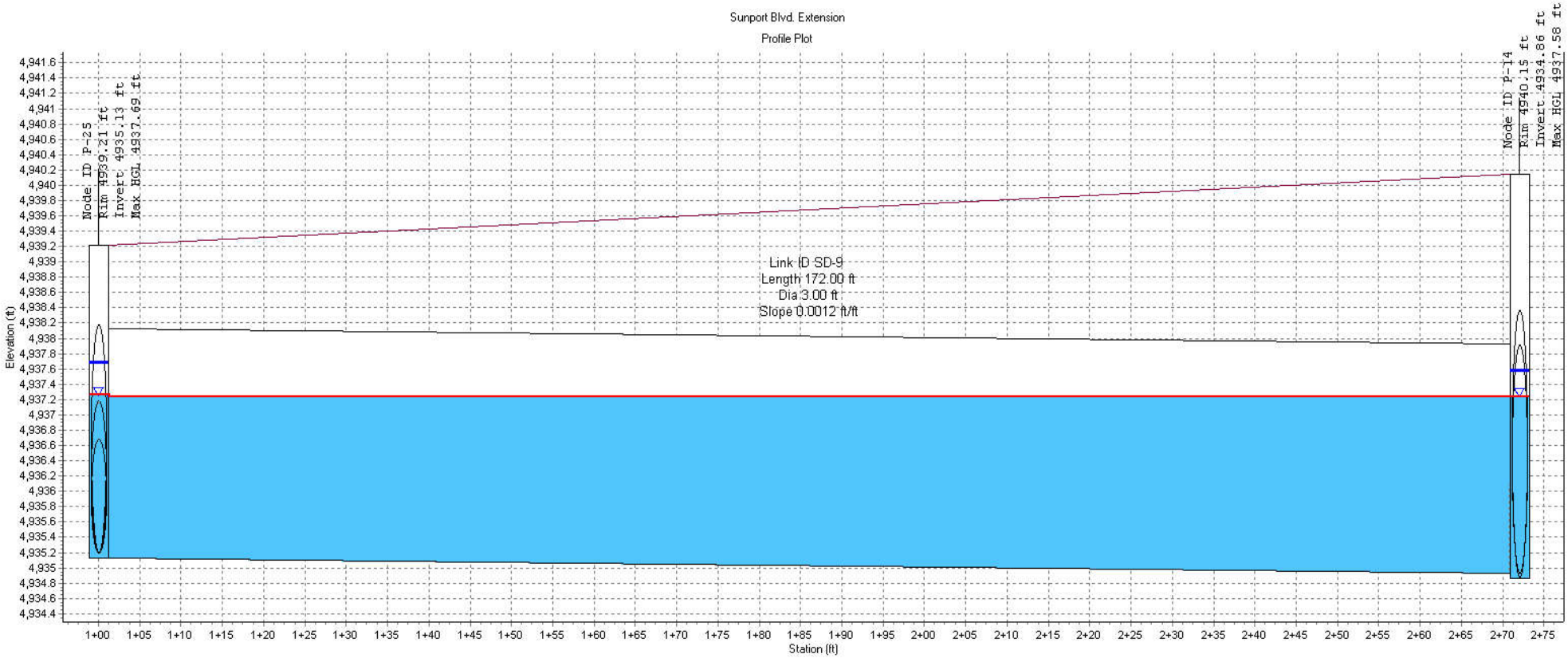
Sunport Blvd. Extension
Profile Plot
Node ID P-25
Rim 4939.21 ft
Invert 4935.13 ft
Max HGL 4937.69 ft
Link ID SD-9
Length 172.00 ft
Dia 3.00 ft
Slope 0.0012 ft/ft
Node ID P-14
Rim 4940.15 ft
Invert 4934.86 ft
Max HGL 4937.58 ft
Elevation (ft)
Station (ft)

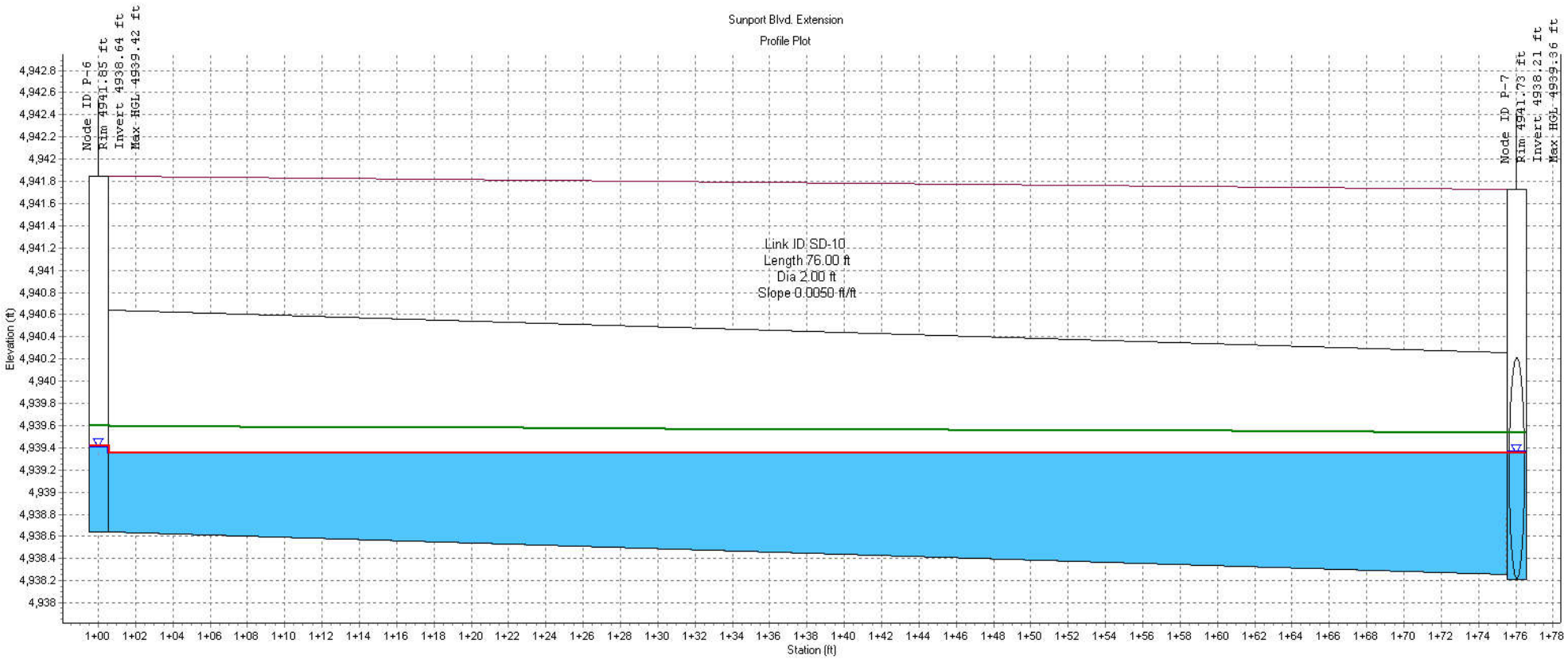

Autodesk Storm and Sanitary Analysis

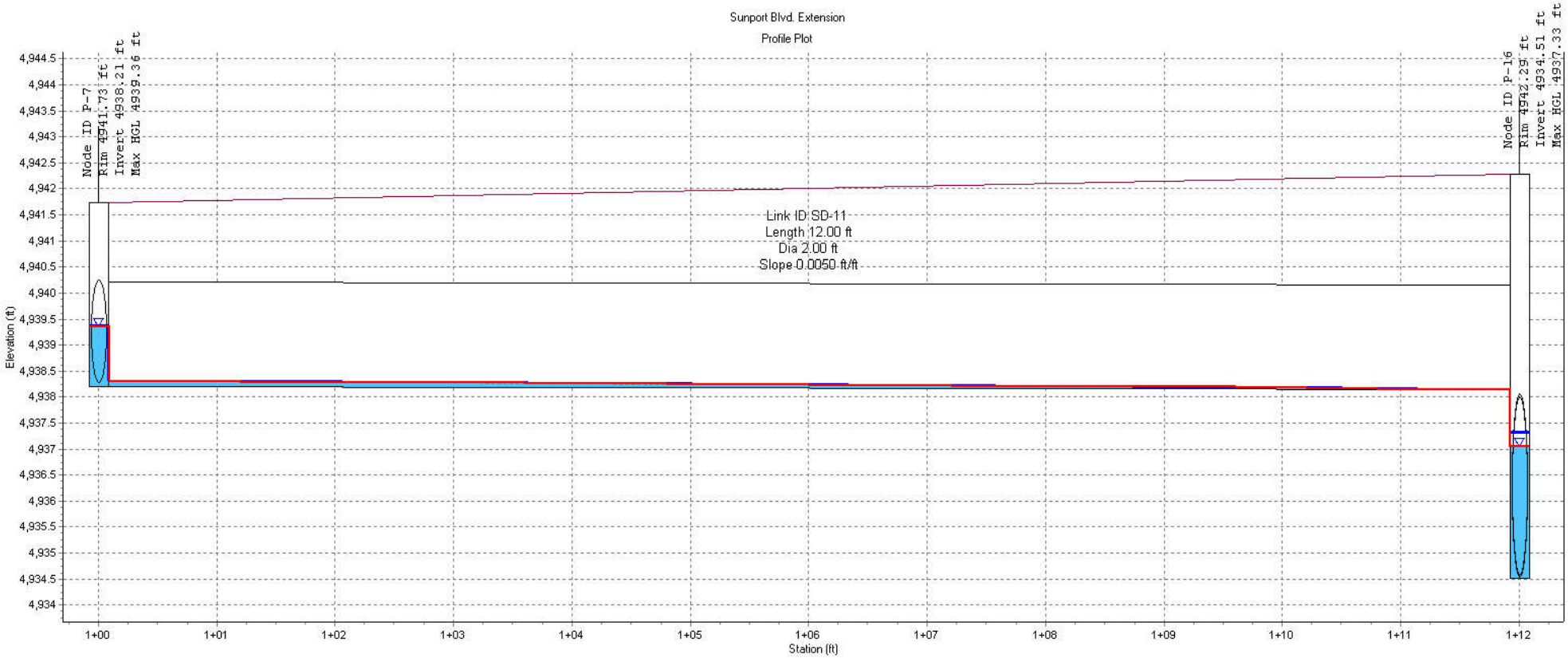

Autodesk Storm and Sanitary Analysis

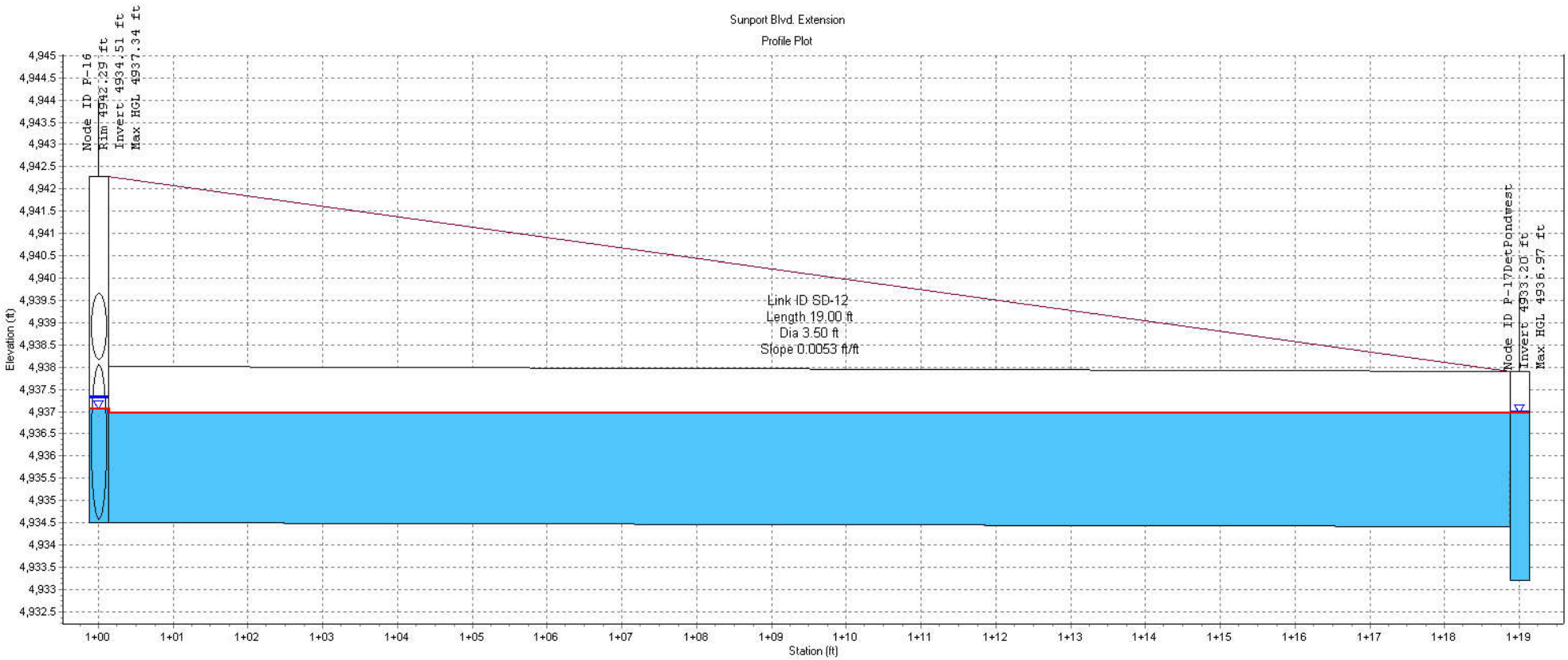

Autodesk Storm and Sanitary Analysis

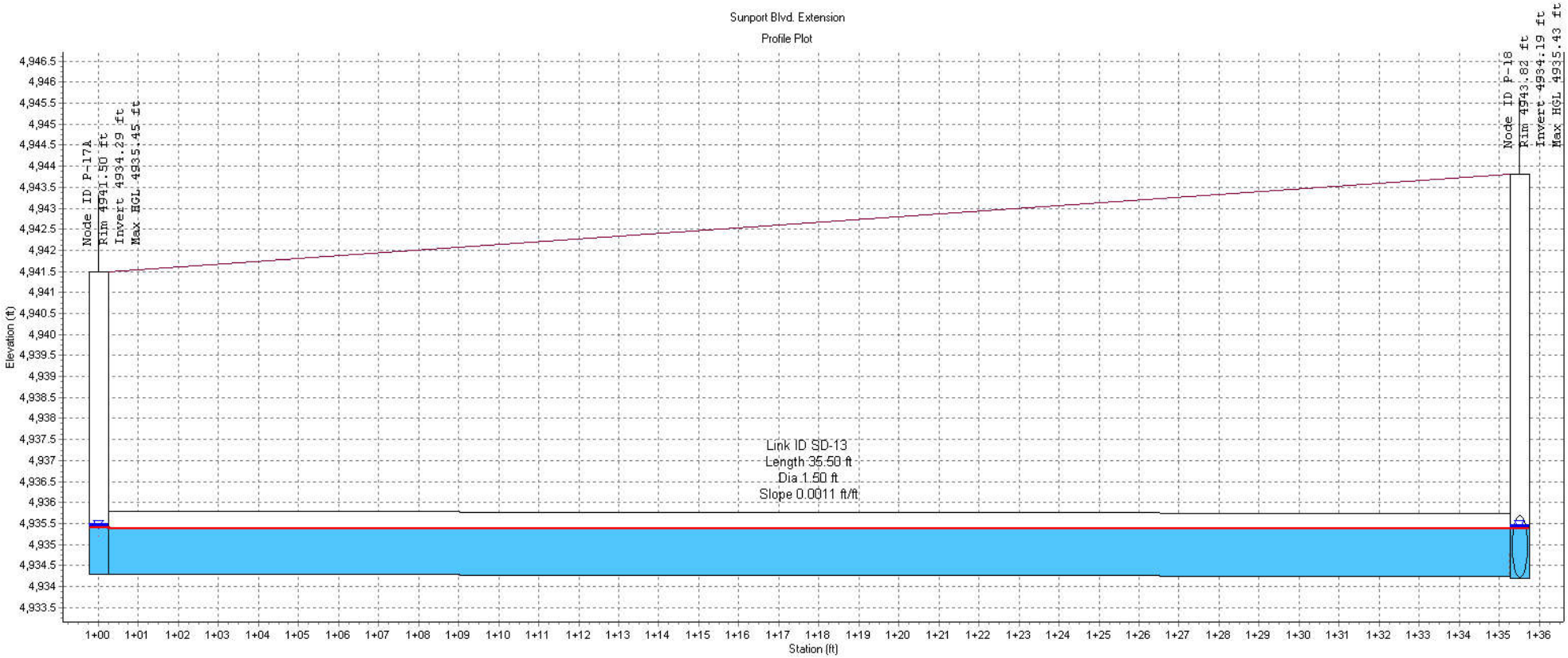

Autodesk Storm and Sanitary Analysis

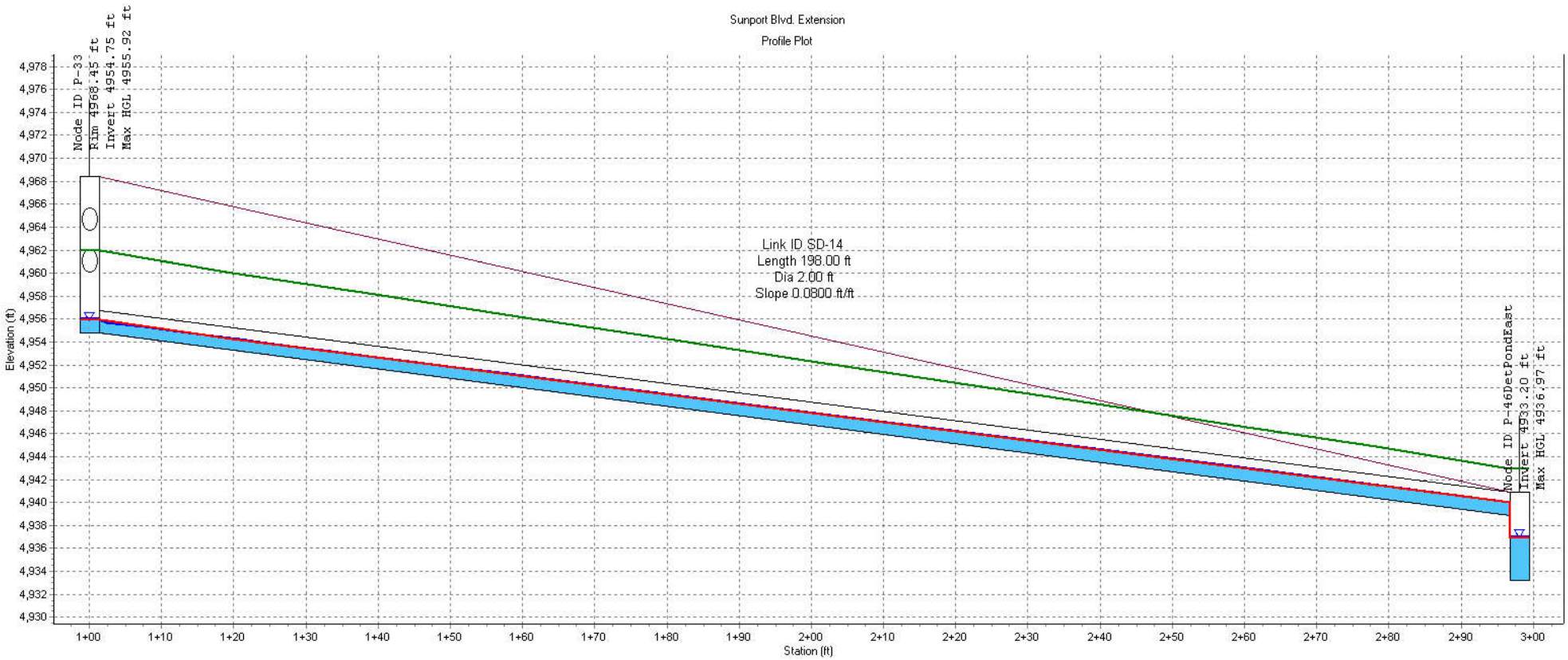

Autodesk Storm and Sanitary Analysis

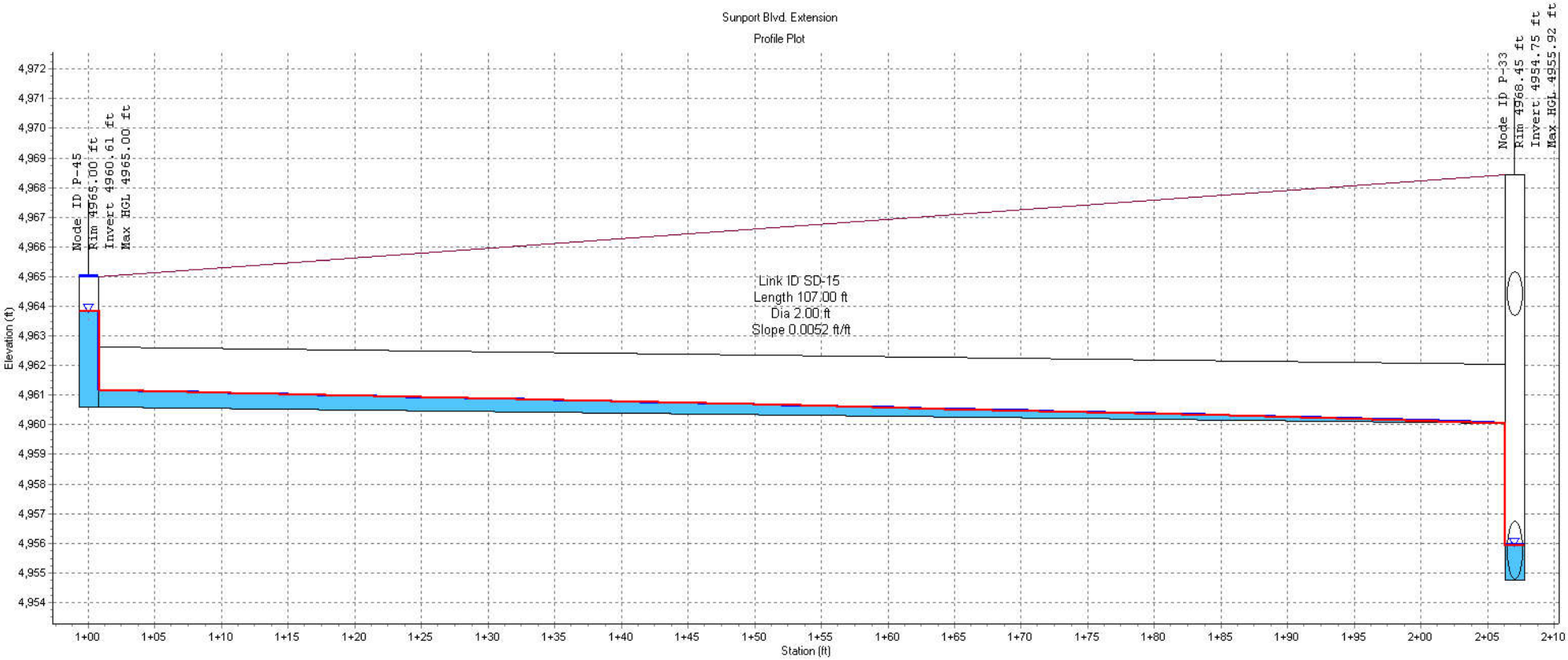

Autodesk Storm and Sanitary Analysis

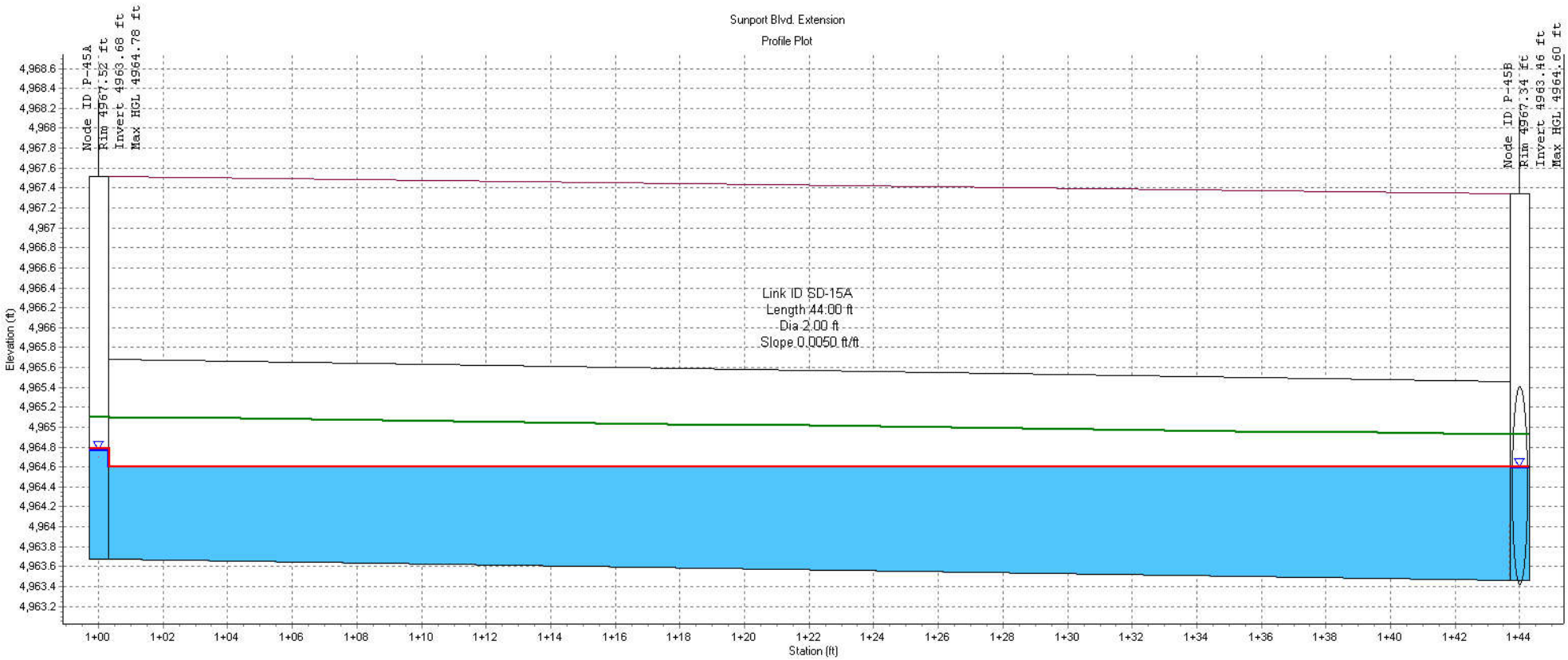

Autodesk Storm and Sanitary Analysis

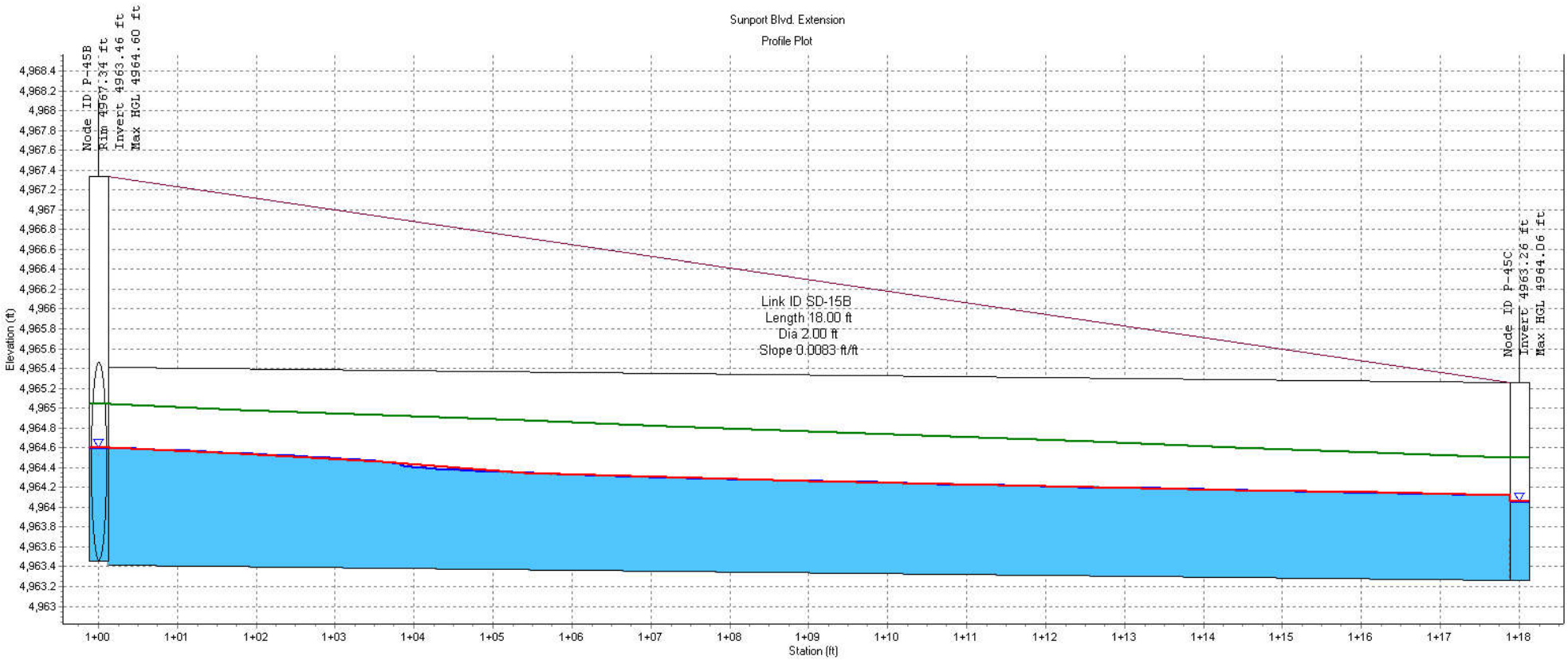

Autodesk Storm and Sanitary Analysis

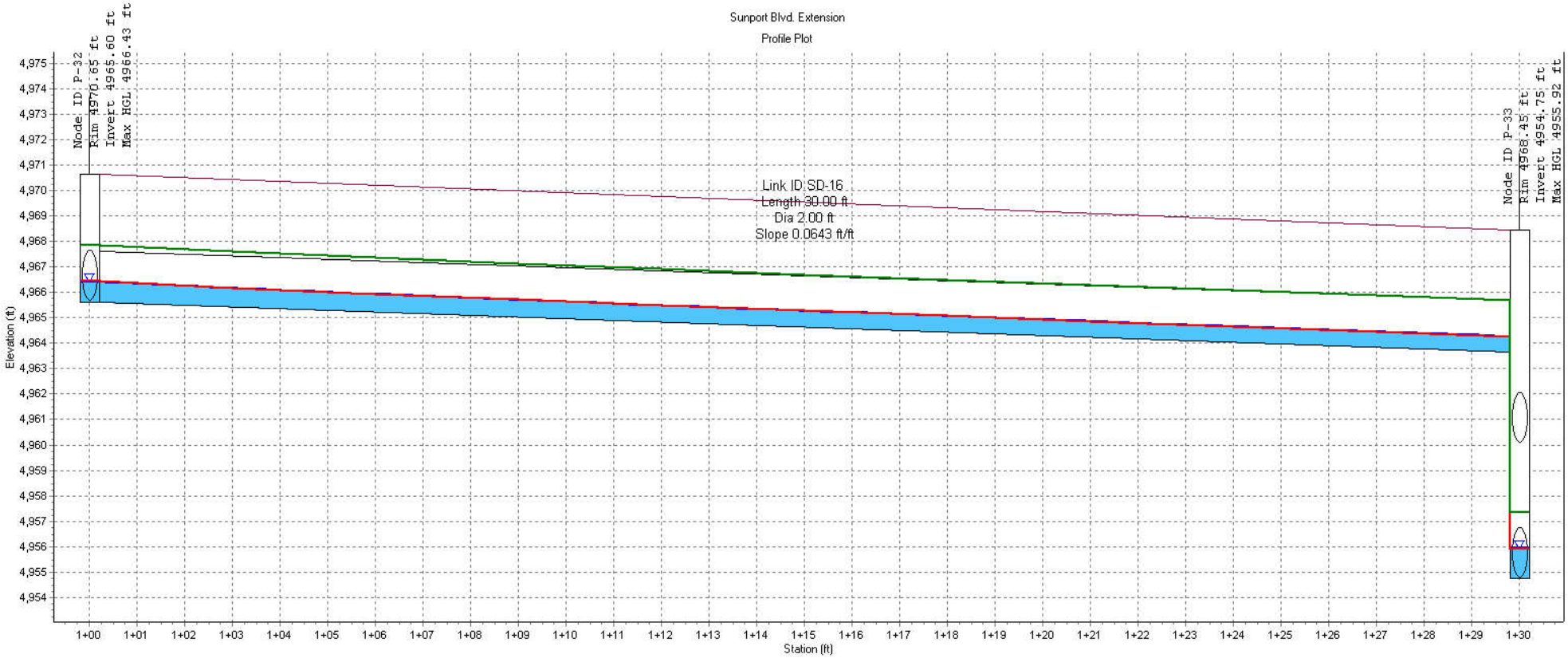

Autodesk Storm and Sanitary Analysis

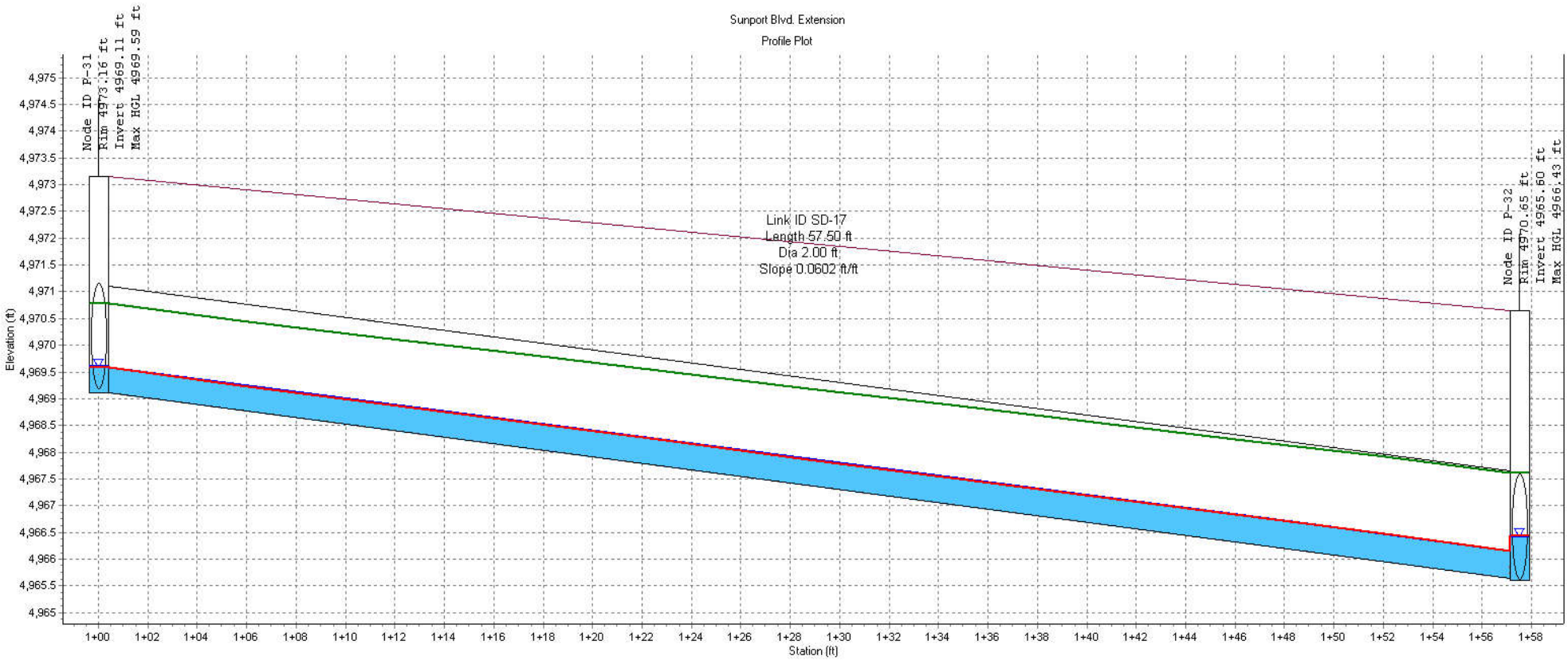

Autodesk Storm and Sanitary Analysis

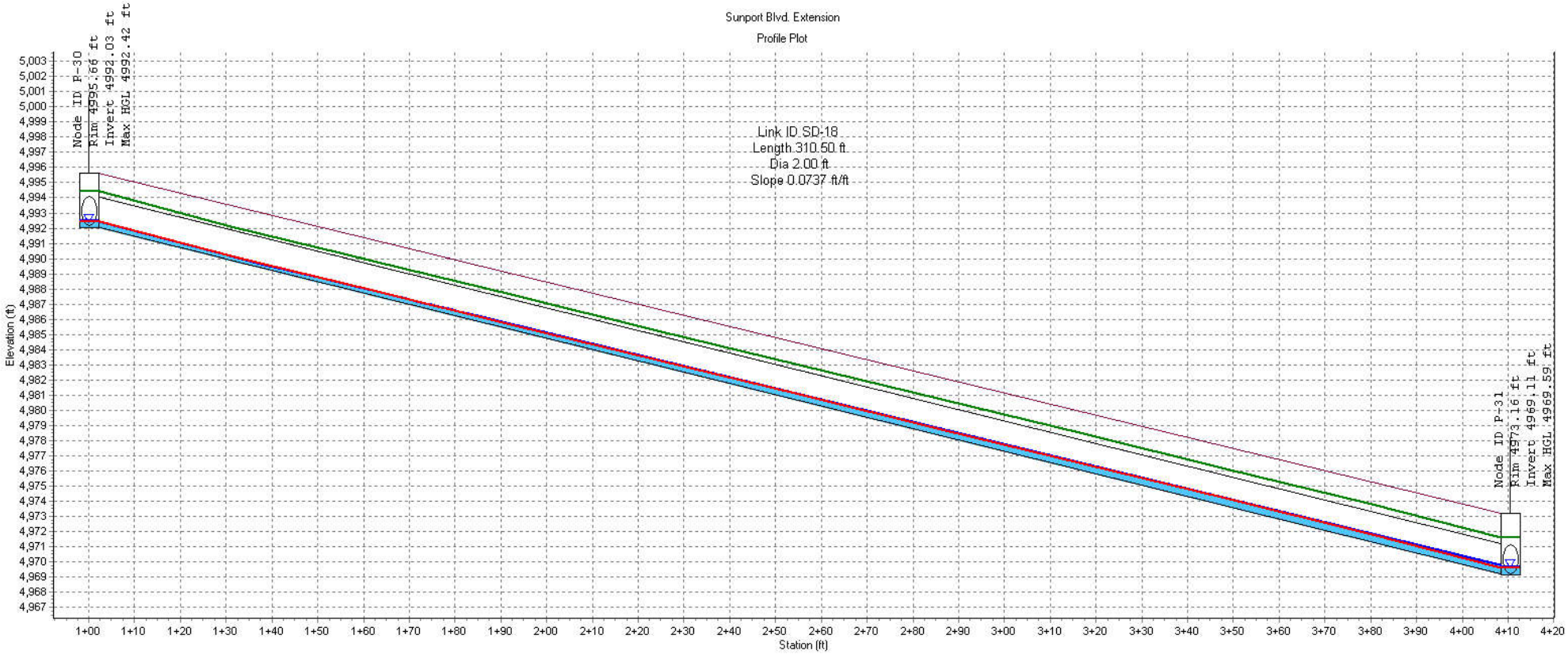
Sunport Blvd. Extension
Profile Plot
Node ID P-30
Rim 4995.66 ft
Invert 4994.03 ft
Max HGL 4992.42 ft
Link ID SD-18
Length 310.50 ft
Dia 2.00 ft
Slope 0.0737 ft/ft
Node ID P-31
Rim 4973.16 ft
Invert 4969.11 ft
Max HGL 4969.59 ft
Elevation (ft)
Station (ft)

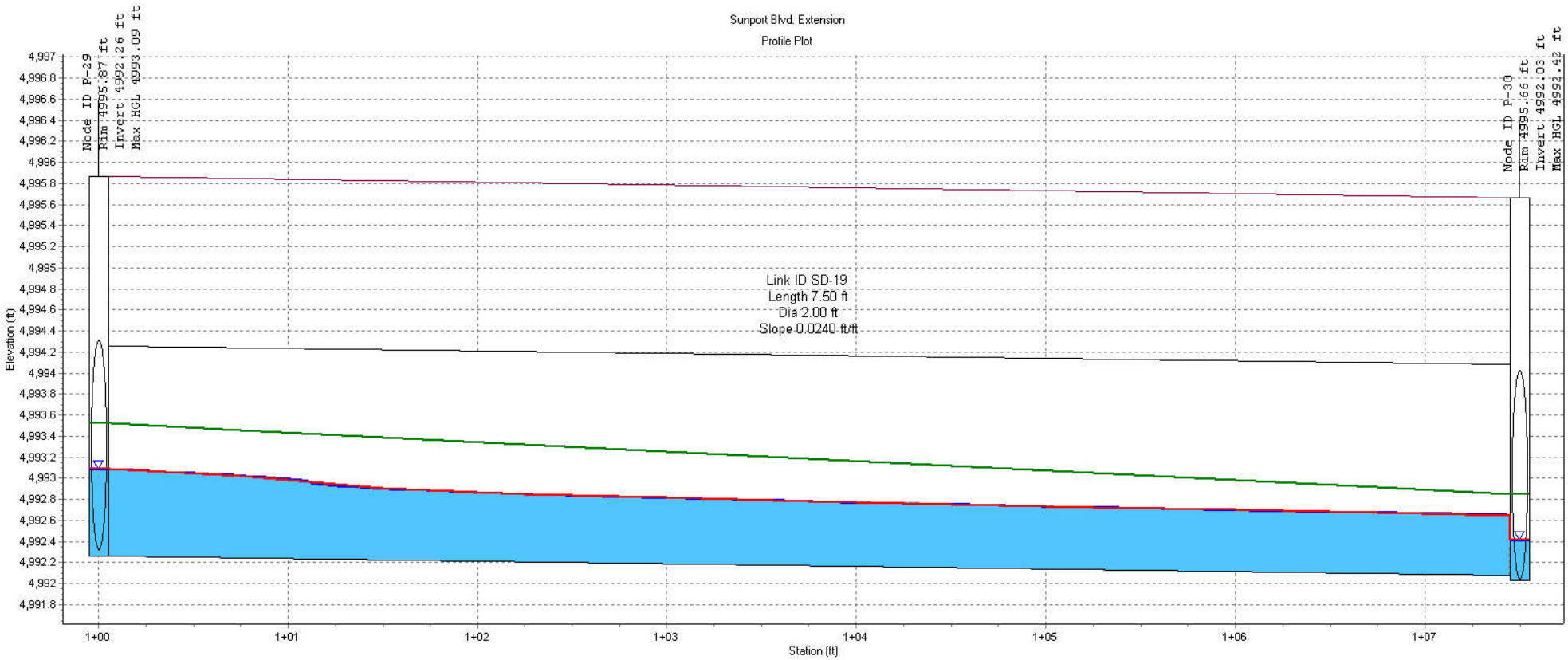

Autodesk Storm and Sanitary Analysis

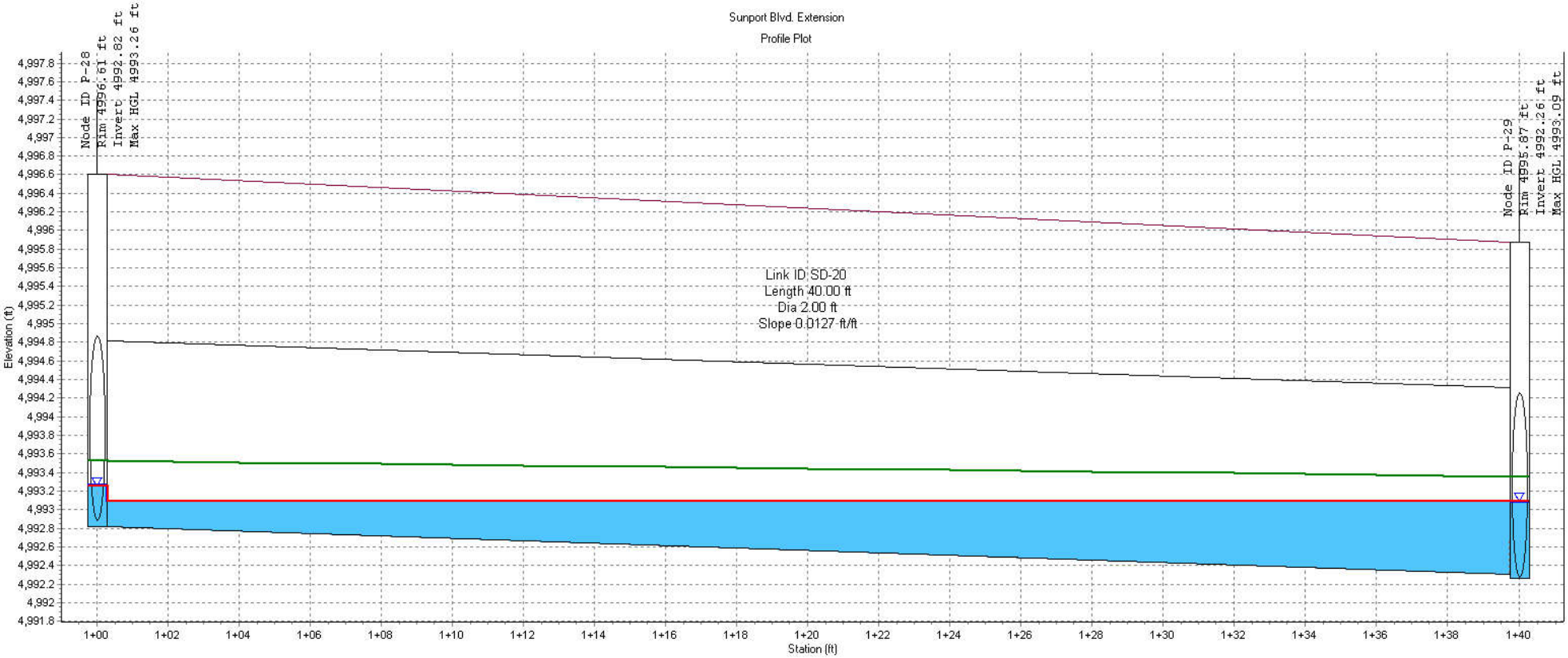

Autodesk Storm and Sanitary Analysis

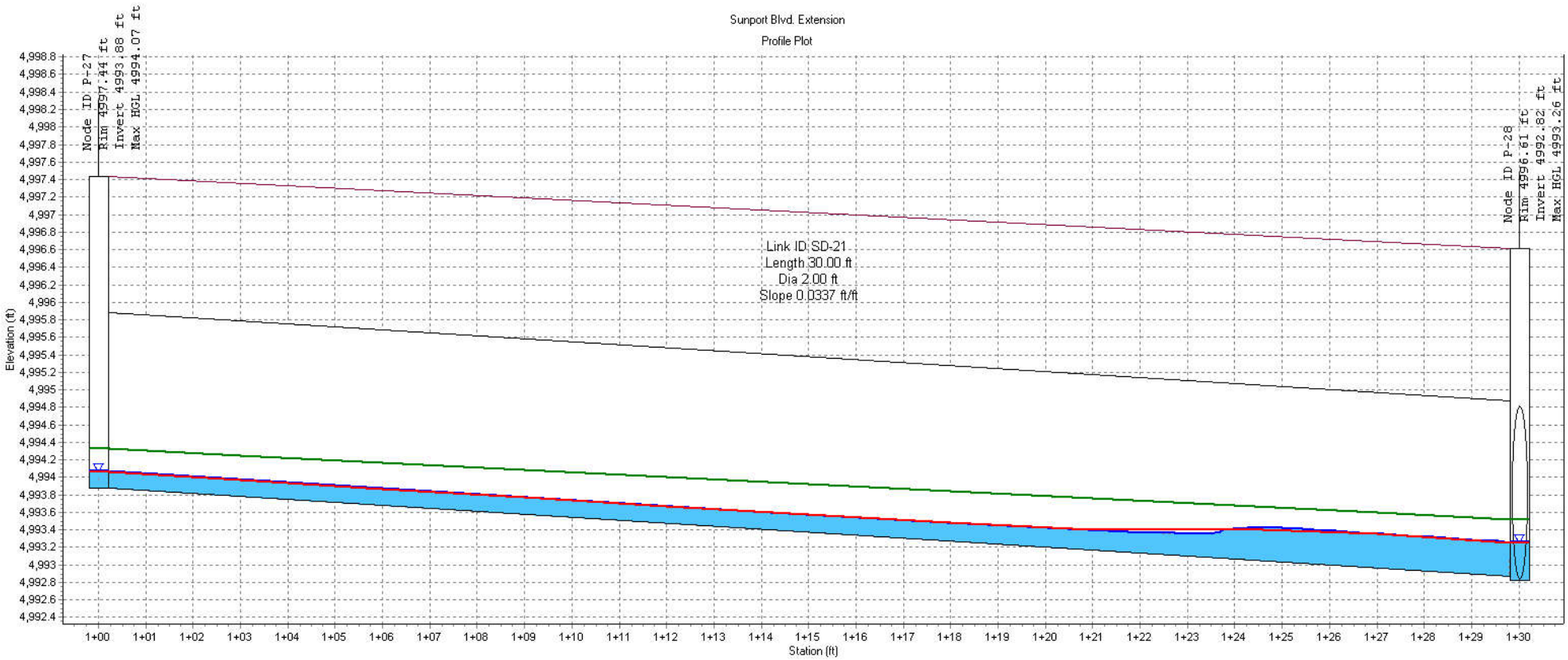

Autodesk Storm and Sanitary Analysis

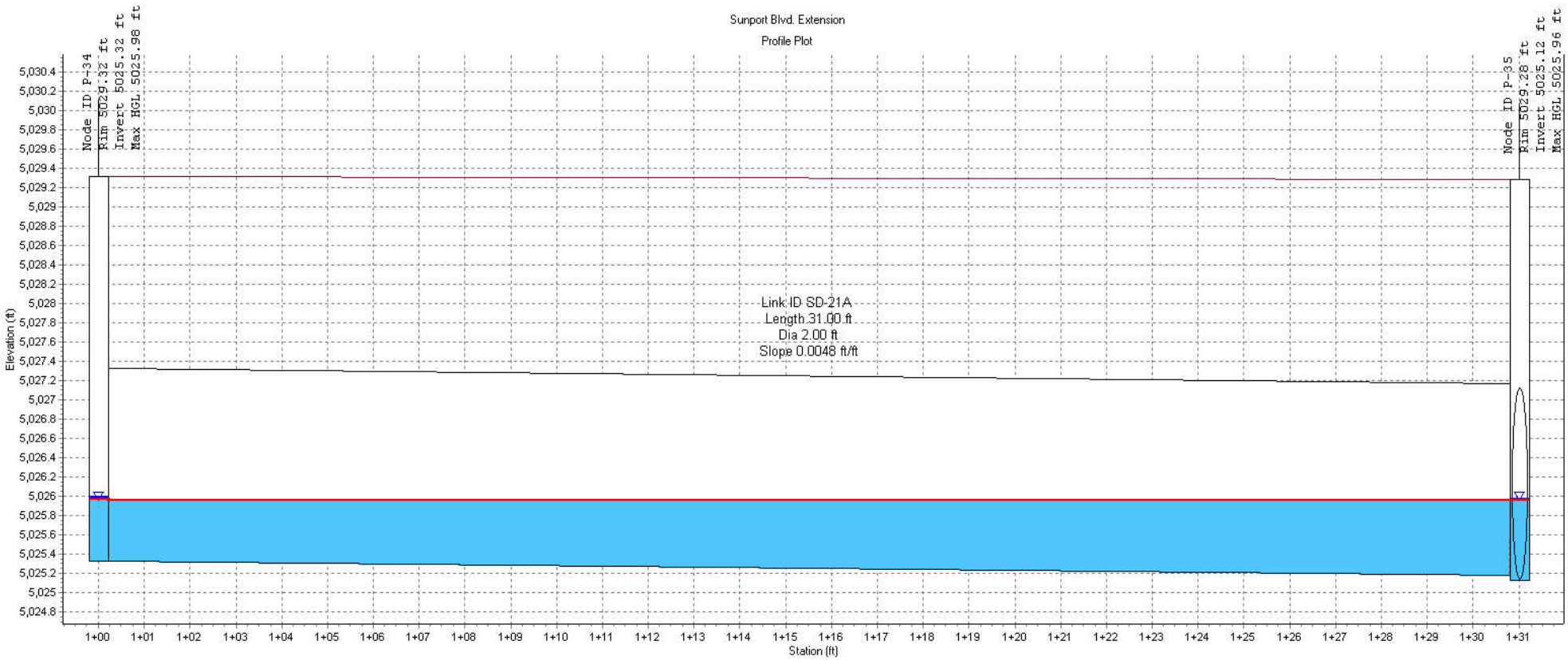

Autodesk Storm and Sanitary Analysis

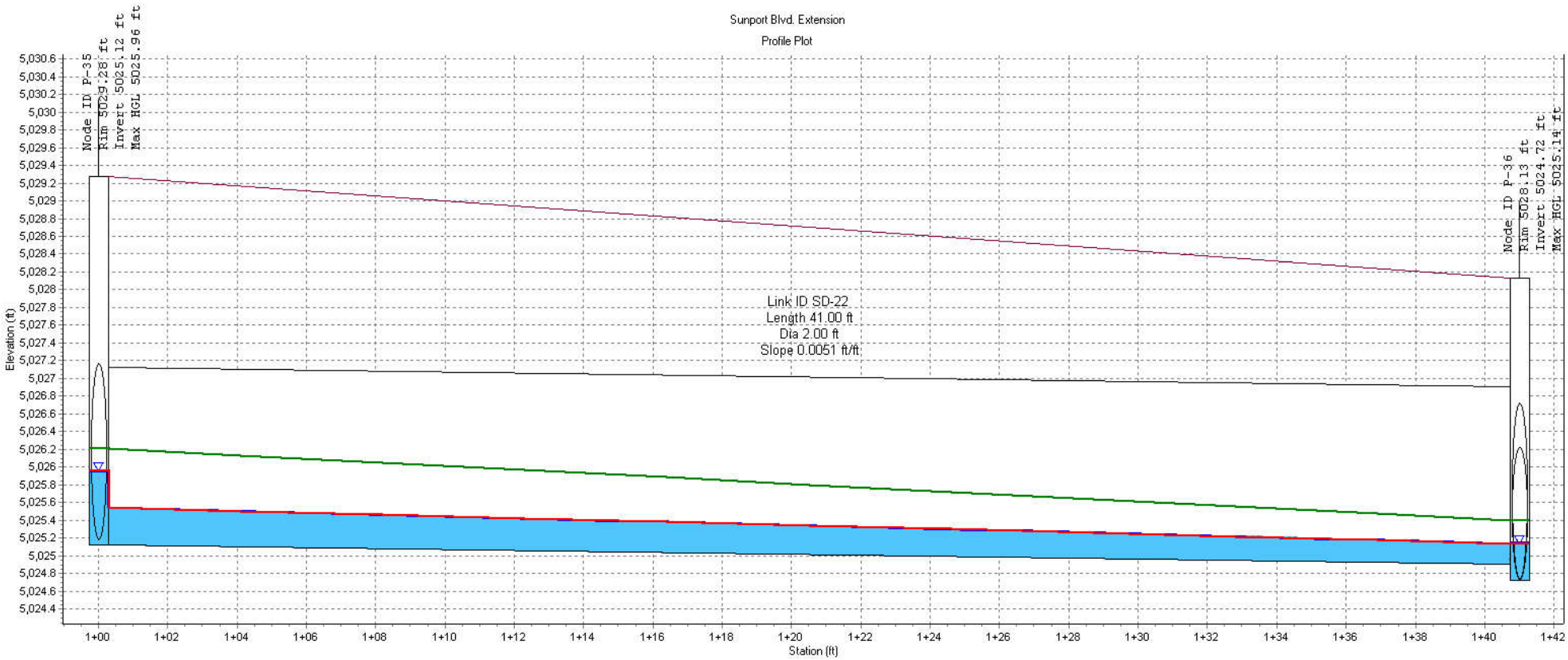

Autodesk Storm and Sanitary Analysis

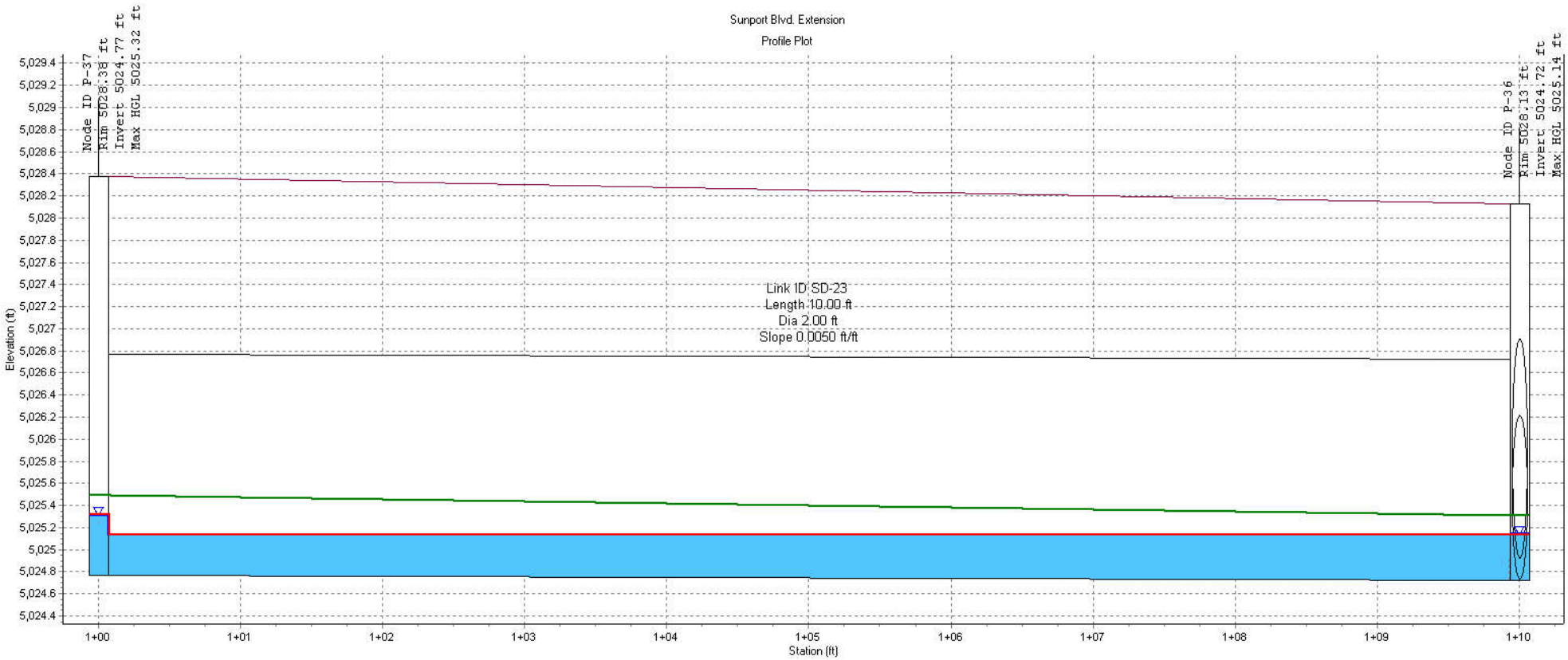

Autodesk Storm and Sanitary Analysis

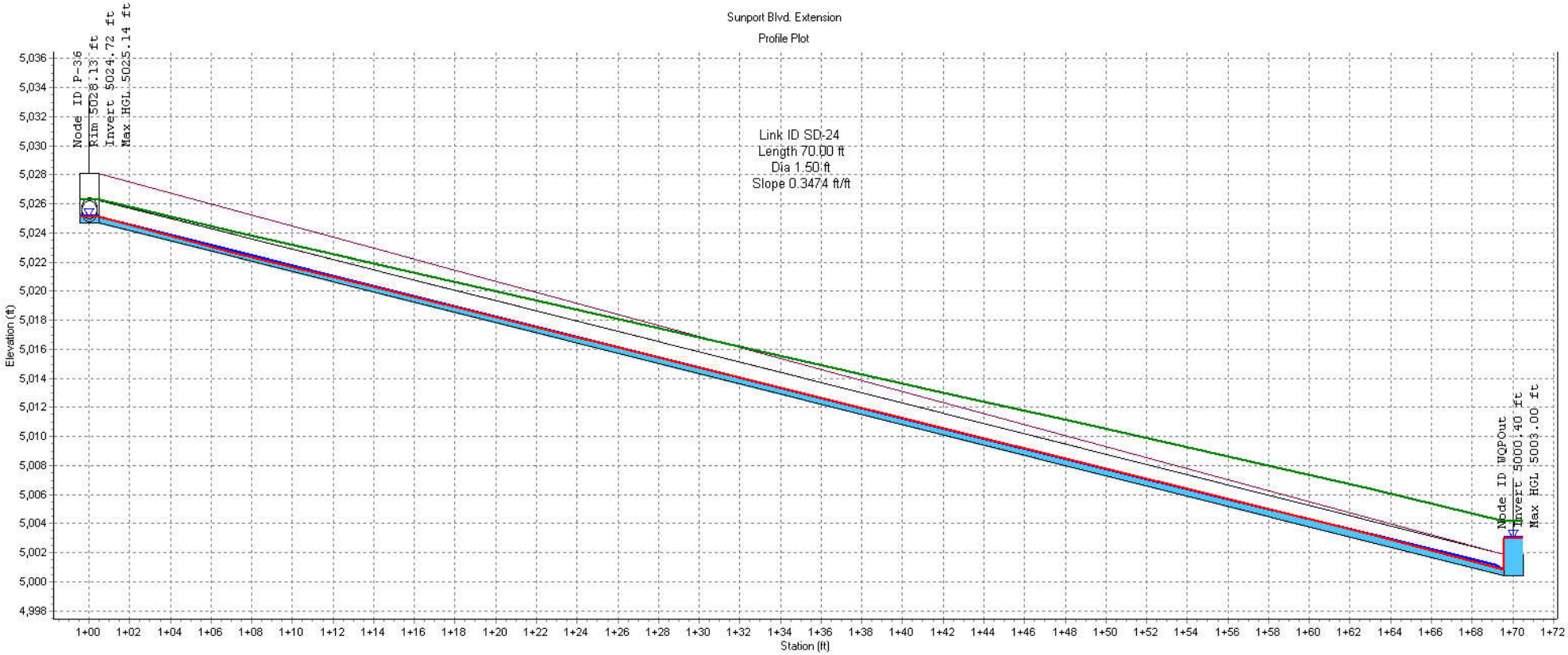

Autodesk Storm and Sanitary Analysis

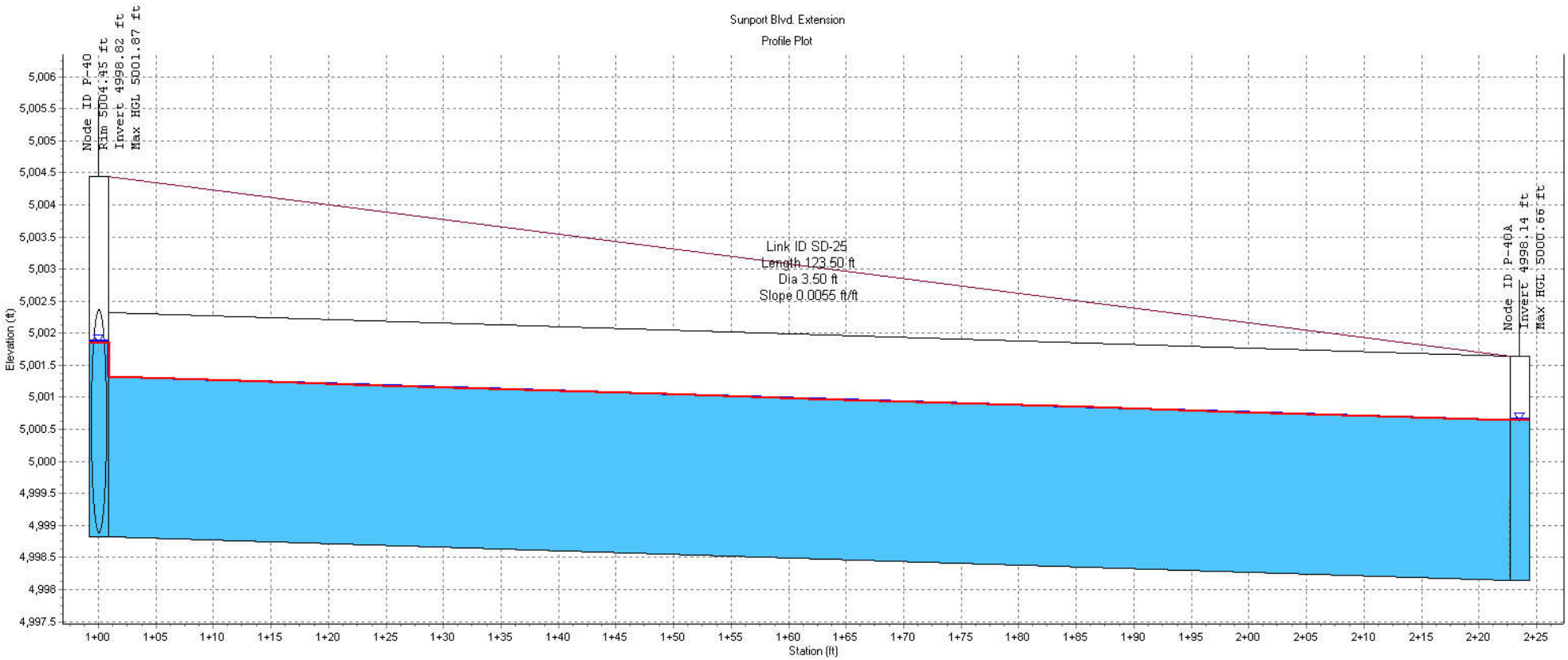
Sunport Blvd. Extension
Profile Plot
Node ID P-40
Rim 5004.45 ft
Invert 4998.82 ft
Max HGL 5001.87 ft
Link ID SD-25
Length 123.50 ft
Dia 3.50 ft
Slope 0.0055 ft/ft
Node ID P-40A
Invert 4998.14 ft
Max HGL 5000.66 ft
Elevation (ft)
Station (ft)

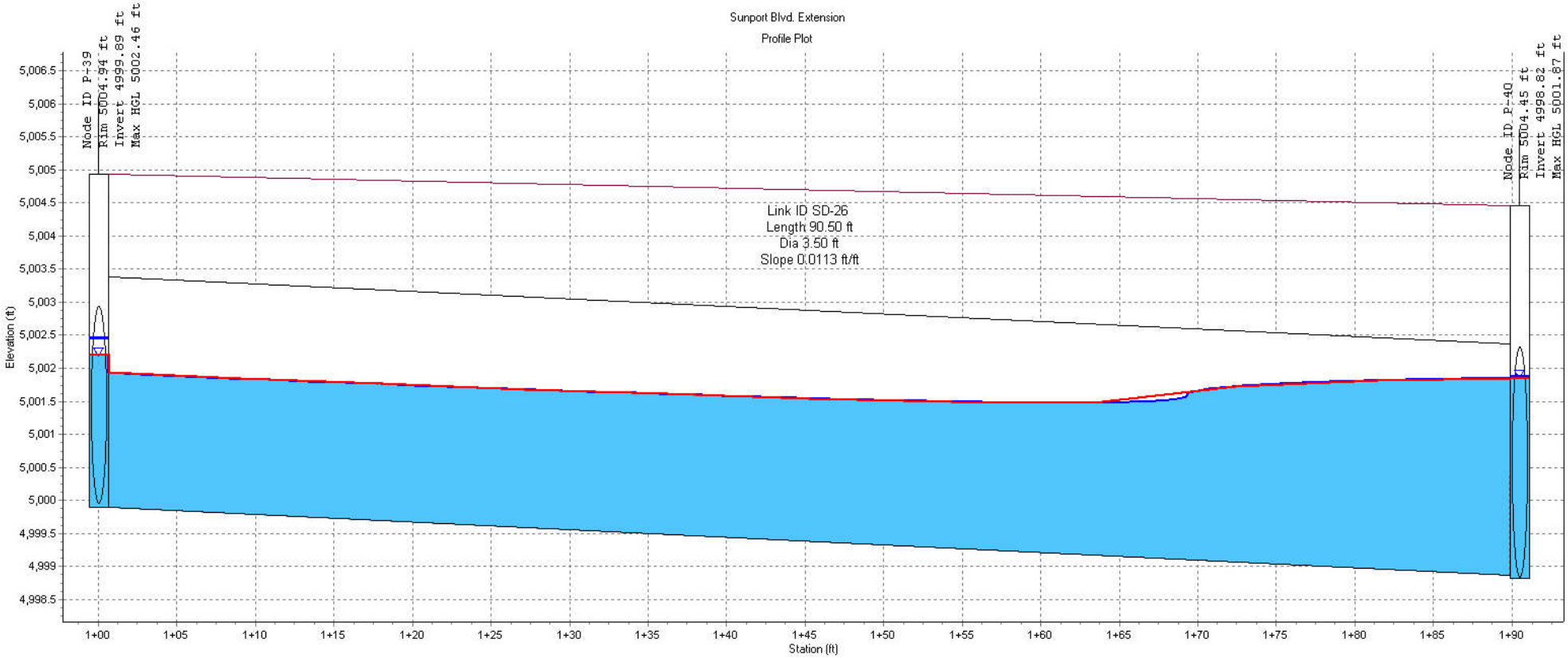

Autodesk Storm and Sanitary Analysis

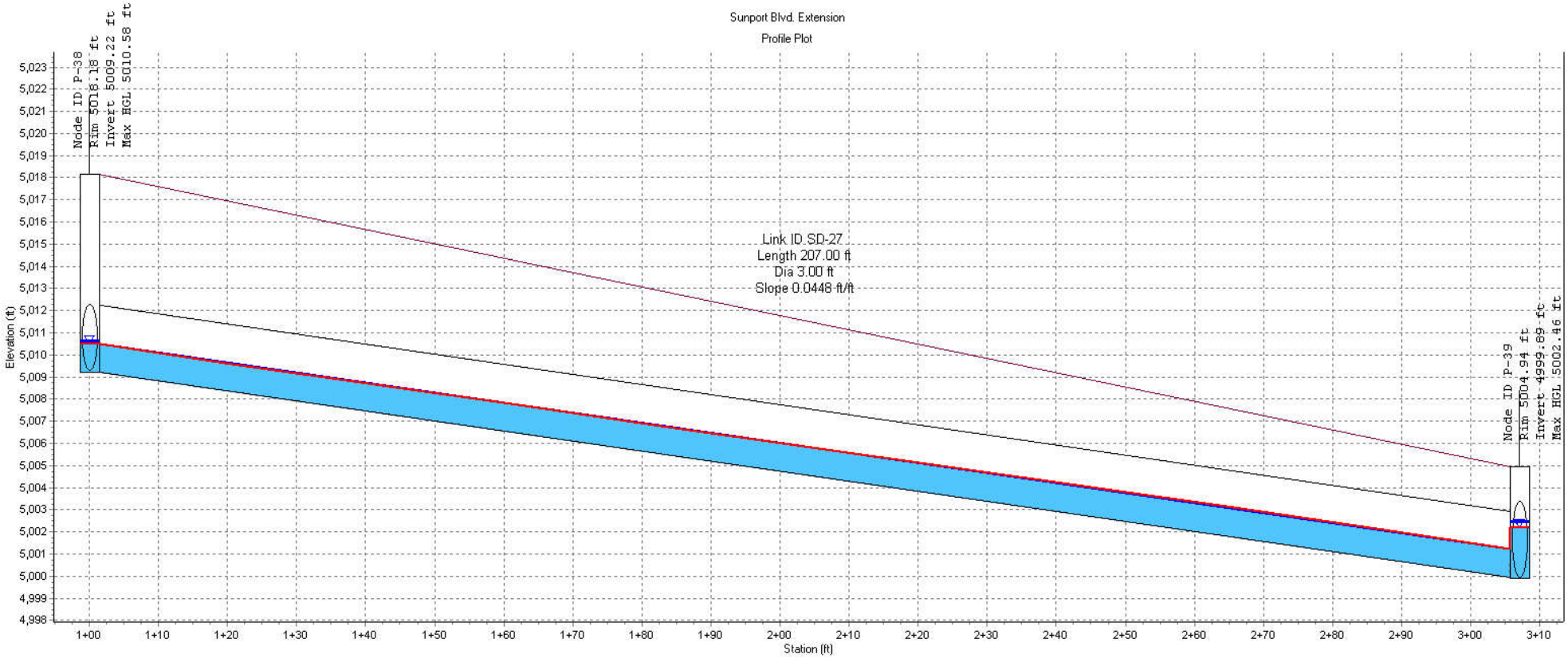

Autodesk Storm and Sanitary Analysis

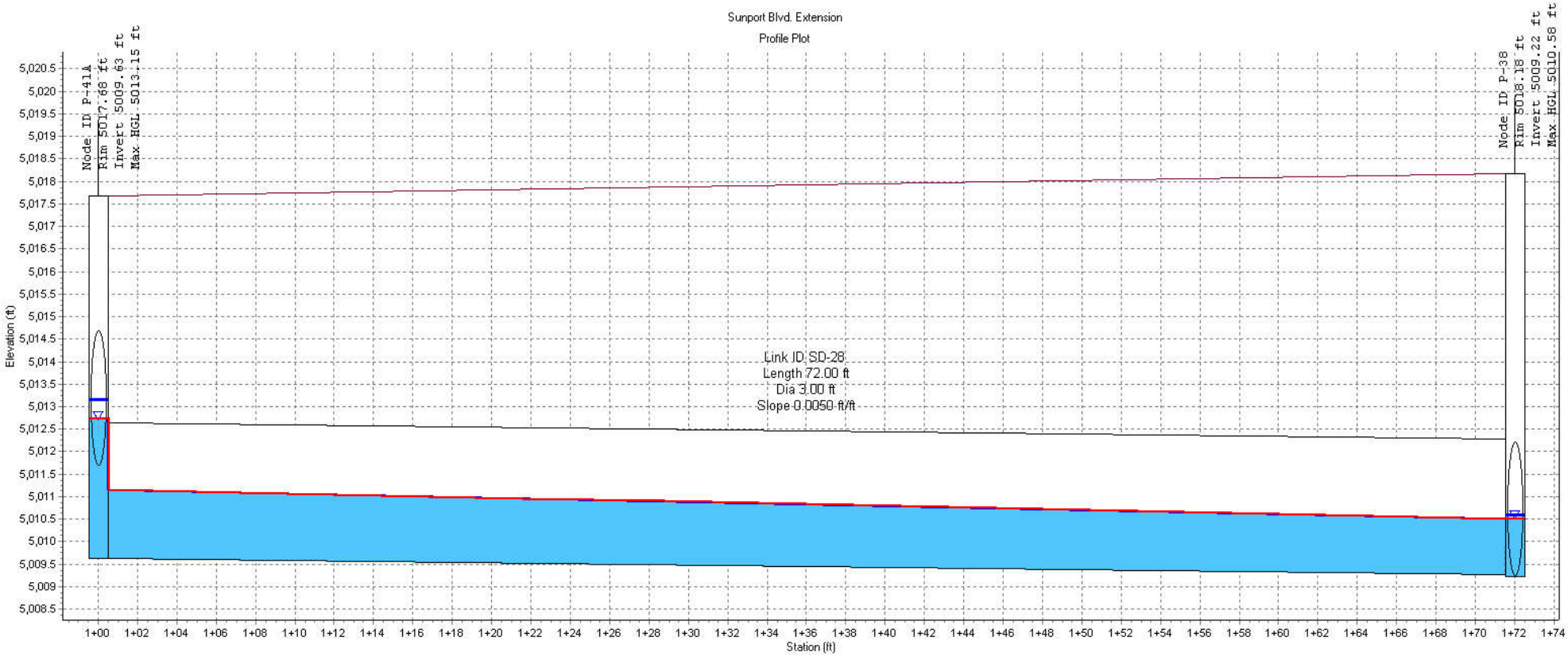

Autodesk Storm and Sanitary Analysis

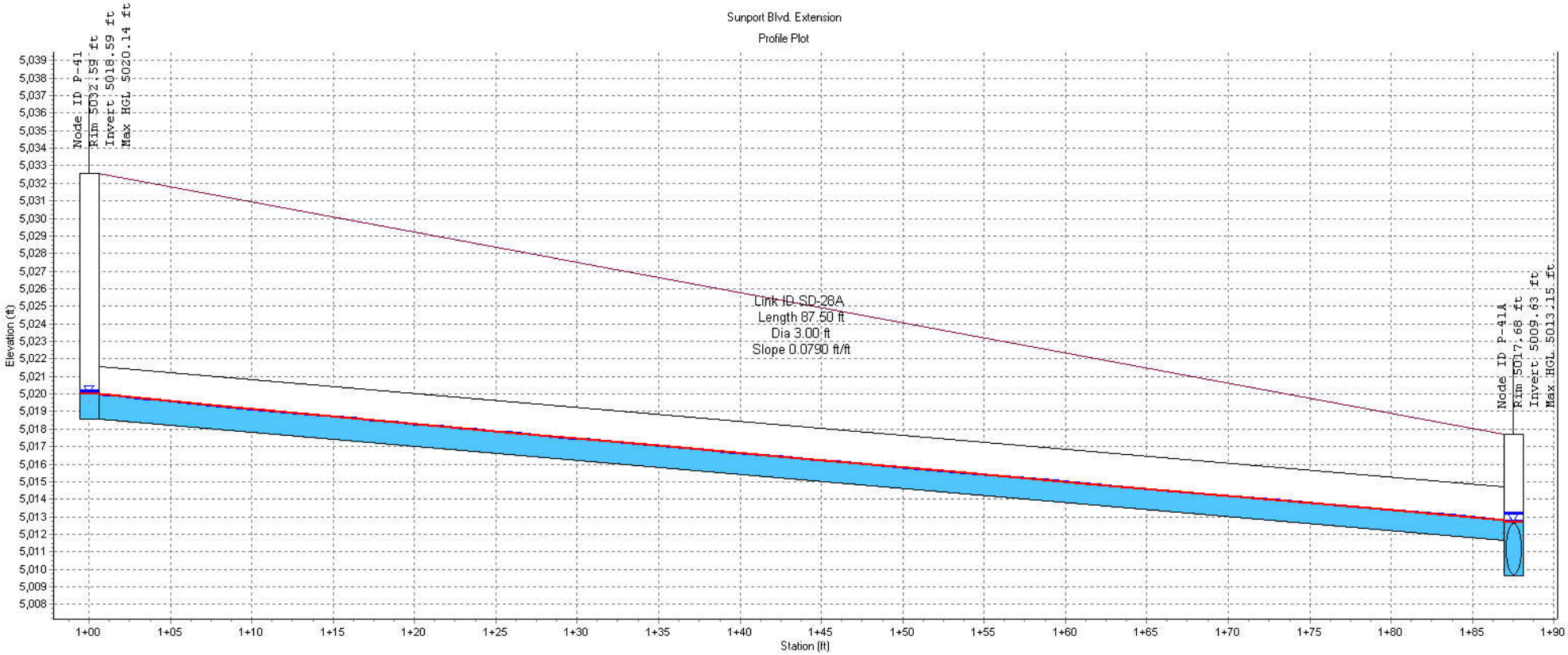

Autodesk Storm and Sanitary Analysis

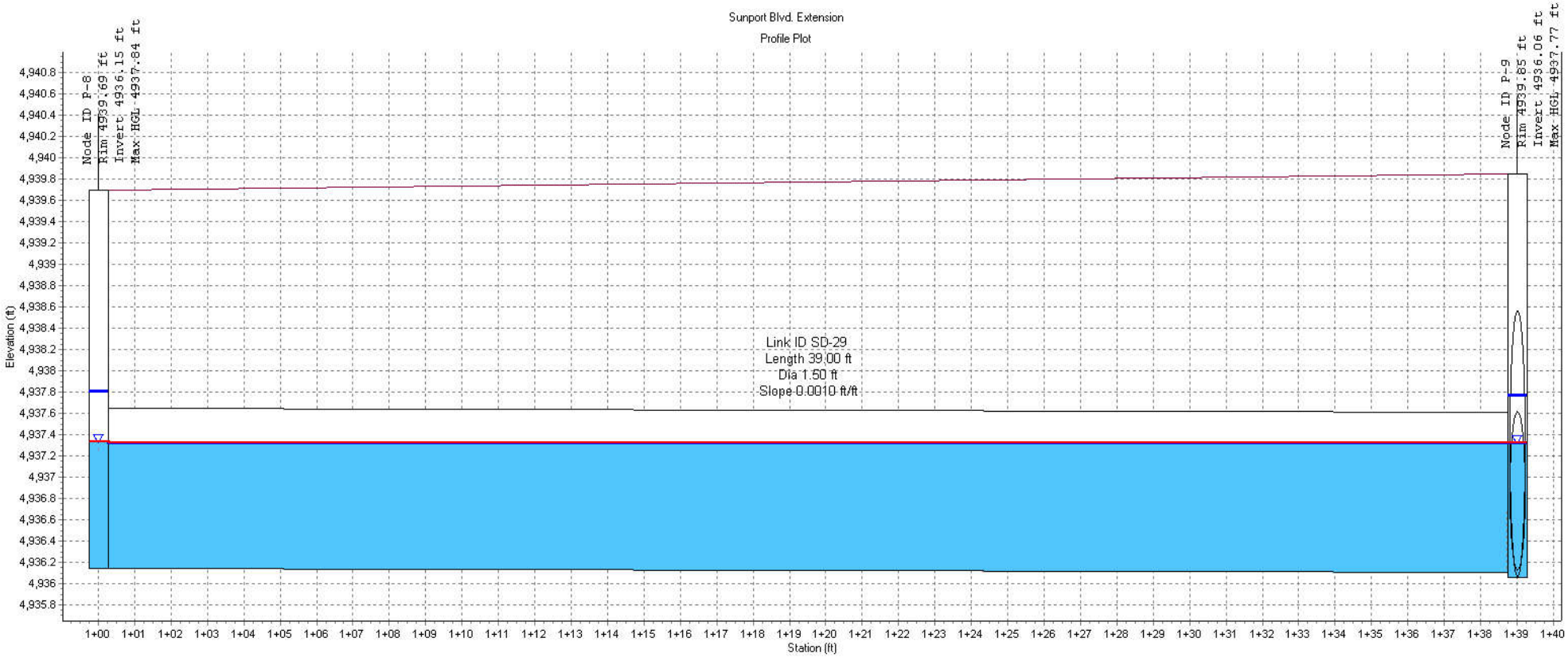

Autodesk Storm and Sanitary Analysis

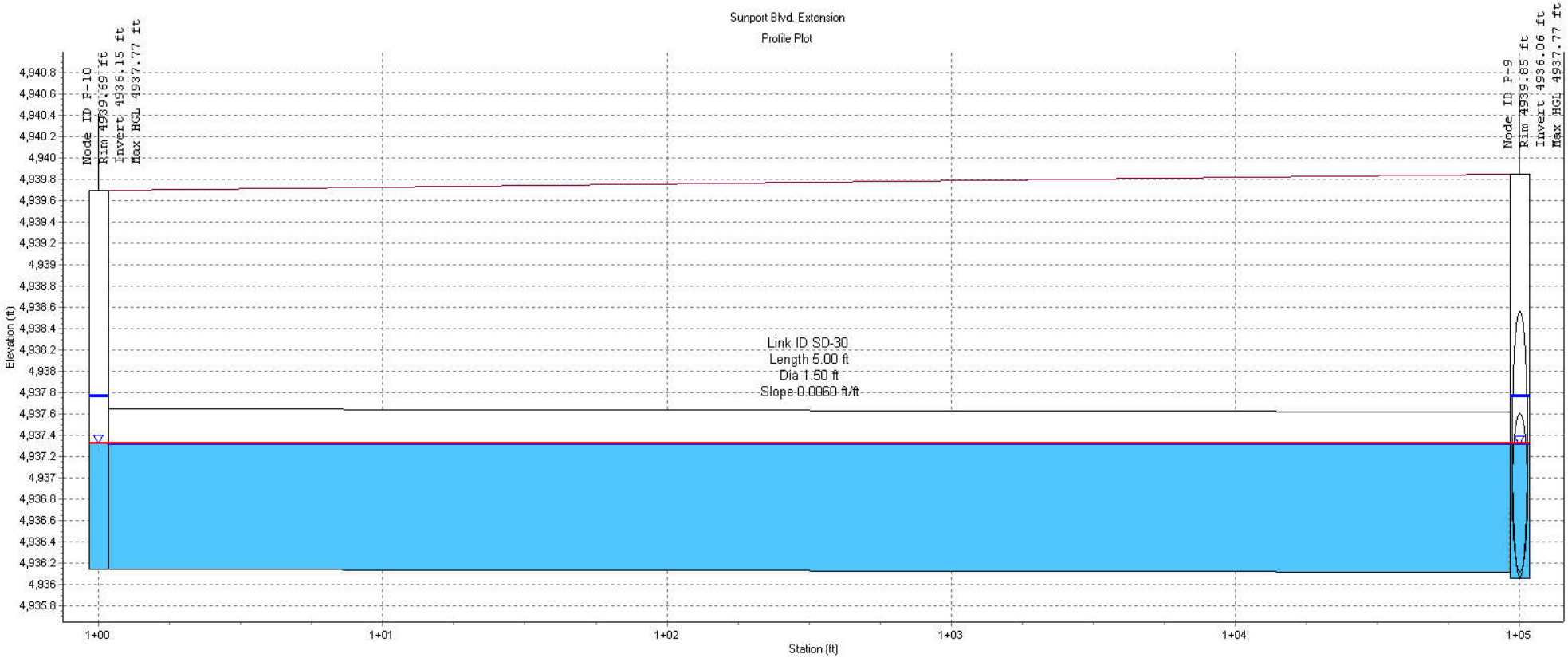

Autodesk Storm and Sanitary Analysis

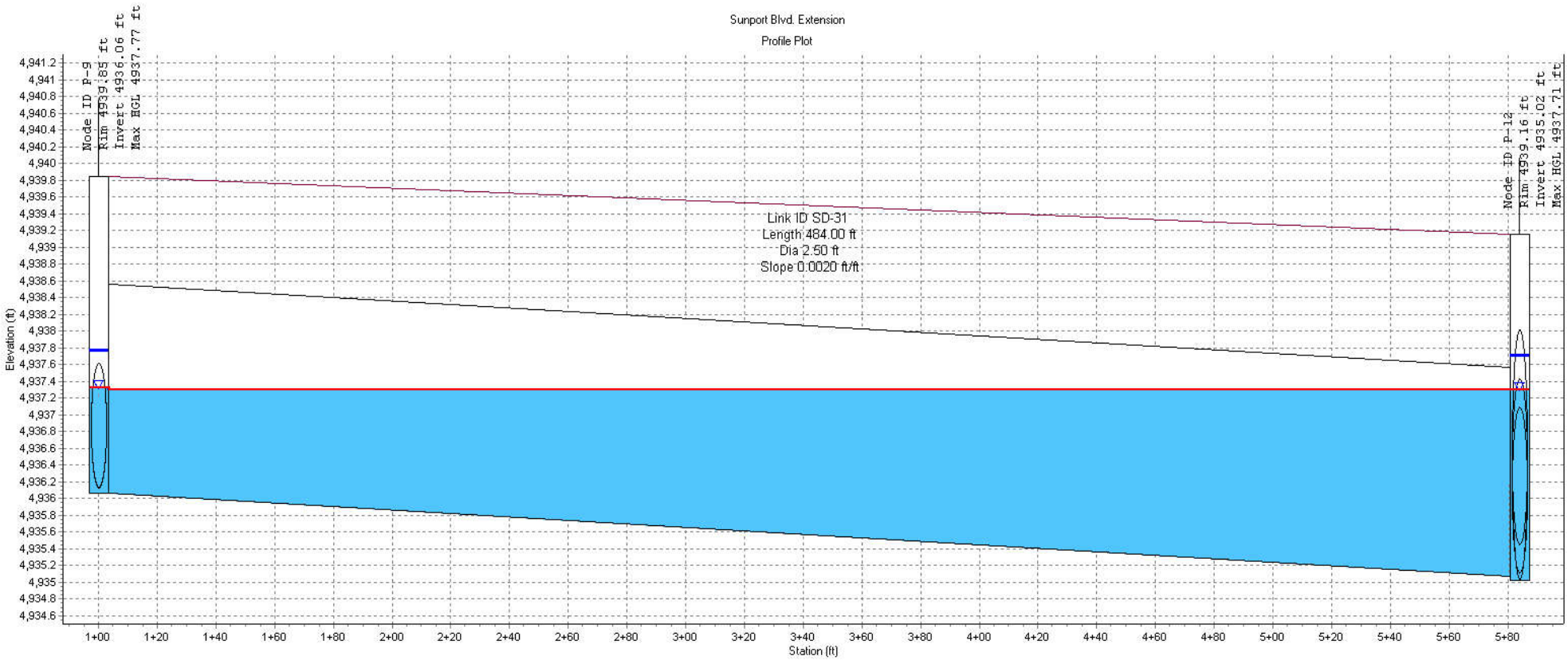

Autodesk Storm and Sanitary Analysis

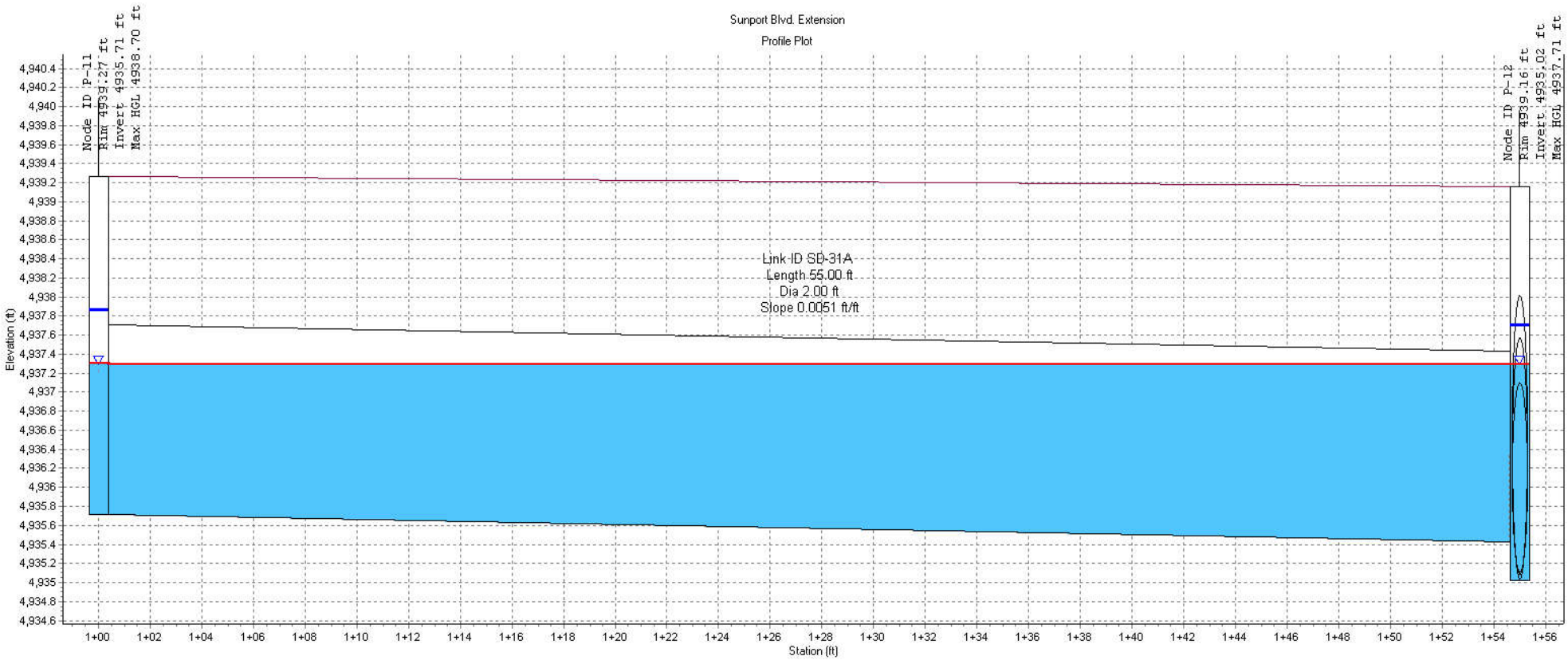

Autodesk Storm and Sanitary Analysis

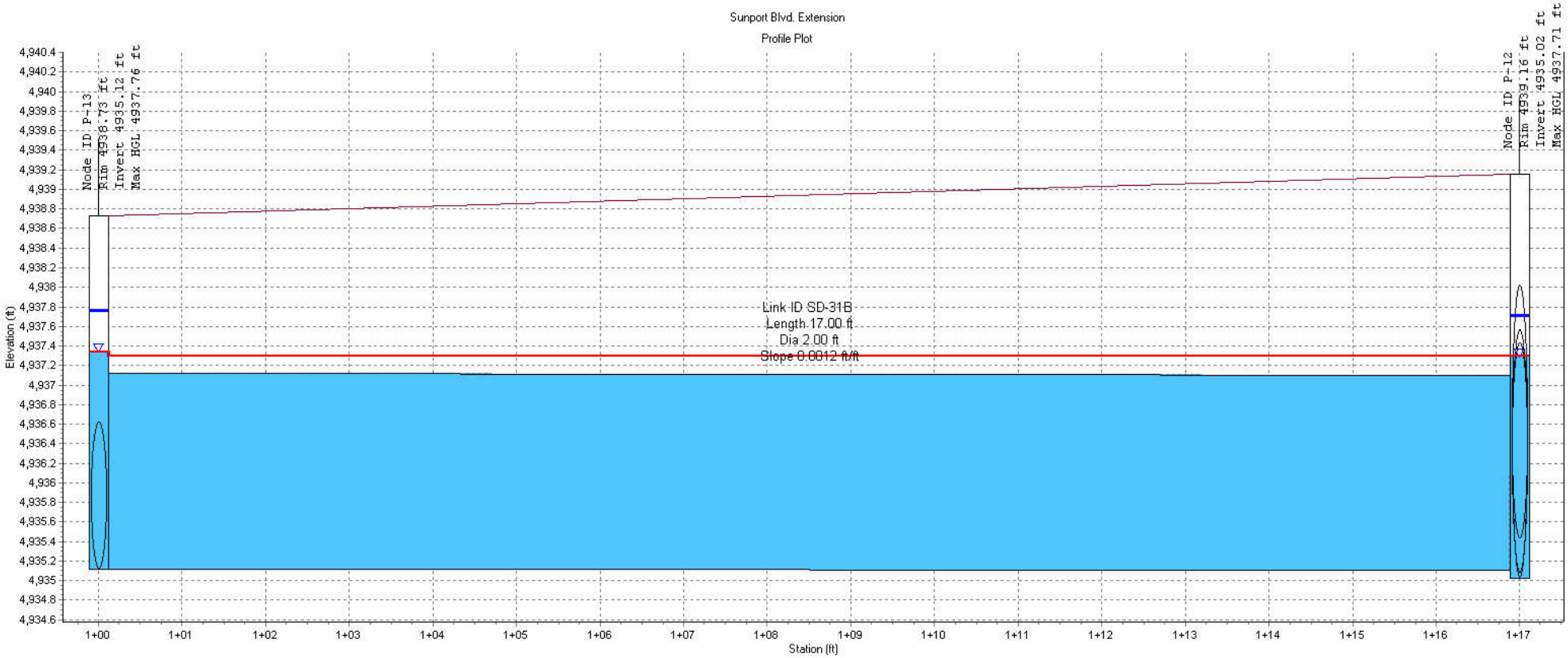

Autodesk Storm and Sanitary Analysis

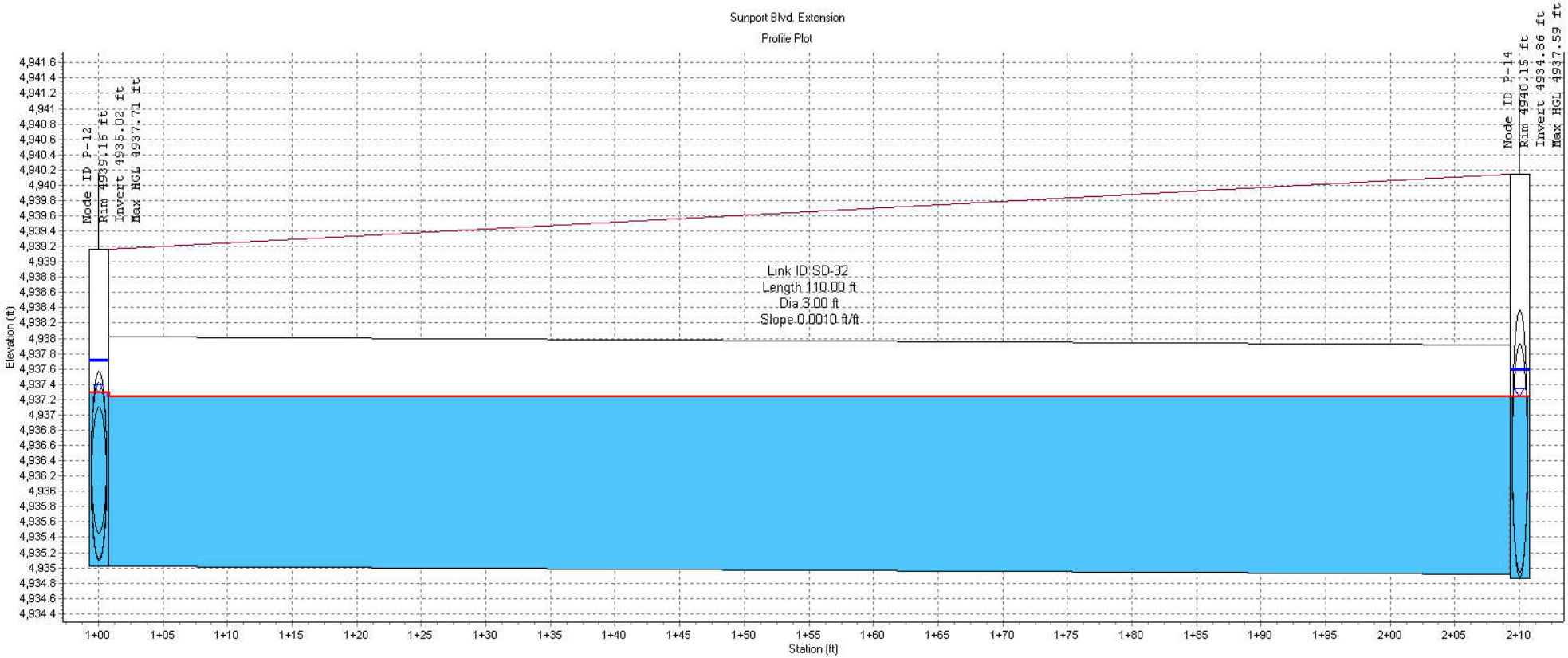

Autodesk Storm and Sanitary Analysis

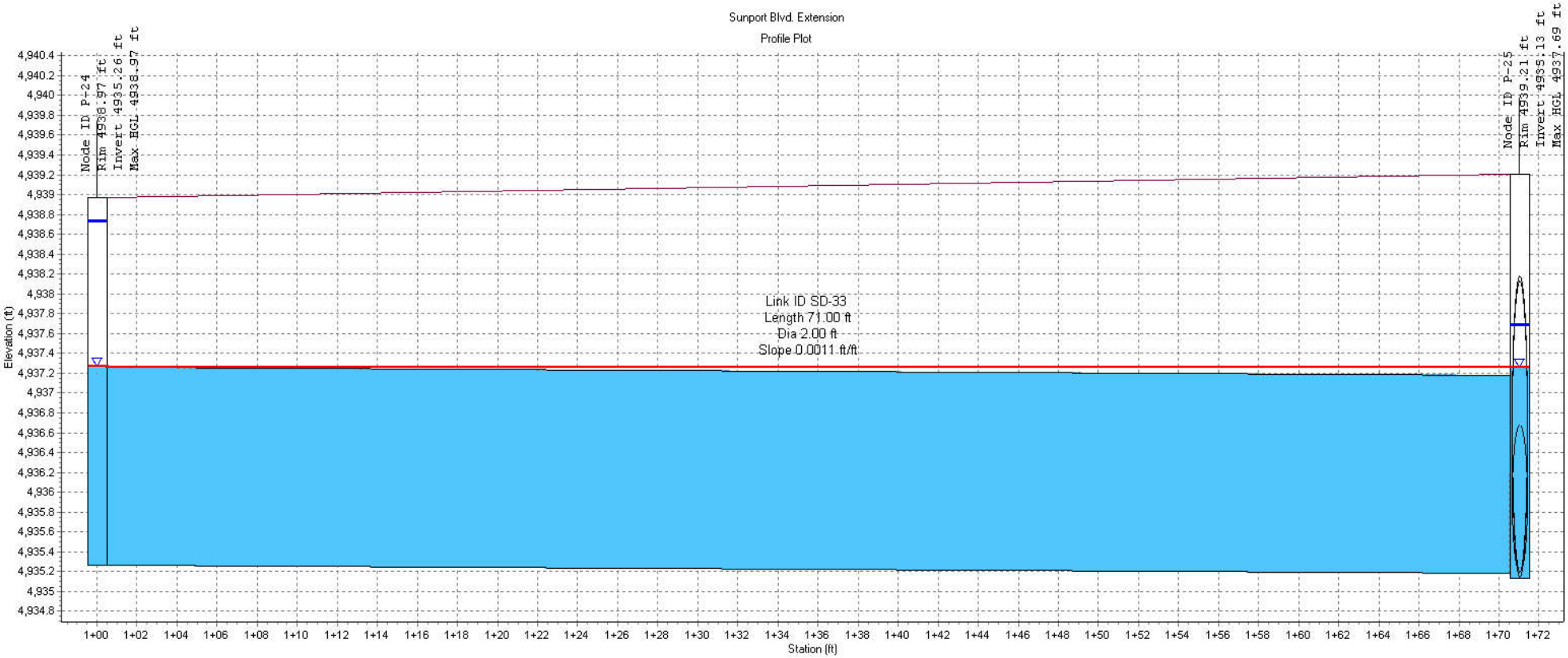

Autodesk Storm and Sanitary Analysis

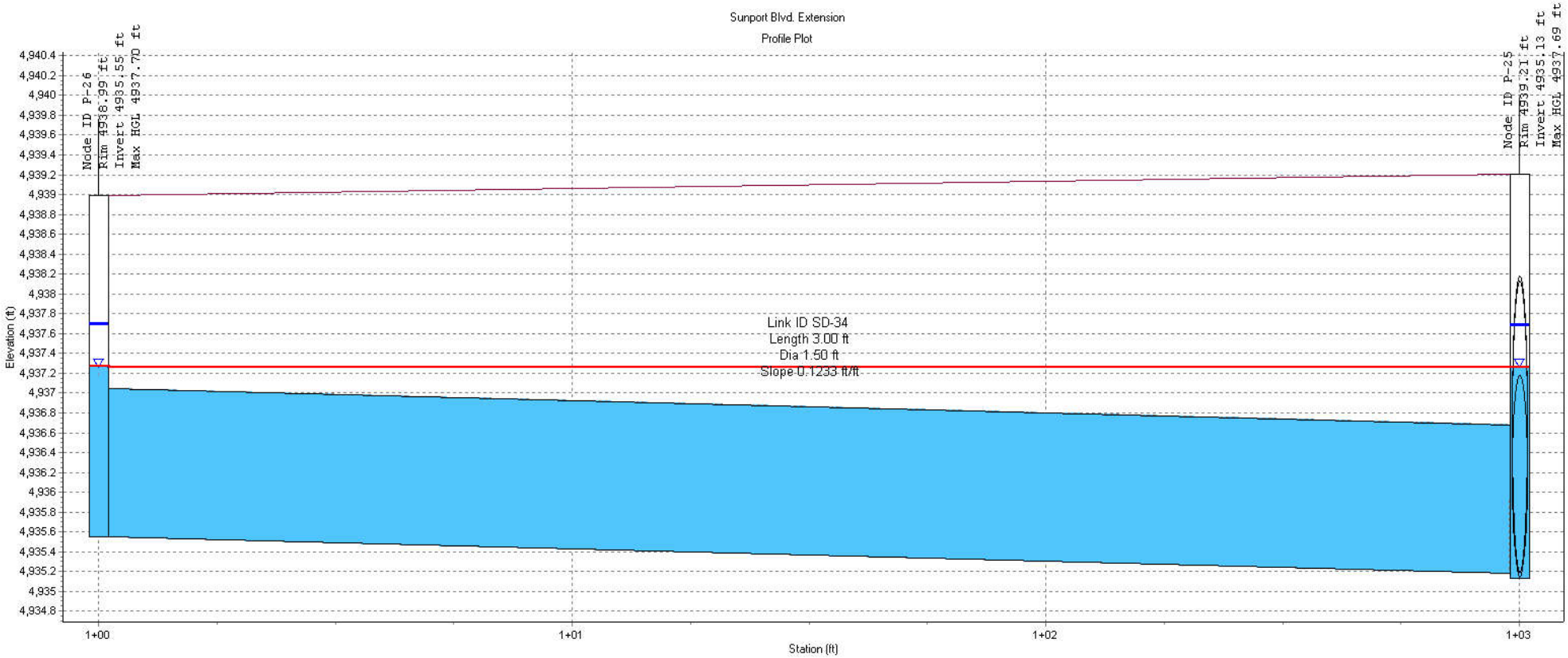
Sunport Blvd. Extension
Profile Plot
Node ID P-26
Rim 4938.99 ft
Invert 4935.55 ft
Max HGL 4937.70 ft
Node ID P-25
Rim 4939.21 ft
Invert 4935.13 ft
Max HGL 4937.69 ft
Link ID SD-34
Length 3.00 ft
Dia 1.50 ft
Slope 0.1233 ft/ft
Elevation (ft)
4,940.4
4,940.2
4,940
4,939.8
4,939.6
4,939.4
4,939.2
4,939
4,938.8
4,938.6
4,938.4
4,938.2
4,938
4,937.8
4,937.6
4,937.4
4,937.2
4,937
4,936.8
4,936.6
4,936.4
4,936.2
4,936
4,935.8
4,935.6
4,935.4
4,935.2
4,935
4,934.8
1+00
1+01
1+02
1+03
Station (ft)

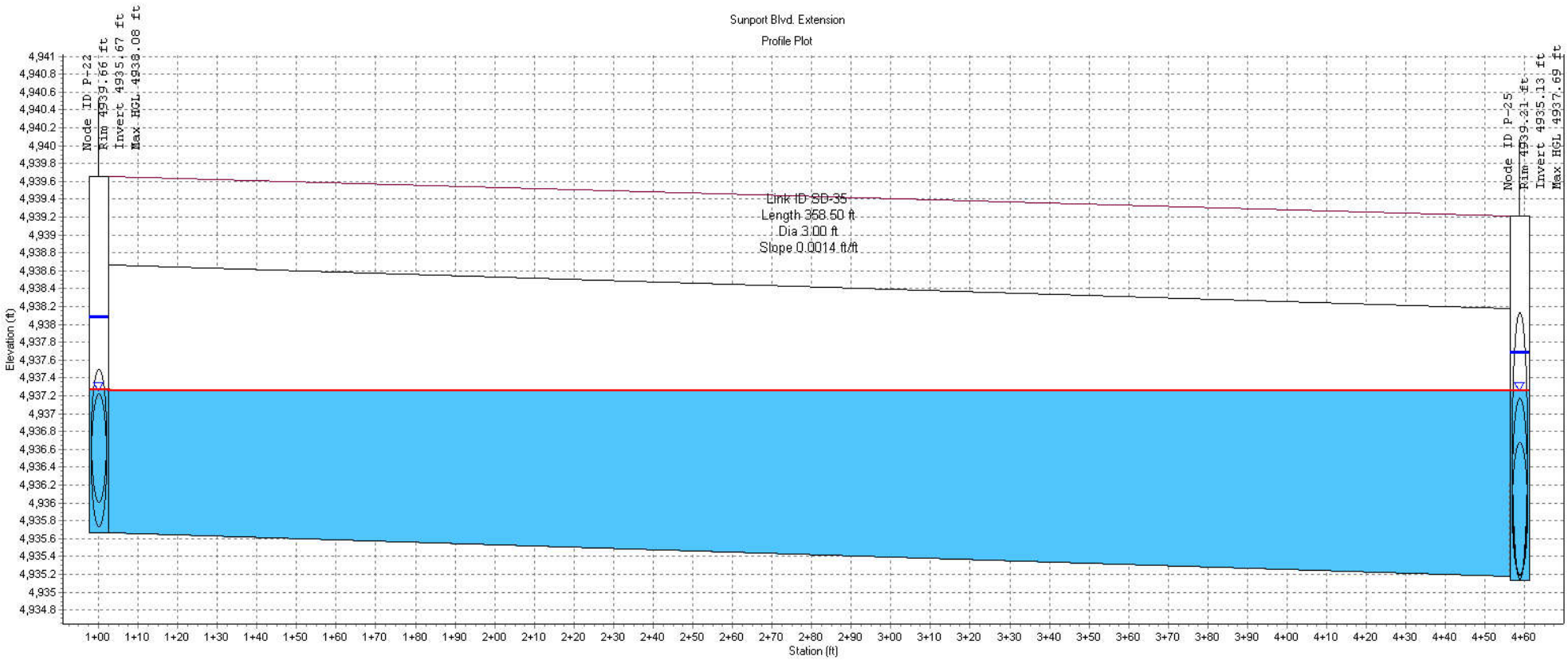

Autodesk Storm and Sanitary Analysis

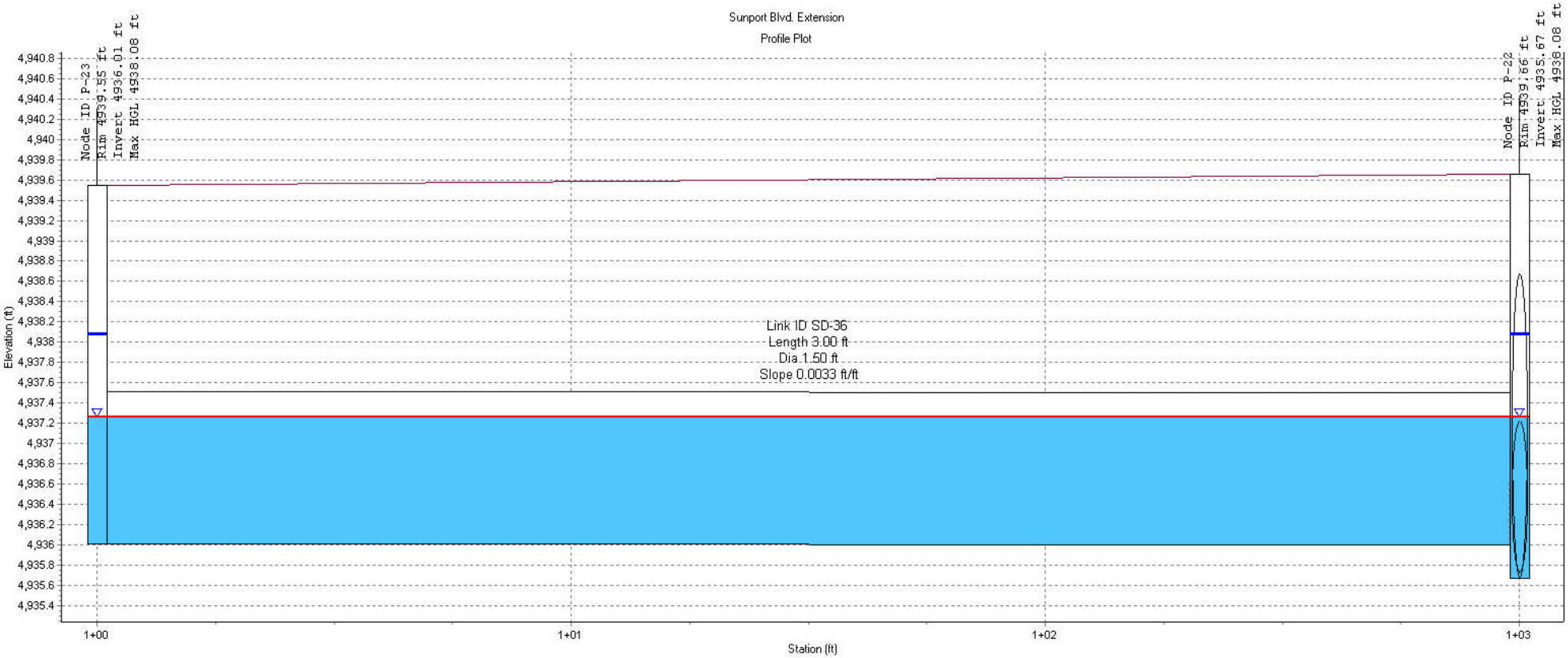

Autodesk Storm and Sanitary Analysis

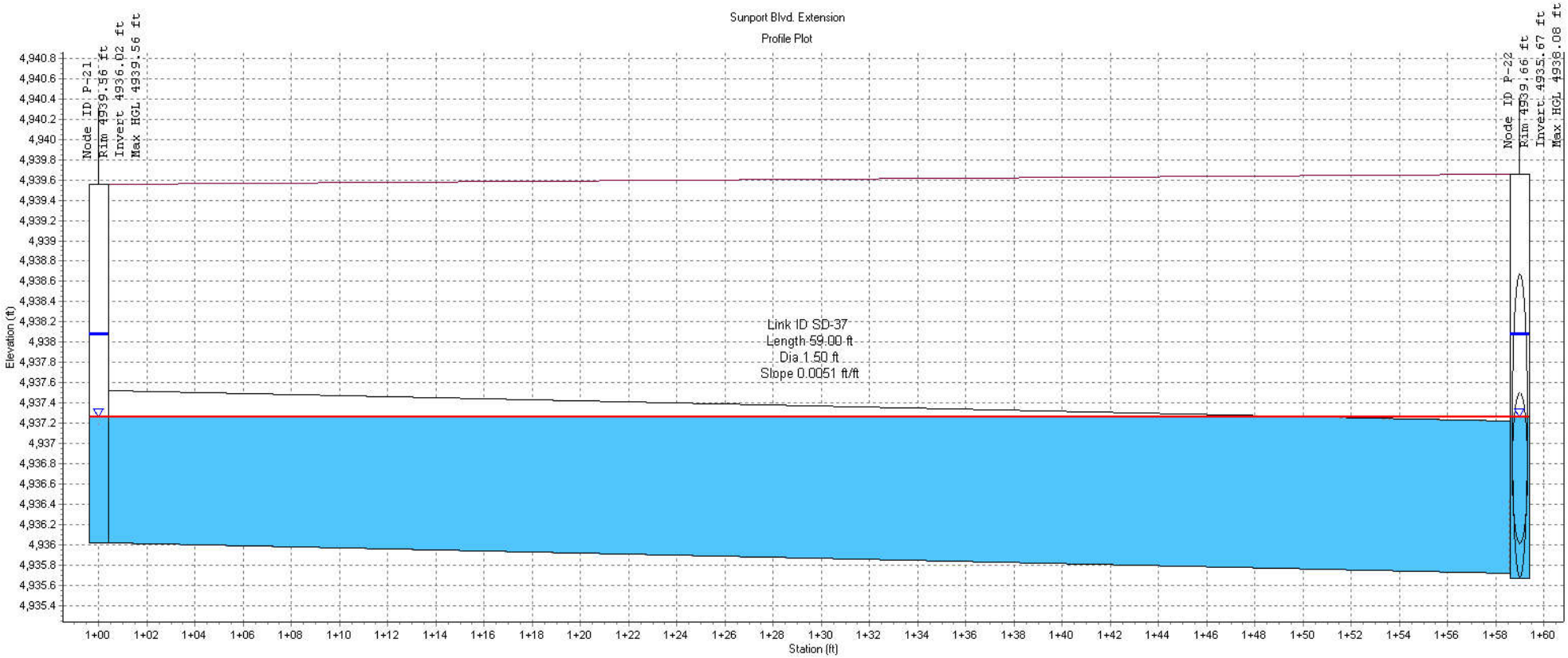
Sunport Blvd. Extension
Profile Plot
Node ID P-21
Rim 4939.56 ft
Invert 4936.02 ft
Max HGL 4939.56 ft
Node ID P-22
Rim 4939.66 ft
Invert 4935.67 ft
Max HGL 4938.08 ft
Link ID SD-37
Length 59.00 ft
Dia 1.50 ft
Slope 0.0051 ft/ft
Elevation (ft)
Station (ft)

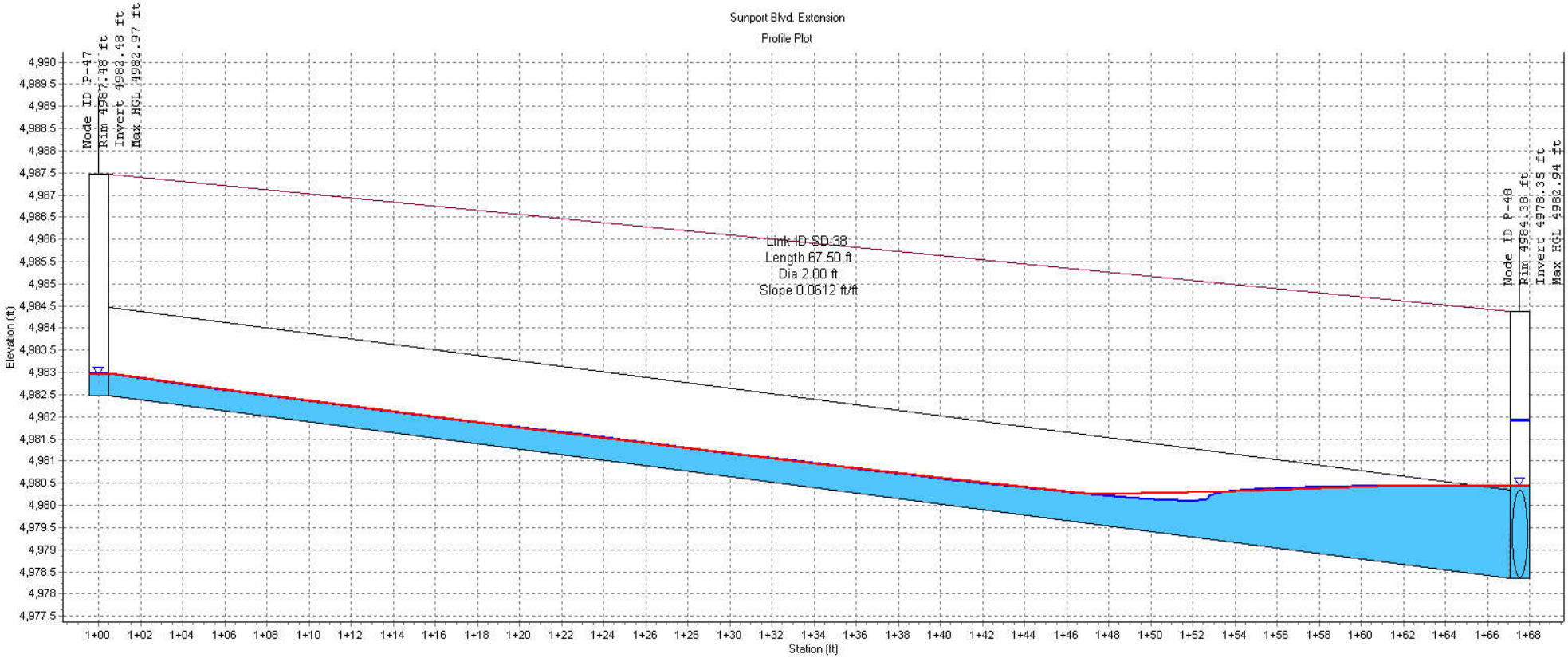

Autodesk Storm and Sanitary Analysis

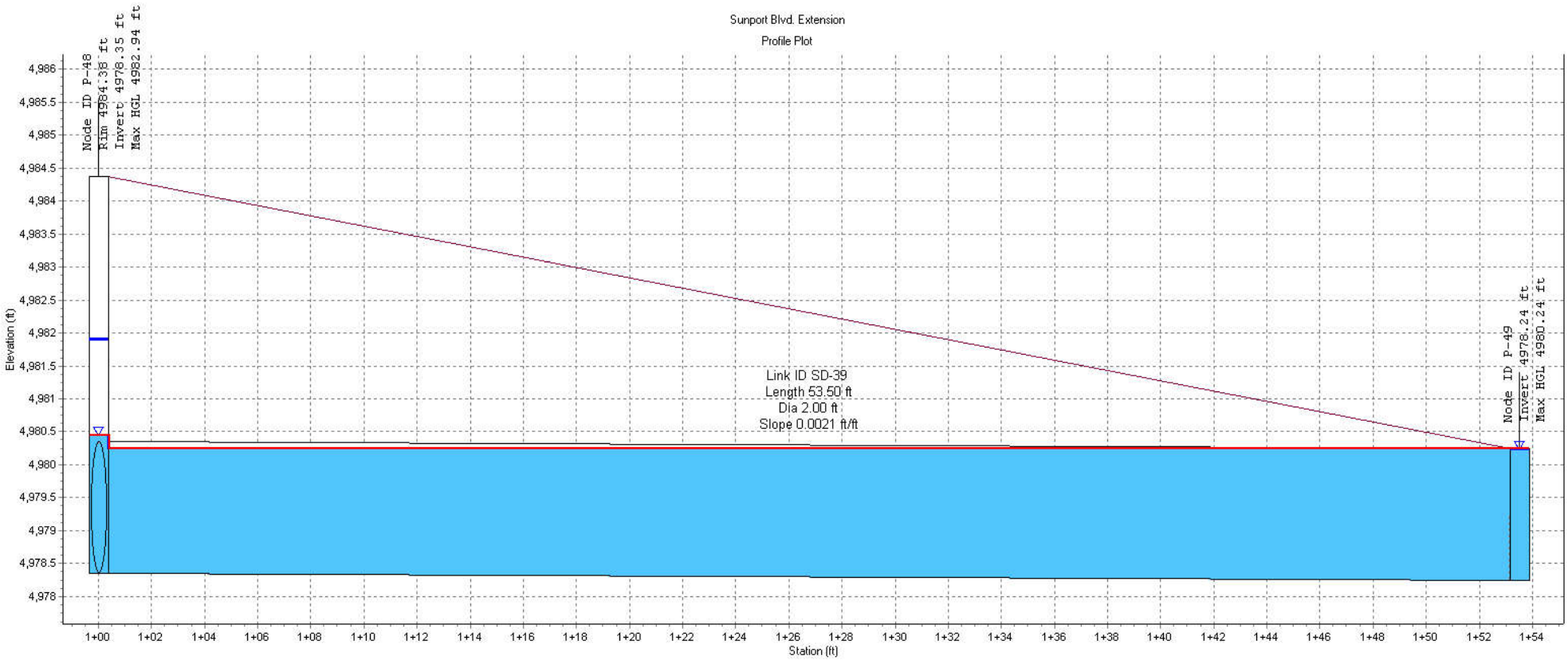

Autodesk Storm and Sanitary Analysis

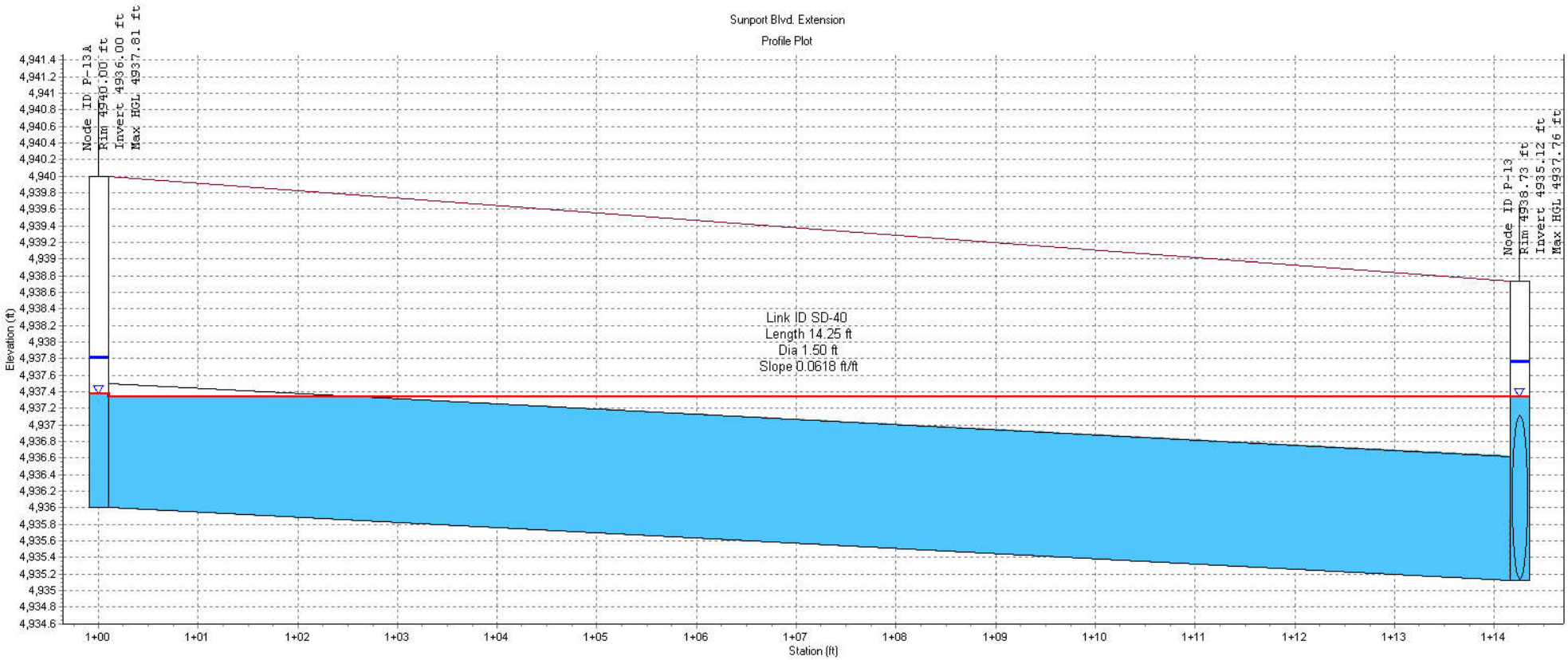

Autodesk Storm and Sanitary Analysis

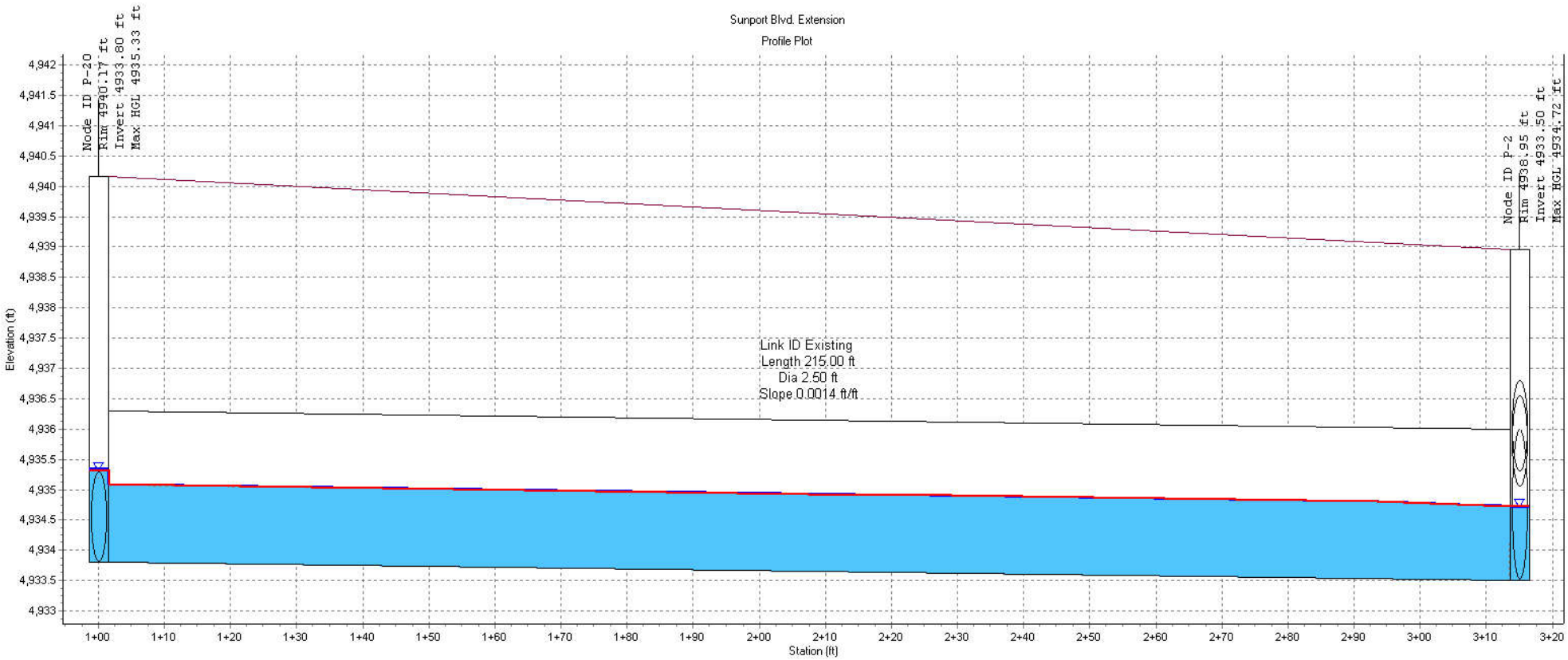

Autodesk Storm and Sanitary Analysis

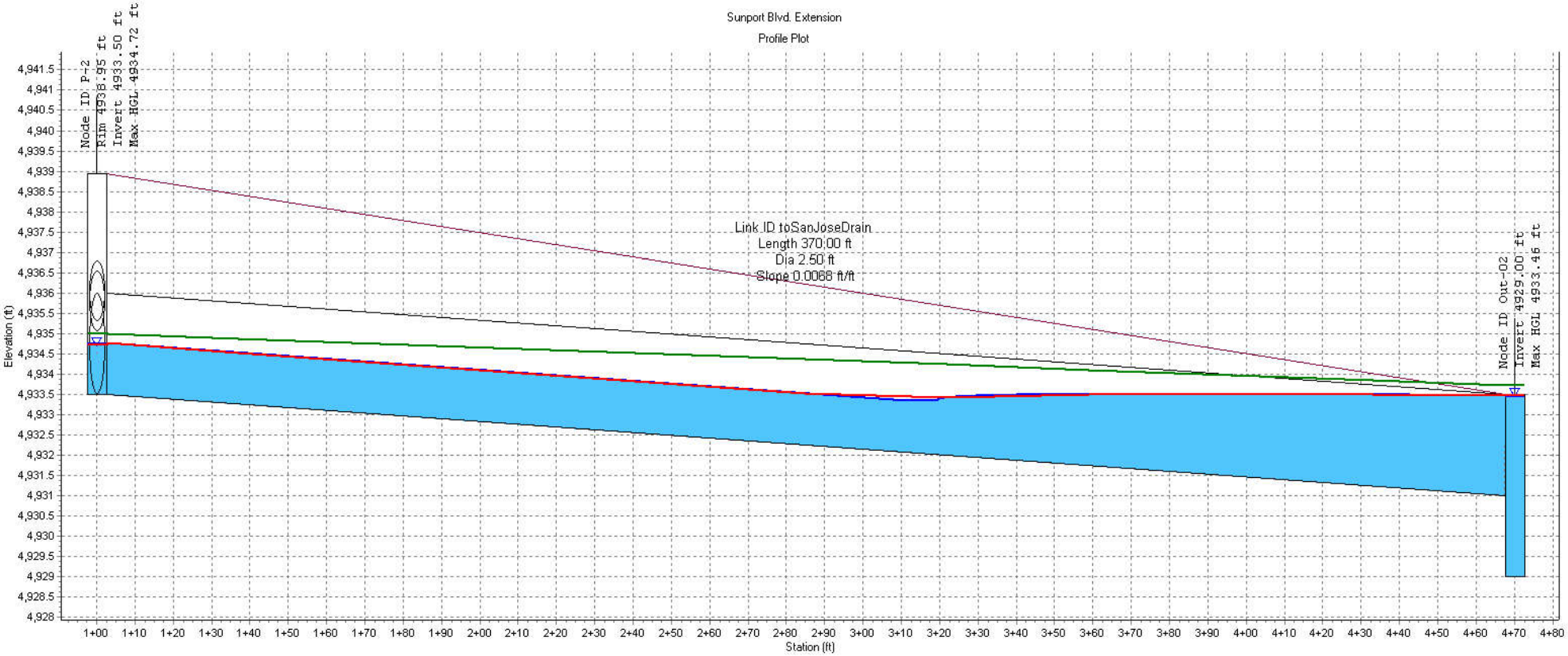

Autodesk Storm and Sanitary Analysis

Inlet Report

Hydraflow Express Extension for Autodesk® AutoCAD® Civil 3D® by Autodesk, Inc. Thursday, Nov 7 2019

COA Single Storm Inlet Type D Grate (Sag)

Grate Inlet

Location	=	Sag
Curb Length (ft)	=	-0-
Throat Height (in)	=	-0-
Grate Area (sqft)	=	3.72
Grate Width (ft)	=	2.08
Grate Length (ft)	=	3.33

Gutter

Slope, Sw (ft/ft)	=	0.063
Slope, Sx (ft/ft)	=	0.020
Local Depr (in)	=	2.75
Gutter Width (ft)	=	2.00
Gutter Slope (%)	=	-0-
Gutter n-value	=	-0-

Calculations

Compute by:		Q vs Depth
Max Depth (in)	=	7

Highlighted

Q Total (cfs)	=	5.75
Q Capt (cfs)	=	5.75
Q Bypass (cfs)	=	-0-
Depth at Inlet (in)	=	7.05
Efficiency (%)	=	100
Gutter Spread (ft)	=	13.63
Gutter Vel (ft/s)	=	-0-
Bypass Spread (ft)	=	-0-
Bypass Depth (in)	=	-0-

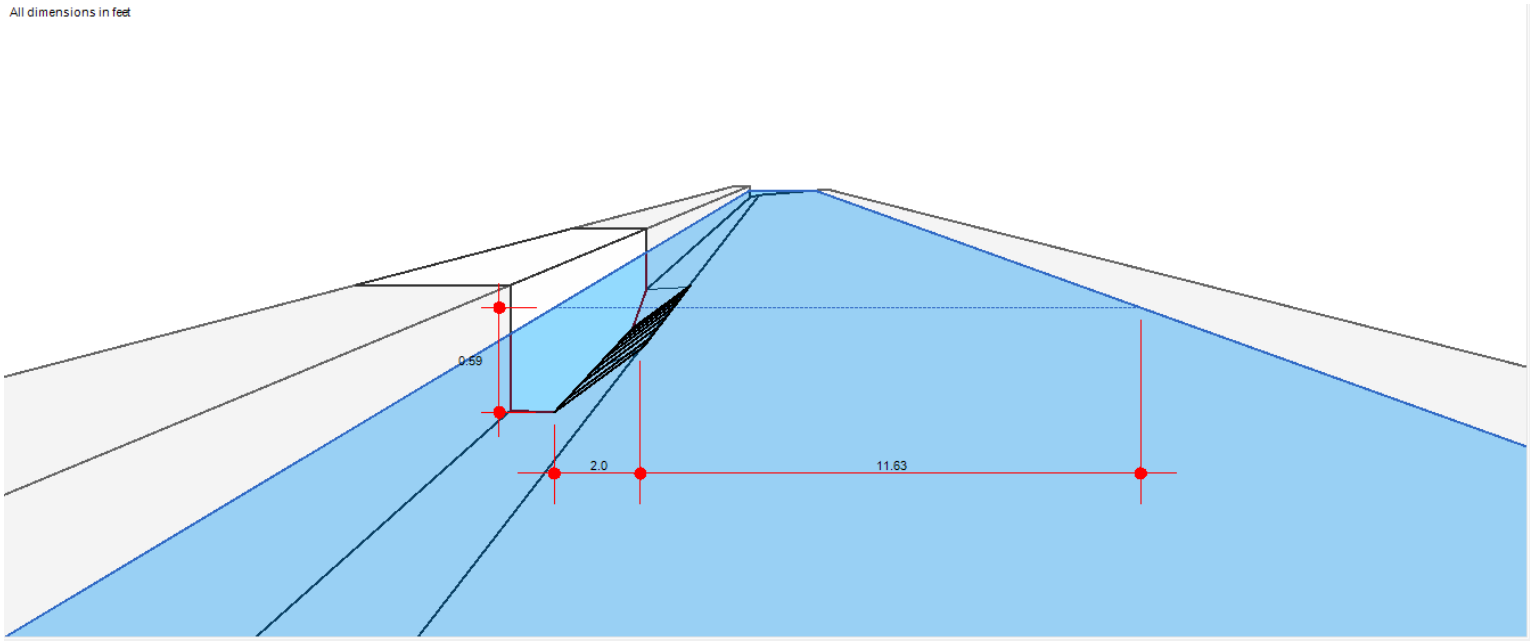

Q		Inlet		Gutter	
Total	Captured	Depth	Efficiency	Depth	Spread
(cfs)	(cfs)	(in)	(%)	(in)	(ft)
0.25	0.25	1.20	100	-1.55	0.56
0.50	0.50	1.90	100	-0.85	0.89
0.75	0.75	2.49	100	-0.26	1.17
1.00	1.00	3.01	100	0.26	1.41
1.25	1.25	3.50	100	0.75	1.64
1.50	1.50	3.95	100	1.20	1.85
1.75	1.75	4.38	100	1.63	2.48
2.00	2.00	4.61	100	1.86	3.44
2.25	2.25	4.80	100	2.05	4.26
2.50	2.50	4.99	100	2.24	5.04
2.75	2.75	5.17	100	2.42	5.80
3.00	3.00	5.35	100	2.60	6.54
3.25	3.25	5.52	100	2.77	7.25
3.50	3.50	5.69	100	2.94	7.95
3.75	3.75	5.85	100	3.10	8.63
4.00	4.00	6.01	100	3.26	9.30
4.25	4.25	6.17	100	3.42	9.95
4.50	4.50	6.32	100	3.57	10.59
4.75	4.75	6.47	100	3.72	11.22
5.00	5.00	6.62	100	3.87	11.84
5.25	5.25	6.77	100	4.02	12.44
5.50	5.50	6.91	100	4.16	13.04
5.75	5.75	7.05	100	4.30	13.63

Gutter	Bypass		
Velocity	Q	Spread	Depth
(ft/s)	(cfs)	(ft)	(in)
n/a	n/a	n/a	n/a
n/a	n/a	n/a	n/a
n/a	n/a	n/a	n/a
n/a	n/a	n/a	n/a
n/a	n/a	n/a	n/a
n/a	n/a	n/a	n/a
n/a	n/a	n/a	n/a
n/a	n/a	n/a	n/a
n/a	n/a	n/a	n/a
n/a	n/a	n/a	n/a
n/a	n/a	n/a	n/a
n/a	n/a	n/a	n/a
n/a	n/a	n/a	n/a
n/a	n/a	n/a	n/a
n/a	n/a	n/a	n/a
n/a	n/a	n/a	n/a
n/a	n/a	n/a	n/a
n/a	n/a	n/a	n/a
n/a	n/a	n/a	n/a
n/a	n/a	n/a	n/a
n/a	n/a	n/a	n/a
n/a	n/a	n/a	n/a
n/a	n/a	n/a	n/a

Inlet Report

Hydraflow Express Extension for Autodesk® AutoCAD® Civil 3D® by Autodesk, Inc. Thursday, Nov 7 2019

COA Double Storm Inlet Type D Grate (Sag)

Grate Inlet

Location	=	Sag
Curb Length (ft)	=	-0-
Throat Height (in)	=	-0-
Grate Area (sqft)	=	7.44
Grate Width (ft)	=	2.08
Grate Length (ft)	=	6.66

Gutter

Slope, Sw (ft/ft)	=	0.063
Slope, Sx (ft/ft)	=	0.020
Local Depr (in)	=	2.75
Gutter Width (ft)	=	2.00
Gutter Slope (%)	=	-0-
Gutter n-value	=	-0-

Calculations

Compute by:		Q vs Depth
Max Depth (in)	=	8

Highlighted

Q Total (cfs)	=	8.50
Q Capt (cfs)	=	8.50
Q Bypass (cfs)	=	-0-
Depth at Inlet (in)	=	7.13
Efficiency (%)	=	100
Gutter Spread (ft)	=	13.94
Gutter Vel (ft/s)	=	-0-
Bypass Spread (ft)	=	-0-
Bypass Depth (in)	=	-0-

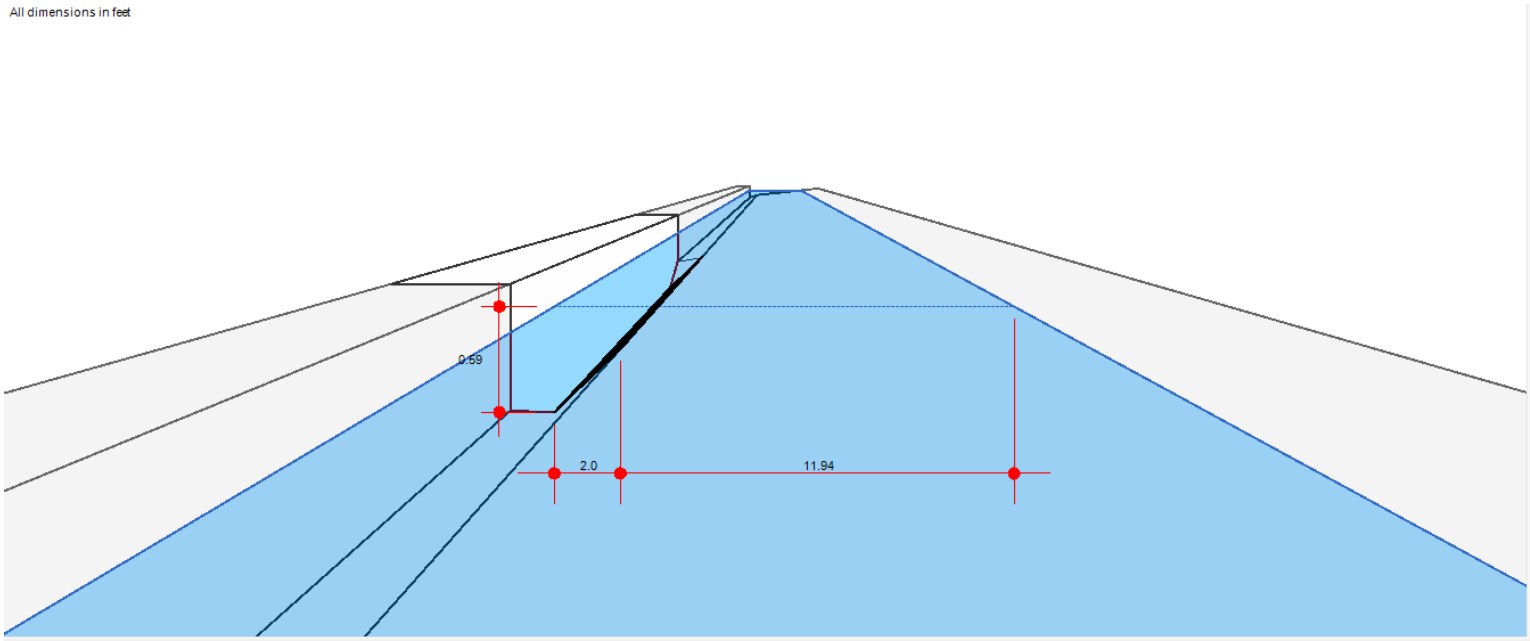

Q		Inlet		Gutter	
Total	Captured	Depth	Efficiency	Depth	Spread
(cfs)	(cfs)	(in)	(%)	(in)	(ft)
0.25	0.25	0.94	100	-1.81	0.44
0.50	0.50	1.49	100	-1.26	0.70
0.75	0.75	1.95	100	-0.80	0.91
1.00	1.00	2.36	100	-0.39	1.11
1.25	1.25	2.74	100	-0.01	1.28
1.50	1.50	3.09	100	0.34	1.45
1.75	1.75	3.43	100	0.68	1.61
2.00	2.00	3.74	100	0.99	1.76
2.25	2.25	4.05	100	1.30	1.90
2.50	2.50	4.34	100	1.59	2.34
2.75	2.75	4.53	100	1.78	3.12
3.00	3.00	4.67	100	1.92	3.70
3.25	3.25	4.80	100	2.05	4.26
3.50	3.50	4.93	100	2.18	4.80
3.75	3.75	5.06	100	2.31	5.34
4.00	4.00	5.19	100	2.44	5.86
4.25	4.25	5.31	100	2.56	6.37
4.50	4.50	5.43	100	2.68	6.87
4.75	4.75	5.55	100	2.80	7.36
5.00	5.00	5.66	100	2.91	7.84
5.25	5.25	5.78	100	3.03	8.32
5.50	5.50	5.89	100	3.14	8.79
5.75	5.75	6.00	100	3.25	9.25
6.00	6.00	6.11	100	3.36	9.70
6.25	6.25	6.22	100	3.47	10.15
6.50	6.50	6.32	100	3.57	10.59
6.75	6.75	6.43	100	3.68	11.03
7.00	7.00	6.53	100	3.78	11.46
7.25	7.25	6.63	100	3.88	11.88
7.50	7.50	6.73	100	3.98	12.30
7.75	7.75	6.83	100	4.08	12.72
8.00	8.00	6.93	100	4.18	13.13
8.25	8.25	7.03	100	4.28	13.54
8.50	8.50	7.13	100	4.38	13.94
8.75	8.75	7.22	100	4.47	14.34
9.00	9.00	7.32	100	4.57	14.74
9.25	9.25	7.41	100	4.66	15.13
9.50	9.50	7.51	100	4.76	15.52
9.75	9.75	7.60	100	4.85	15.90
10.00	10.00	7.69	100	4.94	16.28
10.25	10.25	7.78	100	5.03	16.66
10.50	10.50	7.87	100	5.12	17.04
10.75	10.75	7.96	100	5.21	17.41
11.00	11.00	8.05	100	5.30	17.78

Gutter	Bypass		
Velocity	Q	Spread	Depth
(ft/s)	(cfs)	(ft)	(in)
n/a	n/a	n/a	n/a
n/a	n/a	n/a	n/a
n/a	n/a	n/a	n/a
n/a	n/a	n/a	n/a
n/a	n/a	n/a	n/a
n/a	n/a	n/a	n/a
n/a	n/a	n/a	n/a
n/a	n/a	n/a	n/a
n/a	n/a	n/a	n/a
n/a	n/a	n/a	n/a
n/a	n/a	n/a	n/a
n/a	n/a	n/a	n/a
n/a	n/a	n/a	n/a
n/a	n/a	n/a	n/a
n/a	n/a	n/a	n/a
n/a	n/a	n/a	n/a
n/a	n/a	n/a	n/a
n/a	n/a	n/a	n/a
n/a	n/a	n/a	n/a
n/a	n/a	n/a	n/a
n/a	n/a	n/a	n/a
n/a	n/a	n/a	n/a
n/a	n/a	n/a	n/a
n/a	n/a	n/a	n/a
n/a	n/a	n/a	n/a
n/a	n/a	n/a	n/a
n/a	n/a	n/a	n/a
n/a	n/a	n/a	n/a
n/a	n/a	n/a	n/a
n/a	n/a	n/a	n/a
n/a	n/a	n/a	n/a
n/a	n/a	n/a	n/a
n/a	n/a	n/a	n/a
n/a	n/a	n/a	n/a
n/a	n/a	n/a	n/a
n/a	n/a	n/a	n/a
n/a	n/a	n/a	n/a
n/a	n/a	n/a	n/a
n/a	n/a	n/a	n/a
n/a	n/a	n/a	n/a
n/a	n/a	n/a	n/a
n/a	n/a	n/a	n/a
n/a	n/a	n/a	n/a
n/a	n/a	n/a	n/a

Inlet Report

Hydraflow Express Extension for Autodesk® AutoCAD® Civil 3D® by Autodesk, Inc. Thursday, Nov 7 2019

COA Triple Storm Inlet Type D Grate (Sag)

Grate Inlet

Location	=	Sag
Curb Length (ft)	=	-0-
Throat Height (in)	=	-0-
Grate Area (sqft)	=	11.16
Grate Width (ft)	=	2.08
Grate Length (ft)	=	9.99

Gutter

Slope, Sw (ft/ft)	=	0.063
Slope, Sx (ft/ft)	=	0.020
Local Depr (in)	=	2.75
Gutter Width (ft)	=	2.00
Gutter Slope (%)	=	-0-
Gutter n-value	=	-0-

Calculations

Compute by:		Q vs Depth
Max Depth (in)	=	8

Highlighted

Q Total (cfs)	=	11.00
Q Capt (cfs)	=	11.00
Q Bypass (cfs)	=	-0-
Depth at Inlet (in)	=	7.09
Efficiency (%)	=	100
Gutter Spread (ft)	=	13.80
Gutter Vel (ft/s)	=	-0-
Bypass Spread (ft)	=	-0-
Bypass Depth (in)	=	-0-

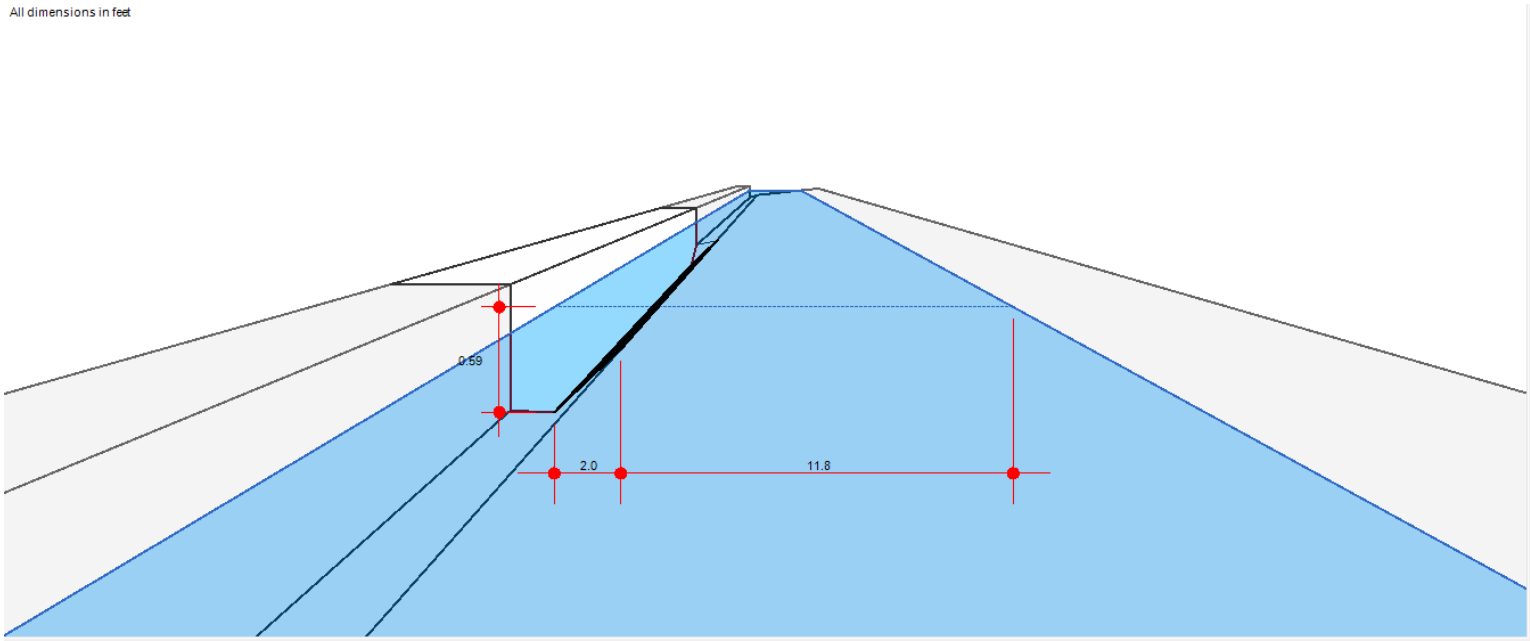

Q		Inlet		Gutter	
Total	Captured	Depth	Efficiency	Depth	Spread
(cfs)	(cfs)	(in)	(%)	(in)	(ft)
0.25	0.25	0.78	100	-1.97	0.37
0.50	0.50	1.24	100	-1.51	0.58
0.75	0.75	1.63	100	-1.12	0.76
1.00	1.00	1.97	100	-0.78	0.93
1.25	1.25	2.29	100	-0.46	1.07
1.50	1.50	2.58	100	-0.17	1.21
1.75	1.75	2.86	100	0.11	1.34
2.00	2.00	3.13	100	0.38	1.47
2.25	2.25	3.39	100	0.64	1.59
2.50	2.50	3.63	100	0.88	1.70
2.75	2.75	3.87	100	1.12	1.82
3.00	3.00	4.10	100	1.35	1.93
3.25	3.25	4.33	100	1.58	2.27
3.50	3.50	4.49	100	1.74	2.95
3.75	3.75	4.60	100	1.85	3.39
4.00	4.00	4.70	100	1.95	3.83
4.25	4.25	4.80	100	2.05	4.26
4.50	4.50	4.90	100	2.15	4.68
4.75	4.75	5.00	100	2.25	5.09
5.00	5.00	5.10	100	2.35	5.49
5.25	5.25	5.20	100	2.45	5.89
5.50	5.50	5.29	100	2.54	6.28
5.75	5.75	5.38	100	2.63	6.66
6.00	6.00	5.47	100	2.72	7.04
6.25	6.25	5.56	100	2.81	7.42
6.50	6.50	5.65	100	2.90	7.79
6.75	6.75	5.74	100	2.99	8.15
7.00	7.00	5.82	100	3.07	8.51
7.25	7.25	5.91	100	3.16	8.87
7.50	7.50	5.99	100	3.24	9.22
7.75	7.75	6.08	100	3.33	9.57
8.00	8.00	6.16	100	3.41	9.91
8.25	8.25	6.24	100	3.49	10.25
8.50	8.50	6.32	100	3.57	10.59
8.75	8.75	6.40	100	3.65	10.92
9.00	9.00	6.48	100	3.73	11.25
9.25	9.25	6.56	100	3.81	11.58
9.50	9.50	6.64	100	3.89	11.91
9.75	9.75	6.72	100	3.97	12.23
10.00	10.00	6.79	100	4.04	12.55
10.25	10.25	6.87	100	4.12	12.86
10.50	10.50	6.94	100	4.19	13.18
10.75	10.75	7.02	100	4.27	13.49
11.00	11.00	7.09	100	4.34	13.80
11.25	11.25	7.17	100	4.42	14.11
11.50	11.50	7.24	100	4.49	14.41
11.75	11.75	7.31	100	4.56	14.71
12.00	12.00	7.38	100	4.63	15.01
12.25	12.25	7.46	100	4.71	15.31

Q		Inlet		Gutter	
Total	Captured	Depth	Efficiency	Depth	Spread
(cfs)	(cfs)	(in)	(%)	(in)	(ft)
12.50	12.50	7.53	100	4.78	15.61
12.75	12.75	7.60	100	4.85	15.90
13.00	13.00	7.67	100	4.92	16.19
13.25	13.25	7.74	100	4.99	16.48
13.50	13.50	7.81	100	5.06	16.77
13.75	13.75	7.88	100	5.13	17.06
14.00	14.00	7.94	100	5.19	17.34
14.25	14.25	8.01	100	5.26	17.63

Gutter	Bypass		
Velocity	Q	Spread	Depth
(ft/s)	(cfs)	(ft)	(in)
n/a	n/a	n/a	n/a
n/a	n/a	n/a	n/a
n/a	n/a	n/a	n/a
n/a	n/a	n/a	n/a
n/a	n/a	n/a	n/a
n/a	n/a	n/a	n/a
n/a	n/a	n/a	n/a
n/a	n/a	n/a	n/a
n/a	n/a	n/a	n/a
n/a	n/a	n/a	n/a
n/a	n/a	n/a	n/a
n/a	n/a	n/a	n/a
n/a	n/a	n/a	n/a
n/a	n/a	n/a	n/a
n/a	n/a	n/a	n/a
n/a	n/a	n/a	n/a
n/a	n/a	n/a	n/a
n/a	n/a	n/a	n/a
n/a	n/a	n/a	n/a
n/a	n/a	n/a	n/a
n/a	n/a	n/a	n/a
n/a	n/a	n/a	n/a
n/a	n/a	n/a	n/a
n/a	n/a	n/a	n/a
n/a	n/a	n/a	n/a
n/a	n/a	n/a	n/a
n/a	n/a	n/a	n/a
n/a	n/a	n/a	n/a
n/a	n/a	n/a	n/a
n/a	n/a	n/a	n/a
n/a	n/a	n/a	n/a
n/a	n/a	n/a	n/a
n/a	n/a	n/a	n/a
n/a	n/a	n/a	n/a
n/a	n/a	n/a	n/a
n/a	n/a	n/a	n/a
n/a	n/a	n/a	n/a
n/a	n/a	n/a	n/a
n/a	n/a	n/a	n/a
n/a	n/a	n/a	n/a
n/a	n/a	n/a	n/a
n/a	n/a	n/a	n/a
n/a	n/a	n/a	n/a
n/a	n/a	n/a	n/a
n/a	n/a	n/a	n/a
n/a	n/a	n/a	n/a
n/a	n/a	n/a	n/a
n/a	n/a	n/a	n/a
n/a	n/a	n/a	n/a
n/a	n/a	n/a	n/a

Gutter	Bypass		
Velocity	Q	Spread	Depth
(ft/s)	(cfs)	(ft)	(in)
n/a	n/a	n/a	n/a
n/a	n/a	n/a	n/a
n/a	n/a	n/a	n/a
n/a	n/a	n/a	n/a
n/a	n/a	n/a	n/a
n/a	n/a	n/a	n/a
n/a	n/a	n/a	n/a
n/a	n/a	n/a	n/a

Q		Inlet		Gutter			Bypass		
Total	Captured	Depth	Efficiency	Depth	Spread	Velocity	Q	Spread	Depth
(cfs)	(cfs)	(in)	(%)	(in)	(ft)	(ft/s)	(cfs)	(ft)	(in)
0.25	0.25	3.64	100	1.33	1.10	4.11	0.00	0.00	0.00
0.50	0.50	4.03	100	1.72	1.42	4.90	0.00	0.00	0.00
0.75	0.75	4.32	100	2.01	1.66	5.42	0.00	0.00	0.00
1.00	1.00	4.54	100	2.23	1.84	5.83	0.00	0.00	0.00
1.25	1.20	4.74	96	2.43	2.03	6.16	0.05	0.61	0.74
1.50	1.40	4.91	94	2.60	2.73	6.34	0.10	0.77	0.93
1.75	1.60	5.05	91	2.74	3.33	6.41	0.15	0.90	1.10
2.00	1.79	5.18	89	2.87	3.85	6.45	0.21	1.03	1.25
2.25	1.97	5.29	87	2.98	4.31	6.47	0.28	1.15	1.39
2.50	2.14	5.39	85	3.08	4.72	6.49	0.36	1.26	1.53
2.75	2.30	5.48	83	3.17	5.10	6.52	0.45	1.37	1.66
3.00	2.45	5.56	82	3.25	5.44	6.55	0.55	1.48	1.79
3.25	2.59	5.64	80	3.33	5.76	6.58	0.66	1.58	1.91
3.50	2.73	5.71	78	3.40	6.06	6.61	0.77	1.67	2.02
3.75	2.87	5.78	76	3.47	6.34	6.65	0.88	1.76	2.13
4.00	3.00	5.84	75	3.53	6.61	6.69	1.00	1.84	2.24
4.25	3.13	5.90	74	3.59	6.86	6.73	1.12	1.93	2.34
4.50	3.25	5.96	72	3.65	7.09	6.77	1.25	2.03	2.43
4.75	3.37	6.01	71	3.70	7.32	6.81	1.38	2.41	2.52

Inlet Report

Hydraflow Express Extension for Autodesk® AutoCAD® Civil 3D® by Autodesk, Inc. Thursday, Nov 14 2019

NMDOT Type 1-B On Grade 7.36% slope

Combination Inlet

Location	=	On grade
Curb Length (ft)	=	5.58
Throat Height (in)	=	5.06
Grate Area (sqft)	=	-0-
Grate Width (ft)	=	1.38
Grate Length (ft)	=	4.50

Gutter

Slope, Sw (ft/ft)	=	0.101
Slope, Sx (ft/ft)	=	0.020
Local Depr (in)	=	2.31
Gutter Width (ft)	=	2.00
Gutter Slope (%)	=	7.36
Gutter n-value	=	0.017

Calculations

Compute by:		Q vs Depth
Max Depth (in)	=	6

Highlighted

Q Total (cfs)	=	4.75
Q Capt (cfs)	=	3.37
Q Bypass (cfs)	=	1.38
Depth at Inlet (in)	=	6.01
Efficiency (%)	=	71
Gutter Spread (ft)	=	7.32
Gutter Vel (ft/s)	=	6.81
Bypass Spread (ft)	=	2.41
Bypass Depth (in)	=	2.52

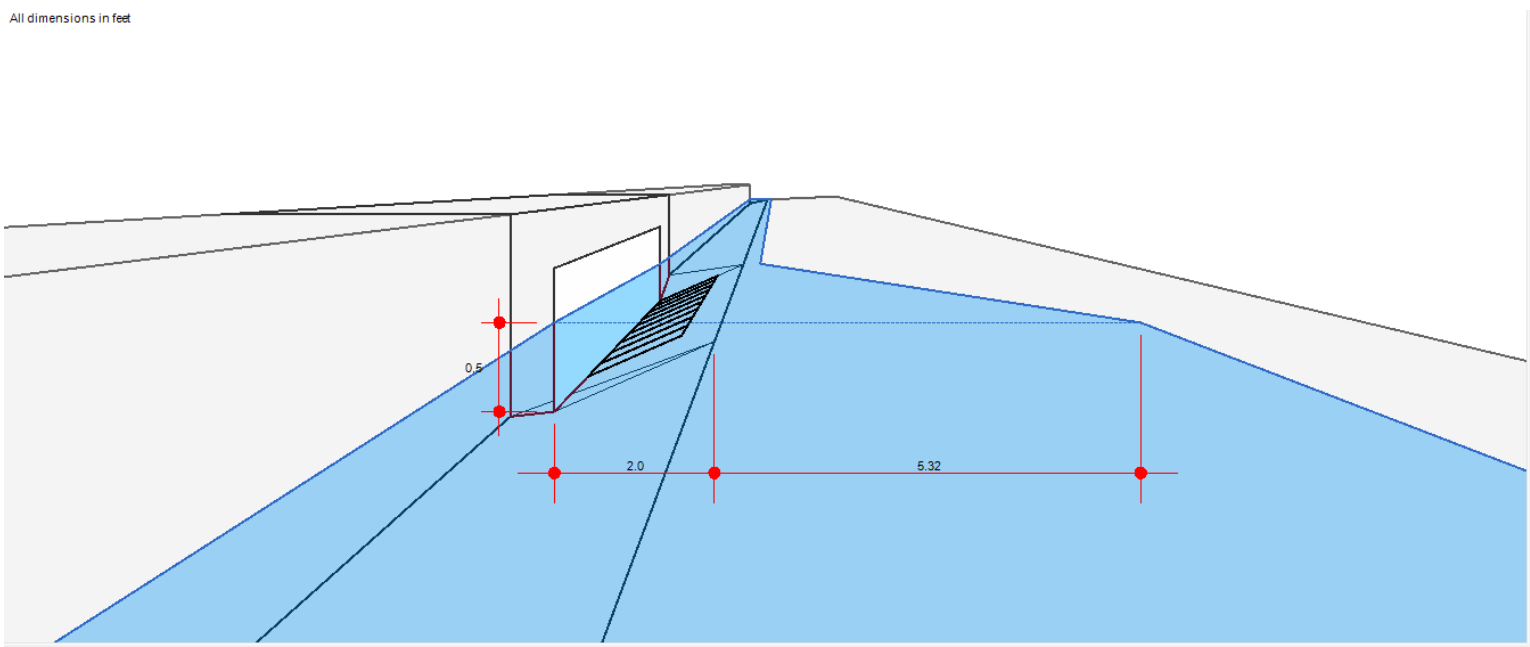

Q		Inlet		Gutter	
Total	Captured	Depth	Efficiency	Depth	Spread
(cfs)	(cfs)	(in)	(%)	(in)	(ft)
0.25	0.25	3.73	100	1.42	1.17
0.50	0.50	4.15	100	1.84	1.52
0.75	0.74	4.45	98	2.14	1.77
1.00	0.96	4.70	96	2.39	1.97
1.25	1.18	4.90	94	2.59	2.71
1.50	1.39	5.07	93	2.76	3.42
1.75	1.59	5.22	91	2.91	4.02
2.00	1.79	5.34	90	3.03	4.55
2.25	1.99	5.46	88	3.15	5.01
2.50	2.17	5.56	87	3.25	5.42
2.75	2.36	5.65	86	3.34	5.80
3.00	2.54	5.73	85	3.42	6.16
3.25	2.71	5.81	84	3.50	6.48
3.50	2.89	5.88	82	3.57	6.79
3.75	3.06	5.95	82	3.64	7.07
4.00	3.23	6.02	81	3.71	7.35
4.25	3.39	6.08	80	3.77	7.61
4.50	3.55	6.14	79	3.83	7.85
4.75	3.71	6.19	78	3.88	8.09
5.00	3.87	6.25	77	3.94	8.32
5.25	4.03	6.30	77	3.99	8.53
5.50	4.19	6.35	76	4.04	8.74
5.75	4.34	6.40	75	4.09	8.95
6.00	4.49	6.45	75	4.14	9.14
6.25	4.64	6.49	74	4.18	9.33
6.50	4.79	6.54	74	4.23	9.51
6.75	4.94	6.58	73	4.27	9.70
7.00	5.08	6.62	73	4.31	9.87
7.25	5.23	6.66	72	4.35	10.04
7.50	5.37	6.70	72	4.39	10.21
7.75	5.51	6.74	71	4.43	10.37
8.00	5.65	6.78	71	4.47	10.53
8.25	5.79	6.82	70	4.51	10.68
8.50	5.93	6.85	70	4.54	10.83
8.75	6.06	6.89	69	4.58	10.98
9.00	6.20	6.92	69	4.61	11.13
9.25	6.33	6.96	68	4.65	11.27
9.50	6.47	6.99	68	4.68	11.41
9.75	6.60	7.02	68	4.71	11.54

Gutter	Bypass		
Velocity	Q	Spread	Depth
(ft/s)	(cfs)	(ft)	(in)
3.60	0.00	0.00	0.00
4.29	0.00	0.17	0.20
4.74	0.01	0.40	0.49
5.10	0.04	0.59	0.71
5.31	0.07	0.73	0.89
5.38	0.11	0.86	1.04
5.41	0.16	0.98	1.19
5.43	0.21	1.09	1.32
5.45	0.26	1.20	1.45
5.48	0.33	1.30	1.57
5.51	0.39	1.39	1.68
5.55	0.46	1.48	1.79
5.59	0.54	1.56	1.89
5.62	0.61	1.64	1.99
5.67	0.69	1.72	2.08
5.70	0.77	1.79	2.17
5.74	0.86	1.86	2.26
5.78	0.95	1.93	2.34
5.82	1.04	2.00	2.42
5.86	1.13	2.30	2.50
5.90	1.22	2.62	2.57
5.94	1.31	2.91	2.64
5.98	1.41	3.18	2.71
6.02	1.51	3.45	2.77
6.05	1.61	3.70	2.83
6.09	1.71	3.93	2.89
6.13	1.81	4.17	2.94
6.16	1.92	4.38	3.00
6.20	2.02	4.59	3.05
6.23	2.13	4.80	3.09
6.27	2.24	5.00	3.14
6.30	2.35	5.18	3.19
6.33	2.46	5.36	3.23
6.37	2.57	5.54	3.27
6.40	2.69	5.71	3.31
6.43	2.80	5.88	3.35
6.46	2.92	6.04	3.39
6.49	3.03	6.20	3.43
6.53	3.15	6.36	3.47

Inlet Report

Hydraflow Express Extension for Autodesk® AutoCAD® Civil 3D® by Autodesk, Inc. Thursday, Nov 14 2019

NMDOT Combination Drop Inlet Type 2-B on Grade (5.16% slope)

Combination Inlet

Location	=	On grade
Curb Length (ft)	=	9.58
Throat Height (in)	=	5.06
Grate Area (sqft)	=	-0-
Grate Width (ft)	=	1.38
Grate Length (ft)	=	9.58

Gutter

Slope, Sw (ft/ft)	=	0.101
Slope, Sx (ft/ft)	=	0.020
Local Depr (in)	=	2.31
Gutter Width (ft)	=	2.00
Gutter Slope (%)	=	5.16
Gutter n-value	=	0.017

Calculations

Compute by:		Q vs Depth
Max Depth (in)	=	7

Highlighted

Q Total (cfs)	=	7.00
Q Capt (cfs)	=	5.08
Q Bypass (cfs)	=	1.92
Depth at Inlet (in)	=	6.62
Efficiency (%)	=	73
Gutter Spread (ft)	=	9.87
Gutter Vel (ft/s)	=	6.16
Bypass Spread (ft)	=	4.38
Bypass Depth (in)	=	3.00

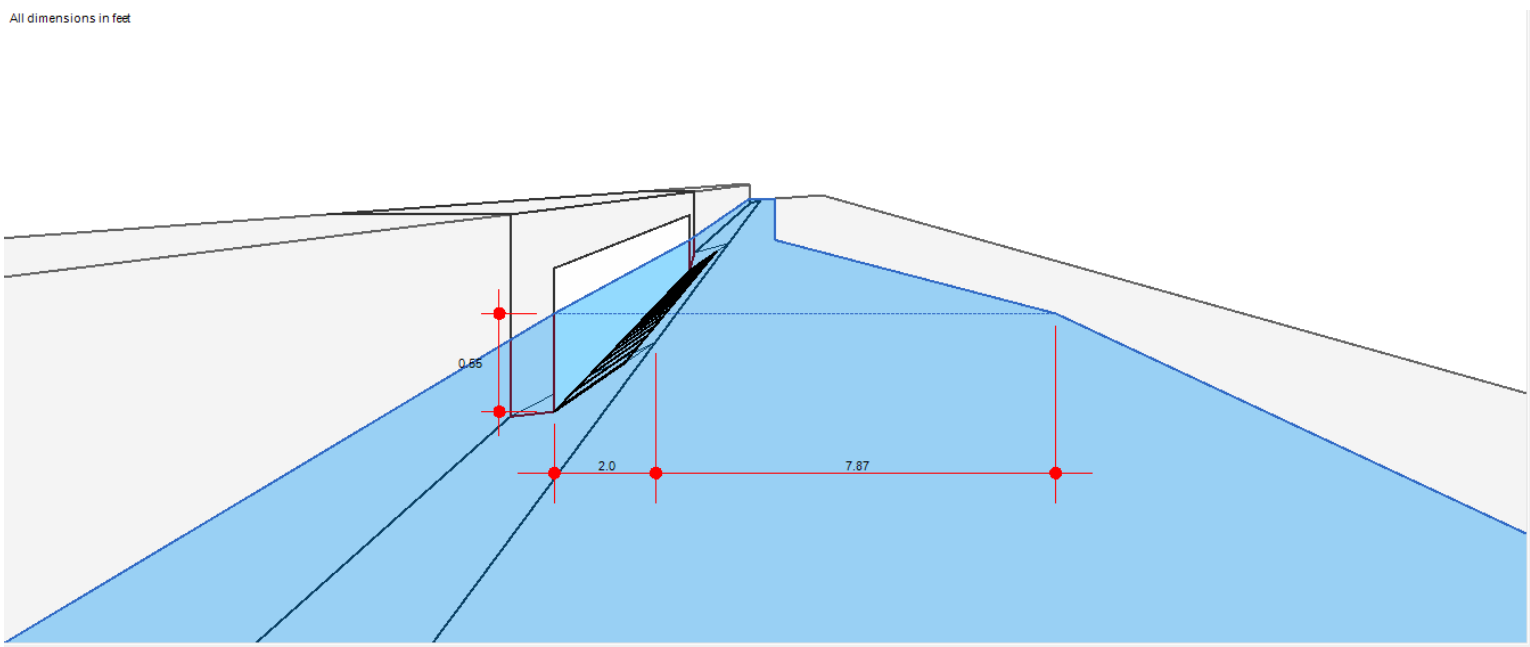

Q		Inlet		Gutter			Bypass		
Total	Captured	Depth	Efficiency	Depth	Spread	Velocity	Q	Spread	Depth
(cfs)	(cfs)	(in)	(%)	(in)	(ft)	(ft/s)	(cfs)	(ft)	(in)
0.25	0.25	3.69	100	1.38	1.14	3.81	0.00	0.00	0.00
0.50	0.50	4.10	100	1.79	1.48	4.54	0.00	0.00	0.00
0.75	0.75	4.39	100	2.08	1.72	5.02	0.00	0.00	0.00
1.00	1.00	4.63	100	2.32	1.92	5.39	0.00	0.00	0.00
1.25	1.19	4.83	95	2.52	2.42	5.67	0.06	0.67	0.81
1.50	1.39	5.00	93	2.69	3.13	5.78	0.11	0.83	1.01
1.75	1.59	5.15	91	2.84	3.73	5.81	0.16	0.97	1.18
2.00	1.77	5.27	89	2.96	4.25	5.84	0.23	1.10	1.34
2.25	1.94	5.38	86	3.07	4.71	5.86	0.31	1.23	1.49
2.50	2.11	5.48	84	3.17	5.13	5.89	0.39	1.35	1.64
2.75	2.26	5.57	82	3.26	5.50	5.92	0.49	1.46	1.77
3.00	2.41	5.66	80	3.35	5.85	5.95	0.59	1.57	1.90
3.25	2.55	5.73	79	3.42	6.17	5.99	0.70	1.67	2.03
3.50	2.69	5.81	77	3.50	6.48	6.02	0.81	1.77	2.14
3.75	2.82	5.88	75	3.57	6.76	6.06	0.93	1.86	2.26
4.00	2.95	5.94	74	3.63	7.03	6.10	1.05	1.95	2.36
4.25	3.08	6.00	72	3.69	7.28	6.14	1.17	2.17	2.46

Inlet Report

Hydraflow Express Extension for Autodesk® AutoCAD® Civil 3D® by Autodesk, Inc. Thursday, Nov 14 2019

NMDOT Type 1-B On Grade 6% slope

Combination Inlet

Location	=	On grade
Curb Length (ft)	=	5.58
Throat Height (in)	=	5.06
Grate Area (sqft)	=	-0-
Grate Width (ft)	=	1.38
Grate Length (ft)	=	4.50

Gutter

Slope, Sw (ft/ft)	=	0.101
Slope, Sx (ft/ft)	=	0.020
Local Depr (in)	=	2.31
Gutter Width (ft)	=	2.00
Gutter Slope (%)	=	6.00
Gutter n-value	=	0.017

Calculations

Compute by:		Q vs Depth
Max Depth (in)	=	6

Highlighted

Q Total (cfs)	=	4.00
Q Capt (cfs)	=	2.95
Q Bypass (cfs)	=	1.05
Depth at Inlet (in)	=	5.94
Efficiency (%)	=	74
Gutter Spread (ft)	=	7.03
Gutter Vel (ft/s)	=	6.10
Bypass Spread (ft)	=	1.95
Bypass Depth (in)	=	2.36

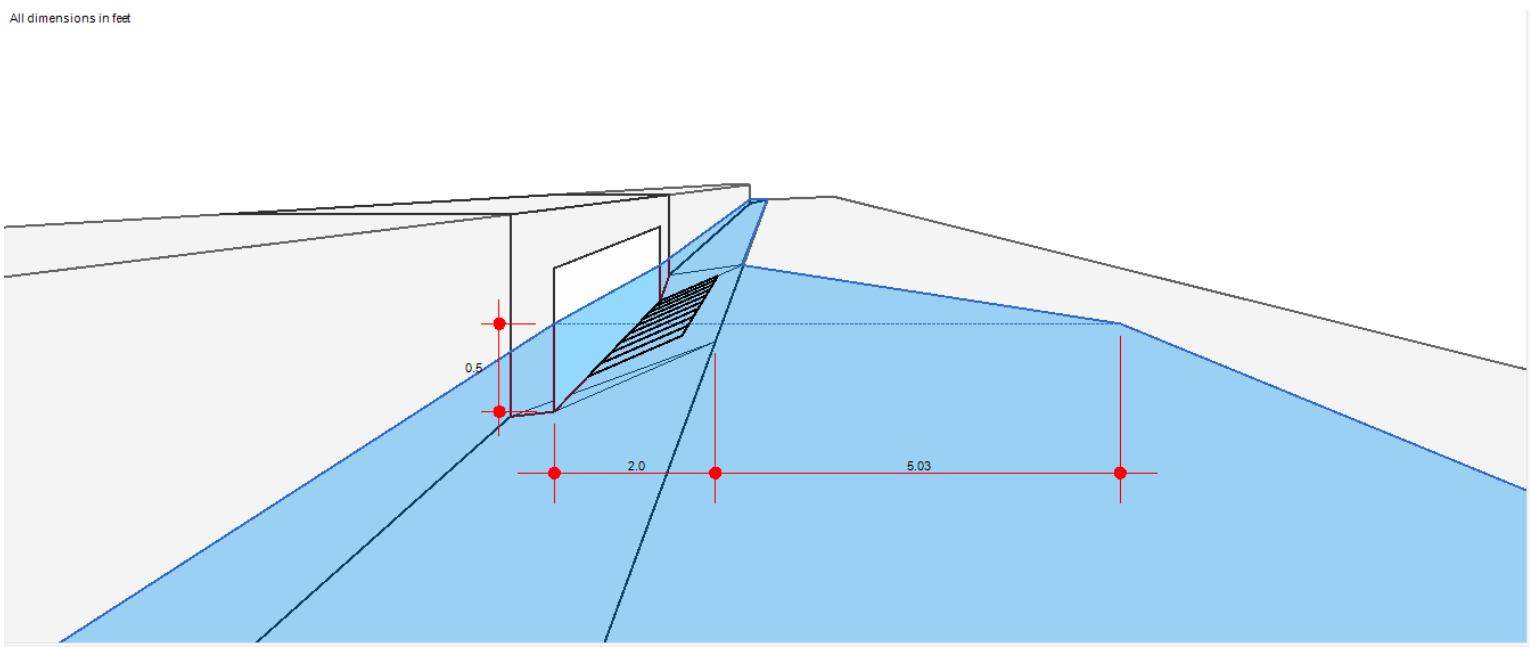

Inlet Report

Hydraflow Express Extension for Autodesk® AutoCAD® Civil 3D® by Autodesk, Inc. Thursday, Nov 14 2019

NMDOT Combination Drop Inlet Type 2-B sag

Combination Inlet

Location	=	Sag
Curb Length (ft)	=	9.58
Throat Height (in)	=	5.06
Grate Area (sqft)	=	13.22
Grate Width (ft)	=	1.38
Grate Length (ft)	=	9.58

Gutter

Slope, Sw (ft/ft)	=	0.101
Slope, Sx (ft/ft)	=	0.020
Local Depr (in)	=	2.31
Gutter Width (ft)	=	2.00
Gutter Slope (%)	=	-0-
Gutter n-value	=	-0-

Calculations

Compute by:		Q vs Depth
Max Depth (in)	=	7

Highlighted

Q Total (cfs)	=	9.00
Q Capt (cfs)	=	9.00
Q Bypass (cfs)	=	-0-
Depth at Inlet (in)	=	7.04
Efficiency (%)	=	100
Gutter Spread (ft)	=	11.62
Gutter Vel (ft/s)	=	6.53
Bypass Spread (ft)	=	-0-
Bypass Depth (in)	=	-0-

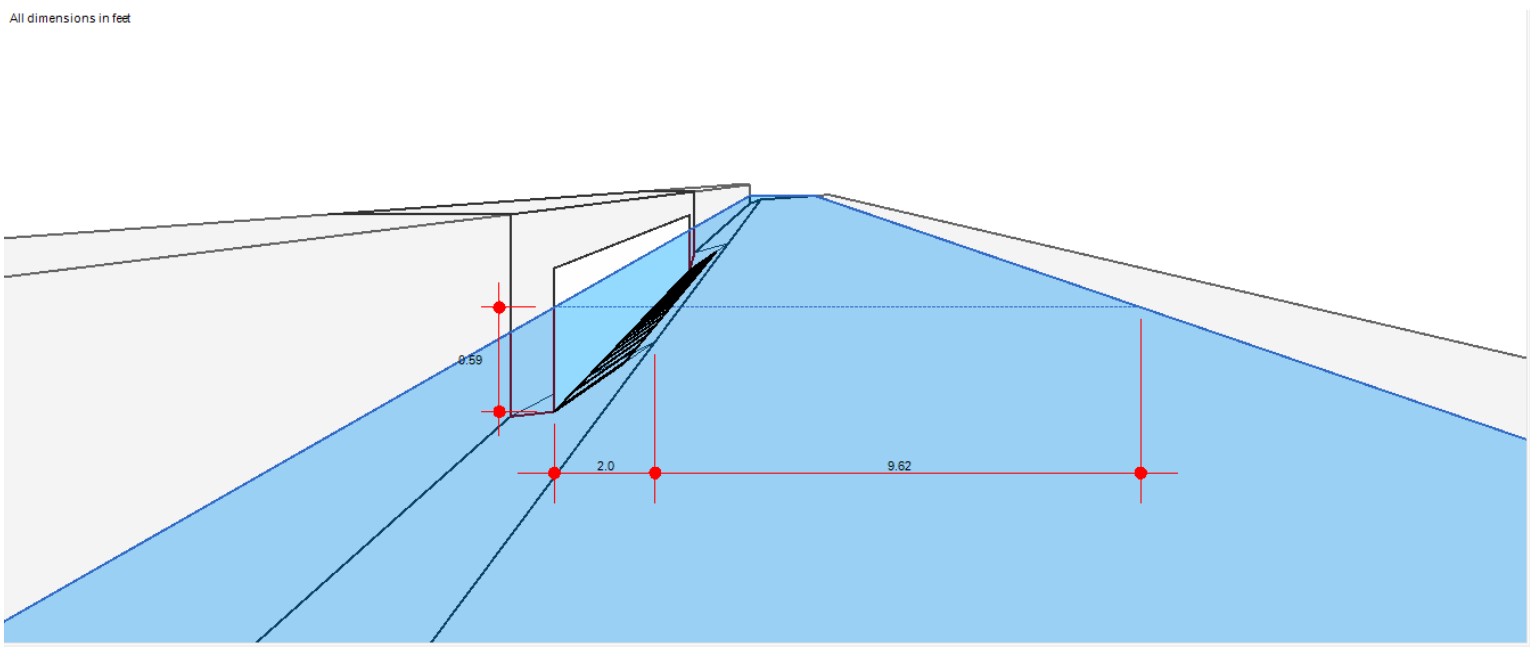

Q		Inlet		Gutter	
Total	Captured	Depth	Efficiency	Depth	Spread
(cfs)	(cfs)	(in)	(%)	(in)	(ft)
0.25	0.25	0.99	100	-1.32	0.42
0.50	0.50	1.54	100	-0.77	0.65
0.75	0.75	2.00	100	-0.31	0.84
1.00	1.00	2.39	100	0.08	1.01
1.25	1.25	2.75	100	0.44	1.16
1.50	1.50	3.08	100	0.77	1.30
1.75	1.75	3.27	100	0.96	1.38
2.00	2.00	3.43	100	1.12	1.45
2.25	2.25	3.71	100	1.40	1.57
2.50	2.50	3.98	100	1.67	1.68
2.75	2.75	4.24	100	1.93	1.79
3.00	3.00	4.50	100	2.19	1.90
3.25	3.25	4.74	100	2.43	2.02
3.50	3.50	4.86	100	2.55	2.52
3.75	3.75	4.97	100	2.66	3.00
4.00	4.00	5.09	100	2.78	3.48
4.25	4.25	5.20	100	2.89	3.95
4.50	4.50	5.31	100	3.00	4.41
4.75	4.75	5.42	100	3.11	4.86
5.00	5.00	5.53	100	3.22	5.30
5.25	5.25	5.63	100	3.32	5.74
5.50	5.50	5.73	100	3.42	6.17
5.75	5.75	5.83	100	3.52	6.59
6.00	6.00	5.93	100	3.62	7.00
6.25	6.25	6.03	100	3.72	7.41
6.50	6.50	6.13	100	3.82	7.82
6.75	6.75	6.23	100	3.92	8.22
7.00	7.00	6.32	100	4.01	8.61
7.25	7.25	6.41	100	4.10	9.00
7.50	7.50	6.51	100	4.20	9.39
7.75	7.75	6.60	100	4.29	9.77
8.00	8.00	6.69	100	4.38	10.15
8.25	8.25	6.78	100	4.47	10.52
8.50	8.50	6.87	100	4.56	10.89
8.75	8.75	6.95	100	4.64	11.25
9.00	9.00	7.04	100	4.73	11.62

Gutter	Bypass		
Velocity	Q	Spread	Depth
(ft/s)	(cfs)	(ft)	(in)
n/a	n/a	n/a	n/a
n/a	n/a	n/a	n/a
n/a	n/a	n/a	n/a
n/a	n/a	n/a	n/a
n/a	n/a	n/a	n/a
n/a	n/a	n/a	n/a
n/a	n/a	n/a	n/a
n/a	n/a	n/a	n/a
n/a	n/a	n/a	n/a
n/a	n/a	n/a	n/a
n/a	n/a	n/a	n/a
n/a	n/a	n/a	n/a
n/a	n/a	n/a	n/a
n/a	n/a	n/a	n/a
n/a	n/a	n/a	n/a
n/a	n/a	n/a	n/a
n/a	n/a	n/a	n/a
n/a	n/a	n/a	n/a
n/a	n/a	n/a	n/a
n/a	n/a	n/a	n/a
n/a	n/a	n/a	n/a
n/a	n/a	n/a	n/a
n/a	n/a	n/a	n/a
n/a	n/a	n/a	n/a
n/a	n/a	n/a	n/a
n/a	n/a	n/a	n/a
n/a	n/a	n/a	n/a
n/a	n/a	n/a	n/a
n/a	n/a	n/a	n/a
n/a	n/a	n/a	n/a
n/a	n/a	n/a	n/a
n/a	n/a	n/a	n/a
n/a	n/a	n/a	n/a
n/a	n/a	n/a	n/a
n/a	n/a	n/a	n/a
n/a	n/a	n/a	n/a