CITY OF ALBUQUERQUE
PUBLIC WORKS DEPARTMENT
PLANS FOR CONSTRUCTION

MECHEM STORM DRAIN AND DETENTION BASIN

VICINITY MAP

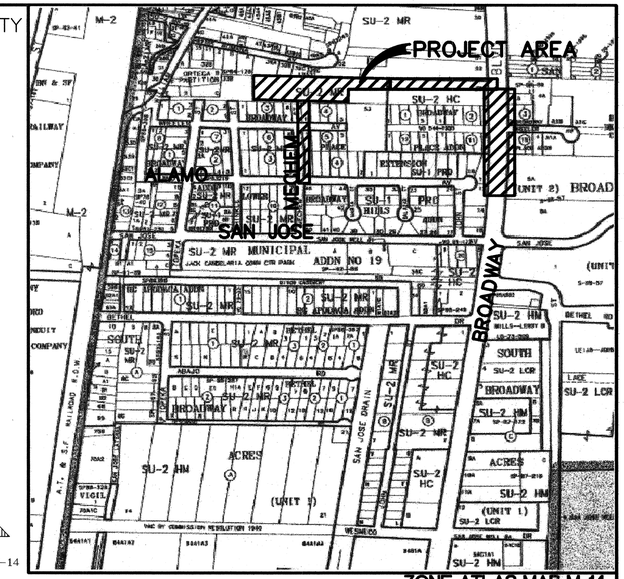

N

MAP NO. M-14

ZONE ATLAS MAP M-14

INDEX OF SHEETS

MECHEM DETENTION BASIN AND DETAILS (ADD) 11.1 OF 25

MECHEM DETENTION BASIN CMU WALL PLAN AND DETAILS 11A OF 25

RECORD DRAWINGS

I, David B. Thompson of the firm of Thompson Engineering Consultants, Inc., a Registered Professional Engineer in the State of New Mexico, do hereby state that to the best of my knowledge and belief, the infrastructure for this project as shown on the plans has been constructed in general accordance with the project plans and in general accordance with the City of Albuquerque Standard Specifications for Public Works Construction (Including all updates), and that the general intent of the plans has been met except as noted on the as-built construction drawings. The infrastructure construction has been observed by a qualified person from Smith Engineering Company, Inc. and this statement covers infrastructure installation that was observed while a representative from Smith Engineering Company, Inc. was on site. This statement is based on site observations by Smith Engineering Company, Inc. personnel and on as-built information provided to Smith Engineering Company, Inc. by Steve Toler of Surveying Control, Inc., NMPS number 11599.

9677 12-9-11

UTILITY COMPANY CONTACTS

PNM-ELECTRIC
JIM HALL
Project Manager
4201 Edith Blvd., NE
Albuquerque, New Mexico 87107
(505) 241-3581

AT&T
DAVID CROWEL
Resource Supervisor
111 Third ST., NW
Albuquerque, New Mexico 87103
(505) 842-2911

QWEST/US WEST
DAVID MULLER
Capacity Provisioning Specialist
400 Tijeras Ave. NW Suite 710
Albuquerque, New Mexico 87102
(505) 245-8706

XSPEDIUS
STEVE BENJAMIN
505 Marquette NE, Suite 1605
Albuquerque, New Mexico 87102
(505) 998-2220

MCI WORLDCOM
ANDY DARNELL
Operation Manager
6001 Midway Park, NE
Albuquerque, NM 87107
(505) 346-4470

TIME WARNER TELECOM
ROYAL HARRISON
Plant Manager
3830 Singer Blvd. NE, Suite 1000
Albuquerque, NM 87109
(505) 938-7339

PNM-GAS CO.
JEFF ROMANOWSKI
Project Engineer
4625 Edith Blvd., NE
Albuquerque, New Mexico 87107
(505) 241-7703

COMCAST CABLE
MIKE MORTUS
Construction Coordinator
4611 Montbel Pl., NE
Albuquerque, New Mexico 87107
(505) 761-6252

CITY OF ALBUQUERQUE (WATER & SEWER)
GREG OLSON
PWD/Utility Development
P.O. Box 1293
Albuquerque, New Mexico 87103
(505) 768-2719

McLeodUSA
RICK MUELLER
Supervisor of Outside Techs.
505 Marquette NE, Suite 1600
Albuquerque, New Mexico 87102
(505) 217-0048

GENUITY
JEFF KETTERER
SUPERVISER
OSP MAINTENANCE
175 North College Ave.
Indianapolis, IN 46202
(317) 633-5562

CityNet TELECOMMUNICATIONS
MONICO SALGADO
CONSULTANT
505 MARQUETTE AVE. N.W.
SUITE 119-A
ALBUQUERQUE, NEW MEXICO 87102
(505) 328-0848

CALL BEFORE YOU DIG!
STATEWIDE
1-800-321-ALERT
ALBUQUERQUE
260-1990

THOMPSON ENGINEERING CONSULTANTS
CIVIL ENGINEERING SERVICES
PHONE-(505)271-2199 FAX-(505)237-8422

Smith Engineering Company
A Full Service Engineering Company
6400 Tijeras Boulevard, N.E. Suite 500E Albuquerque, New Mexico 87110

REV.	SHEETS	CITY ENGINEER	DATE	USER DEPARTMENT	DATE	USER DEPARTMENT	DATE
A	11,20	for CE	10/15/03	John H. Austin	10/15/03		
B	4,5,6,11,20,21,22		9/22/03	Ken Hogan	9/22/03		

ENGINEERS STAMP & SIGNATURE

APPROVED	ENGINEER	DATE
DRC Chairman		9-12-03
Transportation		8-28-03
Water/Wastewater		8-28-03
Hydrology		9-11-03
C I P		
AMAFCA		
Constr. Coord.		8-28-03

APPROVED FOR CONSTRUCTION

CITY ENGINEER DATE 9/12/03

PROJECT NUMBER **682502**

DRAWING NO. 1 OF 25

Z:\PROJECTS\SOUTH BROADWAY (MECHAM)\PLANSET-95X\01-TITLE.DWG 8-27-03 10:40:27 am EST

GENERAL NOTES:

1 FIVE (5) WORKING DAYS PRIOR TO BEGINNING CONSTRUCTION, THE CONTRACTOR WILL SUBMIT A DETAILED CONSTRUCTION SCHEDULE TO THE CITY CONSTRUCTION COORDINATION DIVISION. TWO (2) DAYS PRIOR TO CONSTRUCTION, THE CONTRACTOR WILL OBTAIN A BARRICADING PERMIT FROM THE CONSTRUCTION COORDINATION DIVISION. CONTRACTOR SHALL NOTIFY BARRICADE ENGINEER (924-3400) PRIOR TO OCCUPYING AN INTERSECTION. REFER TO SECTION 19 OF SPECIFICATIONS.

2 THE CONTRACTOR WILL NOTIFY THE FIELD ENGINEER NOT LESS THAN SEVEN (7) DAYS PRIOR TO STARTING WORK, IN ORDER THAT THE CITY SURVEYOR MAY TAKE NECESSARY MEASURES TO INSURE THE PRESERVATION OF SURVEY MONUMENTS. THE CONTRACTOR WILL NOTIFY THE ENGINEER IF A MONUMENT IS DISTURBED. REPLACEMENT WILL BE DONE ONLY BY THE CITY SURVEY SECTION. WHEN A CHANGE IS MADE IN THE FINISHED ELEVATION OF THE PAVEMENT OF ANY ROADWAY IN WHICH A PERMANENT SURVEY MONUMENT IS LOCATED, CONTRACTOR WILL, AT HIS OWN EXPENSE, ADJUST THE MONUMENT COVER TO THE NEW GRADE UNLESS OTHERWISE SPECIFIED. REFER TO SECTION 4 OF SPECIFICATIONS.

3 THE SPECIFICATIONS USED FOR THIS PROJECT ARE THE CITY OF ALBUQUERQUE STANDARD SPECIFICATIONS FOR PUBLIC WORKS CONSTRUCTION, 1994 EDITION, UPDATE NO. 6.

4 ALL NEW MANHOLES SHALL BE TYPE "E" (COA DWG. 2102) UNLESS OTHERWISE NOTED ON THE PLANS.

5 THE CONTRACTOR WILL BE RESPONSIBLE FOR DISPOSING OF ALL DEBRIS, INCLUDING, BUT NOT LIMITED TO HAZARDOUS WASTE AT DISPOSAL SITES APPROVED BY GOVERNMENTAL AGENCIES REGULATING THE DISPOSAL OF SUCH MATERIALS.

6 ALL EXISTING WATER VALVE BOXES AND MANHOLES LOCATED WITHIN THE LIMITS OF CONSTRUCTION ARE TO BE ADJUSTED TO FINISH GRADE AND WILL BE MEASURED AND PAID PER EACH.

7 SUBGRADE PREPARATION UNDER SIDEWALKS AND DRIVE PADS, AND SUBGRADE AND SUBBASE PREPARATION UNDER CURB AND GUTTER IS CONSIDERED INCIDENTAL TO THE CONSTRUCTION OF SUCH, AND NO DIRECT PAYMENT SHALL BE MADE FOR THOSE ITEMS OF WORK.

8 THE WATER SYSTEMS DIVISION (857-8200) WILL BE NOTIFIED BY THE CONTRACTOR SEVEN (7) WORKING DAYS IN ADVANCE OF ANY WORK WHICH MAY AFFECT THE EXISTING PUBLIC WATER FACILITIES. REFER TO SECTION 18 OF SPECIFICATIONS.

9 ALL EXCAVATION TRENCHING AND SHORING ACTIVITIES MUST BE CARRIED OUT IN ACCORDANCE WITH OSHA 29 CFR 1926.650 SUBPART P.

10 ALL SIGNS AND CODING WILL BE IN ACCORDANCE WITH THE "MANUAL OF UNIFORM TRAFFIC CONTROL DEVICES FOR STREETS AND HIGHWAYS" CURRENT EDITION PUBLISHED BY THE U.S. DEPARTMENT OF TRANSPORTATION.

11 THE CONTRACTOR IS TO EXERCISE CARE TO AVOID DISTURBING ANY EXISTING UNDERGROUND UTILITIES. IT WILL BE HIS RESPONSIBILITY TO COORDINATE WITH THE UTILITY COMPANIES IN ORDER TO PREVENT ANY SERVICE DISRUPTION. SEE SECTION 18 "UTILITIES", CITY OF ALBUQUERQUE, STANDARD SPECIFICATIONS FOR CONTRACTOR REQUIREMENTS.

12 WHEN ABUTTING NEW PAVEMENT TO EXISTING INTERSECTING STREETS, SAW CUT EXISTING PAVEMENT TO A STRAIGHT LINE AND AT RIGHT ANGLES AND REMOVE ANY BROKEN OR CRACKED PAVEMENT. NO DIRECT PAYMENT WILL BE MADE FOR SAW CUTTING.

13 ALL GAS VALVES, GAS MANHOLES, ELECTRICAL MANHOLES, TELEPHONE MANHOLES, AND UTILITY POLES WILL BE ADJUSTED TO GRADE BY EACH UTILITY COMPANY.

14 WHEN REMOVAL OF EXISTING CURB AND GUTTER OR SIDEWALK IS REQUIRED, REMOVE BACK TO NEAREST SUITABLE JOINT UNLESS OTHERWISE DIRECTED BY THE FIELD ENGINEER.

15 THE CONTRACTOR WILL NOTIFY NEW MEXICO ONE CALL SYSTEM 260-1990 TWO (2) WORKING DAYS PRIOR TO COMMENCING WORK IN NEW AREAS.

16 CONTRACTOR WILL MAKE ALL WATER VALVES AND MANHOLES ACCESSIBLE TO THE CITY AT ALL TIMES.

17 CONTRACTOR WILL PLACE BITUMINOUS MATERIAL WITH THE USE OF A LAYDOWN MACHINE WHERE PAVEMENT IS 8 FEET IN WIDTH OR WIDER.

18 ALL SUBGRADE AND SUBBASE MATERIAL ENCOUNTERED IN PAVEMENT REMOVAL AND REPLACEMENT THAT IS DETERMINED BY THE FIELD ENGINEER TO MEET THE SPECIFICATIONS, CAN BE REUSED. HOWEVER, THE MATERIAL WILL BE PROCESSED AND COMPACTED TO MEET MOISTURE CONTENT AND PERCENT COMPACTION REQUIRED BY THE SPECIFICATIONS.

19 CONTRACTOR WILL NOT PAVE OVER ANY SURFACE FEATURE, I.E., GAS VALVE, MANHOLE COVER, ETC. WITHOUT PRIOR APPROVAL FROM THE CITY FIELD ENGINEER.

20 CONTRACTOR WILL CONFINE HIS WORK WITHIN THE EASEMENT LIMITS AND/OR RIGHT-OF-WAY, OR PROVIDE COPIES OF AGREEMENTS WITH ADJACENT LANDOWNERS TO THE CITY OF ALBUQUERQUE.

21 ALL WATER VALVES AND FIRE HYDRANTS REMOVED TO BE SALVAGED AND RETURNED TO THE C.O.A.

22 MINIMUM BOTTOM WIDTH OF TRENCHES FOR RIGID PIPE SHALL BE EQUAL TO THE OUTSIDE DIAMETER PLUS 18 INCHES. BEDDING MATERIAL SHALL BE CLASS II, III, OR IV UNLESS OTHERWISE SPECIFICALLY NOTED ON THE PLANS.

23 MINIMUM BOTTOM WIDTH OF TRENCHES FOR NON-RIGID PIPE SHALL BE EQUAL TO THE OUTSIDE DIAMETER PLUS 12 INCHES. BEDDING MATERIAL SHALL BE CLASS I, II, OR III.

24 THE CONTRACTOR AGREES TO TAKE NECESSARY SAFETY PRECAUTIONS AS REQUIRED BY FEDERAL, STATE AND LOCAL AUTHORITIES TO PROTECT PEDESTRIAN AND VEHICULAR TRAFFIC IN THE CONSTRUCTION AREA, WHICH INCLUDE BUT ARE NOT LIMITED TO: MAINTAINING ADEQUATE WARNING SIGNS, BARRICADES, LIGHTS, GUARD FENCES, WALKS AND BRIDGES.

25 ALL STRUCTURAL CONCRETE TO BE 4000 PSI UNLESS OTHERWISE NOTED ON PLANS.

26 ALL REINFORCING STEEL TO BE GRADE 60.

27 ALL EXPOSED EDGES ON CAST-IN-PLACE CONCRETE STRUCTURES WILL HAVE A 1" CHAMFER UNLESS OTHERWISE NOTED.

28 ALL SPLICES IN REINFORCING STEEL TO BE 2-FOOT 6-INCH MINIMUM UNLESS OTHERWISE NOTED.

29 PRIOR TO CONSTRUCTION, THE CONTRACTOR WILL EXCAVATE AND VERIFY THE HORIZONTAL AND VERTICAL LOCATIONS OF ALL POTENTIAL CONFLICTING UTILITIES. SHOULD A CONFLICT EXIST BETWEEN THE FIELD INFORMATION AND THE PLANS, THE CONTRACTOR WILL NOTIFY THE CITY FIELD ENGINEER SO THE CONFLICT CAN BE RESOLVED WITH MINIMUM AMOUNT OF DELAY.

30 THE REPLACEMENT OF THE EXISTING UTILITIES AND THE INSTALLATION OF NEW UTILITY LINES WILL BE COMPLETED IN ADVANCE OF STARTING THE PAVEMENT WORK. TEMPORARY PAVEMENT WILL BE PLACED IN ALL TRENCHES REQUIRED FOR THE UTILITY REPLACEMENTS IN THOSE AREAS THAT MUST MAINTAIN TRAFFIC UNTIL THE FINAL PAVEMENT WORK STARTS IN EACH AREA. TEMPORARY STRIPING SHALL BE THE CONTRACTOR'S RESPONSIBILITY. MAINTENANCE OF THE TEMPORARY PAVING AND STRIPING WILL BE AT THE CONTRACTOR'S EXPENSE.

31 TACK COAT FOR SURFACE COURSE REQUIREMENTS WILL BE DETERMINED BY THE FIELD ENGINEER.

32 THE CONTRACTOR WILL CONTACT THE CITY OF ALBUQUERQUE TRAFFIC DIVISION 764-1599, ONE (1) WEEK IN ADVANCE OF ANY CHANGES REQUIRED IN THE TRAFFIC SIGNALIZATION OF THIS PROJECT. ALL WORK ASSOCIATED WITH NEW TRAFFIC SIGNALIZATION SHALL BE THE RESPONSIBILITY OF THE CONTRACTOR.

33 ALL NEW STREET PAVING, DRIVEWAYS, SIDEWALKS, AND CURB AND GUTTERS, ABUTTING EXISTING AREAS SHALL MATCH THE ELEVATION OF THOSE AREAS.

34 PERMANENT PAVEMENT STRIPING AND MARKINGS WILL BE PLACED BY THE CONTRACTOR. ROAD SHALL NOT BE OPENED TO TRAFFIC UNTIL IT IS STRIPED. ALL STRIPING, PAVEMENT MARKINGS INCLUDING CROSSWALKS, ARROWS AND LINE MARKINGS ARE TO BE CONSTRUCTED OF HOT PLASTIC OR COLD PLASTIC IN ACCORDANCE WITH THE MANUAL OF UNIFORM TRAFFIC CONTROL DEVICES.

35 ALL EXCAVATED MATERIAL THAT IS NOT REQUIRED TO BE REUSED MUST BE REMOVED FROM THE PROJECT AREA WITHIN FOUR DAYS OF EXCAVATION. SPOIL PILES WILL BE ALLOWED ONLY AS DIRECTED BY THE CITY FIELD ENGINEER.

36 THE CONTRACTOR WILL COORDINATE THE CONSTRUCTION ACTIVITIES WITH ALL OTHER CONTRACTORS AND UTILITY COMPANIES WORKING IN THE SAME AREA. THE CONTRACTOR MAY BE REQUIRED TO RESCHEDULE THEIR ACTIVITIES TO ALLOW UTILITY CREWS TO PERFORM THEIR REQUIRED WORK. NO ADDITIONAL COMPENSATION WILL BE ALLOWED FOR DELAYS OR INCONVENIENCE CAUSED BY UTILITY COMPANY WORK CREWS. A CONTRACT EXTENSION MAY BE ALLOWED AS DELINEATED IN CITY OF ALBUQUERQUE STANDARD SPECIFICATIONS.

37 ALL CONSTRUCTION EASEMENTS ON PRIVATE PROPERTY WILL BE OBTAINED BY THE CONTRACTOR PRIOR TO THE BEGINNING OF CONSTRUCTION.

38 EXISTING MEDIAN CURB AND GUTTER AND STANDARD CURB AND GUTTER, NOT DISTURBED BY CONTRACTOR, BUT OUT OF ALIGNMENT, DISPLACED VERTICALLY, BADLY BROKEN AND/OR DETERIORATED, WILL BE REPLACED AS DIRECTED BY THE FIELD ENGINEER AND PAID FOR AT CONTRACT UNIT PRICES.

39 ALL TRAFFIC CONTROL DEVICES REQUIRED FOR DRIVEWAY CLOSURES, UTILITY CONSTRUCTION OR FOR OTHER REASONS AND NOT SHOWN ON THE SIGNING PLANS WILL BE FURNISHED BY THE CONTRACTOR AND WILL BE PAID AS SPECIFIED IN THE TECHNICAL SPECIFICATIONS AND BID PROPOSAL. PRIOR TO PLACING THE TRAFFIC CONTROL DEVICES, THE CONTRACTOR WILL NOTIFY THE AFFECTED OWNERS IN ACCORDANCE WITH THE SPECIFICATIONS. CONTRACTOR MUST MAKE PROVISIONS TO PROVIDE ACCESS TO PROPERTIES. REFER TO SECTION 19 OF THE SPECIFICATIONS.

40 ALL UTILITY LINES WHICH ARE NOT SPECIFICALLY DESIGNATED TO BE REMOVED AND REPLACED ON THE PLANS, WILL BE MAINTAINED IN SERVICE. SHORING, SHEETING AND OTHER MEANS OF SUPPORT SHALL BE EMPLOYED BY THE CONTRACTOR TO PREVENT DAMAGE OR LOSS OF THESE EXISTING UTILITIES. BEAM AND CABLE OR OTHER ADEQUATE SUPPORTS WILL BE USED FOR TEMPORARY SUPPORT OF ALL UTILITY LINES WHICH CROSS THE TRENCH. ANY DAMAGE TO EXISTING UTILITIES WILL PROMPTLY BE REPAIRED AT THE CONTRACTOR'S EXPENSE. THE CONTRACTOR WILL NOTIFY THE ENGINEER IMMEDIATELY OF ANY SIGNIFICANT DEVIATION OF EXPOSED UTILITIES FROM THE LOCATIONS SHOWN ON THE PLANS SO THAT CONFLICTS CAN BE RESOLVED IN A TIMELY MANNER.

41 THE CONTRACTOR WILL ASSUME RESPONSIBILITY FOR ANY DAMAGE TO EXISTING COA INFRASTRUCTURE (C & G, PAVING, ETC.) DURING CONSTRUCTION, APART FROM THOSE SECTIONS INDICATED FOR REMOVAL ON THE PLANS, AND WILL REPAIR OR REPLACE SAME AT HIS OWN EXPENSE. HE WILL SUITABLY PROTECT THE CURB AND GUTTER FROM INCIDENTAL SPLASHING DURING THE TACK COAT APPLICATION AND WILL BE RESPONSIBLE FOR CLEANING SAME AT HIS OWN COST SHOULD SPLASHING OCCUR.

42 ALL INTERFERING PORTIONS OF ABANDONED UTILITY LINES WHICH ARE EXPOSED AS A RESULT OF CONSTRUCTION WILL BE REMOVED AND DISPOSED OF BY THE CONTRACTOR.

43 STATIONS OF STORM DRAIN INLETS ARE TO THE CENTER OF GRATE. ALL STORM DRAIN INLETS WILL BE TYPE "A" UNLESS OTHERWISE NOTED ON THE PLANS.

44 SHORING COSTS WILL BE CONSIDERED INCIDENTAL TO THE TRENCH AND BACKFILL COSTS.

45 THE CONTRACTOR WILL BE RESPONSIBLE FOR SECURING NPDES PERMITS REQUIRED BY APPLICABLE CITY, STATE, AND FEDERAL REGULATIONS.

46 ALL STORM DRAIN AND CONNECTOR PIPE WILL BE CLASS V REINFORCED CONCRETE PIPE UNLESS OTHERWISE NOTED ON THE PLANS.

47 THE TERM REMOVE USED IN THIS PLAN SET INCLUDES THE DISPOSAL OF SAID MATERIAL IN ACCORDANCE WITH CITY OF ALBUQUERQUE SPECIFICATIONS, LATEST EDITION.

48 CONTRACTOR WILL SURVEY AND LOG EXISTING ELEVATIONS OF CURB-AND-GUTTER, SIDEWALK, AND PAVEMENT WHICH WILL BE REMOVED FOR CONSTRUCTION OF IMPROVEMENTS. CONTRACTOR WILL REPLACE REMOVED CURB-AND-GUTTER, SIDEWALK, DRIVE PADS, AND PAVEMENT TO ELEVATIONS PRIOR TO REMOVAL UNLESS OTHERWISE INDICATED ON THE PLANS.

49 CONTRACTOR WILL CONSTRUCT TEMPORARY ASPHALT PAVEMENT AS DIRECTED BY THE FIELD ENGINEER TO PROVIDE ACCESS TO LOCAL BUSINESS, ETC. TEMPORARY PAVEMENT SHALL BE REMOVED AND DISPOSED OF PRIOR TO PLACEMENT OF FULL WIDTH PAVEMENT SECTION. TEMPORARY PAVING SHALL BE PER COA STD. DWG. 2415 AND PAID FOR PER COA STD. SPECIFICATIONS.

50 ALL CLASSES OF SEEDING SHALL BE DRY LAND MIX PLACED AT 1.5 LBS/1000 S.F. WITH FERTILIZER 21-12-12 PLACED AT 5 LBS/1000 S.F.

51 ALL ASPHALTIC CONCRETE SHALL BE MINIMUM 1800 LB. STABILITY AND COMPACTED TO 95% MODIFIED MARSHALL DENSITY UNLESS OTHERWISE NOTED ON THE PLANS.

52 ALL RIP-RAP MATERIAL USED ON THIS PROJECT SHALL BE A NATURAL ROCK MATERIAL CONFORMING TO THE SIZE AND MATERIAL PROPERTY REQUIREMENTS SET FORTH IN THE COA STANDARD SPECIFICATIONS. NO BROKEN CONCRETE OR RUBBLE WILL BE ACCEPTED. SECTION 109.

53 CONTRACTOR SHALL MAINTAIN A GRAFFITI-FREE SITE. CONTRACTOR SHALL PROMPTLY REMOVE ANY AND ALL GRAFFITI FROM EQUIPMENT, WHETHER PERMANENT OR TEMPORARY.

54 ALL STRIPING ON C.O.A STREETS REMOVED OR DAMAGE MUST BE REPLACED WITH PLASTIC. STRIPING ERADICATION SHALL BE ACCOMPLISHED BY WATER BLASTING OR SURFACE PLANNING OF THE ROADWAY TO A MAXIMUM DEPTH OF 0.25 INCHES (MAXIMUM) AND FOR A WIDTH EQUAL TO TWO TIMES THE WIDTH OF THE STRIPE OR MARKING TO BE REMOVED.

55 FOR STORM DRAIN CONSTRUCTION, RCP PIPE JOINTS SHALL NOT BE GROUTED PRIOR TO FINAL INSPECTION. FINAL INSPECTION WILL DETERMINE JOINTS TO BE GROUTED FOR FINAL ACCEPTANCE OF THE CONSTRUCTION.

56 ALL DISTURBED GROUND AREAS SHALL BE REVEGETATED IN ACCORDANCE WITH CITY OF ALBUQUERQUE STANDARD SPECIFICATIONS FOR PUBLIC WORKS CONSTRUCTION, SECTION 1012 NATIVE GRASS SEEDING, AS CURRENTLY UPDATED.

57 ALL MEDIAN PAVEMENT USED ON THIS PROJECT SHALL BE "RED BRICK PATTERENED CONCRETE".

LEGEND:

- CONTROL POINT
- FIRE HYDRANT
- GAS METER
- GUY ANCHOR
- LIGHT POLE
- POWER POLE
- TELEPHONE PEDESTAL
- SANITARY SEWER MANHOLE
- SIGN (SINGLE or TWO-POST)
- 65.2 SPOT ELEVATION
- STORM DRAIN MANHOLE
- STORM DRAIN DROP INLET
- W WATERLINE SCRIBE ON CURB
- WATER METER
- WATER VALVE
- EXISTING GAS
- EXISTING WATERLINE
- EXISTING SANITARY SEWER
- EXISTING CURB & GUTTER
- EXISTING STORM DRAIN
- PROPOSED VALVE
- PROPOSED FITTING
- PROPOSED SINGLE "A" INLET
- PROPOSED DOUBLE "C" INLET
- PROPOSED MAJOR CONTOURS
- PROPOSED MINOR CONTOURS
- REMOVE & REPLACE PAVEMENT PER COA STD DWG 2465
- PROPOSED MANHOLES SEE PLANSET FOR SIZE & TYPE
- PROPOSED RCP STORM DRAIN

AS BUILT INFORMATION

CONTRACTOR	
WORK STAKED BY	DATE
INSPECTOR ACCEPTANCE BY	DATE
FIELD VERIFICATION BY	DATE
DRAWINGS CORRECTED BY	DATE
MICRO-FILM INFORMATION	
RECORDED BY	DATE
NO.	

BENCH MARKS

ACS BRASS TABLET STAMPED "5-M14 1974"
LOCATED AT THE INTERSECTION OF BROADWAY BLVD. AND WOODWARD AVE.
X= 381,544.83
Y= 1,473,267.10
G-G = 0.9996800 ΔX = 00° 13' 38"
(NAD 1927/SLD 1929)
ELEVATION = 4937.592

SURVEY INFORMATION

NO.	FIELD NOTES BY	DATE

ENGINEERS SEAL

8-26-03

NO.	DATE	REMARKS	BY

REVISIONS

		DATE
DESIGNED BY	DBT	09/05/03
DRAWN BY	BLN	09/05/03
CHECKED BY	DBT	09/05/03

THOMPSON ENGINEERING CONSULTANTS
CIVIL ENGINEERING SERVICES
PHONE-(505)271-2199 FAX-(505)237-8422

Smith Engineering Company
A Full Service Engineering Company
5600 Uptown Boulevard, N.E. Suite 500E Albuquerque, New Mexico 87110

CITY OF ALBUQUERQUE
PUBLIC WORKS DEPARTMENT
ENGINEERING DEVELOPMENT GROUP

TITLE: MECHEM STORM DRAIN AND DETENTION BASIN
GENERAL NOTES AND LEGEND

Design Review Committee	City Engineer Approval	Last Design Update	Mo. / Day / Yr.	Mo. / Day / Yr.
APPROVED SEP 12 2003 DESIGN REVIEW COMMITTEE	APPROVED SEP 12 2003 CITY ENGINEER			

City Project No.	Zone Map No.	Sheet No.	Drawing No.
682502	M-14		2 of 25

Z:\PROJECTS\SOUTH BROADWAY (MECHAM)\PLANSET-95%\02-GEN.DWG 9-5-03 10:55:13 am EST

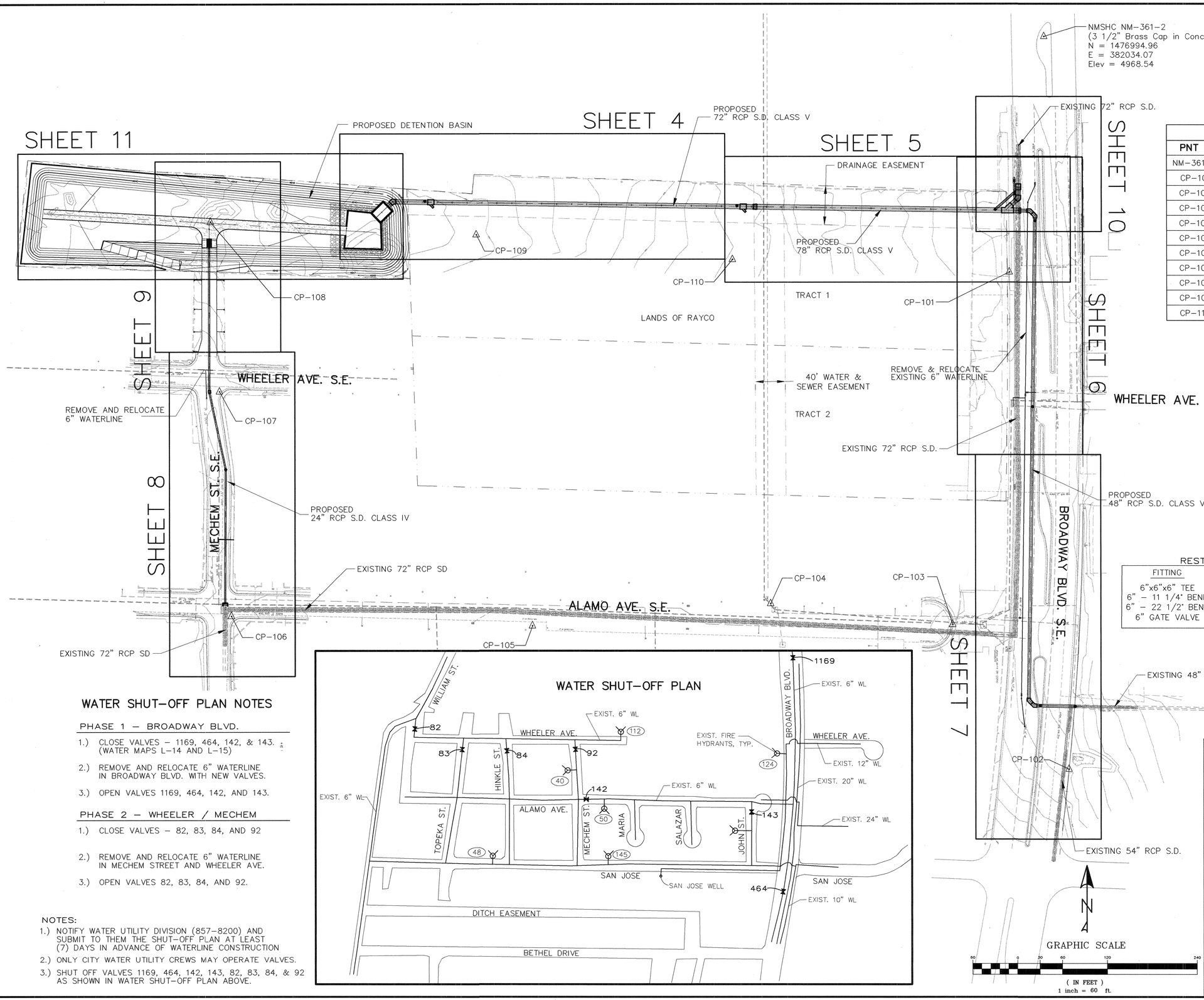

CONTROL INFORMATION			
PNT #	NORTHING	EASTING	ELEVATION
NM-361-2	1476994.96	382034.07	4968.54
CP-101	1476678.86	381987.30	4966.19
CP-102	1476013.94	382066.44	4966.14
CP-103	1476208.33	381910.98	4962.75
CP-104	1476235.74	381667.58	4957.72
CP-105	1476206.69	381349.26	4948.85
CP-106	1476219.31	380946.82	4941.51
CP-107	1476519.90	380931.26	4942.78
CP-108	1476746.55	382919.51	4946.81
CP-109	1476729.27	381274.77	4949.71
CP-110	1476695.71	381617.25	4957.13

RESTRAINED JOINT TABLE

FITTING	RESTRAINED LENGTH
6"x6"x6" TEE	RESTRAIN BRANCH AT FITTING ONLY
6" – 11 1/4° BEND	20'
6" – 22 1/2° BEND	20'
6" GATE VALVE	45'

WATER SHUT-OFF PLAN NOTES

PHASE 1 – BROADWAY BLVD.

1.) CLOSE VALVES – 1169, 464, 142, & 143. (WATER MAPS L-14 AND L-15)

2.) REMOVE AND RELOCATE 6" WATERLINE IN BROADWAY BLVD. WITH NEW VALVES.

3.) OPEN VALVES 1169, 464, 142, AND 143.

PHASE 2 – WHEELER / MECHEM

1.) CLOSE VALVES – 82, 83, 84, AND 92

2.) REMOVE AND RELOCATE 6" WATERLINE IN MECHEM STREET AND WHEELER AVE.

3.) OPEN VALVES 82, 83, 84, AND 92.

NOTES:

1.) NOTIFY WATER UTILITY DIVISION (857-8200) AND SUBMIT TO THEM THE SHUT-OFF PLAN AT LEAST (7) DAYS IN ADVANCE OF WATERLINE CONSTRUCTION

2.) ONLY CITY WATER UTILITY CREWS MAY OPERATE VALVES.

3.) SHUT OFF VALVES 1169, 464, 142, 143, 82, 83, 84, & 92 AS SHOWN IN WATER SHUT-OFF PLAN ABOVE.

Z:\PROJECTS\SOUTH BROADWAY (MECHAM)\PLANSET-95%\03-FIVEPLAN.DWG 8-27-03 10:56:59 am EST

AS BUILT INFORMATION
CONTRACTOR
WORK STAKED BY DATE
INSPECTOR'S ACCEPTANCE BY DATE
FIELD VERIFICATION BY DATE
DRAWINGS CORRECTED BY DATE
MICRO-FILM INFORMATION
RECORDED BY DATE
NO.

BENCH MARKS
ACS BRASS TABLET STAMPED "5-M14 1974"
LOCATED AT THE INTERSECTION OF
BROADWAY BLVD. AND WOODWARD AVE.
X= 381,544.83
Y= 1,473,267.10
G-G = 0.9996800 ΔX = 00° 13' 38"
(NAD 1927/SLD 1929)
ELEVATION = 4937.592 (NGVD 1929)

SURVEY INFORMATION
FIELD NOTES

NO.	BY	DATE

ENGINEERS SEAL

NO.	DATE	REMARKS	BY
		REVISIONS	

DESIGNED BY DBT DATE 08/27/03
DRAWN BY DS DATE 08/27/03
CHECKED BY DBT DATE 08/27/03

THOMPSON ENGINEERING CONSULTANTS
CIVIL ENGINEERING SERVICES
PHONE-(505)271-2199 FAX-(505)237-8422

Smith Engineering Company
A Full Service Engineering Company
6400 Uptown Boulevard, N.E. Suite 500E Albuquerque, New Mexico 87110

CITY OF ALBUQUERQUE
PUBLIC WORKS DEPARTMENT
ENGINEERING DEVELOPMENT GROUP

TITLE: MECHEM STORM DRAIN AND DETENTION BASIN
PROJECT LOCATION MAP AND WATER SHUT-OFF PLAN

Design Review Committee: APPROVED SEP 12 2003 DESIGN REVIEW COMMITTEE
City Engineer Approval: APPROVED SEP 12 2003 CITY E
Last Design Update | No. / Day / Yr. | No. / Day / Yr.

City Project No. 682502 | Zone Map No. M-14 | Sheet No. | Drawing No. 3 of 25

M14M02-MechemPond-D
AS-BUILT DIA: 72"

M14M03-M14M02-D
AS-BUILT DIA: 72"

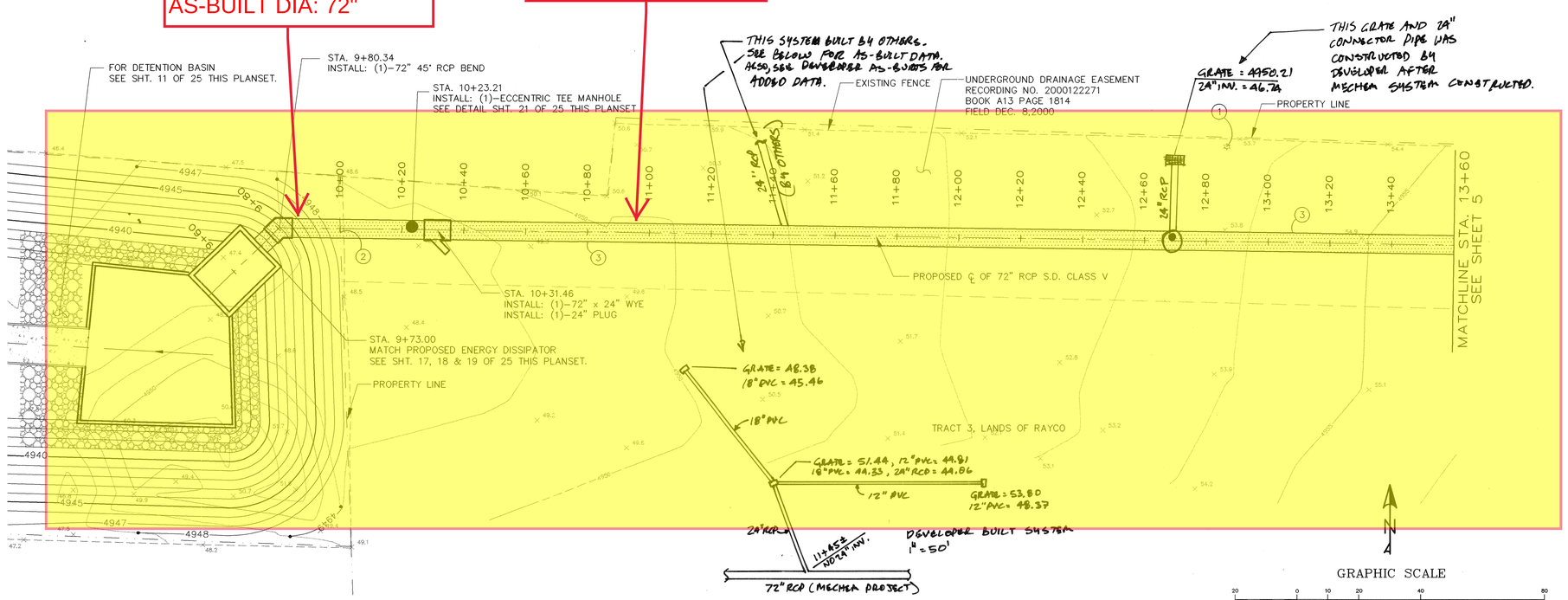

TRACT 1 EASEMENT STA. 9+72.10 TO 13+60

NOTE:
Q_{100}, V_{100} & HGL INFORMATION PROVIDED BY
CITY OF ALBUQUERQUE HYDROLOGY SECTION

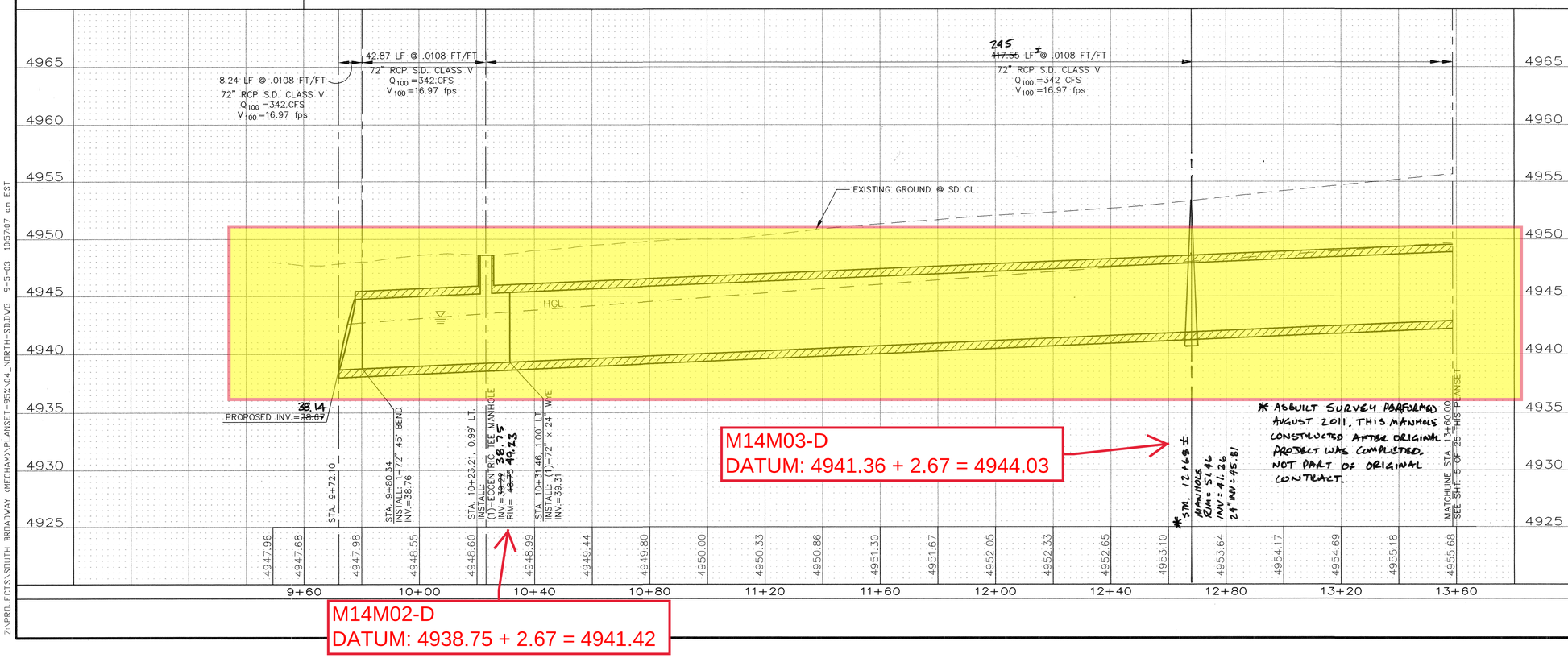

KEYED NOTES

1. CONTRACTOR TO PROTECT AND SUPPORT EXISTING POWER POLE. CONTRACTOR TO COORDINATE WITH PNM FOR POWER POLE SUPPORT AND INSULATING GUARDS ON POWER LINES.
2. CONTRACTOR TO REMOVE AND REPLACE 35 FEET OF CORRUGATED METAL FENCING WITH 6' HIGH CHAIN LINK FENCE.
3. CONTRACTOR TO PLACE LEAN FILL TO SPRINGLINE OF 72" RCP. SEE DETAIL THIS SHEET.

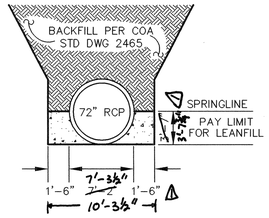

72" RCP INSTALLATION
PAY LIMIT FOR LEAN FILL

⚠ PAY LIMIT FOR LEAN FILL PER LINEAL FOOT OF 72" RCP PLACED = 0.62 CY/LF

AS BUILT INFORMATION

CONTRACTOR — DATE
WORK STAKED BY — DATE
INSPECTOR'S ACCEPTANCE BY — DATE
FIELD VERIFICATION BY — DATE
DRAWINGS CORRECTED BY — DATE
MICRO-FILM INFORMATION
RECORDED BY — DATE
NO.

BENCH MARKS

ACS BRASS TABLET STAMPED "5-M14 1974"
LOCATED AT THE INTERSECTION OF
BROADWAY BLVD. AND WOODWARD AVE.
X= 381,544.83
Y= 1,473,267.10
G-G = 0.9996800 ΔX = 00° 13' 38"
(NAD 1927/SLD 1929)
ELEVATION = 4937.592

SURVEY INFORMATION

FIELD NOTES

NO.	BY	DATE

ENGINEERS SEAL

NO.	DATE	REMARKS	BY
1	9-22-03	QUANTITY PAY LIMIT FOR LEAN FILL	DBT

REVISIONS

DESIGN		DATE
DESIGNED BY	DBT	09/05/03
DRAWN BY	BLN	09/05/03
CHECKED BY	DBT	09/05/03

THOMPSON ENGINEERING CONSULTANTS
CIVIL ENGINEERING SERVICES
PHONE-(505)271-2199 FAX-(505)237-8422

Smith Engineering Company
A Full Service Engineering Company
6400 Uptown Boulevard, N.E. Suite 500E Albuquerque, New Mexico 87110

CITY OF ALBUQUERQUE
PUBLIC WORKS DEPARTMENT
ENGINEERING DEVELOPMENT GROUP

TITLE: MECHEM STORM DRAIN AND DETENTION BASIN
UTILITY PLAN AND PROFILE TRACT 1 EASEMENT STA. 9+49.20 TO 13+60

Design Review Committee: APPROVED SEP 1 2 2003 DESIGN REVIEW COMMITTEE
City Engineer Approval: APPROVED SEP 1 2 2003 CITY E
Last Design Update — Mo. / Day / Yr. — Mo. / Day / Yr.

City Project No. 682502 | Zone Map No. M-14 | Sheet No. | Drawing No. 4 of 25

Z:\PROJECTS\SOUTH BROADWAY (MECHAM)\PLANSET-95%\04_NORTH-SD.DWG 9-5-03 10:57:07 am EST

M14M04-M14M03-D
AS-BUILT DIA: 72"

M14M05-M14M04-D
AS-BUILT DIA: 78"

M14MO6-M14M05-D
AS-BUILT DIA: 30"

M14061-M14MY1-D
AS-BUILT DIA: 72"

NOTE:
SEE SHEET 10 FOR LARGE SCALE DIAGRAM OF 78"x72" WYE AND APPURTENANCES

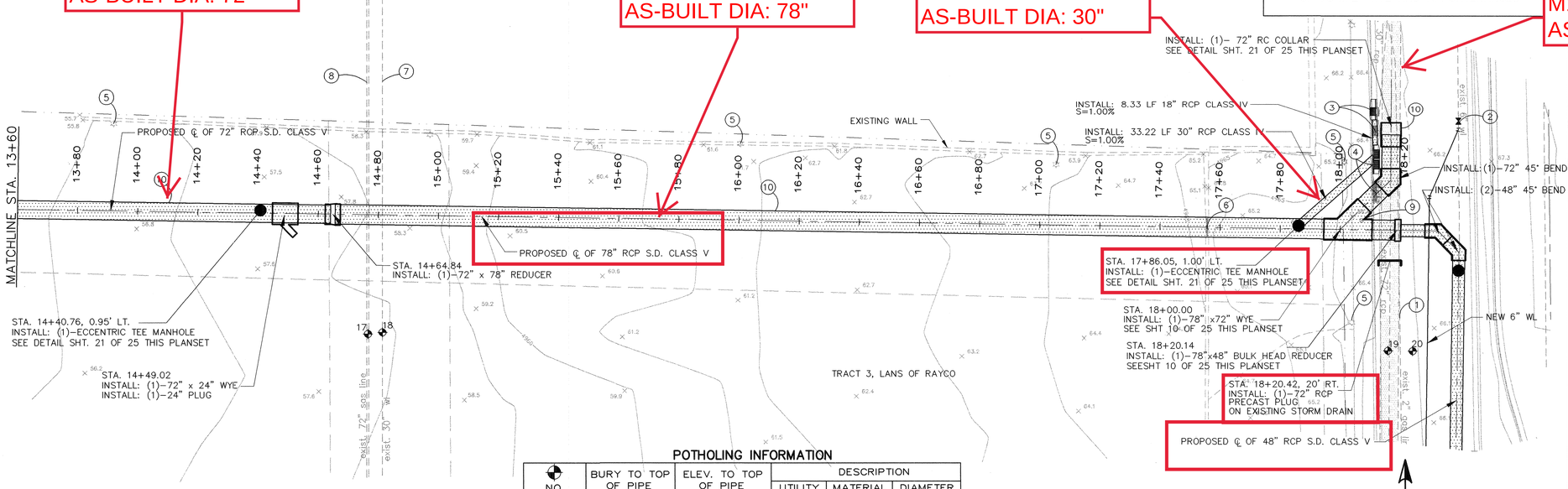

POTHOLING INFORMATION

NO.	BURY TO TOP OF PIPE	ELEV. TO TOP OF PIPE	DESCRIPTION		
			UTILITY	MATERIAL	DIAMETER
17	15'-6"	42.60±	SAS	CONCRETE	72"
18	3'-9"	54.80±	WATER	CONCRETE	30"
19	15'-2"	51.38±	SD	CONCRETE	72"
20	10'-0"	NO LOCATE	WATER	N/A	

TRACT 1 EASEMENT STA. 13+60 TO BROADWAY BLVD.

NOTE:
Q_{100}, V_{100} & HGL INFORMATION PROVIDED BY CITY OF ALBUQUERQUE HYDROLOGY SECTION

KEYED NOTES

1. EXISTING 2" GAS LINE TO BE REMOVED AND RELOCATED BY PNM
2. ...TS. 6 & 7 ...SPOSE,
   TOG= ~~63.57~~ 65.24 INV.= ~~61.56~~ 61.52
4. CONTRACTOR TO REMOVE AND DISPOSE, BUILD NEW TYPE C STORM INLET
   TOG= ~~65.27~~ 65.27 INV.= ~~61.35~~ 61.43
5. CONTRACTOR TO PROTECT AND SUPPORT EXISTING POWERPOLE. CONTRACTOR TO COORDINATE WITH PNM FOR POWER POLE SUPPORT AND FOR INSULATING GUARDS ON POWER LINES.
6. CONTRACTOR TO REMOVE AND DISPOSE 65 FEET OF CHAINLINK FENCE AND CONCRETE TEE PANEL FENCING, AND REPLACE WITH 6' HIGH CHAINLINK FENCE.
7. CONTRACTOR TO PROTECT 30" WATERLINE
8. CONTRACTOR TO PROTECT 72" SANITARY SEWER LINE
9. CONTRACTOR TO REMOVE AND RELOCATE EXISTING WATER METER
10. CONTRACTOR TO PLACE LEAN FILL TO SPRINGLINE OF 72" RCP AND 78" RCP. SEE DETAILS SHEETS 4 & 5.

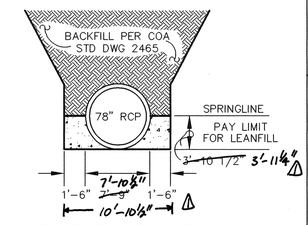

78" RCP INSTALLATION
PAY LIMIT FOR LEAN FILL

⚠ PAY LIMIT FOR LEAN FILL PER LINEAL FOOT OF 78" RCP PLACED = 0.69 CY/LF

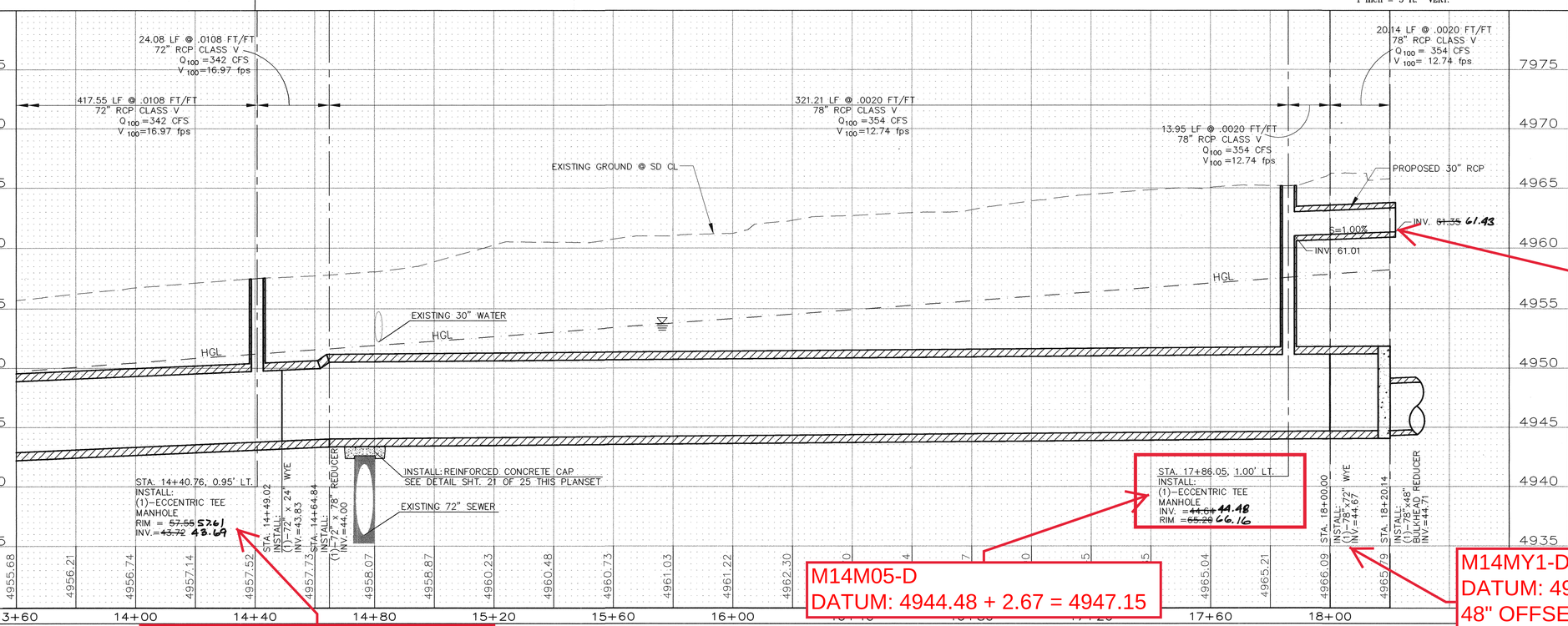

M14MO6 (DROP INLET)-D
DATUM: 4961.43+ 2.67 = 4964.10
OFFSET (OUT) = 16.95FT

M14M05-D
DATUM: 4944.48 + 2.67 = 4947.15

M14M04-D
DATUM: 4943.69 + 2.67 = 4946.36

M14MY1-D
DATUM: 4944.67 + 2.67 = 4947.34
48" OFFSET (OUT) =
4944.71-4944.67=0.05FT.

THOMPSON ENGINEERING CONSULTANTS
CIVIL ENGINEERING SERVICES
PHONE-(505)271-2199 FAX-(505)237-8422

Smith Engineering Company
A Full Service Engineering Company
6400 Uptown Boulevard, N.E. Suite 500E Albuquerque, New Mexico 87110

CITY OF ALBUQUERQUE
PUBLIC WORKS DEPARTMENT
ENGINEERING DEVELOPMENT GROUP

TITLE: MECHEM STORM DRAIN AND DETENTION BASIN
UTILITY PLAN AND PROFILE TRACT 1 EASEMENT STA. 13+60 TO BROADWAY BLVD.

AS BUILT INFORMATION
CONTRACTOR
WORK STAKED BY / DATE
INSPECTOR ACCEPTANCE BY / DATE
FIELD VERIFICATION BY / DATE
DRAWINGS CORRECTED BY / DATE
MICRO-FILM INFORMATION
RECORDED BY / DATE
NO.

BENCH MARKS
ACS BRASS TABLET STAMPED "5-M14 1974"
LOCATED AT THE INTERSECTION OF BROADWAY BLVD. AND WOODWARD AVE.
X= 381,544.83
Y= 1,473,267.10
G-G = 0.9996800 ΔX = 00° 13' 38"
(NAD 1927/SLD 1929)
ELEVATION = 4937.592

SURVEY INFORMATION
FIELD NOTES
NO. | BY | DATE

ENGINEERS SEAL

NO.	DATE	REMARKS	BY
1	9-3-03	QUANTITY PAY LIMIT FOR LEAN FILL DET	DBT

REVISIONS

DESIGN		
DESIGNED BY	DBT	DATE 09/05/03
DRAWN BY	BLN	DATE 09/05/03
CHECKED BY	DBT	DATE 09/05/03

Last Design Update: Mo. / Day / Yr. | Mo. / Day / Yr.

Drawing No. 5 of 25

Z:\PROJECTS\SOUTH BROADWAY (MECHAM)\PLANSET-95%\05 NORTH SD.DWG 9-4-03 2:42:10 pm EST

M14M08-M14MY1-D
AS-BUILT DIA: 48"

M14M09-M14M08-D
AS-BUILT DIA: 48"

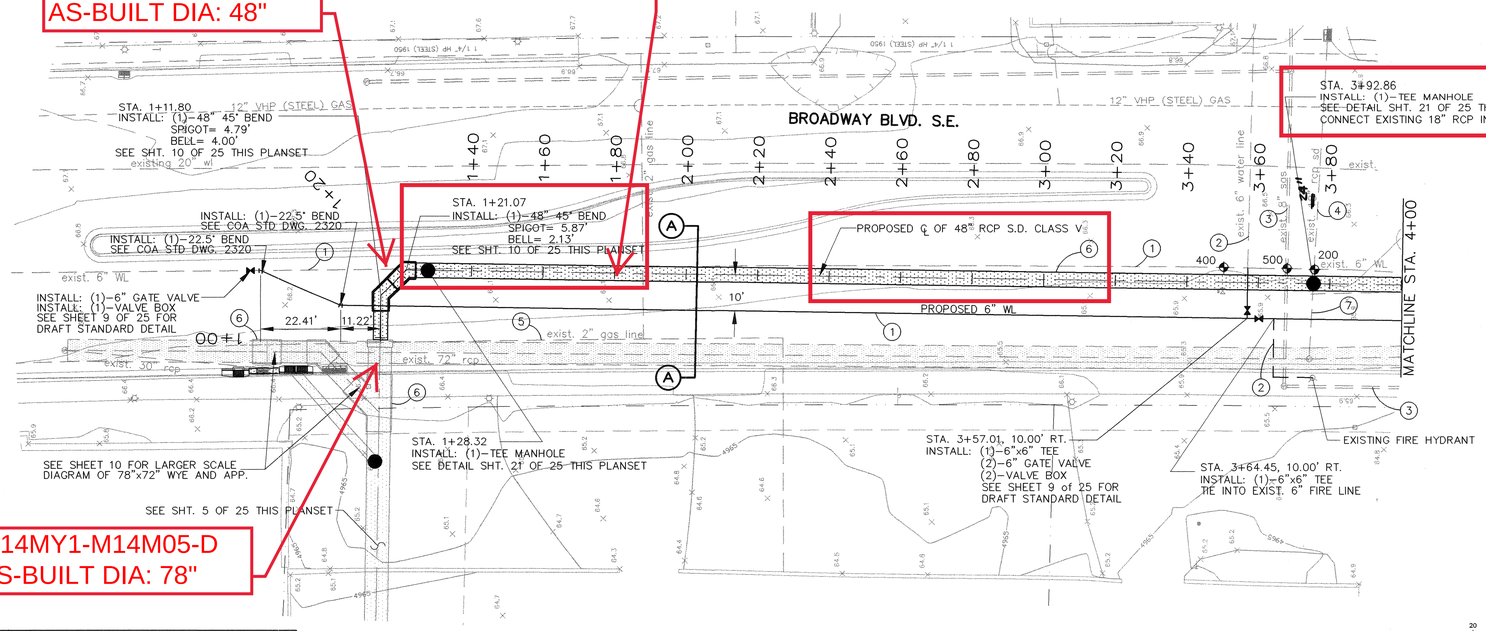

M14MY1-M14M05-D
AS-BUILT DIA: 78"

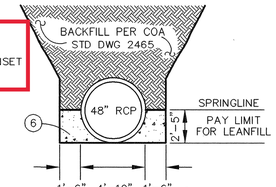

48" RCP INSTALLATION
PAY LIMIT FOR LEAN FILL

⚠ PAY LIMIT FOR LEAN FILL PER LINEAL FOOT OF 48" RCP PLACED = 0.36 CY/LF

KEYED NOTES

1. CONTRACTOR TO REMOVE AND DISPOSE EXISTING 6" WATERLINE. INSTALL NEW 6" WATERLINE AS SHOWN.
2. CONNECT EXISTING 6" WATERLINE INTO NEW 6" WATERLINE.
3. CONTRACTOR TO PROTECT EXISTING 8" SANITARY SEWER LINES.
4. CONTRACTOR TO CONNECT EXISTING ~~18"~~ 24" RCP SD INTO 6' DIA. TYPE "E" MANHOLE.
5. EXISTING 2" GAS LINE TO BE REMOVED AND RELOCATED BY PNM.
6. CONTRACTOR TO PLACE LEAN FILL TO SPRINGLINE OF 48" RCP, 72" RCP, & 78" RCP SEE DETAIL SHEETS 4, 5, & 6.
7. CONTRACTOR TO REMOVE AND DISPOSE 18" RCP AND INSTALL PREFABRICATED RC PLUG

POTHOLING INFORMATION

NO.	BURY TO TOP OF PIPE	ELEV. TO TOP OF PIPE	DESCRIPTION		
			UTILITY	MATERIAL	DIAMETER
200	8'-6"	57.50±	SD	CONCRETE	24"
400	4'-4"	61.77±	WATER	METALLIC	6"
500	6'-10"	59.18±	SAS	PVC	8"

GRAPHIC SCALE
20 0 10 20 40 80
(IN FEET)
1 inch = 20 ft. HORZ.
1 inch = 5 ft. VERT.

NOTE:
Q_{100}, V_{100} & HGL INFORMATION PROVIDED BY CITY OF ALBUQUERQUE HYDROLOGY SECTION

BROADWAY BLVD. - STA. 1+00 TO STA. 4+00

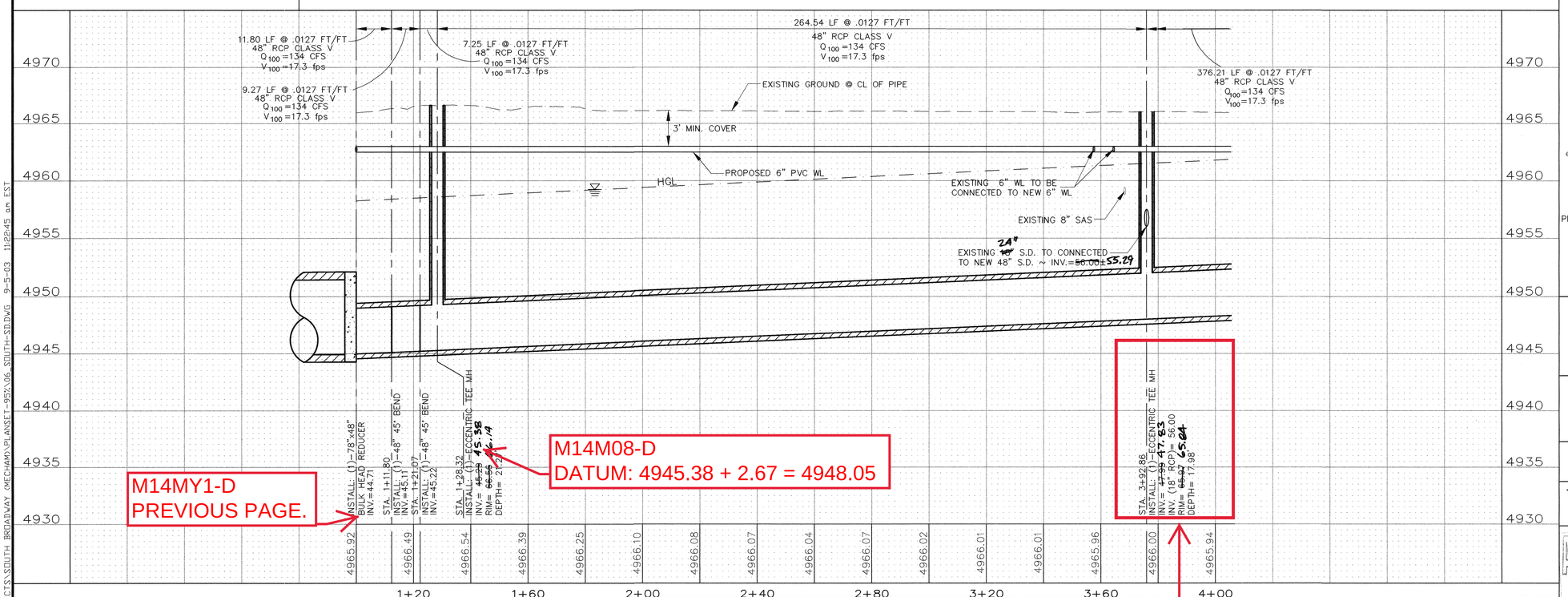

M14M08-D
DATUM: 4945.38 + 2.67 = 4948.05

M14MY1-D
PREVIOUS PAGE.

M14M09-D
DATUM: 4947.83 + 2.67 = 4950.5

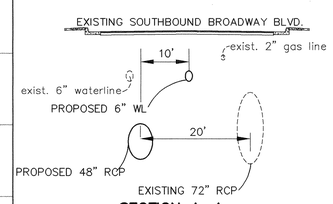

SECTION A-A

NOTE: DISTANCES SHOWN ARE HORIZONTAL DISTANCES FOR VERTICAL DISTANCES REFER TO PROFILE THIS SHT.

THOMPSON ENGINEERING CONSULTANTS
CIVIL ENGINEERING SERVICES
PHONE-(505)271-2199 FAX-(505)237-8422

Smith Engineering Company
A Full Service Engineering Company
6400 Uptown Boulevard, N.E. Suite 500E Albuquerque, New Mexico 87110

CITY OF ALBUQUERQUE
PUBLIC WORKS DEPARTMENT
ENGINEERING DEVELOPMENT GROUP

TITLE: MECHEM STORM DRAIN AND DETENTION BASIN UTILITY PLAN AND PROFILE BROADWAY BLVD.

Design Review Committee	City Engineer Approval	Last Design Update	Mo. / Day / Yr.	Mo. / Day / Yr.
APPROVED SEP 12 2003 DESIGN REVIEW COMMITTEE	APPROVED SEP 12 2003 CITY			

City Project No.	Zone Map No.	Sheet No.	Drawing No.
682502	M-14		6 of 25

AS BUILT INFORMATION
CONTRACTOR
WORK STAKED BY — DATE
WORK INSPECTED BY — DATE
ACCEPTANCE BY — DATE
FIELD VERIFICATION BY — DATE
DRAWINGS CORRECTED BY — DATE
MICRO-FILM INFORMATION
RECORDED BY — DATE
NO.

BENCH MARKS
ACS BRASS TABLET STAMPED "5-M14 1974"
LOCATED AT THE INTERSECTION OF BROADWAY BLVD. AND WOODWARD AVE.
X= 381,544.83
Y= 1,473,267.10
G-G = 0.9996800 ΔX = 00° 13' 38"
(NAD 1927/SLD 1929)
ELEVATION = 4937.592

SURVEY INFORMATION
FIELD NOTES
NO. | BY | DATE

ENGINEERS SEAL

NO.	DATE	REMARKS	BY
1	7-22-03	MODIFIED PAY LIMIT FOR LEAN FILL	DBT

REVISIONS

DESIGN		DATE
DESIGNED BY	DBT	08/27/03
DRAWN BY	DS	08/27/03
CHECKED BY	DBT	08/27/03

Z:\PROJECTS\SOUTH BROADWAY (MECHAM)\PLANSET-95X\06 SOUTH-SD.DWG 9-5-03 11:28:45 am EST

M14M10-M14M09-D
AS-BUILT DIA: 48"

M14M11-M14M10-D
AS-BUILT DIA: 48"

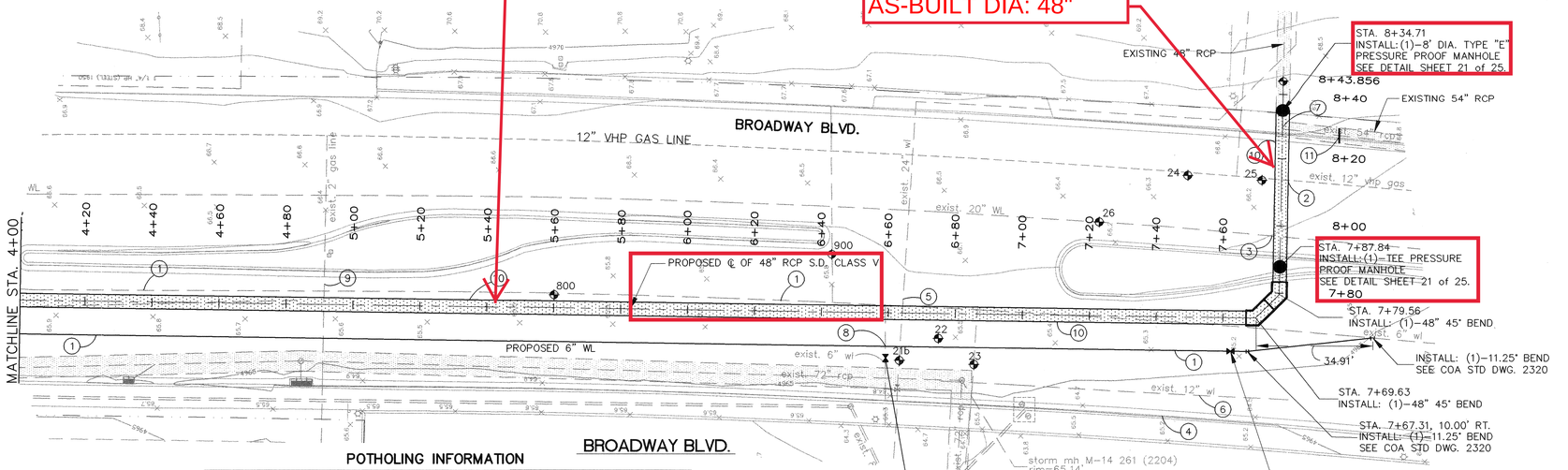

BROADWAY BLVD.

POTHOLING INFORMATION

NO.	BURY TO TOP OF PIPE	ELEV. TO TOP OF PIPE	DESCRIPTION		
			UTILITY	MATERIAL	DIAMETER
16	8'-7"	58.52±	SD	CONCRETE	48"
21a	3'-2"	61.53±	WATER	METAL	6"
21b	4'-2"	60.53±	SD	CONCRETE	30"
22	10'-0"	55.60±	WATER	METAL	6"
23	4'-4 1/2"	60.88±	SD	CONCRETE	30"
24	5'-6"	60.70±	GAS	STEEL	12"
25	6'-2"	59.93±	GAS	STEEL	12"
26	3'-6"	63.00±	WATER	METAL	20"
800	2'-10"	62.87±	WATER	COPPER	1 1/2"
900	1'-2"	64.53±	WATER	METAL	4"

NOTE:
Q_{100}, V_{100} & HGL INFORMATION PROVIDED BY CITY OF ALBUQUERQUE HYDROLOGY SECTION

KEYED NOTES

1. CONTRACTOR TO REMOVE & DISPOSE EXISTING 6" WATERLINE AND INSTALL NEW 6" WATERLINE AS SHOWN.
2. CONTRACTOR TO PROTECT EXISTING 12" VHP GAS LINE COORNDINATE WITH PNM.
3. CONTRACTOR TO PROTECT EXIST. 20" WL
4. CONTRACTOR TO PROTECT EXISTING 72" SAS LINE
5. CONTRACTOR TO PROTECT EXISTING 24" WL
6. CONTRACTOR TO PROTECT EXISTING 12" WL
7. REMOVE AND DISPOSE EXISTING JUNCTION BOX
8. CONNECT EXISTING 6" WATERLINE INTO NEW 6" WATERLINE INCLUDING 1-6"x6" TEE, 1-6" GATE VALVE, AND 1-TYPE "A" VALVE BOX
9. CONTRACTOR TO PROTECT EXISTING 2" GAS LINE
10. CONTRACTOR TO PLACE LEAN FILL TO SPRINGLINE OF 48" RCP. SEE DETAIL SHEET 6.
11. CONTRACTOR TO REMOVE AND DISPOSE OF 15 LF 54" RCP AND INSTALL PREFABRICATED REINFORCED CONCRETE PLUG

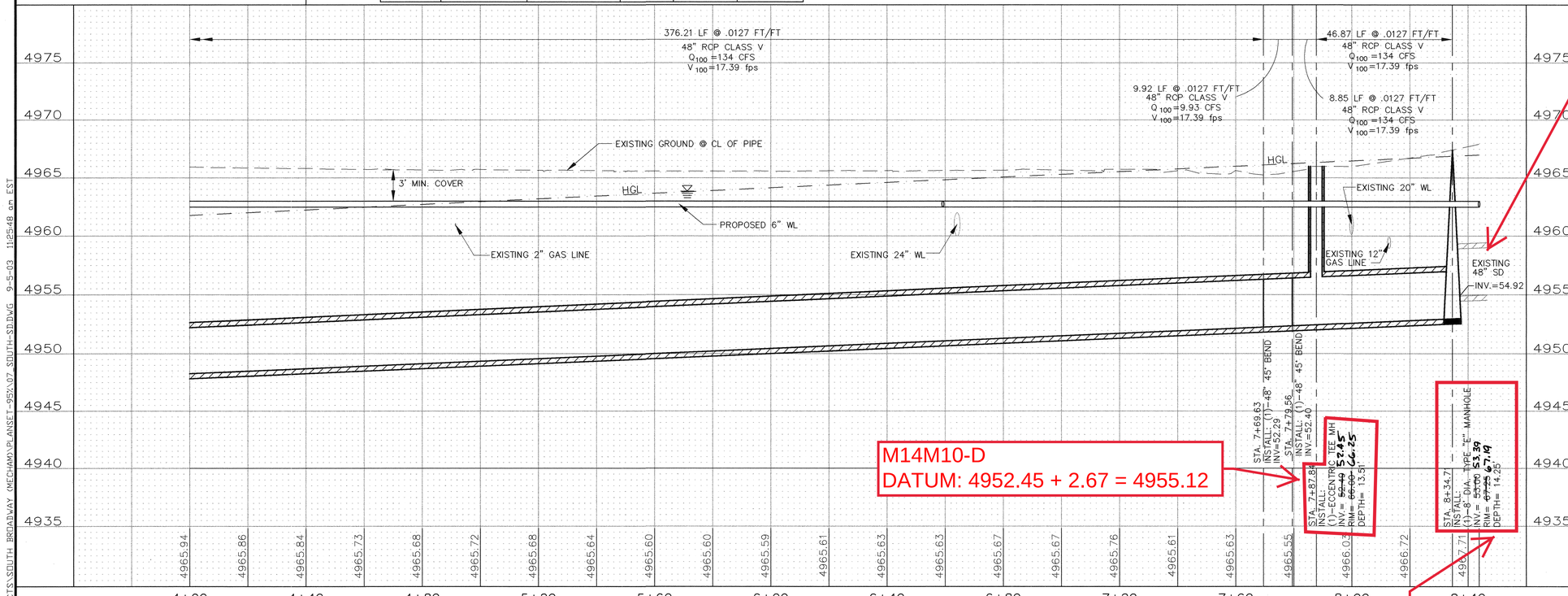

M14M10-D
DATUM: 4952.45 + 2.67 = 4955.12

M14M11-D
DATUM: 4953.39 + 2.67 = 4956.06

M14271-M14M11-D
OUTLET OFFSET =
4954.92+2.67' =
4957.59.-4956.06=1.53FT
THIS PLANSET IS
UPDATED FROM SOUTH
SIDE RELIEF STORM
SEWER (4954.74).

AS BUILT INFORMATION
CONTRACTOR — DATE
WORK STAKED BY — DATE
INSPECTOR ACCEPTANCE — DATE
FIELD VERIFICATION BY — DATE
DRAWINGS CORRECTED BY — DATE
MICRO-FILM INFORMATION
RECORDED BY — DATE
NO.

BENCH MARKS
ACS BRASS TABLET STAMPED "5-M14 1974"
LOCATED AT THE INTERSECTION OF
BROADWAY BLVD. AND WOODWARD A.VE.
X= 381,544.83
Y= 1,473,267.10
G-G = 0.9996800 ΔX = 00° 13' 38"
(NAD 1927/SLD 1929)
ELEVATION = 4937.592

SURVEY INFORMATION
FIELD NOTES
NO. | BY | DATE

ENGINEERS SEAL

NO.	DATE	REMARKS	BY
		REVISIONS	
		DESIGN	

DESIGNED BY DBT 08/05/03
DRAWN BY BLN 08/05/03
CHECKED BY DBT 08/05/03

THOMPSON ENGINEERING CONSULTANTS
CIVIL ENGINEERING SERVICES
PHONE-(505)271-2199 FAX-(505)237-8422

Smith Engineering Company
A Full Service Engineering Company
6400 Uptown Boulevard, N.E. Suite 500E Albuquerque, New Mexico 87110

CITY OF ALBUQUERQUE
PUBLIC WORKS DEPARTMENT
ENGINEERING DEVELOPMENT GROUP

TITLE: MECHEM STORM DRAIN AND DETENTION BASIN UTILITY PLAN AND PROFILE BROADWAY BLVD.

Design Review Committee: APPROVED SEP 12 2003 DESIGN REVIEW COMMITTEE
City Engineer Approval: APPROVED SEP 12 2003
Last Design Update — Mo. / Day / Yr. — Mo. / Day / Yr.

City Project No. 682502 | Zone Map No. M-14 | Sheet No. | Drawing No. 7 of 25

Z:\PROJECTS\SOUTH BROADWAY (MECHAM)\PLANSET-95%\07 SOUTH-SD.DWG 9-5-03 11:25:48 am EST

POTHOLING INFORMATION

NO.	BURY TO TOP OF PIPE	ELEV. TO TOP OF PIPE	DESCRIPTION		
			UTILITY	MATERIAL	DIAMETER
1	2'-4"	39.37±	GAS	METAL	2.5"
2	2'-3"	39.28±	GAS	METAL	2.5"
3	6'-6"	34.70±	SAS	PVC	8"
4	6'-4"	34.87±	SAS	PVC	8"
5a	2'-3"	38.85±	GAS	METAL	2.5"
5b	3'-8"	37.43±	WATER	CAST IRON	6"
6	3'-8"	37.43±	WATER	CAST IRON	6"
7	4'-8"	37.83±	WATER	STEEL	6"
8	NO LOCATION	--	--	--	--
9	3'-0"	39.70±	GAS	METAL	2.5"
10	5'-1"	37.62±	SAS	PVC	8"
11	4'-0"	38.70±	WATER	STEEL	6"
12	7'-2"	35.53±	SAS	PVC	8"
13	2'-7"	38.70±	GAS	POLY	1.5"
14	2'-7"	39.92±	GAS	METAL	2.5"

KEYED NOTES

1. CONTRACTOR TO REMOVE AND DISPOSE ABANDONED 2" GAS LINE, COORDINATE W/PNM
2. REMOVE AND REPLACE EXISTING 6" WATERLINE FROM EXIST. VALVE TO WATERLINE IN WHEELER
3. CONTRACTOR TO PROTECT EXISTING 8" SAS
4. CONTRACTOR TO REMOVE AND REPLACE EXISTING 4" SAS SERVICE LINE PER COA STD DWG 2134
5. CONTRACTOR TO PROTECT EXISTING 2.5" GAS LINE, COORDINATE W/ PNM

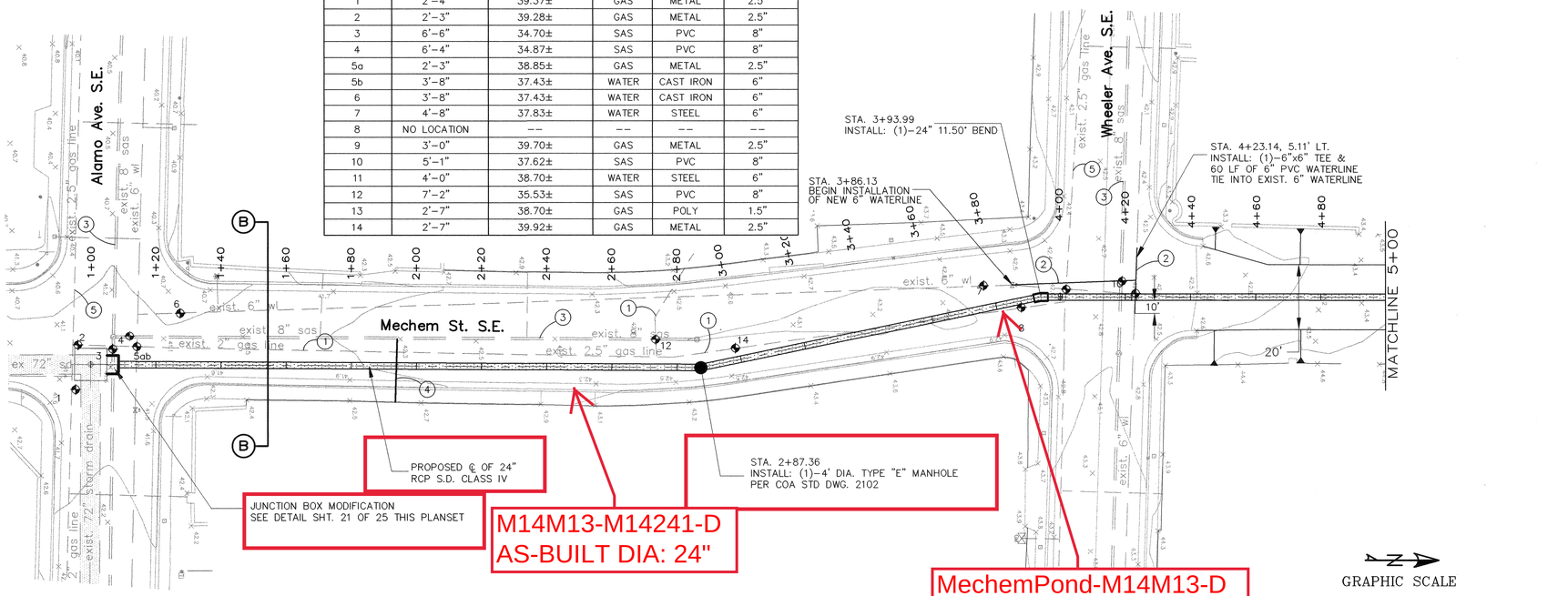

NOTE:
Q_{100}, V_{100} & HGL INFORMATION PROVIDED BY CITY OF ALBUQUERQUE HYDROLOGY SECTION

MECHEM STREET STA. 1+00 TO 5+00

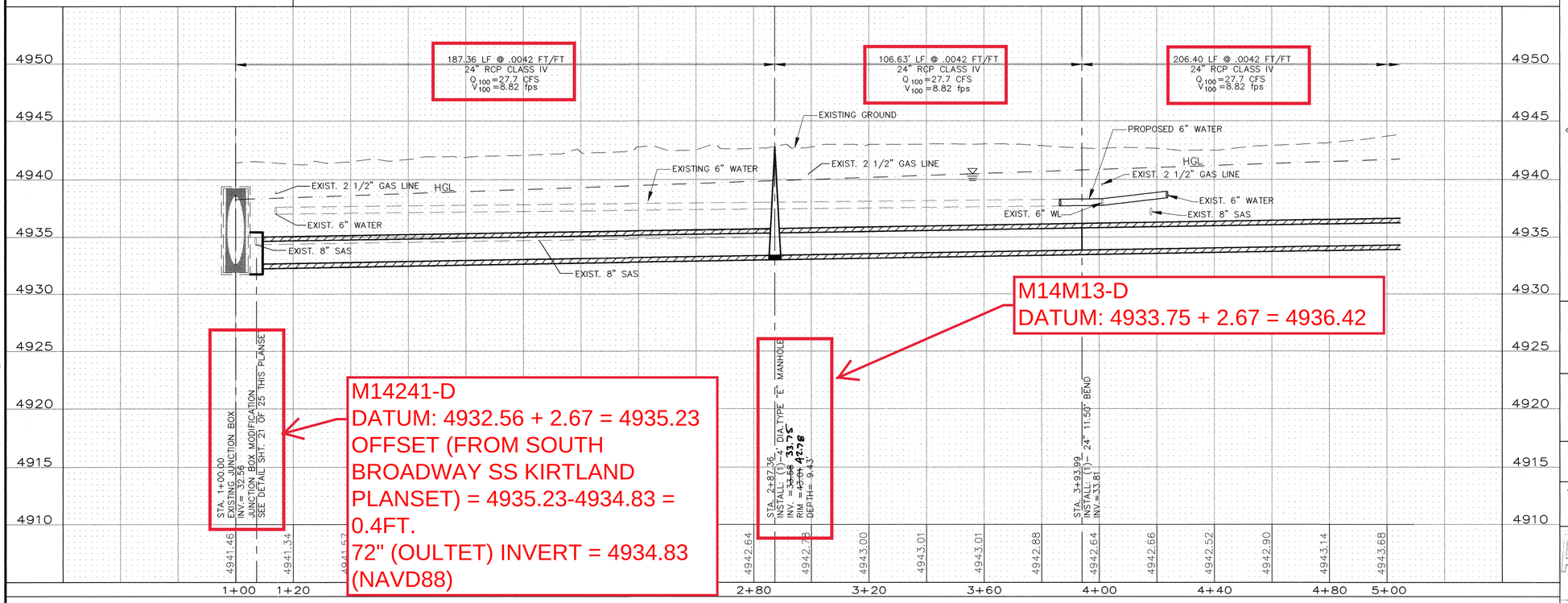

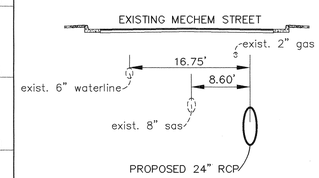

SECTION B-B

NOTE: DISTANCES SHOWN ARE HORIZONTAL DISTANCES FOR VERTICAL DISTANCES REFER TO PROFILE THIS SHT.

THOMPSON ENGINEERING CONSULTANTS
CIVIL ENGINEERING SERVICES
PHONE-(505)271-2199 FAX-(505)237-8422

Smith Engineering Company
A Full Service Engineering Company
6400 Uptown Boulevard, N.E. Suite 500E Albuquerque, New Mexico 87110

CITY OF ALBUQUERQUE
PUBLIC WORKS DEPARTMENT
ENGINEERING DEVELOPMENT GROUP

TITLE: MECHEM STORM DRAIN AND DETENTION BASIN
UTILTIY PLAN AND PROFILE MECHEM ST. STA. 1+00 TO 5+00

AS BUILT INFORMATION
CONTRACTOR
WORK STAKED BY — DATE
INSPECTOR ACCEPTANCE BY — DATE
FIELD VERIFICATION BY — DATE
DRAWINGS CORRECTED BY — DATE
MICRO-FILM INFORMATION
RECORDED BY — DATE
NO.

BENCH MARKS
ACS BRASS TABLET STAMPED "5-M14 1974"
LOCATED AT THE INTERSECTION OF BROADWAY BLVD. AND WOODWARD AVE.
X= 381,544.83
Y= 1,473,267.10
G-G = 0.9996800 ΔX = 00° 13' 38"
(NAD 1927/SLD 1929)
ELEVATION = 4937.592

SURVEY INFORMATION
FIELD NOTES

NO.	BY	DATE

ENGINEERS SEAL

NO.	DATE	REMARKS	BY
		REVISIONS	

DESIGN
DESIGNED BY DBT DATE 08/27/03
DRAWN BY BLN DATE 08/27/03
CHECKED BY DBT DATE 08/27/03

Design Review Committee: APPROVED SEP 12 2003 DESIGN REVIEW COMMITTEE
City Engineer Approval: APPROVED SEP 12 2003 CITY ENGINEER
Last Design Update — Mo. / Day / Yr. — Mo. / Day / Yr.

City Project No. 682502 | Zone Map No. M-14 | Sheet No. | Drawing No. 8 of 25

2:\PROJECTS\SOUTH BROADWAY (MECHAM)\PLANSET-95%\08_WEST-SD.DWG 9-5-03 8:55:40 am EST

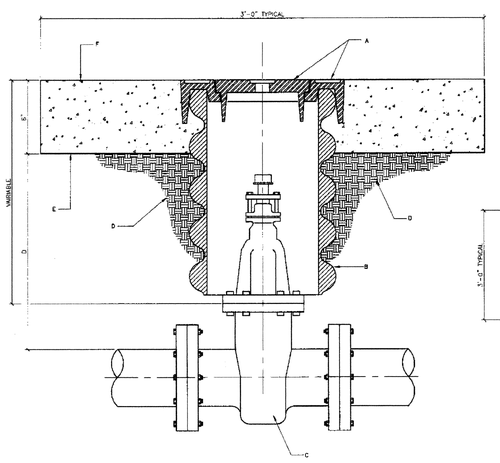

GENERAL NOTES:

A VALVE BOX RING AND COVER. SEE DWG. 2328.

B 10" DIAMETER RIBBED OR CORRUGATED PVC OR PE PIPE WITH SMOOTH INTERIOR.

C NEW OR EXISTING VALVE.

D COMPACTED BACKFILL. SOIL OR BASE COURSE MATERIAL (95% COMPACTION). SEE SECTION 701.

E 3'-0"x3'-0" OCTAGONAL CONCRETE COLLAR. COLLAR IS TO BE TAPERED IN UNPAVED ROADWAYS AND FLUSH IN PAVED ROADWAY. CONCRETE STRENGTH SHALL BE PER SECTION 101 OF THE STANDARD SPECIFICATIONS, LATEST EDITION.

F TOP OF CONCRETE COLLAR SHALL BE STAMPED WITH LINE SIZE AND DIRECTION. MINIMUM LETTER SIZE SHALL BE 3" IN HEIGHT.

REVISIONS	CITY OF ALBUQUERQUE WATER VALVE BOX
	DWG. 2326 JANUARY 2002

COA DRAFT DETAIL FOR WATER VALVE BOX (2326)

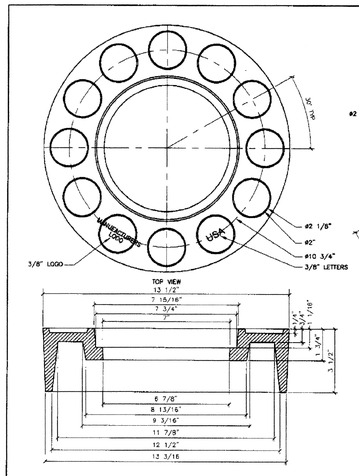

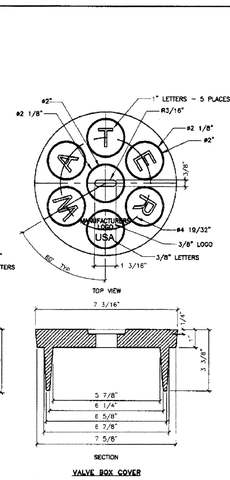

GENERAL NOTES - RING

1 ALBUQUERQUE VALVE BOX RING DESIGNED TO ACCEPT AN ALBUQUERQUE VALVE BOX COVER.

2 THE CASTING NUMBER, MANUFACTURER'S LOGO, DATE OF MANUFACTURE AND "USA" SHALL BE CAST IN A CONSPICUOUS LOCATION ON BOTH THE RING AND THE COVER.

3 FILLETS SHALL BE 1/4"R UNLESS OTHERWISE SPECIFIED.

4 A DRAFT ANGLE OF 3°-5° SHALL BE APPLIED UNLESS OTHERWISE SPECIFIED.

5 FINISH: REMOVE EXCESS IRON AND FINS.

6 THIS DETAIL DOES NOT APPLY FOR VALVE BOX RING AND COVER TO BE USED ON REUSE OR NON-POTABLE WATER SYSTEMS.

GENERAL NOTES - COVER

1 ALBUQUERQUE VALVE BOX COVER DESIGNED TO FIT INTO AN ALBUQUERQUE VALVE BOX RING.

2 THE CASTING NUMBER, MANUFACTURER'S LOGO, DATE OF MANUFACTURE AND "USA" SHALL BE CAST IN A CONSPICUOUS LOCATION ON BOTH THE RING AND THE COVER.

3 FILLETS SHALL BE 1/4"R UNLESS OTHERWISE SPECIFIED.

4 A DRAFT ANGLE OF 3°-5° SHALL BE APPLIED UNLESS OTHERWISE SPECIFIED.

5 FINISH: REMOVE EXCESS IRON AND FINS.

REVISIONS	CITY OF ALBUQUERQUE WATER RING AND COVER FOR VALVE BOX
	DWG. 2328 JANUARY 2002

COA DRAFT DETAIL FOR WATER RING AND COVER FOR VALVE BOX (2328)

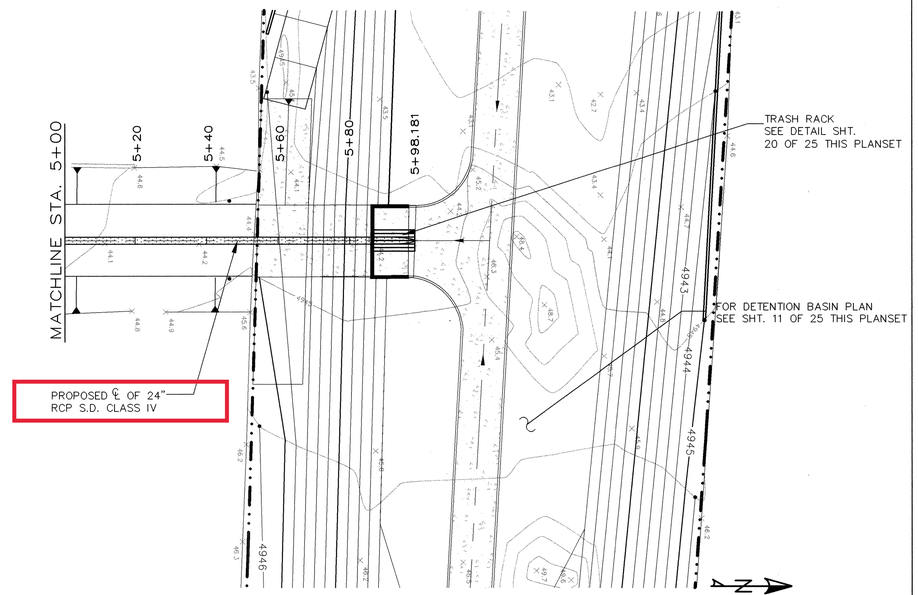

MECHEM STREET STA. 5+00 TO DETENTION POND

NOTE:
Q_{100}, V_{100} & HGL INFORMATION PROVIDED BY CITY OF ALBUQUERQUE HYDROLOGY SECTION

GRAPHIC SCALE

20 0 10 20 40 80

(IN FEET)
1 inch = 20 ft.

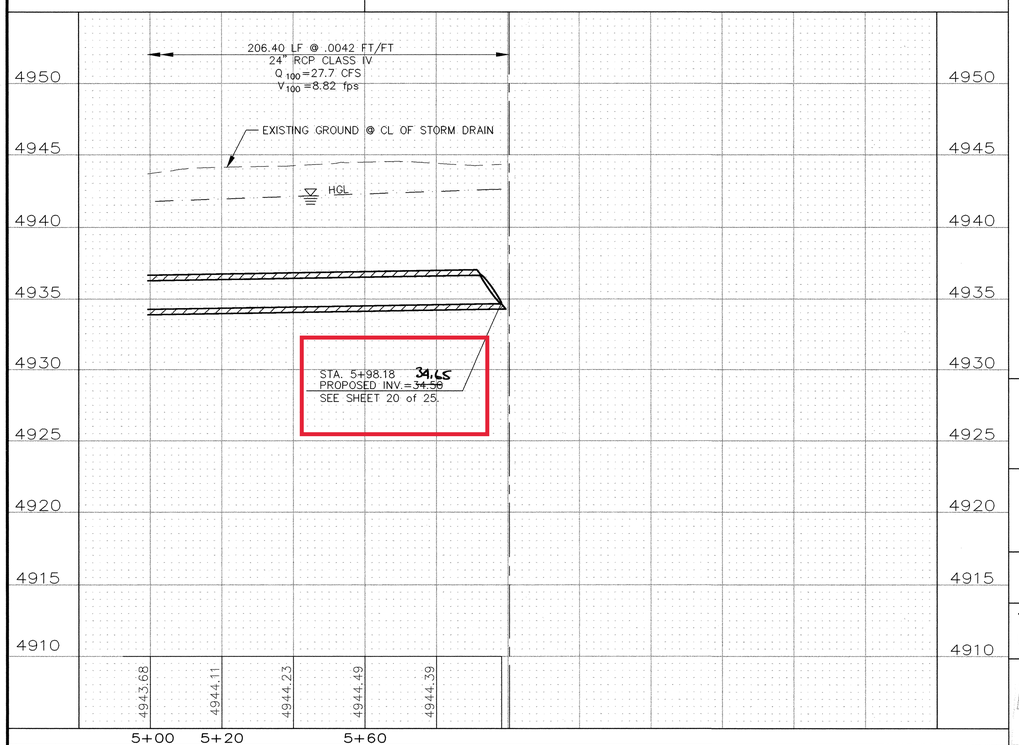

AS BUILT INFORMATION

CONTRACTOR
WORK STAKED BY — DATE
INSPECTOR'S ACCEPTANCE BY — DATE
FIELD VERIFICATION BY — DATE
DRAWINGS CORRECTED BY — DATE
MICRO-FILM INFORMATION
RECORDED BY — DATE
NO.

BENCH MARKS

ACS BRASS TABLET STAMPED "5-M14 1974"
LOCATED AT THE INTERSECTION OF BROADWAY BLVD. AND WOODWARD AVE.
X= 381,544.83
Y= 1,473,267.10
G-G = 0.9996800 ΔX = 00° 13' 38"
(NAD 1927/SLD 1929)
ELEVATION = 4937.592

SURVEY INFORMATION

FIELD NOTES

NO.	BY	DATE

ENGINEERS SEAL

DAVID B. THOMPSON — REGISTERED PROFESSIONAL ENGINEER

NO.	DATE	REMARKS	BY

REVISIONS

DESIGN

		DATE
DESIGNED BY	DBT	08/27/03
DRAWN BY	BLN	08/27/03
CHECKED BY	DBT	08/27/03

THOMPSON ENGINEERING CONSULTANTS
CIVIL ENGINEERING SERVICES
PHONE-(505)271-2199 FAX-(505)237-8422

Smith Engineering Company
A Full Service Engineering Company
6400 Uptown Boulevard, N.E. Suite 500E Albuquerque, New Mexico 87110

CITY OF ALBUQUERQUE
PUBLIC WORKS DEPARTMENT
ENGINEERING DEVELOPMENT GROUP

TITLE: MECHEM STORM DRAIN AND DETENTION BASIN
UTILITY PLAN AND PROFILE MECHEM ST. 5+00 TO DETENTION BASIN

Design Review Committee	City Engineer Approval	Last Design Update	No. / Day / Yr.	No. / Day / Yr.
APPROVED SEP 12 2003 DESIGN REVIEW COMMITTEE	APPROVED SEP 12 2003 CITY ENGINEER			

City Project No.	Zone Map No.	Sheet No.	Drawing No.
682502	M-14		9 of 25

Z:\PROJECTS\SOUTH BROADWAY (MECHAM)\PLANSET-95X\09_WEST-SD.DWG 8-27-03 11:34:21 am EST

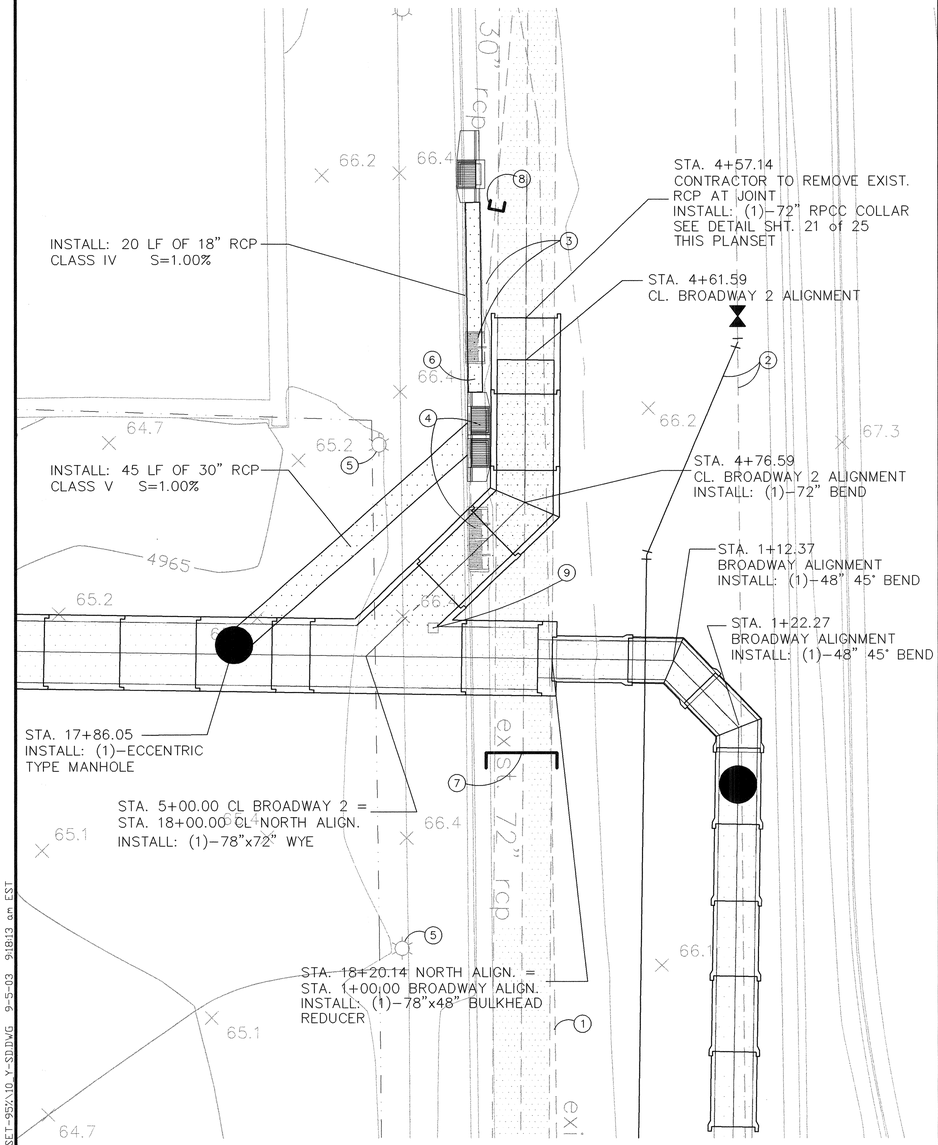

78" x 72" WYE DETAIL

GRAPHIC SCALE

(IN FEET)
1 inch = 10 ft. HORZ.

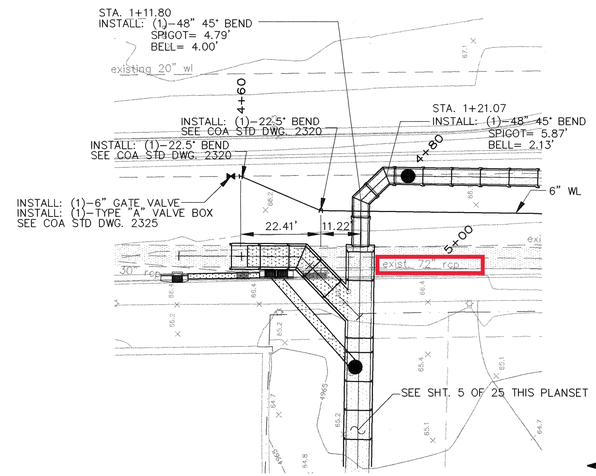

GRAPHIC SCALE

(IN FEET)
1 inch = 20 ft. HORZ.
1 inch = 5 ft. VERT.

NOTE:
Q_{100}, V_{100} & HGL INFORMATION PROVIDED BY CITY OF ALBUQUERQUE HYDROLOGY SECTION

72" RCP STORM DRAIN BROADWAY BLVD.

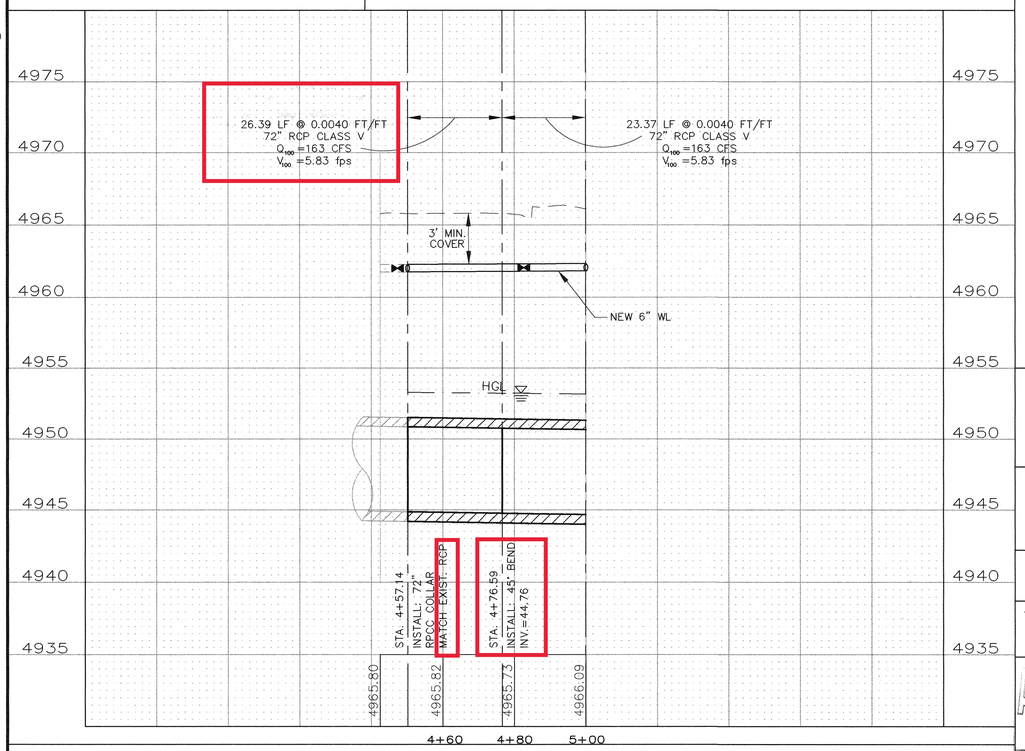

KEYED NOTES

1. EXISTING 2" GAS LINE TO BE REMOVED AND RELOCATED BY PNM
2. CONTRACTOR TO REMOVE AND DISPOSE EXISTING 6" WATERLINE, INSTALL NEW 6" WATERLINE AS SHOWN
3. CONTRACTOR TO REMOVE, DISPOSE, AND BUILD NEW TYPE "A" STORM INLET TOG=65.70 ; INV.=61.50
4. CONTRACTOR TO REMOVE, DISPOSE, AND BUILD NEW DOUBLE TYPE "C" STORM INLET TOG=65.57 ; INV.=61.35
5. CONTRACTOR TO PROTECT AND SUPPORT EXISTING POWER POLE, COORDINATE WITH PNM
6. CONTRACTOR TO REMOVE AND DISPOSE EXISTING 18" RCP, INSTALL NEW 18" RCP
7. CONTRACTOR TO REMOVE AND DISPOSE 60 LF OF EXISTING 72" RCP AND INSTALL PREFABRICATED RC PLUG.
8. CONTRACTOR TO REMOVE AND DISPOSE 15 LF OF EXISTING 30" RCP AND INSTALL PREFABRICATED RC PLUG.
9. CONTRACTOR TO REMOVE AND RELOCATE EXISTING WATER METER

AS BUILT INFORMATION
CONTRACTOR
WORK STAKED BY DATE
INSPECTOR'S ACCEPTANCE BY DATE
FIELD VERIFICATION BY DATE
DRAWINGS CORRECTED BY DATE
MICRO-FILM INFORMATION
RECORDED BY DATE
NO.

BENCH MARKS
ACS BRASS TABLET STAMPED "5-M14 1974"
LOCATED AT THE INTERSECTION OF
BROADWAY BLVD. AND WOODWARD AVE.
X= 381,544.83
Y= 1,473,267.10
G-G = 0.9996800 ΔX = 00° 13' 38"
(NAD 1927/SLD 1929)
ELEVATION = 4937.592

SURVEY INFORMATION
FIELD NOTES

NO.	BY	DATE

ENGINEERS SEAL

NO.	DATE	REMARKS	BY
		REVISIONS	

DESIGNED BY DBT DATE 08/27/03
DRAWN BY BLN DATE 08/27/03
CHECKED BY DBT DATE 08/27/03

THOMPSON ENGINEERING CONSULTANTS
CIVIL ENGINEERING SERVICES
PHONE-(505)271-2199 FAX-(505)237-8422

Smith Engineering Company
A Full Service Engineering Company
6400 Uptown Boulevard, N.E. Suite 500E Albuquerque, New Mexico 87110

CITY OF ALBUQUERQUE
PUBLIC WORKS DEPARTMENT
ENGINEERING DEVELOPMENT GROUP

TITLE: MECHEM STORM DRAIN AND DETENTION BASIN
UTILITY PLAN AND PROFILE BROADWAY BLVD. 72" STORM DRAIN
AND 78" x 72" WYE DETAIL

Design Review Committee: APPROVED SEP 12 2003 DESIGN REVIEW COMMITTEE
City Engineer Approval: APPROVED SEP 12 2003
Last Design Update | Mo. / Day / Yr. | Mo. / Day / Yr.

City Project No.	Zone Map No.	Sheet No.	Drawing No.
682502	M-14		10 of 25

Z:\PROJECTS\SOUTH BROADWAY (MECHAM)\PLANSET-95%\10 Y-SD.DWG 9-5-03 9:18:13 am EST

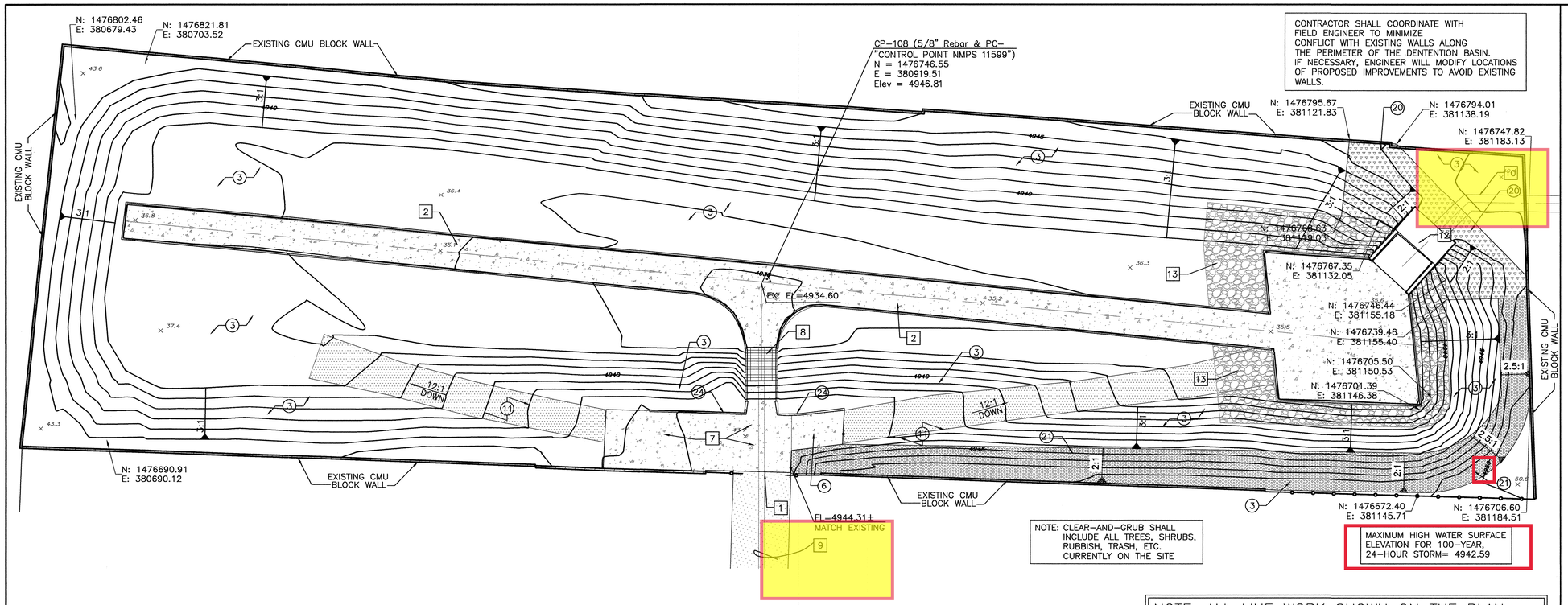

NOTE: ALL LINE WORK SHOWN ON THE PLAN VIEW EXCEPT FOR THE RIP RAP IS FROM AN AS-BUILT SURVEY PERFORMED BY SURVEYING CONTROL, INC. IN MAY 2010. THE LIMIT OF RIP RAP IS NOT AS BUILT AND IS BASED ON FIELD OBSERVATIONS.

KEYED NOTES

□ – EXISTING FEATURES

○ – TO BE CONSTRUCTED

1. EXISTING FENCE AND GATE TO REMAIN.
2. EXISTING LOW FLOW CHANNEL TO REMAIN.
3. SEED ALL AREAS PER COA STANDARD SPECIFICATION 1012.
4. NOT USED.
5. NOT USED.
6. NEW RPCC ACCESS SLAB AND EMERGENCY SPILLWAY. SEE DETAIL ON THIS SHEET.
7. EXISTING RPCC ACCESS SLAB AND EMERGENCY SPILLWAY.
8. EXISTING HEADWALL AND OUTLET TRASH RACK.
9. EXISTING 24" RCP STORM DRAIN.
10. EXISTING 72" RCP STORM DRAIN,
11. 12' WIDE AGGREGATE BASE COURSE ACCESS RAMP. SEE DETAIL ON THIS SHEET.
12. EXISTING ENERGY DISSIPATOR.
13. EXISTING 2' THICK TYPE M DUMPED RIP-RAP WITH FILTER FABRIC.
14. 24" SUBGRADE COMPACTED TO 90% ASTM D-1557.
15. NOT USED.
16. EXISTING GREY CMU BLOCK WALL TO REMAIN.
17. 8" SUBGRADE. COMPACT TO 90% ASTM D-1557
18. FILTER FABRIC UNDER RIP RAP.
19. NOT USED.
20. 1.5' THICK TYPE L DUMPED RIP RAP.
21. 2" GRAVEL MULCH.
22. EXISTING FENCE POSTS.*
23. INSTALL NEW FENCE.*
24. NEW CURB.

LEGEND

TC = TOP OF CONCRETE

FL = FLOWLINE

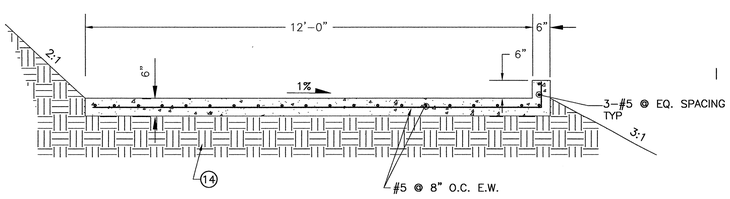

RPCC ACCESS SLAB DETAIL

SCALE: 1/2"=1'-0"

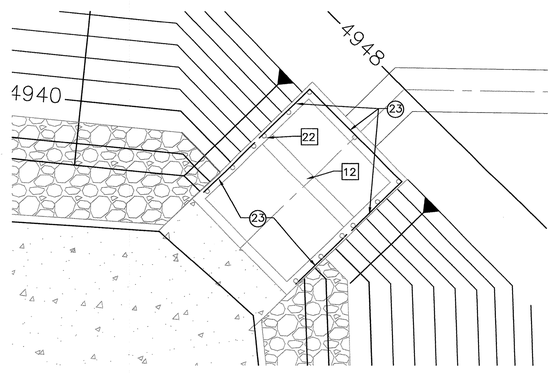

ENERGY DISSIPATOR

SCALE: 1"=10'

*NOTE: 1. ENERGY DISSAPATOR HAS EXISTING FENCE POLES ATTACHED TO THE STRUCTURE. POLES THAT ARE BENT SHALL BE REPAIRED PER DETAIL ON THIS SHEET.

2. FENCING SHALL BE TACK WELDED ONTO EXISTING POSTS. TOP DECK OF ENERGY DISSAPATOR SHALL BE FENCED SEPARATELY FROM STRUCTURE WING WALLS.

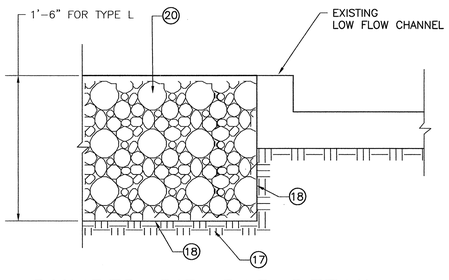

DUMPED RIP-RAP DETAIL

SCALE: 1"=1'-0"

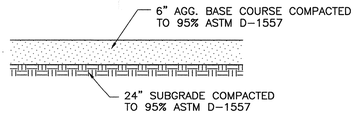

ACCESS RAMP DETAIL

SCALE: 1/2"=1'-0"

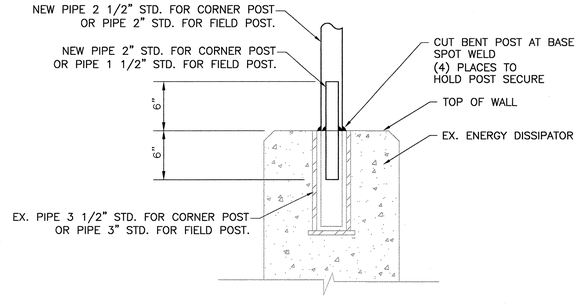

FENCE POST REPAIR

SCALE: 1-1/2"=1'-0"

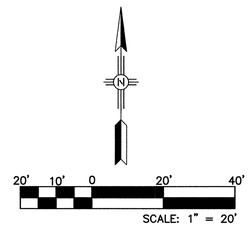

103100-MechemSD
Smith Engineering Company
A Full Service Engineering Company
2201 San Pedro Boulevard. N.E., Bldg. #4, Suite 200 Albuquerque, New Mexico 87110

AS BUILT INFORMATION

CONTRACTOR		
WORK STAKED BY	SCI	DATE 5/2010
INSPECTOR'S ACCEPTANCE BY	CDL/SEC	DATE 7/2010
FIELD VERIFICATION BY	PJC	DATE 4/2011
DRAWINGS CORRECTED BY	MLM	DATE 6/2011

MICRO-FILM INFORMATION

RECORDED BY	DATE
NO.	

BENCH MARKS

ACS BRASS TABLET STAMPED "5-M14 1974" LOCATED AT THE INTERSECTION OF BROADWAY BLVD AND WOODWARD AVE

NAD 1927/SLD 1929

ΔX = 00° 13' 38"

ELEVATION = 4937.592 Ft.

PLANE COORDINATES: NORTHING = 1473267.1

EASTING = 381544.83

GROUND TO GRID FACTOR: 0.9996800

SURVEY INFORMATION

FIELD NOTES

NO.	BY	DATE
11599	STEVE TOLER	2003

ENGINEERS SEAL

PARACON J. CONLEY NEW MEXICO 10141 PROFESSIONAL ENGINEER LICENSED

4/04/2011

NO.	DATE	REMARKS	BY
4	04/15/11	AS BUILT PROJECT	PJC
3	10/15	MODIFY CMU; ADD NOTES	PJC

REVISIONS

DESIGNED BY	PJC	DATE 03/03
DRAWN BY	SEC	DATE 03/03
CHECKED BY	PJC	DATE 03/03

DESIGN

CITY OF ALBUQUERQUE
PUBLIC WORKS DEPARTMENT
ENGINEERING DEVELOPMENT GROUP

TITLE: MECHEM STORM DRAIN AND DETENTION BASIN

MECHEM DETENTION BASIN AND DETAILS (ADD)

Design Review Committee	City Engineer Approval	Last Design Update	No. / Day / Yr.	No. / Day / Yr.

City Project No.	Zone Map No.	Sheet No.	Drawing No.
6825.91	M-14		11.1 of 25

Q:\SEC---PROJECTS\2009 Projects\109104 COA Mechem Pond\CADD\AsBuilt041511.DWG

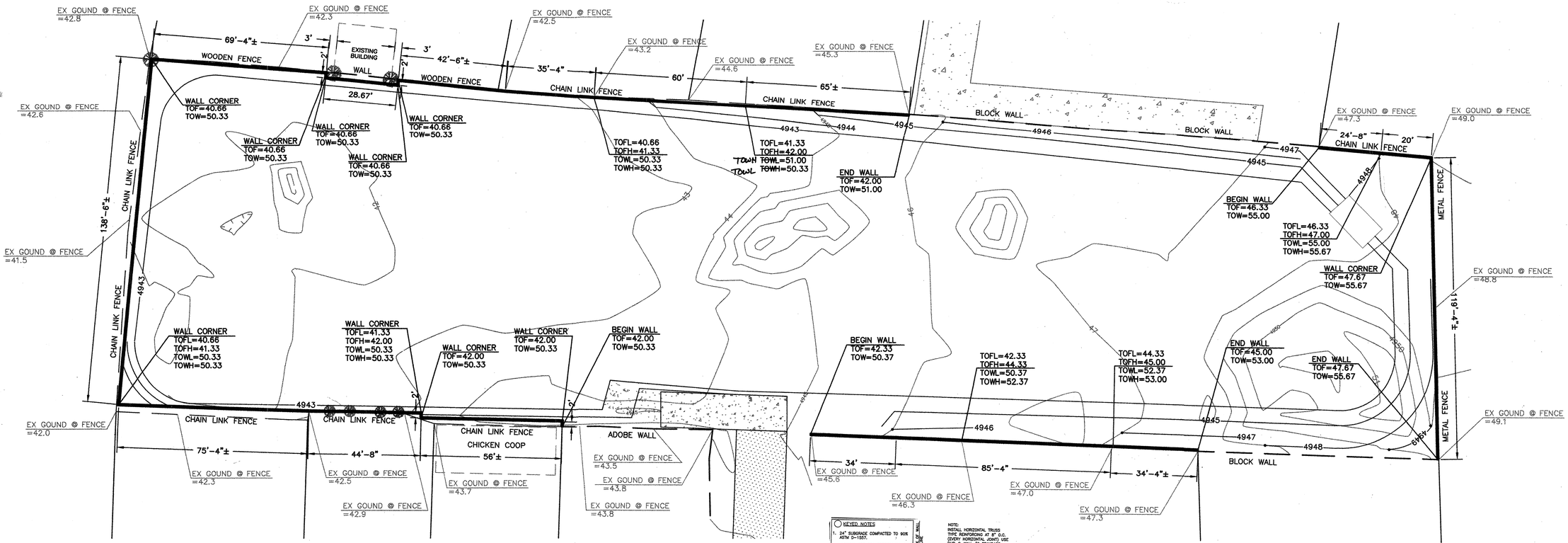

○ KEYED NOTES

1. 24" SUBGRADE COMPACTED TO 90% ASTM D-1557.
2. BACKFILL PER COA SPECIFICATIONS.

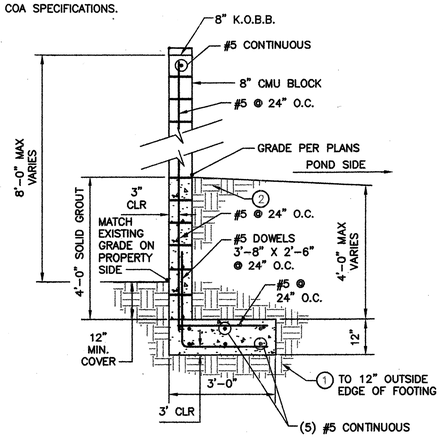

CMU WALL DETAIL

SCALE: NTS

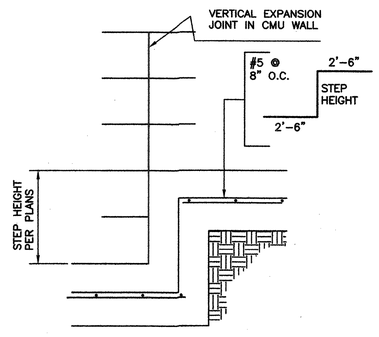

STEPPED FOOTING DETAIL

NOT TO SCALE

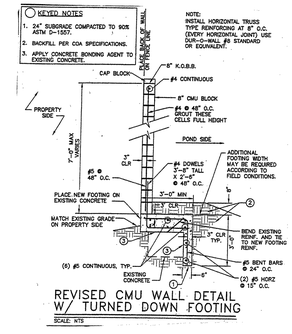

REVISED CMU WALL DETAIL W/ TURNED DOWN FOOTING

SCALE: NTS

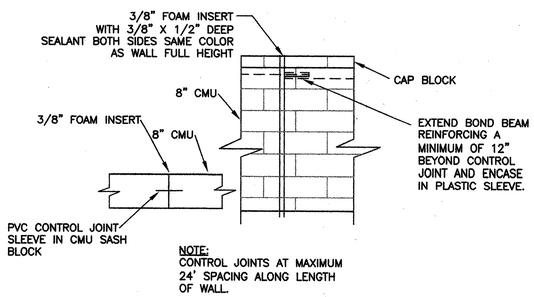

NOTE:
CONTROL JOINTS AT MAXIMUM 24' SPACING ALONG LENGTH OF WALL.

CMU WALL CONTROL JOINT DETAILS

NOT TO SCALE

CONSTRUCTION NOTES:

1. CONTRACTOR SHALL COORDINATE NEW WALL CONSTRUCTION WITH LAND OWNERS. REMOVE AND RETURN EXISTING FENCING MATERIALS AT LAND OWNER'S REQUEST.
2. CONTRACTOR SHALL COORDINATE NEW WALL CONSTRUCTION BASED ON FIELD CONDITION OF EXISTING FENCING AND WALLS.
3. CONTRACTOR TO CLEAR TREES AND DEBRIS AS NECESSARY FOR NEW WALL CONSTRUCTION.
4. CONTRACTOR IS RESPONSIBLE ANY DAMAGE TO EXISTING STRUCTURES. CONTRACTOR SHALL REPAIR OR REPLACE ANY DAMAGE TO STRUCTURES THAT MAY OCCUR DURING NEW WALL CONSTRUCTION

N

20' 10' 0 20' 40'

SCALE: 1" = 20'

LEGEND

TOW = TOP OF WALL
TOWH = TOP OF WALL (HIGH)
TOWL = TOP OF WALL (LOW)
TOF = TOP OF FOOTING
TOFH = TOP OF FOOTING (HIGH)
TOFL = TOP OF FOOTING (LOW)

PATRICK J. CONLEY NEW MEXICO 10141 LICENSED PROFESSIONAL ENGINEER
2/11/05

103100-MechemSD
Smith Engineering Company
A Full Service Engineering Company
5501 San Pedro Boulevard, N.E., Bldg. #4, Suite 200 Albuquerque, New Mexico 87110

CITY OF ALBUQUERQUE
PUBLIC WORKS DEPARTMENT
ENGINEERING DEVELOPMENT GROUP

TITLE: MECHEM STORM DRAIN AND DETENTION BASIN

MECHEM DETENTION BASIN CMU WALL PLAN AND DETAILS

Design Review Committee	City Engineer Approval	Last Design Update	No. / Day / Yr.	No. / Day / Yr.

City Project No.	Zone Map No.	Sheet No.	Drawing No.
6825.91	M-14		11A of 25

ENGINEERS SEAL

SURVEY INFORMATION

FIELD NOTES

NO.	BY	DATE
11599	STEVE TOLER	2003

BENCH MARKS

ACS BRASS TABLET STAMPED "5-M14 1974" LOCATED AT THE INTERSECTION OF BROADWAY BLVD AND WOODWARD AVE

ELEVATION = 4937.592 FT.
PLANE COORDINATES: NORTHING = 1473267.1
EASTING = 381544.83
GROUND TO GRID FACTOR: 0.9996800

AS BUILT INFORMATION

CONTRACTOR
WORK STAKED BY — DATE
INSPECTOR'S ACCEPTANCE BY — DATE
AS-BUILT VERIFICATION BY — DATE
DRAWINGS CORRECTED BY — DATE

MICRO-FILM INFORMATION

RECORDED BY — DATE
NO.

REVISIONS

NO.	DATE	REMARKS	BY
1	10/15	MODIFY CMU- ADD NOTES	PJC

DESIGN

		DATE
DESIGNED BY	PJC	03/03
DRAWN BY	SEC	03/03
CHECKED BY	PJC	03/03

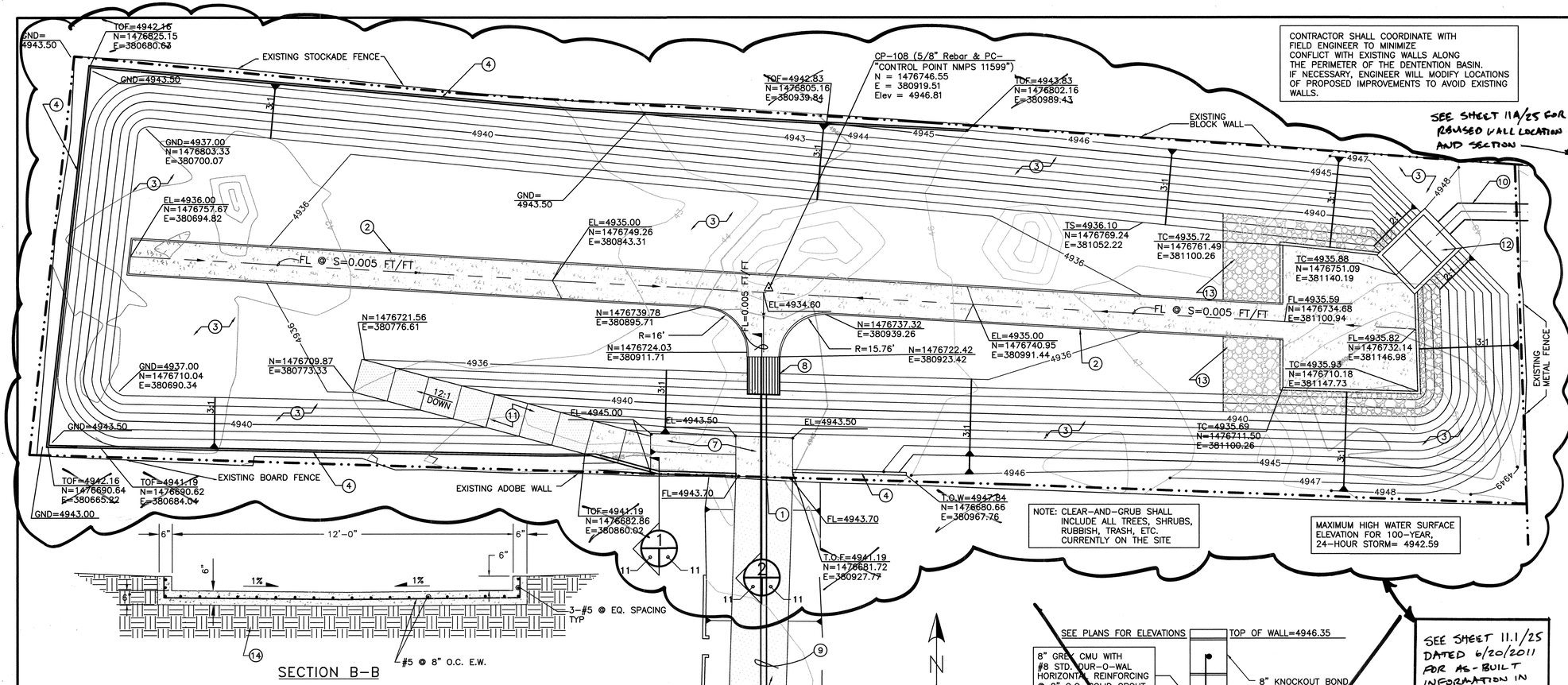

CONTRACTOR SHALL COORDINATE WITH FIELD ENGINEER TO MINIMIZE CONFLICT WITH EXISTING WALLS ALONG THE PERIMETER OF THE DENTENTION BASIN. IF NECESSARY, ENGINEER WILL MODIFY LOCATIONS OF PROPOSED IMPROVEMENTS TO AVOID EXISTING WALLS.

NOTE: CLEAR-AND-GRUB SHALL INCLUDE ALL TREES, SHRUBS, RUBBISH, TRASH, ETC. CURRENTLY ON THE SITE

KEYED NOTES

1 EXISTING FENCE AND GATE TO REMAIN.

2 LOW FLOW CHANNEL. SEE DETAIL THIS SHEET.

3 SEED ALL DIRT AREAS PER COA STANDARD SPECIFICATIONS.

4 ~~CONSTRUCT 8" CMU BLOCKWALL PER DETAIL THIS SHEET.~~

5 NEW AGGREGATE BASE COURSE ACCESS ROAD, SEE PLAN AND PROFILE SHEET 9.

6 NOT USED.

7 RPCC ACCESS SLAB AND EMERGENCY SPILLWAY.

8 HEADWALL AND OUTLET TRASH RACK. SEE SHEET 20.

9 NEW 24" RCP STORM DRAIN. SEE PLAN AND PROFILE SHEET 9.

10 NEW 72" RCP STORM DRAIN, SEE PLAN AND PROFILE SHEET 4.

11 12' WIDE AGGREGATE BASE COURSE ACCESS RAMP. SEE DETAIL ON THIS SHEET.

12 ENERGY DISSIPATOR. SEE SHEET 17.

13 INSTALL 2' THICK RIP-RAP WITH FILTER FABRIC. SEE DETAIL THIS SHEET.

14 24" SUBGRADE COMPACTED TO 90% ASTM D-1557.

15 BACKFILL PER COA SPECIFICATIONS.

16 8" GREY CMU BLOCK WITH CAP BLOCK. FULLY GROUT EACH CELL WITH VERTICAL REINFORCING. INSTALL LADDER REINFORCING AT MORTAR JOINTS. CONSTRUCT EXPANSION JOINT AT 16' O.C. (OR LESS).

17 8" SUBGRADE. COMPACT TO 90% ASTM D-1557

18 FILTER FABRIC UNDER RIP RAP.

19 2' THICK TYPE M DUMPED RIP RAP.

LEGEND

TC = TOP OF CONCRETE
TOC = TOP OF CURB
TOW = TOP OF WALL
FL = FLOWLINE
TS = TOE OF SLOPE
TOF = TOP OF FOOTING

SECTION B-B

LOW FLOW CHANNEL DETAIL

SCALE: 1/2"=1'-0"

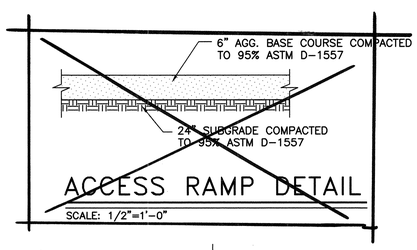

ACCESS RAMP DETAIL

SCALE: 1/2"=1'-0"

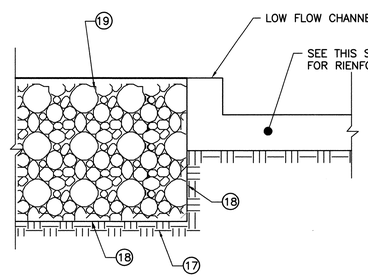

DUMPED RIP-RAP DETAIL

SCALE: 1"=1'-0"

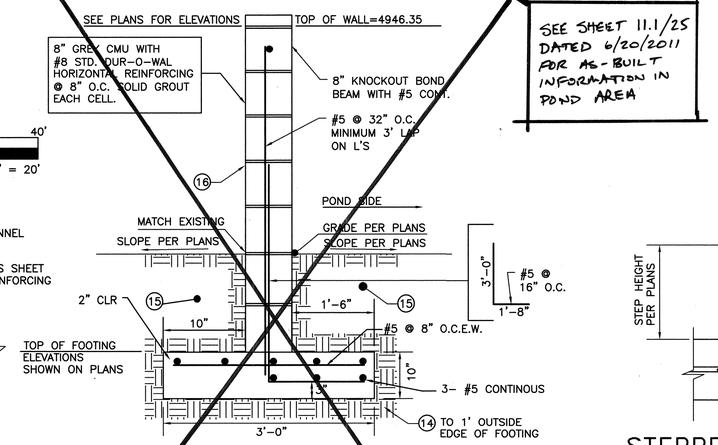

CMU WALL DETAIL

SCALE: NTS

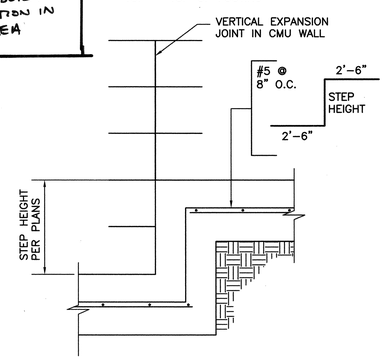

STEPPED FOOTING DETAIL

NOT TO SCALE

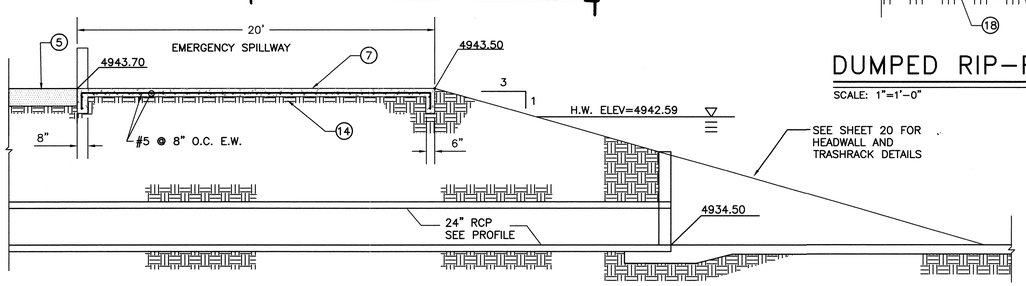

SECTION THROUGH SPILLWAY

SCALE: 1/4"=1'-0"

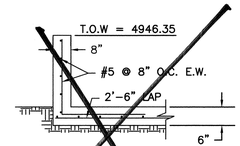

SECTION

SCALE: 1/2"=1'-0"

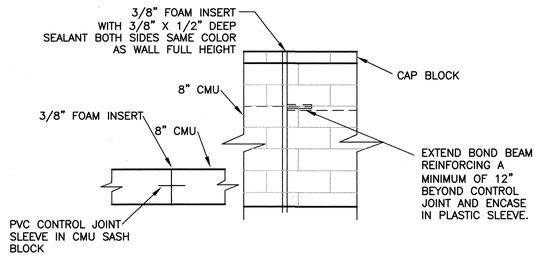

CMU WALL CONTROL JOINT DETAILS

NOT TO SCALE

AS BUILT INFORMATION

CONTRACTOR		
STAKED BY		DATE
INSPECTOR'S ACCEPTANCE BY		DATE
FIELD VERIFICATION BY		DATE
DRAWINGS CORRECTED BY		DATE

MICRO-FILM INFORMATION

RECORDED BY	DATE
NO.	

BENCH MARKS

ACS BRASS TABLET STAMPED "5-M14 1974" LOCATED AT THE INTERSECTION OF BROADWAY BLVD AND WOODWARD AVE

ELEVATION = 4937.592 Ft.
PLANE COORDINATES: NORTHING = 1473267.1
EASTING = 381544.83
GROUND TO GRID FACTOR: 0.9996800

SURVEY INFORMATION

FIELD NOTES

NO.	BY	DATE
11599	STEVE TOLER	2003

ENGINEERS SEAL

PATRICK J. COALEY NEW MEXICO (10141) PROFESSIONAL ENGINEER

10/15/03

REVISIONS

NO.	DATE	REMARKS	BY
A	10/15	MODIFY CMU: ADD NOTES	PJC

DESIGN

		DATE
DESIGNED BY	PJC	03/03
DRAWN BY	SEC	03/03
CHECKED BY	PJC	03/03

103100-MechemSD
Smith Engineering Company
A Full Service Engineering Company
6400 Uptown Boulevard, N.E. Suite 500E Albuquerque, New Mexico 87110

CITY OF ALBUQUERQUE
PUBLIC WORKS DEPARTMENT
ENGINEERING DEVELOPMENT GROUP

TITLE: MECHEM STORM DRAIN AND DETENTION BASIN

MECHEM DETENTION BASIN AND DETAILS

Design Review Committee: APPROVED OCT 15 2003 DRB REVIEW
City Engineer Approval: APPROVED OCT 15 2003 CITY E
Last Design Update | No. / Day / Yr. | No. / Day / Yr.

City Project No. 6825.91 | Zone Map No. M-14 | Sheet No. | Drawing No. 11 of 25

ADD'M #1

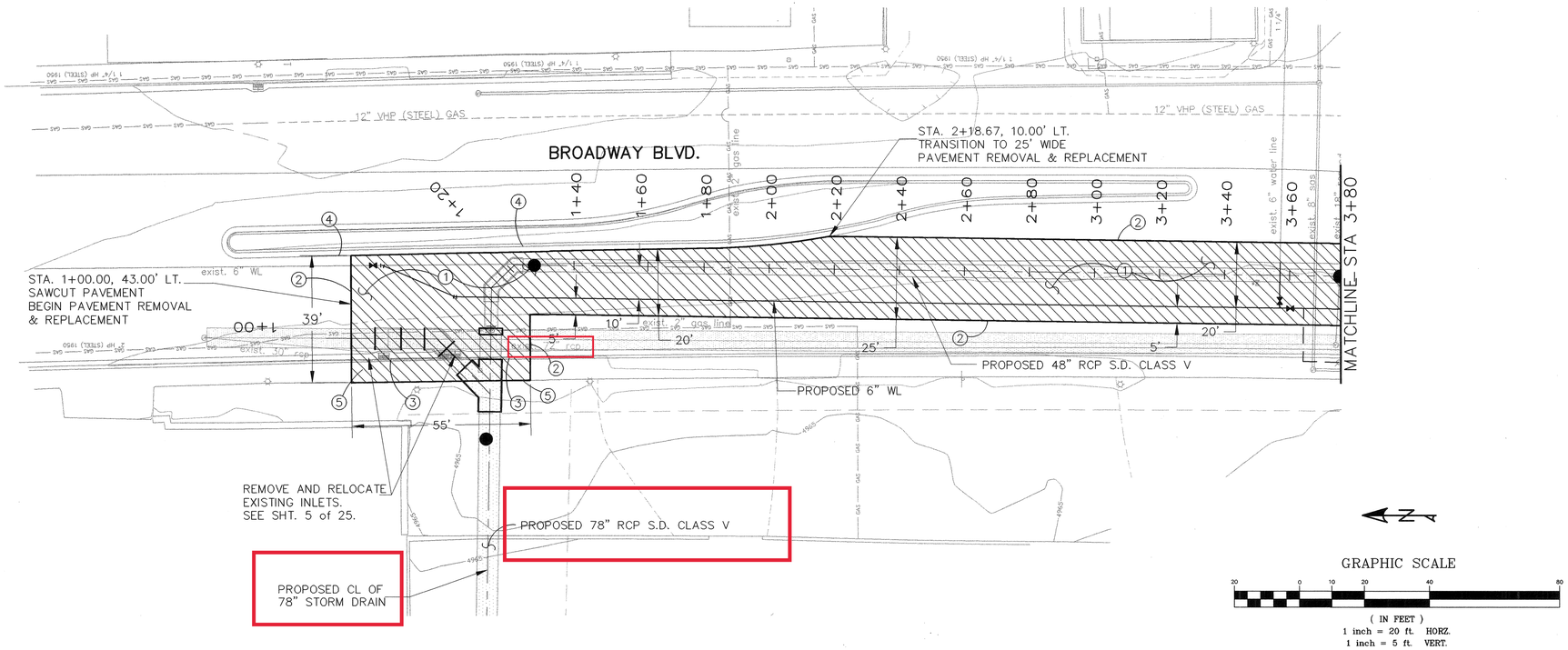

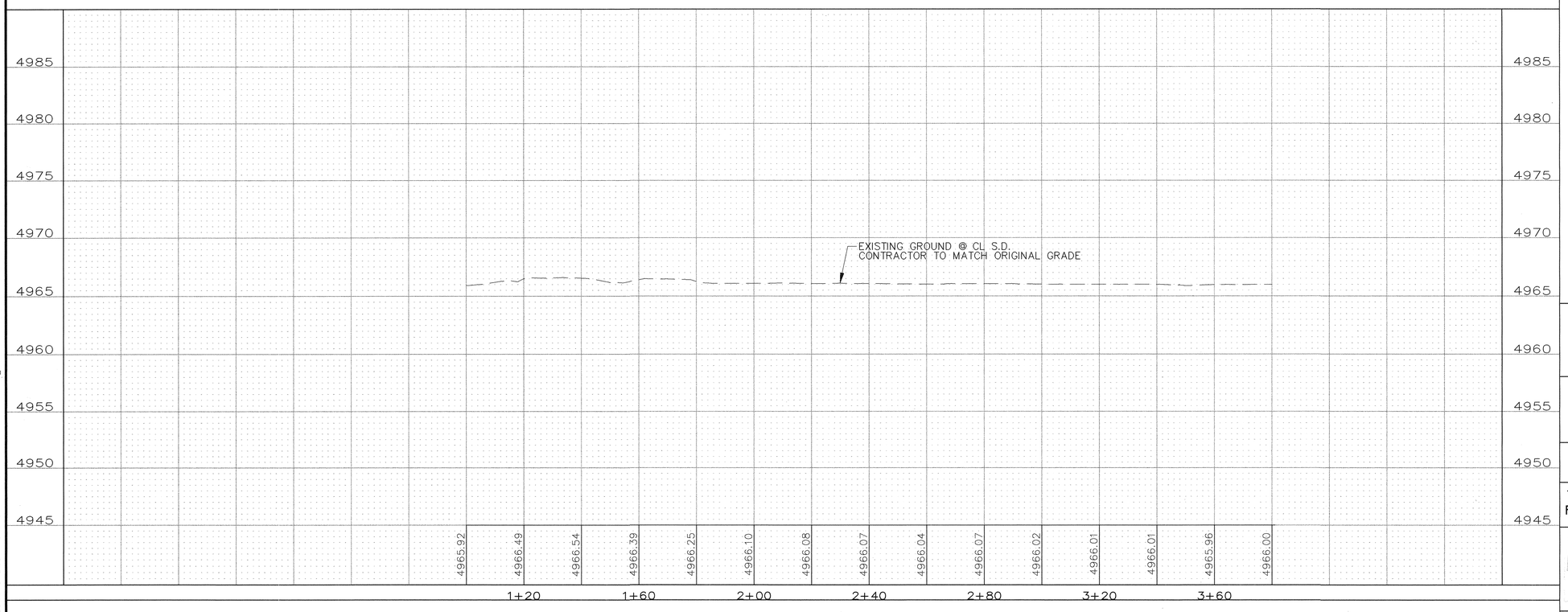

KEYED NOTES

1. REMOVE AND REPLACE ARTERIAL PAVEMENT SEE SHT. 16 FOR TYPICAL SECTION PER COA STD DWG 2465
2. SAWCUT NEAT LINES IN PAVEMENT BEFORE REMOVAL
3. REMOVE AND REPLACE 55 LF OF EXISTING STANDARD CURB & GUTTER. PER COA STD DWG. 2415
4. CONTRACTOR TO PROTECT AND LEAVE IN PLACE EXISTING MEDIAN CURB & GUTTER
5. REMOVE AND REPLACE 55 LF OF EXISTING 6' WIDE SIDEWALK PER COA STD DWG. 2430

NOTE

PAY LIMITS FOR PAVEMENT REMOVAL AND REPLACEMENT ARE SHOWN AS DIMENSIONED ON THIS SHEET.

AS BUILT INFORMATION

CONTRACTOR
WORK STAKED BY — DATE
INSPECTOR ACCEPTANCE — DATE
FIELD VERIFICATION BY — DATE
DRAWINGS CORRECTED BY — DATE
MICRO-FILM INFORMATION
RECORDED BY — DATE
NO.

BENCH MARKS

ACS BRASS TABLET STAMPED "5-M14 1974"
LOCATED AT THE INTERSECTION OF
BROADWAY BLVD. AND WOODWARD AVE.
X= 381,544.83
Y= 1,473,267.10
G-G = 0.9996800 ΔX = 00° 13' 38"
(NAD 1927/SLD 1929)
ELEVATION = 4937.592

SURVEY INFORMATION

FIELD NOTES

NO.	BY	DATE

ENGINEERS SEAL

NO.	DATE	REMARKS	BY

REVISIONS

		DATE
DESIGNED BY	DBT	08/27/03
DRAWN BY	BLN	08/27/03
CHECKED BY	DBT	08/27/03

THOMPSON ENGINEERING CONSULTANTS
CIVIL ENGINEERING SERVICES
PHONE-(505)271-2199 FAX-(505)237-8422

Smith Engineering Company
A Full Service Engineering Company
6400 Uptown Boulevard, N.E. Suite 500E Albuquerque, New Mexico 87110

CITY OF ALBUQUERQUE
PUBLIC WORKS DEPARTMENT
ENGINEERING DEVELOPMENT GROUP

TITLE: MECHEM STORM DRAIN AND DETENTION BASIN
PAVING PLAN AND PROFILE BROADWAY BLVD. STA. 1+80 to STA. 2+80

Design Review Committee: SEP 1 2 2003 — DESIGN REVIEW COMMITTEE
City Engineer Approval: SEP 1 2 2003 — CITY ENGINEER
Last Design Update | Mo. / Day / Yr. | Mo. / Day / Yr.

City Project No. 682502 | Zone Map No. M-14 | Sheet No. | Drawing No. 12 of 25

Z:\PROJECTS\SOUTH BROADWAY (MECHAM)\PLANSET-95X11_BROAD-PAVE.DWG 9-5-03 9:21:32 am EST

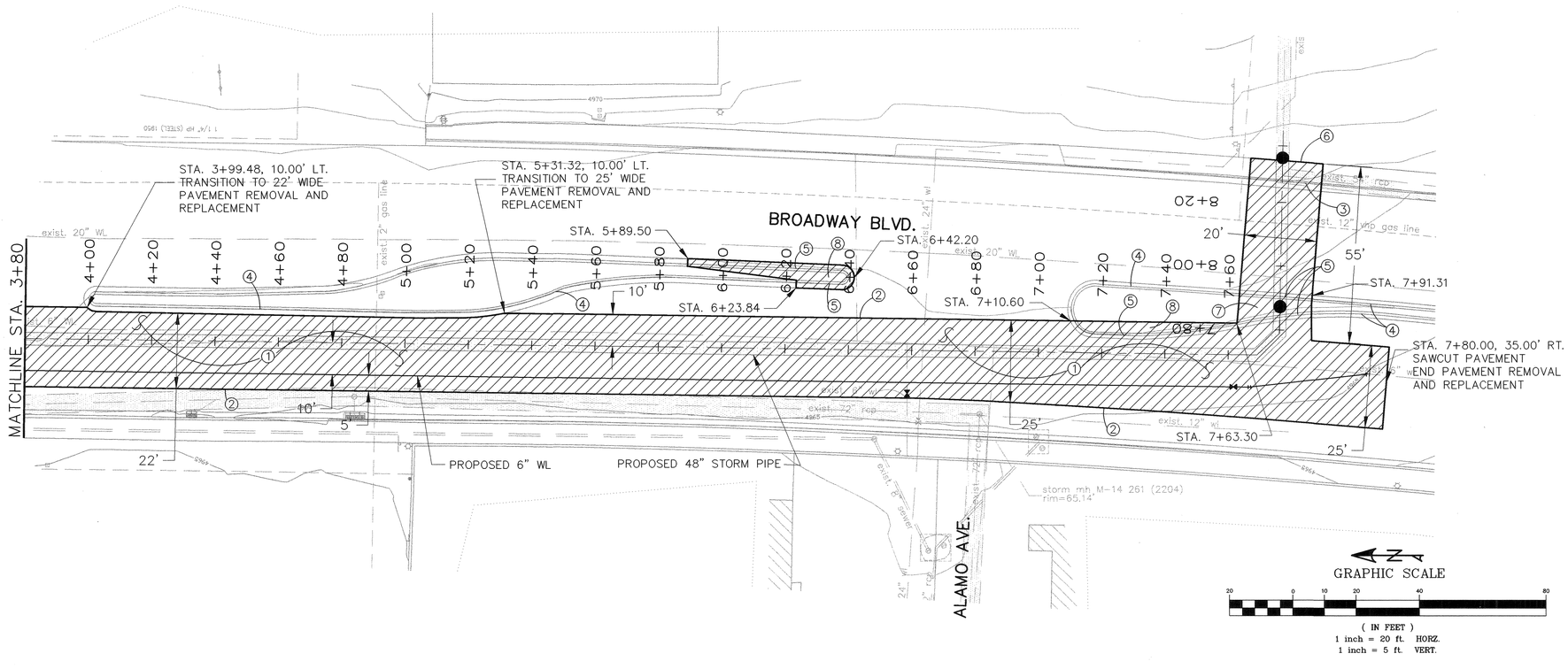

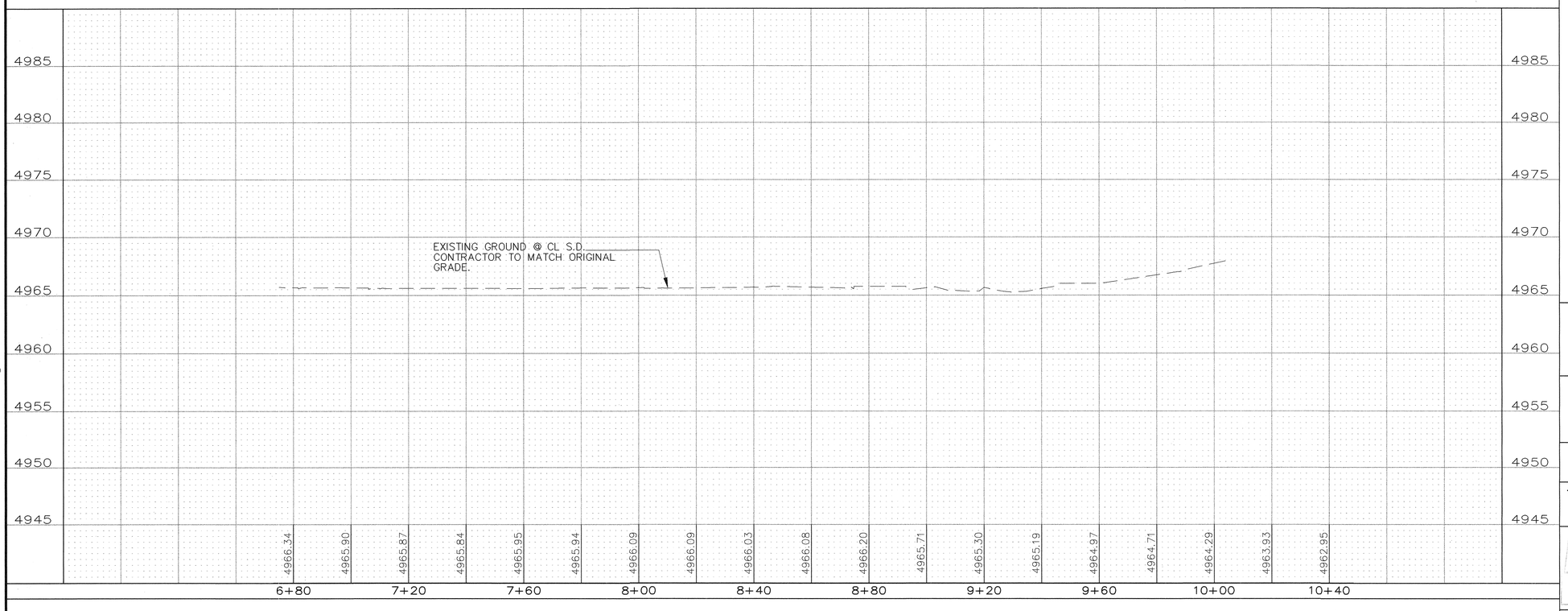

KEYED NOTES

1. REMOVE AND REPLACE ARTERIAL PAVEMENT SEE SHT. 16 of 25 FOR TYPICAL SECTION PER COA STD DWG 2465
2. SAWCUT NEAT LINES IN PAVEMENT BEFORE REMOVAL
3. REMOVE AND REPLACE 20 LF OF EXISTING STANDARD CURB & GUTTER. PER COA STD DWG 2415
4. CONTRACTOR TO PROTECT AND LEAVE IN PLACE EXISTING MEDIAN CURB & GUTTER
5. REMOVE AND REPLACE A TOTAL OF 160 LF OF MEDIAN CURB & GUTTER PER COA STD DWG 2415
6. REMOVE AND REPLACE 20 LF OF EXISTING 6' WIDE SIDEWALK PER COA STD DWG 2430
7. REMOVE AND REPLACE LANDSCAPING BARK INCIDENTAL TO COLORED PATTERNED CONCRETE REMOVAL AND REPLACEMENT
8. REMOVE COLORED-PATTERNED CONCRETE PLACE TEMPORARY PAVING, FOR TRAFFIC CONTROL. REMOVE TEMPORARY PAVING AND REPLACE COLORED-PATTERNED CONCRETE. PAINT MEDIAN NOSE YELLOW.

NOTES

PAY LIMITS FOR PAVEMENT REMOVAL AND REPLACEMENT ARE SHOWN AS DIMENSIONED ON THIS SHEET.

AS BUILT INFORMATION

CONTRACTOR
WORK STAKED BY DATE
SURVEYED BY DATE
ACCEPTANCE BY DATE
FIELD VERIFICATION BY DATE
DRAWINGS CORRECTED BY DATE
MICRO-FILM INFORMATION
RECORDED BY DATE
NO.

BENCH MARKS

ACS BRASS TABLET STAMPED "5-M14 1974"
LOCATED AT THE INTERSECTION OF
BROADWAY BLVD. AND WOODWARD AVE.
X= 381,544.83
Y= 1,473,267.10
G-G = 0.9996800 ΔX = 00° 13' 38"
(NAD 1927/SLD 1929)
ELEVATION = 4937.592

SURVEY INFORMATION

FIELD NOTES

NO.	BY	DATE

ENGINEERS SEAL

NO.	DATE	REMARKS	BY
		REVISIONS	

DESIGN

		DATE
DESIGNED BY	DBT	08/27/03
DRAWN BY	BLN	08/27/03
CHECKED BY	DBT	08/27/03

THOMPSON ENGINEERING CONSULTANTS
CIVIL ENGINEERING SERVICES
PHONE-(505)271-2199 FAX-(505)237-8422

Smith Engineering Company
A Full Service Engineering Company
6400 Uptown Boulevard, N.E. Suite 500S Albuquerque, New Mexico 87110

CITY OF ALBUQUERQUE
PUBLIC WORKS DEPARTMENT
ENGINEERING DEVELOPMENT GROUP

TITLE: MECHEM STORM DRAIN AND DETENTION BASIN
PAVING PLAN AND PROFILE BROADWAY BLVD. STA. 3+80 to E.O.P.,

Design Review Committee: APPROVED SEP 1 2 2003 DESIGN REVIEW COMMITTEE

City Engineer Approval: APPROVED SEP 1 2 2003 CITY ENGINEER

Last Design Update | Mo. / Day / Yr. | Mo. / Day / Yr.

City Project No.	Zone Map No.	Sheet No.	Drawing No.
682502	M-14		13 of 25

Z:\PROJECTS\SOUTH BROADWAY (MECHAM)\PLANSET-95X12.BROAD-PAVE.DWG 9-5-03 9:26:08 am EST

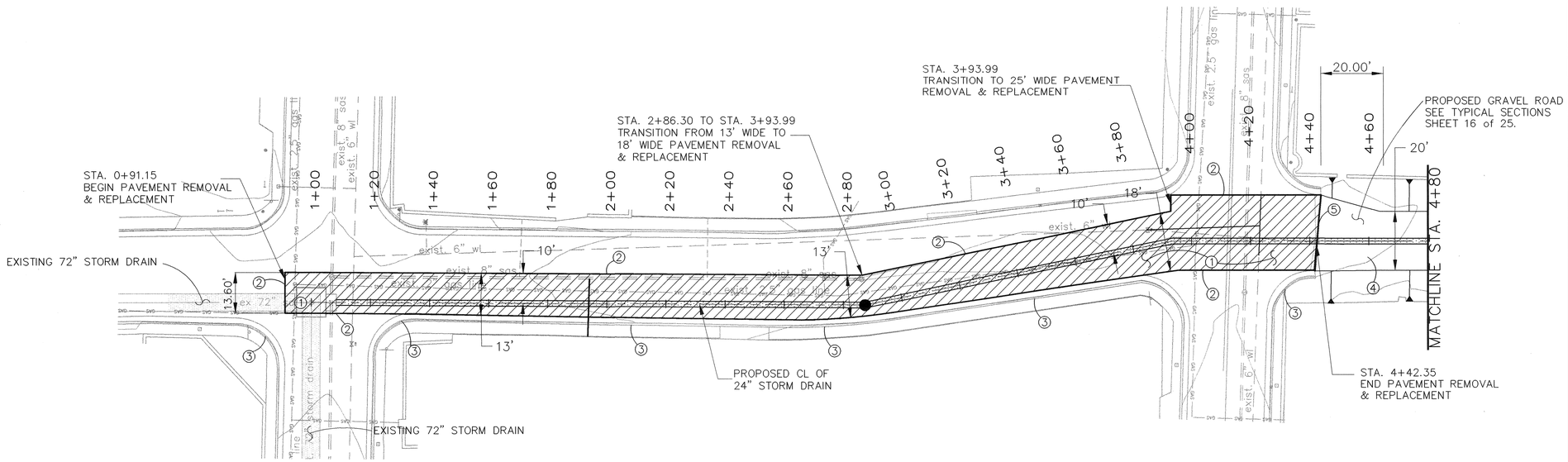

MECHEM ST. STA. 1+00 TO 4+80 - PAVING PLAN

GRAPHIC SCALE

20 0 10 20 40 80

(IN FEET)
1 inch = 20 ft. HORZ.
1 inch = 5 ft. VERT.

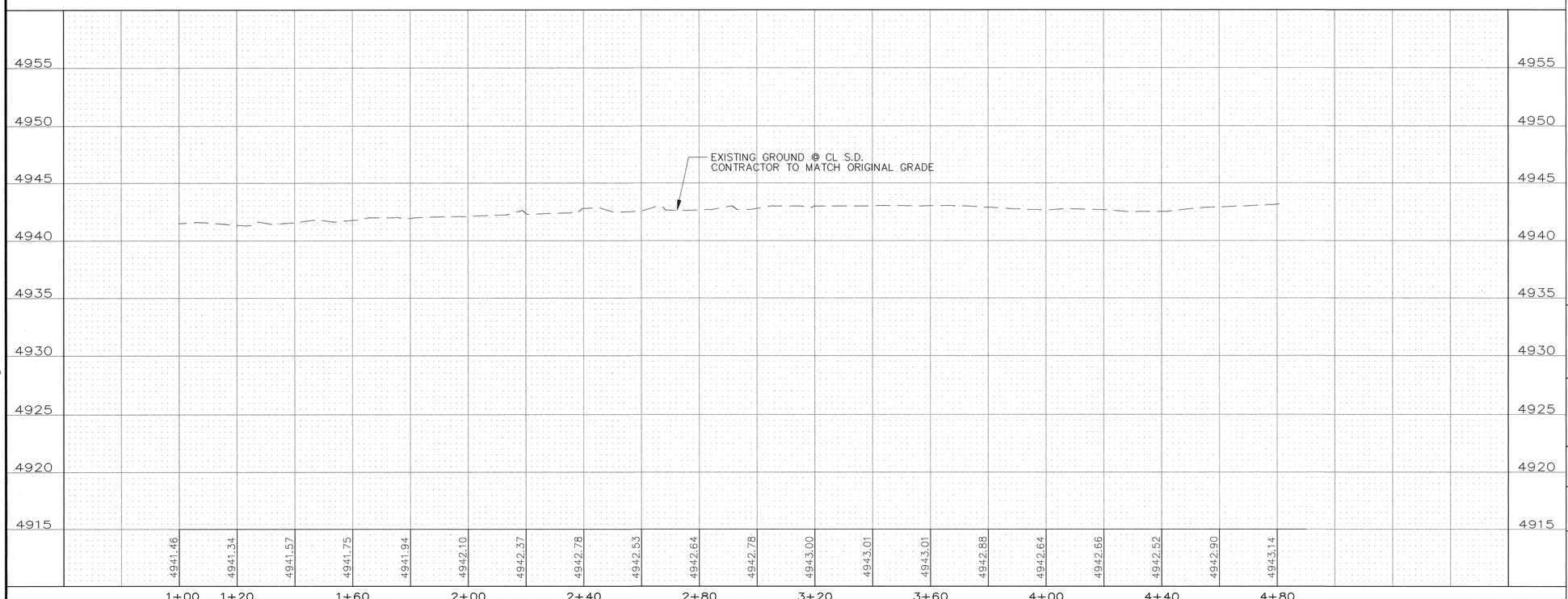

KEYED NOTES

1. REMOVE AND REPLACE RESIDENTIAL PAVEMENT SEE SHT. 16 FOR TYPICAL SECTION PER COA STD DWG 2465
2. SAWCUT NEAT LINES IN PAVEMENT BEFORE REMOVAL
3. CONTRACTOR TO PROTECT AND LEAVE IN PLACE STANDARD CURB & GUTTER.
4. INSTALL 6" GRAVEL SURFACE OVER 12" COMPACTED SUBGRADE. SEE SHT. 16 FOR TYPICAL SECTION.
5. BUILD CONCRETE CUT-OFF WALL FROM GUTTER TO GUTTER PER COA STD DWG. 2415

NOTES

PAY LIMITS FOR PAVEMENT REMOVAL AND REPLACEMENT ARE SHOWN AS DIMENSIONED ON THIS SHEET.

THOMPSON ENGINEERING CONSULTANTS
CIVIL ENGINEERING SERVICES
PHONE-(505)271-2199 FAX-(505)237-8422

Smith Engineering Company
A Full Service Engineering Company
5400 Uptown Boulevard, N.E. Suite 500E Albuquerque, New Mexico 87110

CITY OF ALBUQUERQUE
PUBLIC WORKS DEPARTMENT
ENGINEERING DEVELOPMENT GROUP

TITLE: MECHEM STORM DRAIN AND DETENTION BASIN
PAVING PLAN AND PROFILE MECHEM ST. STA. 1+00 TO 5+40

Design Review Committee: APPROVED SEP 12 2003 DESIGN REVIEW COMMITTEE

City Engineer Approval: APPROVED SEP 12 2003 CITY ENGINEER

Last Design Update | Mo. / Day / Yr. | Mo. / Day / Yr.

City Project No.	Zone Map No.	Sheet No.	Drawing No.
682502	M-14		14 of 25

AS BUILT INFORMATION
CONTRACTOR
WORK STAKED BY DATE
INSPECTOR'S ACCEPTANCE BY DATE
FIELD VERIFICATION BY DATE
DRAWINGS CORRECTED BY DATE
MICRO-FILM INFORMATION
RECORDED BY DATE
NO.

BENCH MARKS
ACS BRASS TABLET STAMPED "5-M14 1974"
LOCATED AT THE INTERSECTION OF
BROADWAY BLVD. AND WOODWARD AVE.
X= 381,544.83
Y= 1,473,267.10
G-G = 0.9996800 ΔX = 00° 13' 38"
(NAD 1927/SLD 1929)
ELEVATION = 4937.592

SURVEY INFORMATION
FIELD NOTES

NO.	BY	DATE

ENGINEERS SEAL

REVISIONS

NO.	DATE	REMARKS	BY

DESIGN

		DATE
DESIGNED BY	DBT	08/27/03
DRAWN BY	BLN	08/27/03
CHECKED BY	DBT	08/27/03

Z:\PROJECTS\SOUTH BROADWAY (MECHAM)\PLANSET-95X13_WEST-PAVE.DWG 9-5-03 9:31:30 am EST

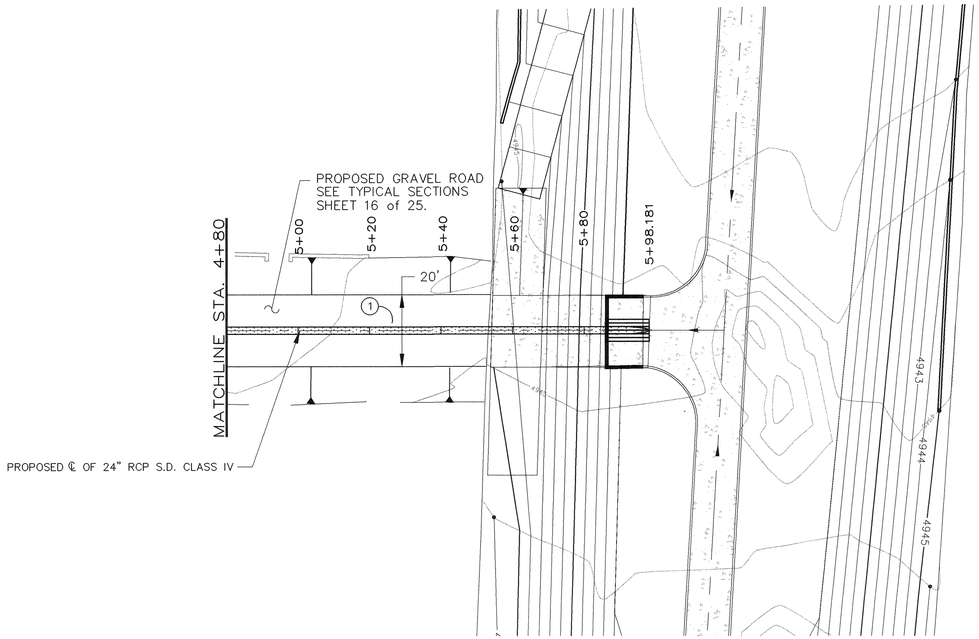

MECHEM ST. STA. 4+80 TO 5+98.18 - PAVING PLAN

GRAPHIC SCALE

20 0 10 20 40 80

(IN FEET)
1 inch = 20 ft. HORZ.
1 inch = 5 ft. VERT.

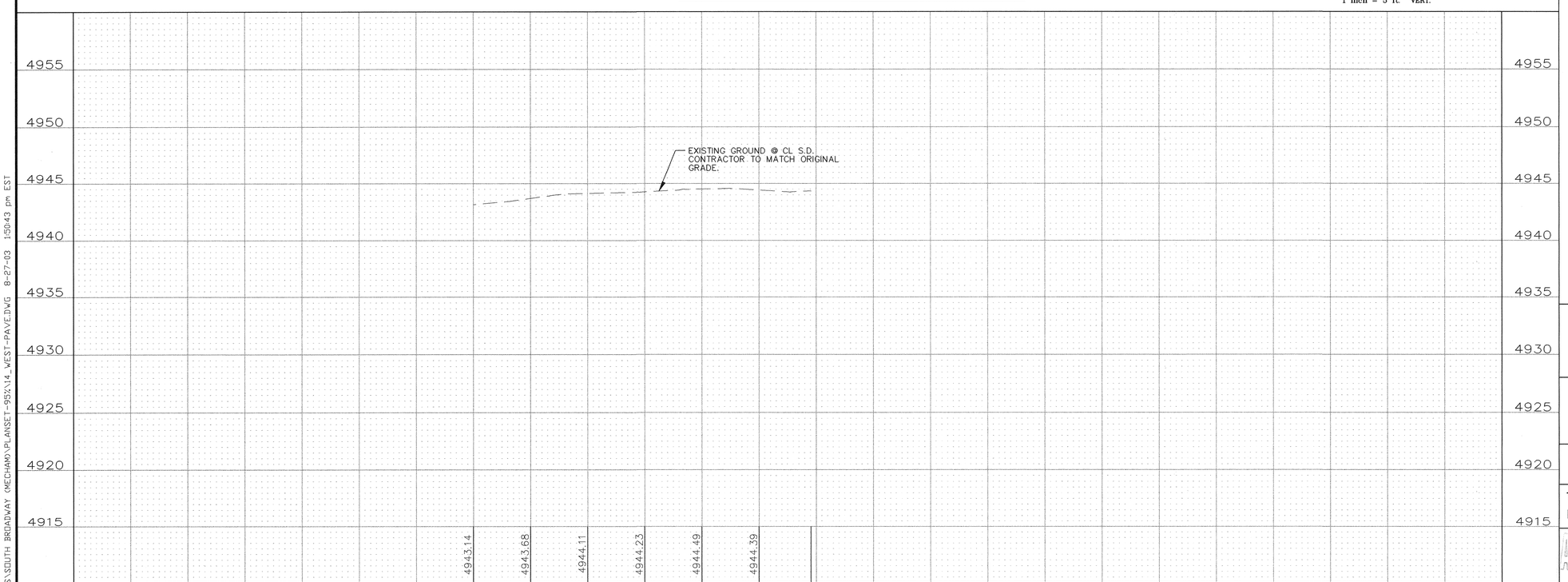

KEYED NOTES

1. INSTALL 6" GRAVEL SURFACE OVER 12" COMPACTED SUBGRADE. SEE SHEET 16 FOR TYPICAL SECTION.

THOMPSON ENGINEERING CONSULTANTS
CIVIL ENGINEERING SERVICES
PHONE-(505)271-2199 FAX-(505)237-8422

Smith Engineering Company
A Full Service Engineering Company
6400 Uptown Boulevard, N.E. Suite 500E Albuquerque, New Mexico 87110

CITY OF ALBUQUERQUE
PUBLIC WORKS DEPARTMENT
ENGINEERING DEVELOPMENT GROUP

TITLE: MECHEM STORM DRAIN AND DETENTION BASIN
PAVING PLAN AND PROFILE MECHEM ST. 5+40 TO DETENTION BASIN

Design Review Committee: APPROVED SEP 12 2003 DESIGN REVIEW COMMITTEE

City Engineer Approval: APPROVED SEP 12 2003 CITY ENGINEER

Last Design Update | No. / Day / Yr. | No. / Day / Yr.

City Project No. 682502 | Zone Map No. M-14 | Sheet No. | Drawing No. 15 of 25

AS BUILT INFORMATION
CONTRACTOR
WORK STAKED BY | DATE
INSPECTOR'S ACCEPTANCE BY | DATE
FIELD VERIFICATION BY | DATE
DRAWINGS CORRECTED BY | DATE
MICRO-FILM INFORMATION
RECORDED BY | DATE
NO.

BENCH MARKS
ACS BRASS TABLET STAMPED "5-M14 1974"
LOCATED AT THE INTERSECTION OF
BROADWAY BLVD. AND WOODWARD A.VE.
X= 381,544.83
Y= 1,473,267.10
G-G = 0.9996800 ΔX = 00° 13' 38"
(NAD 1927/SLD 1929)
ELEVATION = 4937.592

SURVEY INFORMATION
FIELD NOTES

NO.	BY	DATE

ENGINEERS SEAL

REVISIONS

NO.	DATE	REMARKS	BY

DESIGN

		DATE
DESIGNED BY	DBT	08/27/03
DRAWN BY	BLN	08/27/03
CHECKED BY	DBT	08/27/03

Z:\PROJECTS\SOUTH BROADWAY (MECHAM)\PLANSET-95\14_WEST-PAVE.DWG 8-27-03 1:50:43 pm EST

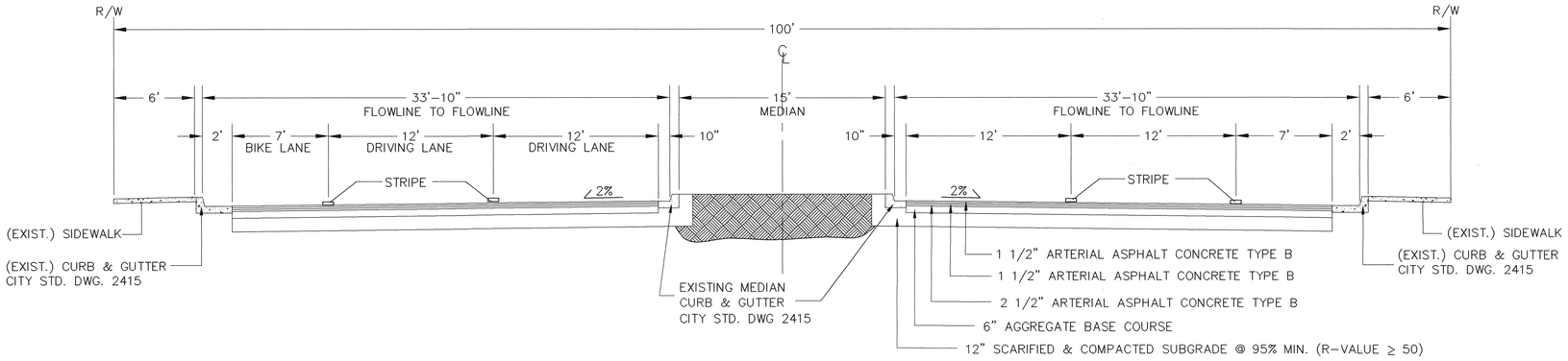

EXISTING BROADWAY BLVD.

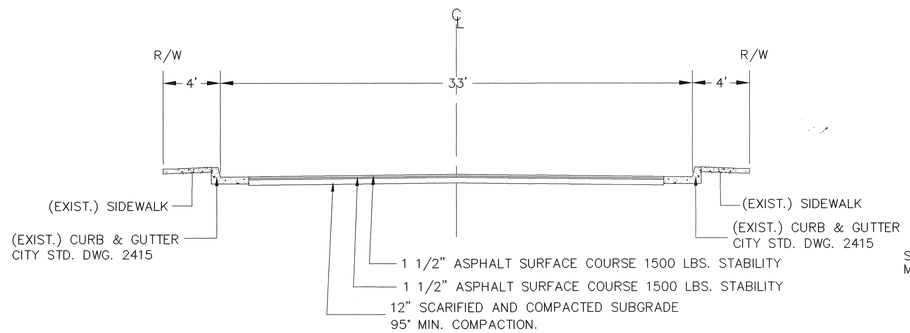

EXISTING MECHEM STREET

STATION 1+00 TO 4+40

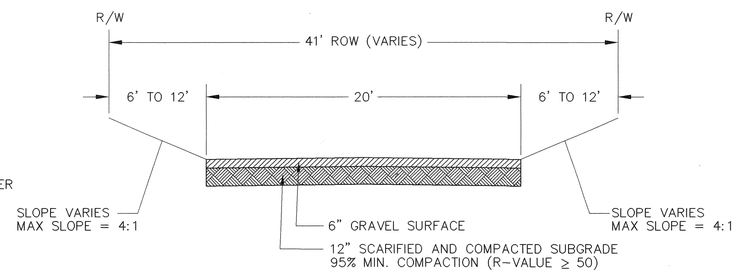

PROPOSED MECHEM STREET – (GRAVEL SURFACE)

STATION 4+40 TO 5+53

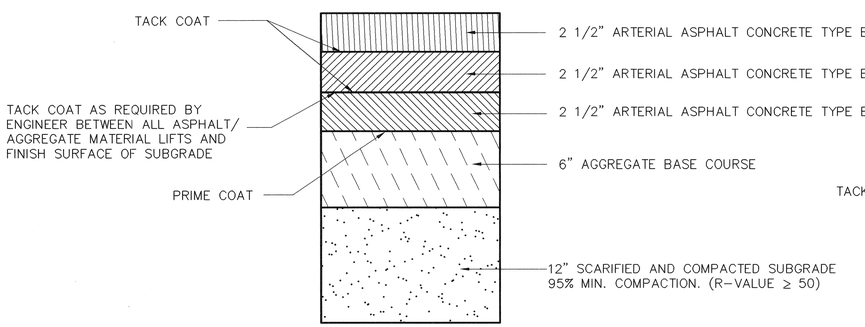

PAVEMENT SECTION

BROADWAY BLVD.

N.T.S.

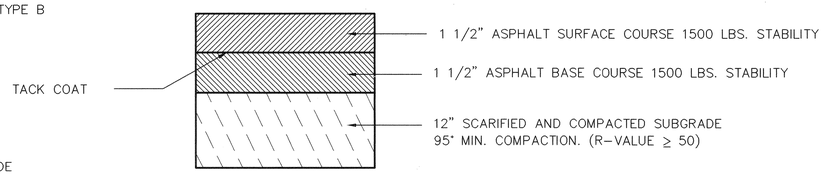

PAVEMENT SECTION

MECHEM STREET

N.T.S.

THOMPSON ENGINEERING CONSULTANTS
CIVIL ENGINEERING SERVICES
PHONE-(505)271-2199 FAX-(505)237-8422

Smith Engineering Company
A Full Service Engineering Company
6400 Uptown Boulevard, N.E. Suite 500E Albuquerque, New Mexico 87110

CITY OF ALBUQUERQUE
PUBLIC WORKS DEPARTMENT
ENGINEERING DEVELOPMENT GROUP

TITLE: MECHEM STORM DRAIN AND DETENTION BASIN
TYPICAL STREET SECTIONS

Design Review Committee: APPROVED SEP 12 2003 DESIGN REVIEW COMMITTEE

City Engineer Approval: APPROVED SEP 12 2003 CITY ENGINEER

Last Design Update | Mo. / Day / Yr. | Mo. / Day / Yr.

City Project No.	Zone Map No.	Sheet No.	Drawing No.
682502	M-14		16 of 25

NO.	DATE	REMARKS	BY
		REVISIONS	
		DESIGN	

DESIGNED BY DBT DATE 08/27/03
DRAWN BY BLN DATE 08/27/03
CHECKED BY DBT DATE 08/27/03

ENGINEERS SEAL

AS BUILT INFORMATION

CONTRACTOR
WORK STAKED BY DATE
WORK INSPECTED BY DATE
ACCEPTANCE BY DATE
FIELD VERIFICATION BY DATE
DRAWINGS CORRECTED BY DATE
MICRO-FILM INFORMATION
RECORDED BY DATE
NO.

BENCH MARKS
ACS BRASS TABLET STAMPED "5-M14 1974"
LOCATED AT THE INTERSECTION OF
BROADWAY BLVD. AND WOODWARD AVE.
X= 381,544.83
Y= 1,473,267.10
G-G = 0.9996800 ΔX = 00° 13' 38"
(NAD 1927/SLD 1929)
ELEVATION = 4937.592

SURVEY INFORMATION

NO.	BY	DATE

FIELD NOTES

Z:\PROJECTS\SOUTH BROADWAY (MECHAMO)\PLANSET-95%\15 TYPICAL-SEC.DWG 9-5-03 9:36:42 am EST

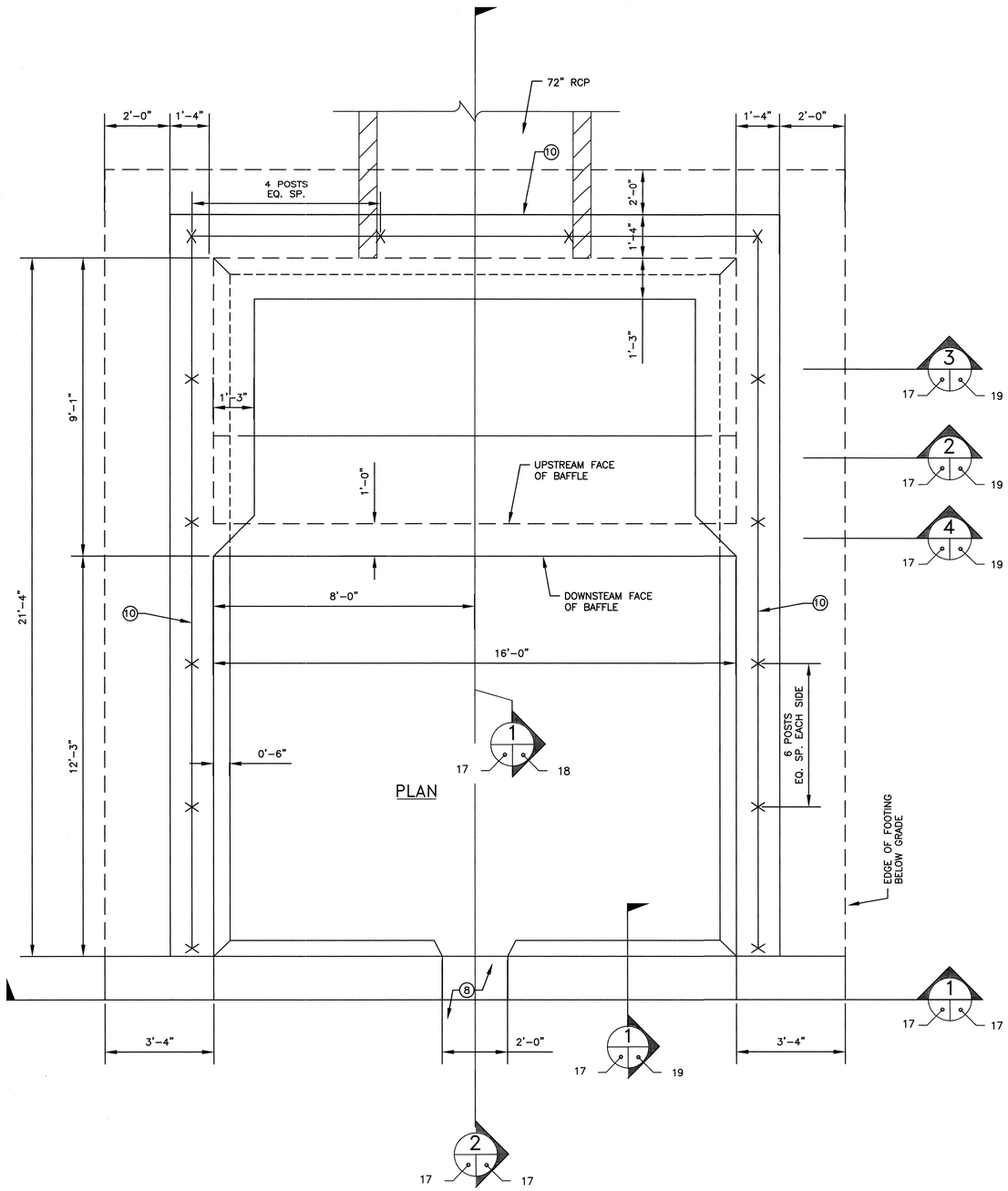

PLAN

ENERGY DISSIPATOR PLAN VIEW

SCALE: 1/2"=1'-0"

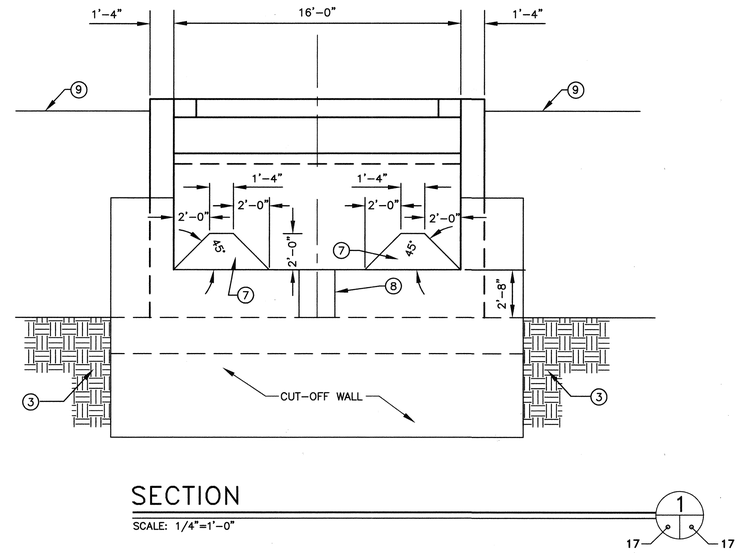

SECTION

SCALE: 1/4"=1'-0"

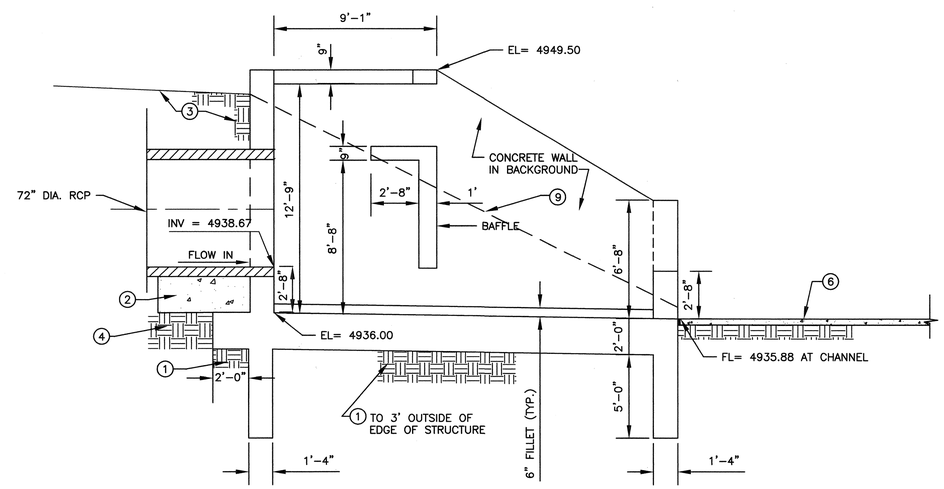

SECTION

SCALE: 1/4"=1'-0"

KEYED NOTES:

1. 36-INCHES OVER ESCAVATION FILL COMPACTED TO 95% ASTM D-1557. COMPACT SUBGRADE UNDER FILL TO 90% ASTM D-1557.
2. PIPE SUPPORT PER NOTE A, COA STD DWG 2101.
3. BACKFILL COMPACTED PER COA STD SPECIFICATIONS.
4. SUBGRADE PREP PER STD DTL. 2271.
5. NOT USED.
6. LOW FLOW CHANNEL. SEE DETAIL SHEET 11.
7. BAFFLE WALL OPENING.
8. END SILL OPENING.
9. GRADE BEYOND STRUCTURE.
10. INSTALL 4' HIGH CHAINLINK FENCE WITH POST SPACING AS SHOWN. SEE DETAIL A/19 FOR POST CONNECTION TO STRUCTURE. FENCE INSTALLATION PER COA STD. DWG. 2252. TACK WELD FABRIC TO SUPPORT POSTS. SET POSTS VERTICAL IN WALL.

AS BUILT INFORMATION

CONTRACTOR
WORK STAKED BY — DATE
INSPECTOR'S ACCEPTANCE BY — DATE
FIELD VERIFICATION BY — DATE
DRAWINGS CORRECTED BY — DATE

MICRO-FILM INFORMATION
RECORDED BY — DATE
NO.

BENCH MARKS

ACS BRASS TABLET STAMPED "5-M14 1974" LOCATED AT THE INTERSECTION OF BROADWAY BLVD AND WOODWARD AVE

ELEVATION = 4937.592 Ft.
PLANE COORDINATES: NORTHING = 1473267.1
EASTING = 381544.83
GROUND TO GRID FACTOR: 0.9996800

SURVEY INFORMATION

FIELD NOTES

NO.	BY	DATE
11599	STEVE TOLER	2003

ENGINEERS SEAL

PATRICK T. CONLEY NEW MEXICO (10141) LICENSED PROFESSIONAL ENGINEER
9/18/03

NO.	DATE	REMARKS	BY

REVISIONS

DESIGN

		DATE
DESIGNED BY	PJC	03/03
DRAWN BY	SEC	03/03
CHECKED BY	PJC	03/03

103100-MechemSD
Smith Engineering Company
A Full Service Engineering Company
6400 Uptown Boulevard, N.E. Suite 500E Albuquerque, New Mexico 87110

CITY OF ALBUQUERQUE
PUBLIC WORKS DEPARTMENT
ENGINEERING DEVELOPMENT GROUP

TITLE: MECHEM STORM DRAIN AND DETENTION BASIN
ENERGY DISSIPATOR LAYOUT

Design Review Committee: APPROVED SEP 12 2003 DESIGN REVIEW COMMITTEE
City Engineer Approval: APPROVED SEP 12 2003 CITY ENGINEER
Last Design Update — No. / Day / Yr. — No. / Day / Yr.

City Project No.	Zone Map No.	Sheet No.	Drawing No.
6825.91	M-14		17 of 25

P:\Projects\103100-MechemSD\Cadd\

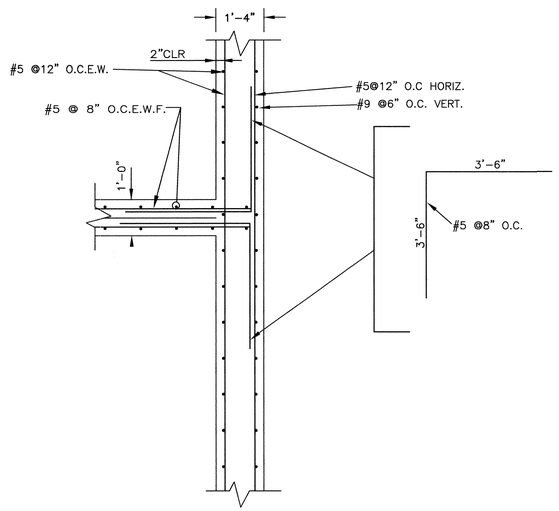

REINFORCING DETAIL

SCALE: 1/2"=1'-0"

A 19 18

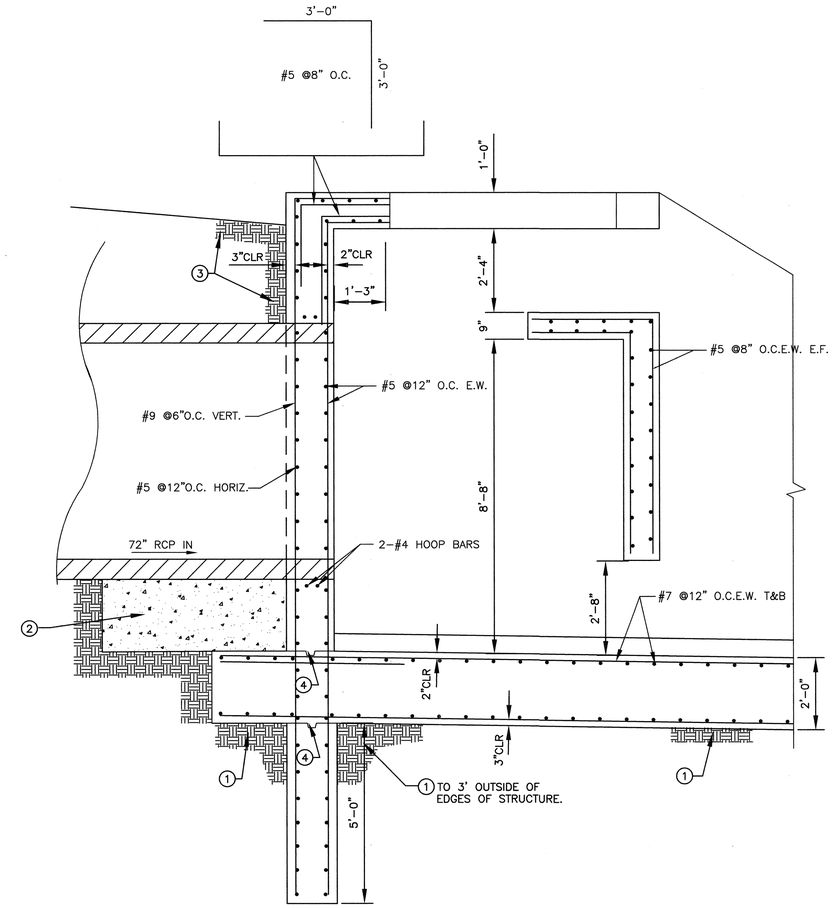

SECTION

SCALE: 1/2"=1'-0"

1 17 18

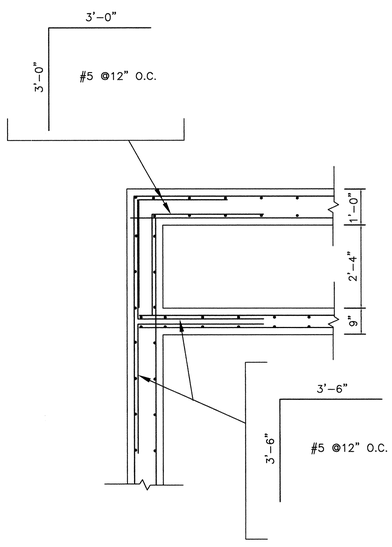

REINFORCING DETAIL

N.T.S

B 19 18

KEYED NOTES:

1. 36-INCHES OVER ESCAVATION AND FILL COMPACTED TO 95% ASTM D-1557. COMPACT SUBGRADE UNDER FILL TO 90% ASTM D-1557.
2. PIPE SUPPORT PER NOTE A, COA STD DWG 2101.
3. BACKFILL COMPACTED PER COA STD SPECIFICATIONS.
4. 2" x 4" KEYED CONSTRUCTION JOINT, TYPICAL.

AS BUILT INFORMATION

CONTRACTOR	
WORK STAKED BY	DATE
INSPECTOR'S ACCEPTANCE BY	DATE
FIELD VERIFICATION BY	DATE
DRAWINGS CORRECTED BY	DATE

MICRO-FILM INFORMATION

RECORDED BY	DATE
NO.	

BENCH MARKS

ACS BRASS TABLET STAMPED "5-M14 1974" LOCATED AT THE INTERSECTION OF BROADWAY BLVD AND WOODWARD AVE

ELEVATION = 4937.592 Ft.

PLANE COORDINATES: NORTHING = 1473267.1
EASTING = 381544.83

GROUND TO GRID FACTOR: 0.9996800

SURVEY INFORMATION

FIELD NOTES

NO.	BY	DATE
11599	STEVE TOLER	2003

ENGINEERS SEAL

PATRICK T. CONLEY NEW MEXICO 10141 LICENSED PROFESSIONAL ENGINEER

9/18/03

NO.	DATE	REMARKS	BY

REVISIONS

DESIGN

DESIGNED BY	PJC	DATE 03/03
DRAWN BY	SEC	DATE 03/03
CHECKED BY	PJC	DATE 03/03

103100-MechemSD
Smith Engineering Company
A Full Service Engineering Company
6400 Uptown Boulevard, N.E. Suite 500E Albuquerque, New Mexico 87110

CITY OF ALBUQUERQUE
PUBLIC WORKS DEPARTMENT
ENGINEERING DEVELOPMENT GROUP

TITLE: MECHEM STORM DRAIN AND DETENTION BASIN
ENERGY DISSIPATER DETAIL SHEET #1

Design Review Committee: APPROVED SEP 12 2003 DESIGN REVIEW COMMITTEE

City Engineer Approval: APPROVED SEP 12 2003 CITY ENGINEER

Last Design Update | No. / Day / Yr. | No. / Day / Yr.

City Project No.	Zone Map No.	Sheet No.	Drawing No.
6825.91	M-14		18 of 25

Z:\Projects\103100-MechemSD\cad\JOB103.DWG

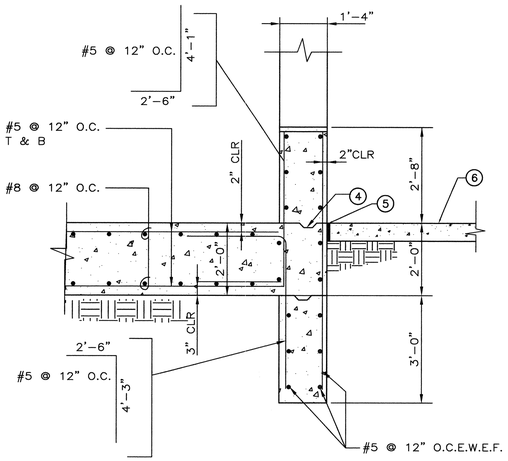

SECTION @ SILL – CUTOFF WALL (1/1)

SCALE: 1/2"=1'-0"

17 — 19

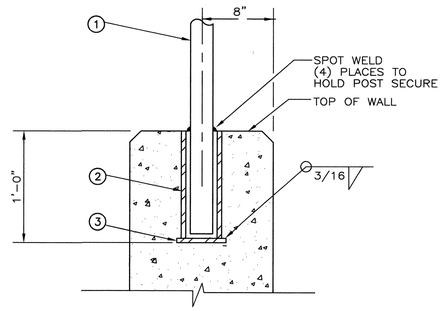

FENCE POST CONNECTION (A)

SCALE: 1-1/2"=1'-0"

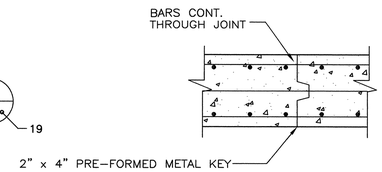

TYPICAL CONTROL JOINT (B)

NOT TO SCALE

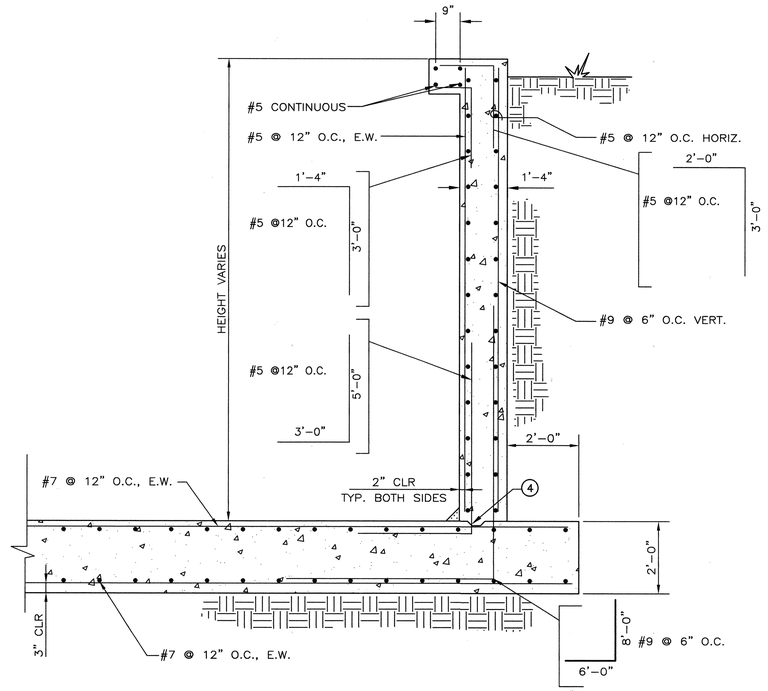

SECTION @ SIDEWALL (3/1)

SCALE: 1/2"=1'-0"

17 — 19

O KEYED NOTES:

1. PIPE 2 1/2" STD. FOR CORNER POST OR PIPE 2" STD. FOR FIELD POST.
2. PIPE 3 1/2" STD. FOR CORNER POST OR PIPE 3" STD. FOR FIELD POST.
3. ∠ 1/4 x 4-1/2 x 0'-4.5"
4. 2"x4" KEY CONSTRUCTION JOINT, TYPICAL
5. 1/2" EXPANSION JOINT AND SEALANT PER COA STD DWG 2260, NOTE A.
6. LOW FLOW CHANNEL. SEE DETAIL SHEET 11.

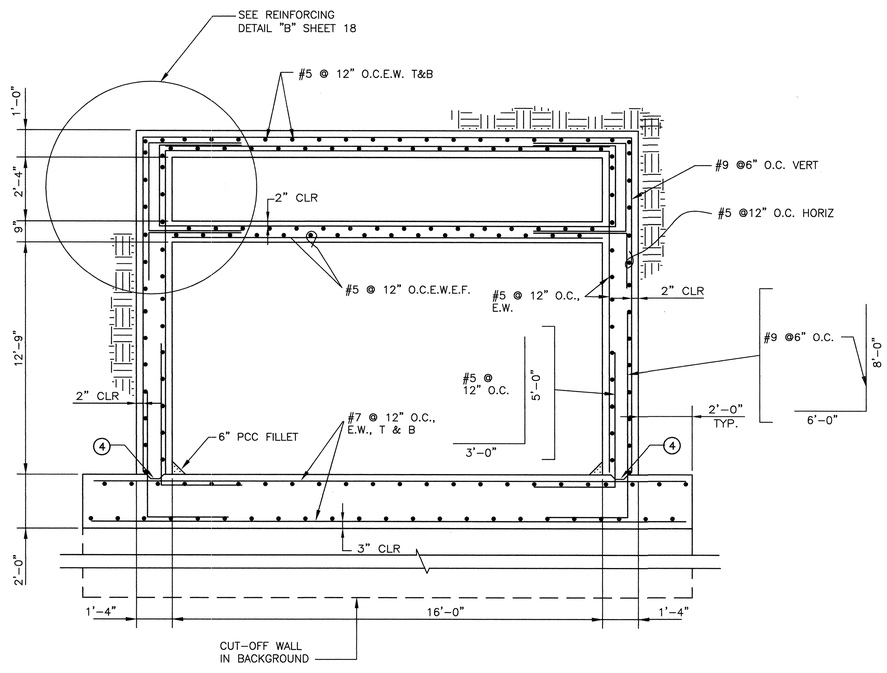

SECTION (2/1)

SCALE: 3/8"=1'-0"

17 — 19

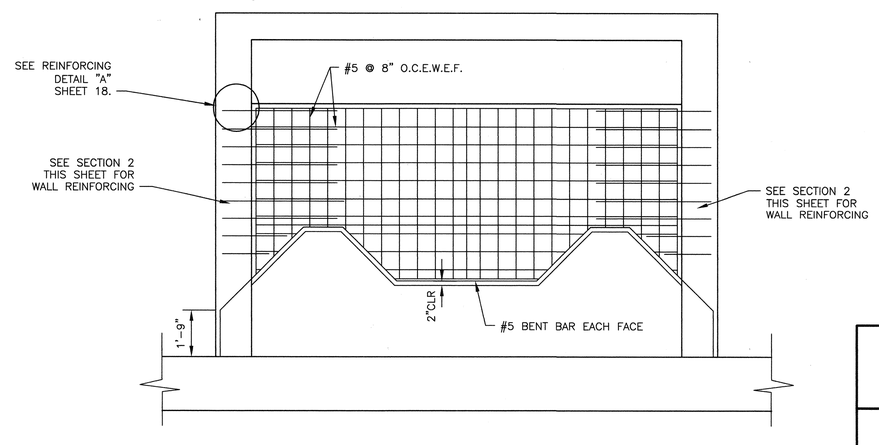

SECTION @ BAFFLE (4/1)

SCALE: 3/8"=1'-0"

17 — 19

AS BUILT INFORMATION

CONTRACTOR	
STAKED BY	DATE
INSPECTOR'S ACCEPTANCE BY	DATE
FIELD VERIFICATION BY	DATE
DRAWINGS CORRECTED BY	DATE

MICRO-FILM INFORMATION

RECORDED BY	DATE
NO.	

BENCH MARKS

ACS BRASS TABLET STAMPED "5-M14 1974" LOCATED AT THE INTERSECTION OF BROADWAY BLVD AND WOODWARD AVE

ELEVATION = 4937.592 Ft.

PLANE COORDINATES: NORTHING = 1473267.1
EASTING = 381544.83

GROUND TO GRID FACTOR: 0.9996800

SURVEY INFORMATION

FIELD NOTES

NO.	BY	DATE
11599	STEVE TOLER	2003

ENGINEERS SEAL

PATRICK J. CONLEY
NEW MEXICO
10141
LICENSED PROFESSIONAL ENGINEER

NO.	DATE	REMARKS	BY
		REVISIONS	

DESIGN

		DATE
DESIGNED BY	PJC	03/03
DRAWN BY	SEC	03/03
CHECKED BY	PJC	03/03

103100-MechemSD
Smith Engineering Company
A Full Service Engineering Company
6400 Uptown Boulevard, N.E. Suite 600E Albuquerque, New Mexico 87110

CITY OF ALBUQUERQUE
PUBLIC WORKS DEPARTMENT
ENGINEERING DEVELOPMENT GROUP

TITLE: MECHEM STORM DRAIN AND DETENTION BASIN

ENERGY DISSIPATER DETAIL SHEET #2

Design Review Committee: APPROVED SEP 12 2003 DESIGN REVIEW COMMITTEE

City Engineer Approval: APPROVED SEP 12 2003

Last Design Update | No. / Day / Yr. | No. / Day / Yr.

City Project No.	Zone Map No.	Sheet No.	Drawing No.
6825.91	M-14		19 of 25

Z:\Projects\103100-MechemSD\cad\061702.dwg

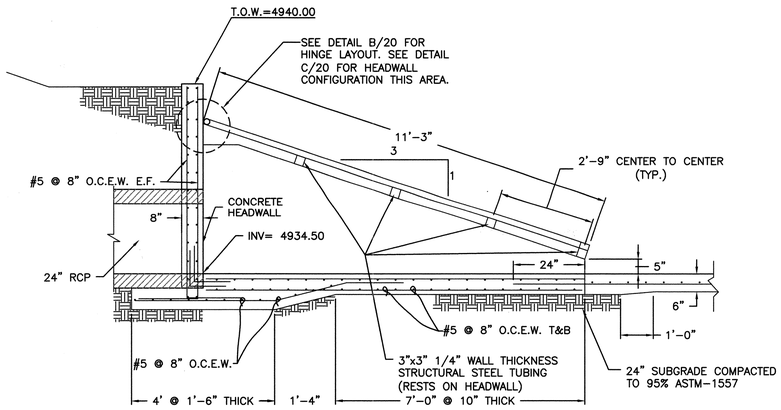

SIDE ELEVATION

SCALE: 1/2" = 1'

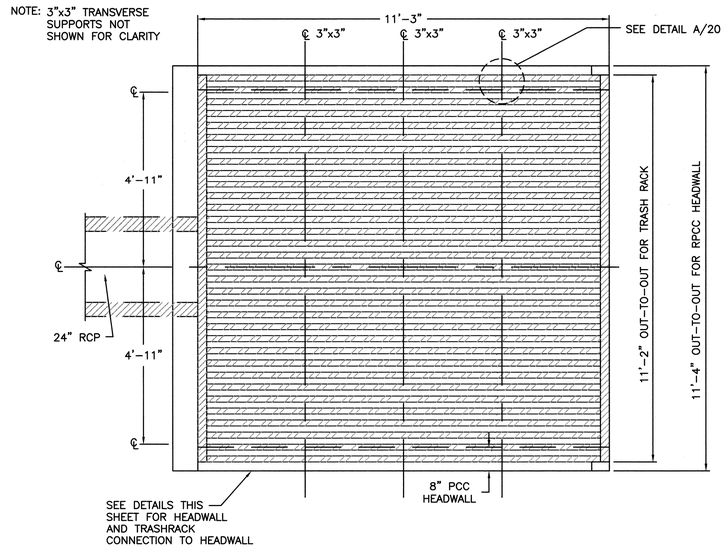

PLAN VIEW

NOT TO SCALE

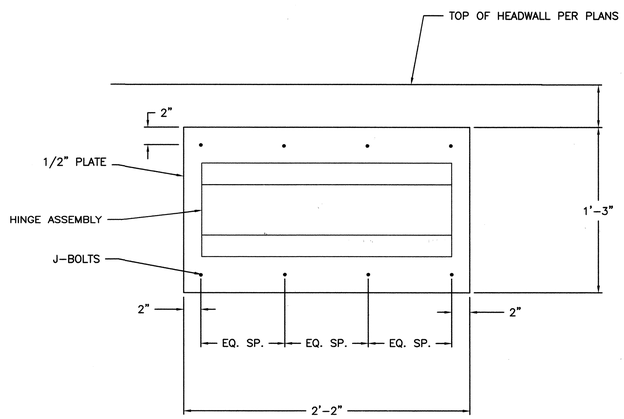

HINGE ASSEMBLY ELEVATION

NTS

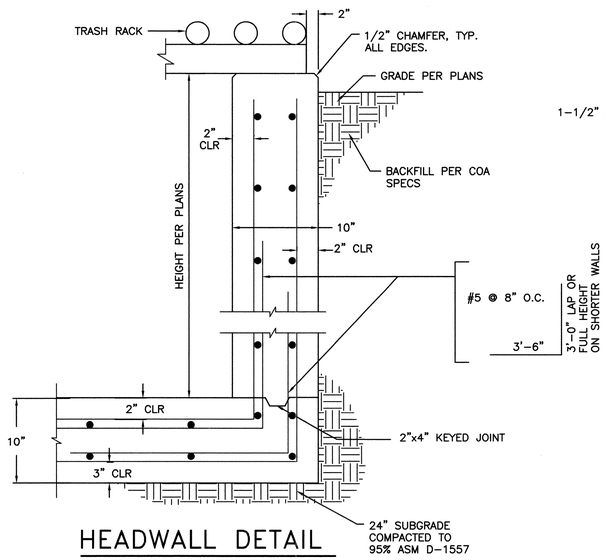

HEADWALL DETAIL

SCALE: NTS

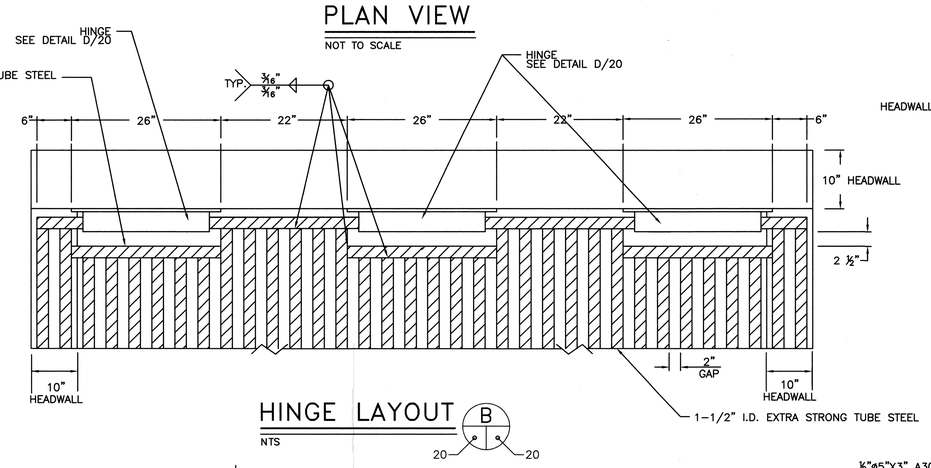

HINGE LAYOUT

NTS

B 20 20

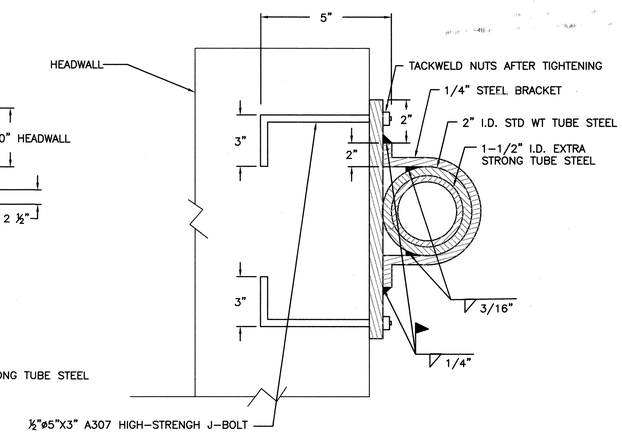

HINGE ASSEMBLY CONNECTION DETAIL

NTS

D 20 20

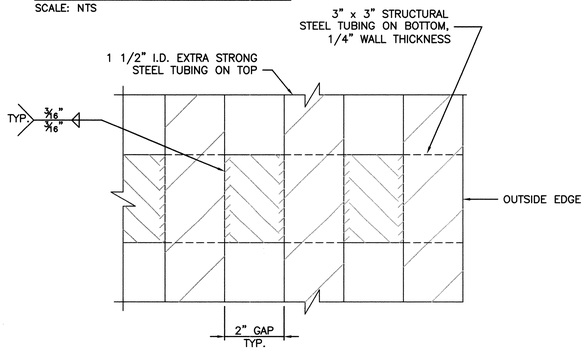

TRASH RACK DETAIL

SCALE: 1" = 2"

A 20 20

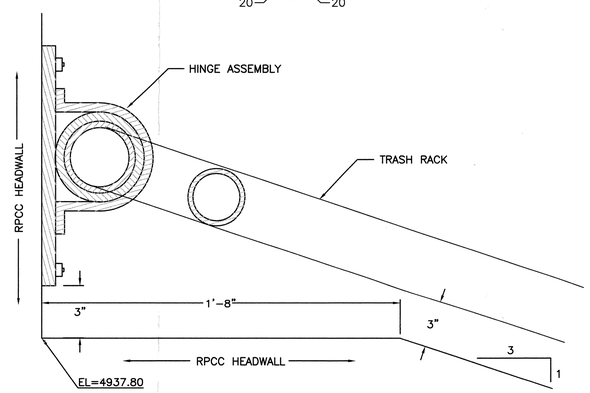

STEP DOWN IN HEADWALL DETAIL

SCALE: 3" = 1'

C 20 20

NOTE: PRIME AND PAINT TRASH RACK WITH ALUMINIZED PAINT PER COA STD. SPECIFICATIONS FOR CATCH BASIN GRATES

AS BUILT INFORMATION

CONTRACTOR		
WORK STAKED BY		DATE
INSPECTOR'S ACCEPTANCE BY		DATE
FIELD VERIFICATION BY		DATE
DRAWINGS CORRECTED BY		DATE

MICRO-FILM INFORMATION

RECORDED BY DATE

NO.

BENCH MARKS

ACS BRASS TABLET STAMPED "5-M14 1974" LOCATED AT THE INTERSECTION OF BROADWAY BLVD AND WOODWARD AVE

ELEVATION = 4937.592 FL.

PLANE COORDINATES: NORTHING = 1473267.1
EASTING = 381544.83

GROUND TO GRID FACTOR: 0.9996800

SURVEY INFORMATION

FIELD NOTES

NO.	BY	DATE
11599	STEVE TOLER	2003

ENGINEERS SEAL

FRANK J. COMLEY NEW MEXICO 10141 LICENSED PROFESSIONAL ENGINEER

REVISIONS

NO.	DATE	REMARKS	BY
A	10/15	MODIFY GRATE DETAILS	PJC

		DATE
DESIGNED BY	PJC	03/03
DRAWN BY	SEC	03/03
CHECKED BY	PJC	03/03

103100-MechemSD

Smith Engineering Company
A Full Service Engineering Company
6400 Uptown Boulevard, N.E. Suite 500E Albuquerque, New Mexico 87110

CITY OF ALBUQUERQUE
PUBLIC WORKS DEPARTMENT
ENGINEERING DEVELOPMENT GROUP

TITLE: MECHEM STORM DRAIN AND DETENTION BASIN
TRASH RACK DETAILS

Design Review Committee: APPROVED OCT 15 2003

City Engineer Approval: APPROVED OCT 15 2003 CITY E

Last Design Update

No. / Day / Yr.	No. / Day / Yr.

City Project No.	Zone Map No.	Sheet No.	Drawing No.
6825.91	M-14		20 of 25

ADD'm #1

Z:\Projects\103100-Mechem\SD\cad\M20A.DWG

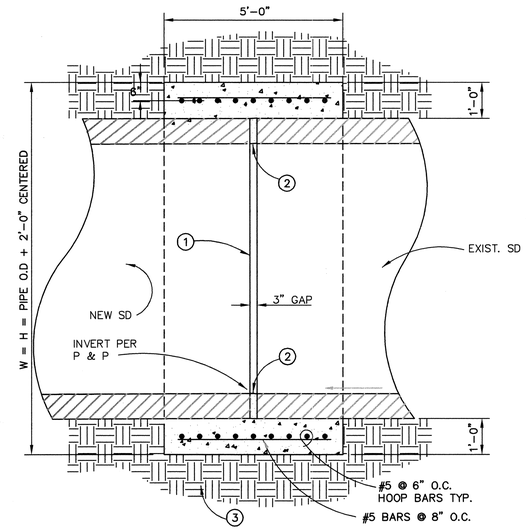

RPCC COLLAR

SCALE: 1/2"=1'-0"

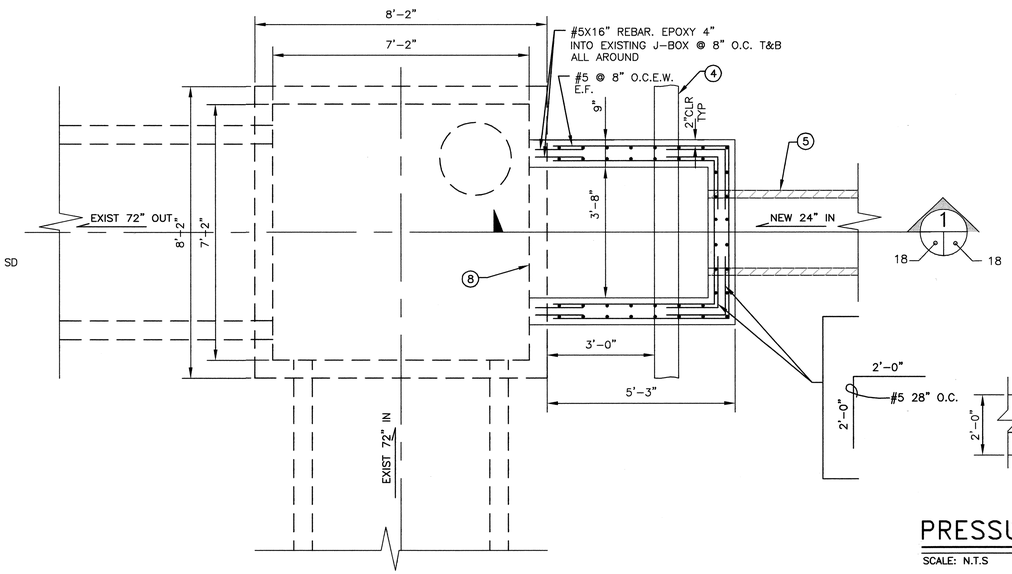

MECHEM/ALAMO J-BOX MODIFICTION: PLAN VIEW

SCALE: 1/2"=1'-0"

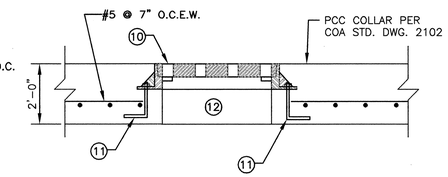

PRESSURE MANHOLE LID DETAIL

SCALE: N.T.S

KEYED NOTES:

1. IF REQUIRED SAWCUT PIPE AND REPLACE SUCH THAT GAP BETWEEN PIPE IS 3"±.
2. AFTER CONSTRUCTION OF COLLAR, FILL 3" GAP WITH GOOD PSI EPOXY GROUT. FINISH SMOOTH TO MATCH INTERIOR FINISH OF PIPE.
3. 12" SUBGRADE COMPACTED TO 95% ASTM D-1557.
4. NEW DUCTILE IRON SAS LINE, SEE PLAN AND PROFILE SHEET 8 FOR INVERTS AND LENGTH.
5. NEW 24" RCP STORM DRAIN. SEE PLAN AND PROFILE SHEET 5.
6. 24" COMPACTED FILL @ 95% ASTM D-1557 OVER 12" SUBGRADE @ 90% ASTM D-1557.
7. BACKFILL PER COA STD. SPECS.
8. SAWCUT EXISTING J-BOX FOR NEW CONSTRUCTION. BPOXY EXISTING 3"ø
9. PIPE SUPPORT PER NOTE A COA STD DWG 2101.
10. MANHOLE RING AND LID. USE BOLTED AND VENTED MANHOLE COVER.
11. 7"x7" J-BOLT SET IN CONCRETE. HOOK LEGS UNDER HORIZONTAL STEEL IN BOTTOM MAT. SET AT 90° INTERVALS AROUND PERIMETER OF MANHOLE RING.
12. 1'-10 3/4" ROUND OPENING ON MANHOLES USING PRESSURE LIDS.

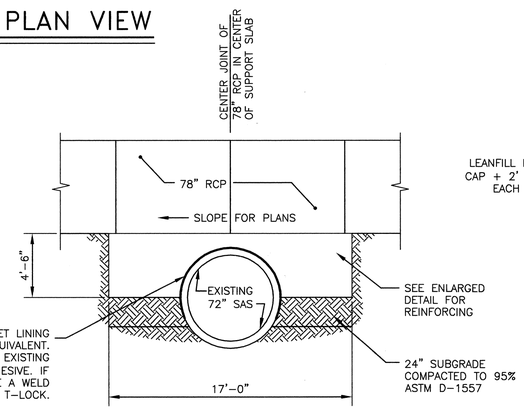

RPCC CAP LONGITUDINAL DETAIL

SCALE: 1" = 5'

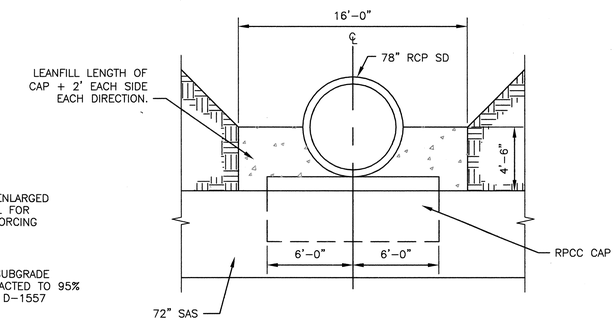

RPCC CAP TRANSVERSE DETAIL

SCALE: 1" = 5'

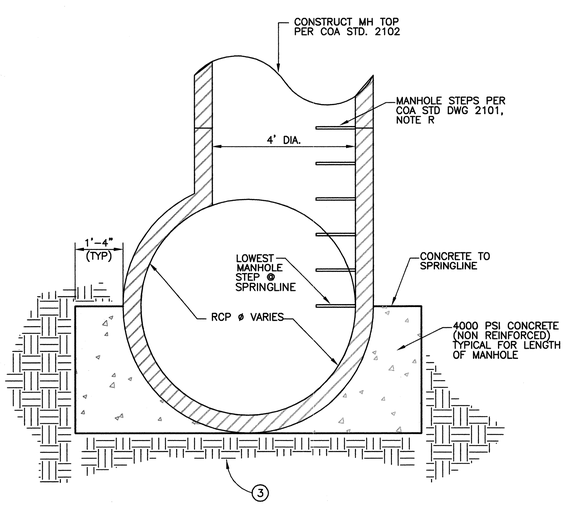

PRECAST MANHOLE SUPPORT SADDLE

SCALE: 1/2"=1'-0"

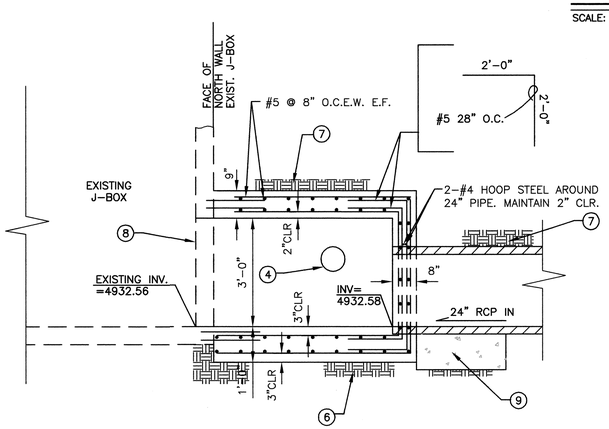

SECTION

SCALE: 1/2"=1'-0"

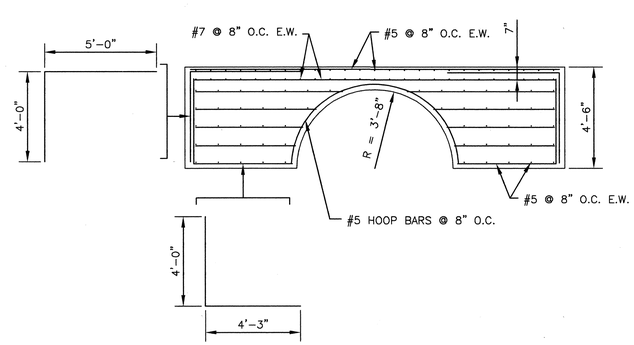

RPCC CAP REINFORCING

SCALE: 3/8" = 1'-0"

AS BUILT INFORMATION
CONTRACTOR — DATE
WORK STAKED BY — DATE
INSPECTOR ACCEPTANCE BY — DATE
FIELD VERIFICATION BY — DATE
DRAWINGS CORRECTED BY — DATE
MICRO-FILM INFORMATION
RECORDED BY — DATE
NO.

BENCH MARKS
ACS BRASS TABLET STAMPED "5-M14 1974" LOCATED AT THE INTERSECTION OF BROADWAY BLVD AND WOODWARD AVE
ELEVATION = 4937.592 Ft.
PLANE COORDINATES: NORTHING = 1473267.1
EASTING = 381544.83
GROUND TO GRID FACTOR: 0.9996800

SURVEY INFORMATION
FIELD NOTES

NO.	BY	DATE
11599	STEVE TOLER	2003

ENGINEERS SEAL
NEW MEXICO LICENSED PROFESSIONAL ENGINEER (9141) STEPHEN J. SORLEY
8/24/03

NO.	DATE	REMARKS	BY
1	9/12/03	Modify press. MH Detail (Shape Replace)	PSL

REVISIONS
DESIGN

		DATE
DESIGNED BY	PJC	03/03
DRAWN BY	SEC	03/03
CHECKED BY	PJC	03/03

103100-MechemSD
Smith Engineering Company
A Full Service Engineering Company
6400 Uptown Boulevard, N.E. Suite 500E Albuquerque, New Mexico 87110

CITY OF ALBUQUERQUE
PUBLIC WORKS DEPARTMENT
ENGINEERING DEVELOPMENT GROUP

TITLE: MECHEM STORM DRAIN AND DETENTION BASIN

MISCELLANEOUS DETAILS

Design Review Committee: APPROVED SEP 22 2003 DESIGN REVIEW COMMITTEE
City Engineer Approval: APPROVED SEP 22 2003 CITY ENGINEER
Last Design Update — No. / Day / Yr. — No. / Day / Yr.

City Project No. 6825.9 | Zone Map No. M-14 | Sheet No. | Drawing No. 21 of 25

Z:\Projects\103100-Mechem\DWGs\
DETDB.DWG

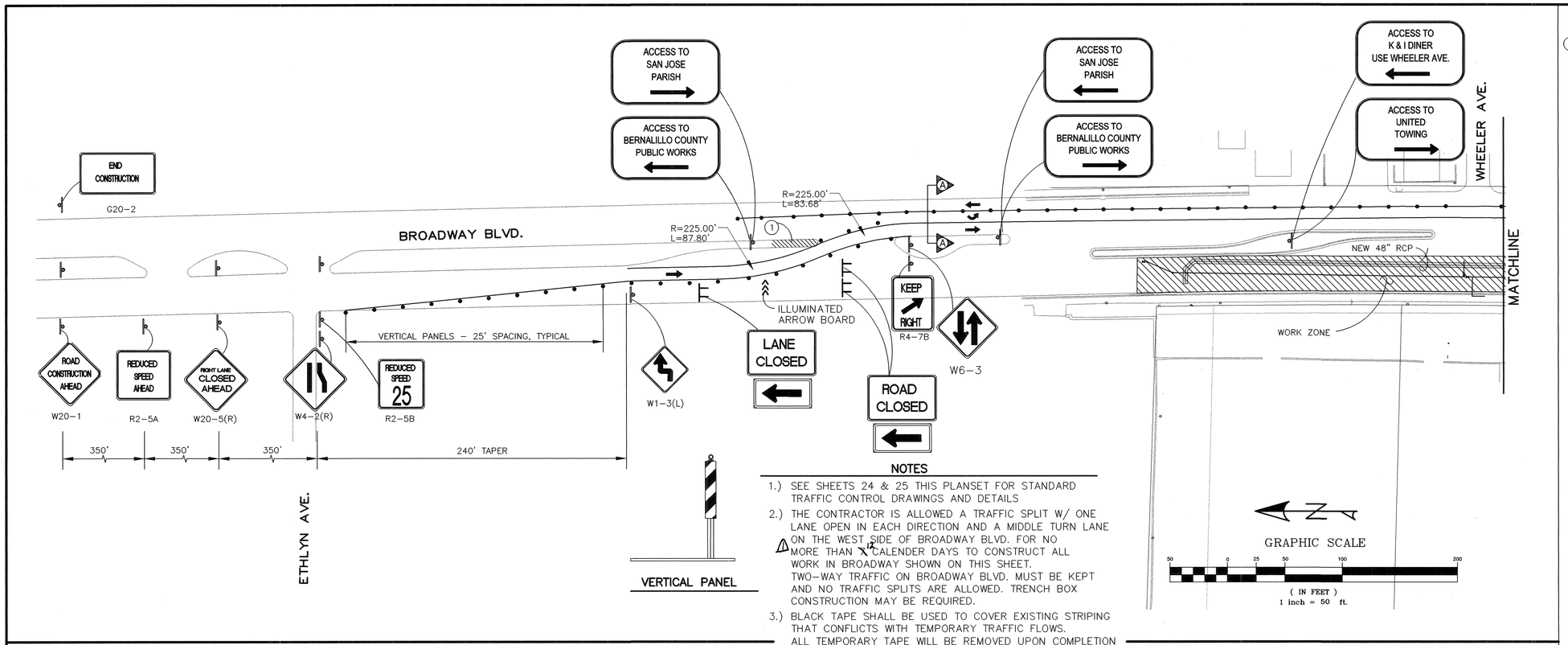

NOTES

1.) SEE SHEETS 24 & 25 THIS PLANSET FOR STANDARD TRAFFIC CONTROL DRAWINGS AND DETAILS

2.) THE CONTRACTOR IS ALLOWED A TRAFFIC SPLIT W/ ONE LANE OPEN IN EACH DIRECTION AND A MIDDLE TURN LANE ON THE WEST SIDE OF BROADWAY BLVD. FOR NO MORE THAN ~~X~~ 12 CALENDER DAYS TO CONSTRUCT ALL WORK IN BROADWAY SHOWN ON THIS SHEET. TWO-WAY TRAFFIC ON BROADWAY BLVD. MUST BE KEPT AND NO TRAFFIC SPLITS ARE ALLOWED. TRENCH BOX CONSTRUCTION MAY BE REQUIRED.

3.) BLACK TAPE SHALL BE USED TO COVER EXISTING STRIPING THAT CONFLICTS WITH TEMPORARY TRAFFIC FLOWS. ALL TEMPORARY TAPE WILL BE REMOVED UPON COMPLETION OF CONSTRUCTION. IF PERMANENT MARKINGS ARE REMOVED DURING CONSTRUCTION, CONTRACTOR IS RESPONSIBLE FOR REPLACING PERMANENT MARKINGS WHEN CONSTRUCTION IS COMPLETED.

4.) CONTRACTOR SHALL MAINTAIN 11 FEET (MINIMUM) DRIVING LANES AT ALL TIMES.

5.) CONTRACTOR SHALL INSTALL TEMPORARY STRIPING AS REQUIRED TO FACILITATE LANE DESIGNATIONS DURING CONSTRUCTION.

KEYED NOTES

(1) REMOVE COLORED PATTERNED CONCRETE AND MEDIAN CURB AND GUTTER. PLACE TEMPORARY PAVING FOR TRAFFIC CONTROL. REMOVE TEMPORARY PAVING AND REPLACE PATTERNED CONCRETE AND MEDIAN CURB AND GUTTER.

LEGEND

- VERTICAL PANEL
- TRAFFIC CONTROL SIGN
- TT TYPE III BARRICADE

W/BL TYPICAL SPECIAL BUSINESS ACCESS SIGN

NTS

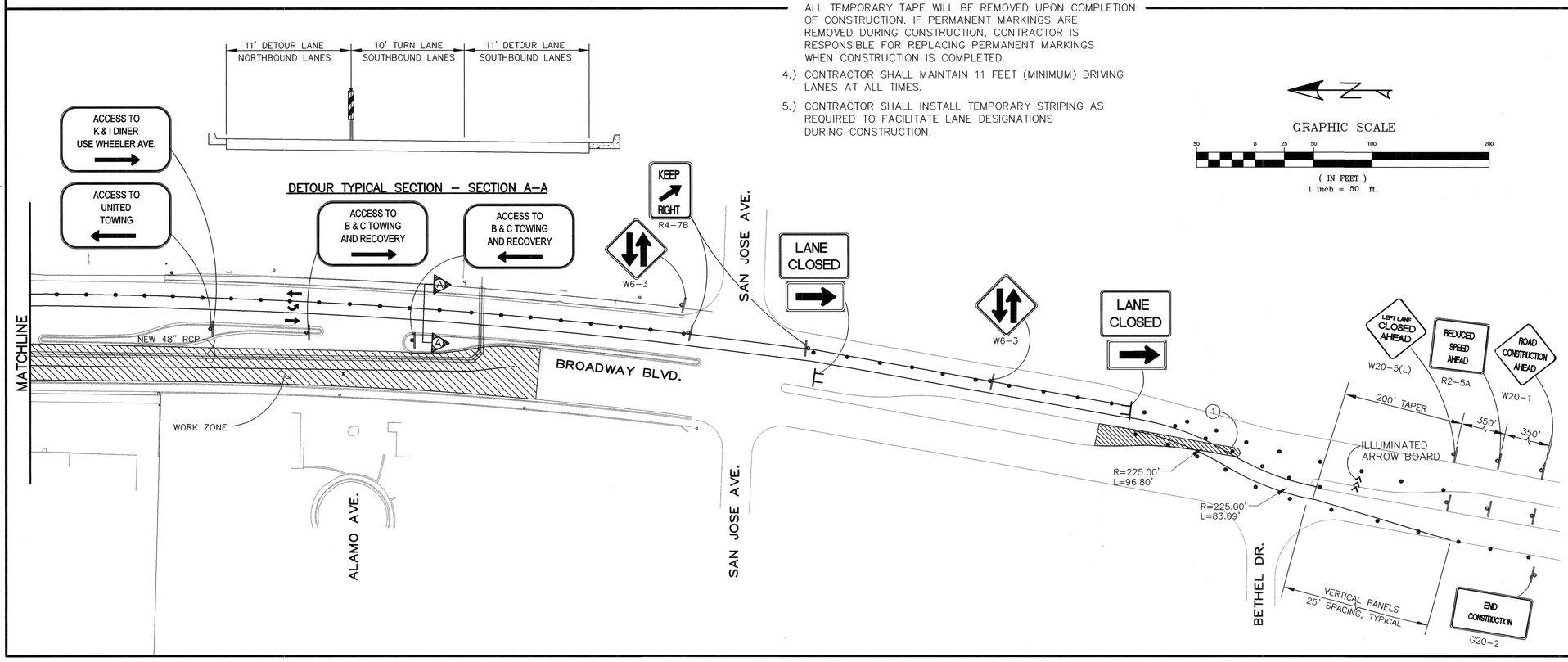

Z:\PROJECTS\SOUTH BROADWAY (MECHAM)\PLANSET-95%\18-TRAFFIC-CONTROL-1.DWG 9-5-03 11:57 pm EST

AS BUILT INFORMATION
CONTRACTOR
WORK STAKED BY — DATE
INSPECTED BY — DATE
ACCEPTANCE BY — DATE
FIELD VERIFICATION BY — DATE
DRAWINGS CORRECTED BY — DATE
MICRO-FILM INFORMATION
RECORDED BY — DATE
NO.

BENCH MARKS
ACS BRASS TABLET STAMPED "5-M14 1974"
LOCATED AT THE INTERSECTION OF BROADWAY BLVD. AND WOODWARD AVE.
X= 381,544.83
Y= 1,473,267.10
G-G = 0.9996800 ΔX = 00° 13' 38"
(NAD 1927/SLD 1929)
ELEVATION = 4937.592

SURVEY INFORMATION
FIELD NOTES
NO. | BY | DATE

ENGINEERS SEAL

NO.	DATE	REMARKS	BY
1	4-22-13	Revised Phase 1 Alternate Detour	DBT

REVISIONS

		DATE
DESIGNED BY	DBT	08/27/03
DRAWN BY	BLN	08/27/03
CHECKED BY	DBT	08/27/03

THOMPSON ENGINEERING CONSULTANTS
CIVIL ENGINEERING SERVICES
PHONE-(505)271-2199 FAX-(505)237-8422

Smith Engineering Company
A Full Service Engineering Company
6400 Uptown Boulevard, N.E. Suite 500E Albuquerque, New Mexico 87110

CITY OF ALBUQUERQUE
PUBLIC WORKS DEPARTMENT
ENGINEERING DEVELOPMENT GROUP

TITLE: MECHAM STORM DRAIN AND DETENTION BASIN
TRAFFIC CONTROL PLAN FOR BROADWAY BLVD. PHASE 1

Design Review Committee: APPROVED SEP 12 2003 DESIGN REVIEW COMMITTEE
City Engineer Approval: APPROVED SEP 12 2003
Last Design Update — Mo. / Day / Yr. — Mo. / Day / Yr.

City Project No.	Zone Map No.	Sheet No.	Drawing No.
682502	M-14		22 of 25

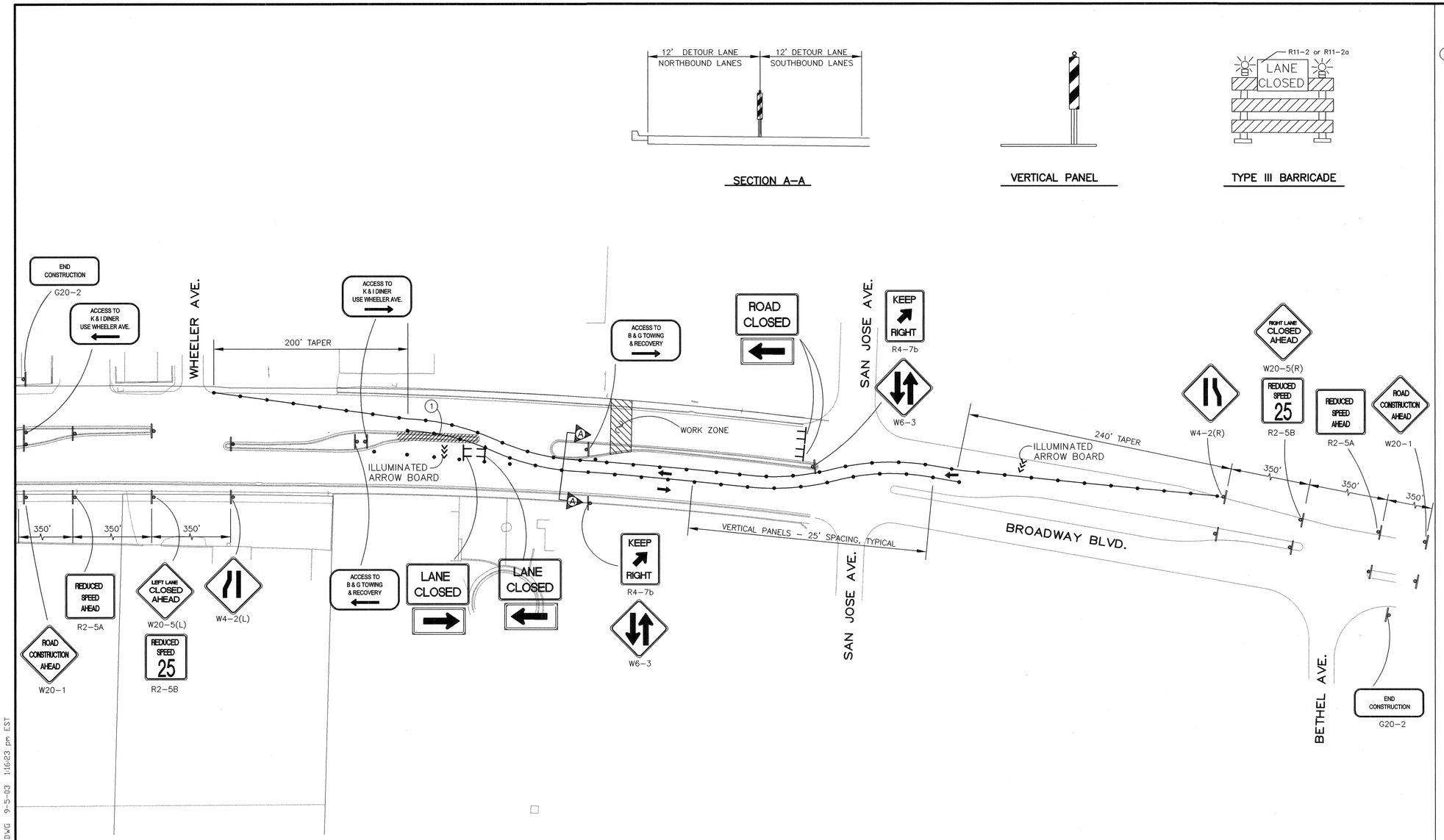

KEYED NOTES

1. REMOVE COLORED PATTERNED CONCRETE AND MEDIAN CURB AND GUTTER. PLACE TEMPORARY PAVING FOR TRAFFIC CONTROL. REMOVE TEMPORARY PAVING AND REPLACE PATTERNED CONCRETE AND MEDIAN CURB AND GUTTER.

LEGEND

- VERTICAL PANEL
- TRAFFIC CONTROL SIGN
- TT TYPE III BARRICADE

W/BL TYPICAL SPECIAL BUSINESS ACCESS SIGN

NTS

NOTES

1.) SEE SHEETS 24 & 25 THIS PLANSET FOR STANDARD TRAFFIC CONTROL DRAWINGS AND DETAILS

2.) THE CONTRACTOR IS ALLOWED A TRAFFIC SPLIT W/ ONE LANE OPEN IN EACH DIRECTION ON THE WEST SIDE OF BROADWAY BLVD. FROM 7:00 P.M. FRIDAY THROUGH 5:00 A.M. MONDAY FOR CONSTRUCTION OF THE 48" DIAMETER STORM DRAIN ACROSS THE NORTHBOUND LANES OF BROADWAY BLVD. TRENCH BOX CONSTRUCTION MAY BE REQUIRED.

3.) BLACK TAPE SHALL BE USED TO COVER EXISTING STRIPING THAT CONFLICTS WITH TEMPORARY TRAFFIC FLOWS. ALL TEMPORARY TAPE WILL BE REMOVED UPON COMPLETION OF CONSTRUCTION. IF PERMANENT MARKINGS ARE REMOVED DURING CONSTRUCTION, CONTRACTOR IS RESPONSIBLE FOR REPLACING PERMANENT MARKINGS WHEN CONSTRUCTION IS COMPLETED.

4.) CONTRACTOR SHALL MAINTAIN 11 FEET (MINIMUM) DRIVING LANES AT ALL TIMES.

5.) CONTRACTOR SHALL INSTALL TEMPORARY STRIPING AS REQUIRED TO FACILITATE LANE DESIGNATIONS DURING CONSTRUCTION.

GRAPHIC SCALE

50 0 25 50 100 200

(IN FEET)
1 inch = 50 ft.

AS BUILT INFORMATION

CONTRACTOR
WORK STAKED BY — DATE
INSPECTOR'S ACCEPTANCE BY — DATE
FIELD VERIFICATION BY — DATE
DRAWINGS CORRECTED BY — DATE

MICRO-FILM INFORMATION
RECORDED BY — DATE
NO.

BENCH MARKS

ACS BRASS TABLET STAMPED "5–M14 1974"
LOCATED AT THE INTERSECTION OF
BROADWAY BLVD. AND WOODWARD AVE.
X= 381,544.83
Y= 1,473,267.10
G–G = 0.999800 ΔX = 00° 13' 38"
(NAD 1927/SLD 1929)
ELEVATION = 4937.592

SURVEY INFORMATION

FIELD NOTES

NO.	BY	DATE

ENGINEERS SEAL

REVISIONS

NO.	DATE	REMARKS	BY

		DATE
DESIGNED BY	DBT	08/27/03
DRAWN BY	BLN	08/27/03
CHECKED BY	DBT	08/27/03

THOMPSON ENGINEERING CONSULTANTS
CIVIL ENGINEERING SERVICES
PHONE–(505)271–2199 FAX–(505)237–8422

Smith Engineering Company
A Full Service Engineering Company
6400 Uptown Boulevard, N.E. Suite 500E Albuquerque, New Mexico 87110

CITY OF ALBUQUERQUE
PUBLIC WORKS DEPARTMENT
ENGINEERING DEVELOPMENT GROUP

TITLE: MECHAM STORM DRAIN AND DETENTION BASIN
TRAFFIC CONTROL PLAN FOR BROADWAY BLVD. PHASE 2

Design Review Committee: APPROVED SEP 12 2003 DESIGN REVIEW COMMITTEE

City Engineer Approval: APPROVED SEP 12 2003 CITY ENGINEER

Last Design Update — Mo. / Day / Yr. — Mo. / Day / Yr.

City Project No. 682582 | Zone Map No. M-14 | Sheet No. | Drawing No. 23 of 25

Z:\PROJECTS\SOUTH BROADWAY (MECHAM)\PLANSET-95%\19-TRAFFIC-CONTROL-1.DWG 9-5-03 1:16:23 pm EST

CONSTRUCTION TRAFFIC CONTROL GENERAL NOTES

1. CONTRACTOR MUST OBTAIN FROM CONSTRUCTION COORDINATION AN EXCAVATION/BARRICADING PERMIT BEFORE ENGAGING IN ANY CONSTRUCTION, MAINTENANCE OR REPAIR WORK IN ANY OF THE CITY OF ALBUQUERQUE'S RIGHTS-OF-WAY. EMERGENCY WORK THAT WOULD PRESERVE LIFE OR PROPERTY IS EXCLUDED WITH THE UNDERSTANDING, THAT A PERMIT SHALL BE OBTAINED WITHIN 24 TO 48 HOURS.

2. CONTRACTOR SHALL AT THE TIME OF PERMIT REQUEST, SUBMIT FOR APPROVAL BY CONSTRUCTION COORDINATION, A TRAFFIC CONTROL PLAN DETAILING ALL EXISTING TOPOGRAPHY SUCH AS LANE WIDTHS, DRIVEWAYS, AND BUSINESS/RESIDENTIAL ACCESSES. THE TRAFFIC CONTROL PLAN SHALL INCLUDE ALL PHASES OF WORK AND SCHEDULES INVOLVED IN THE CONSTRUCTION PROJECT. ANY SEPERATE PHASES OF A CONSTRUCTION PROJECT SHALL BE GIVEN AN INDIVIDUAL PERMIT EACH. BLANKET PERMITS WILL NOT BE ISSUED.

3. THESE TYPICAL TRAFFIC CONTROL PLANS DO NOT REFLECT THE EXISTING TOPOGRAPHY SUCH AS DRIVEWAYS, LANE WIDTHS, AND BUSINESS/RESIDENTIAL ACCESSES. EVERY LOCATION THAT REQUIRES CONSTRUCTION TRAFFIC CONTROL SHALL HAVE A DETAILED TRAFFIC CONTROL PLAN SHOWING ALL EXISTING TOPOGRAPHY.

4. CONSTRUCTION SHALL NOT BEGIN UNLESS A TRAFFIC CONTROL PLAN HAS BEEN APPROVED AND VERIFIED BY CONSTRUCTION COORDINATION.

5. CONSTRUCTION COORDINATION SHALL BE NOTIFIED 48 HOURS PRIOR TO ANY TRAFFIC CONTROL CHANGES NEEDED BY CONTRACTOR, THAT WERE NOT PREVIOUSLY APPROVED. THESE TRAFFIC CONTROL CHANGES SHALL BE REQUESTED IN WRITING ACCOMPANIED WITH A TRAFFIC CONTROL PLAN REFLECTING SUCH CHANGES.

6. ALL CONSTRUCTION TRAFFIC CONTROL DEVICES SHALL COMPLY TO THE MANUAL ON UNIFORM TRAFFIC CONTROL DEVICES (MUTCD), LATEST EDITION. IT IS THE RESPONSIBILITY OF THE CONTRACTOR TO INSTALL, SERVICE AND MAINTAIN ALL TRAFFIC CONTROL DEVICES. TRAFFIC CONTROL DEVICES SHALL NOT BE REMOVED OR ALTERED IN ANY WAY WITHOUT THE APPROVAL OF CONSTRUCTION COORDINATION, PER SECTION 6A-4 OF THE MUTCD, LATEST EDITION.

7. THE CONSTRUCTION TRAFFIC CONTROL INITIAL SET-UP SHALL BE BY AN AMERICAN TRAFFIC SAFETY SERVICES ASSOCIATION (ATSSA) CERTIFIED WORKSITE TRAFFIC SUPERVISOR. THE MAINTENANCE AND SERVICING SHALL ALSO BE DONE BY AN ATSSA CERTIFIED WORKSITE TRAFFIC SUPERVISOR OR EQUIVALENT.

8. CONTRACTOR IS RESPONSIBLE TO MAINTAIN AND SERVICE ALL TRAFFIC CONTROL DEVICES 24 HOURS A DAY, 7 DAYS A WEEK THROUGHOUT LENGTH OF PROJECT. CONTRACTOR IS RESPONSIBLE THAT ALL TRAFFIC CONTROL DEVICES COMPLY WITH THE MUTCD, LATEST EDITION.

9. ALL ADVANCE WARNING SIGNS SHALL BE DOUBLE INDICATED WHENEVER THERE ARE MULTI-LANE TRAFFIC IN ANY ONE GIVEN DIRECTION AND THERE IS SUFFICIENT MEDIAN SPACE.

10. ALL BARRICADES IN ALL TAPERS AND TANGENTS SHALL BE PLACED APART, A DISTANCE MEASURED IN FEET, EQUAL TO THAT OF THE POSTED SPEED LIMIT. NO EXCEPTIONS UNLESS APPROVED BY CONSTRUCTION COORDINATION PER MUTCD SECTION 6A-4.

△1 11. ALL WORK IN ARTERIAL ROADWAYS SHALL BE ON A CONTINUOUS 24 HOUR PER DAY BASIS UNTIL COMPLETED.

12. CONTRACTOR IS RESPONSIBLE TO PROVIDE CONSTRUCTION COORDINATION, A WEEKLY LOG OF DAILY INSPECTIONS OF BARRICADE AND MAINTENANCE SCHEDULES ON PROJECTS THAT ARE OVER ONE WEEK DURATION.

13. EQUIPMENT OR MATERIALS SHALL NOT BE STORED WITHIN 15 FEET OF A TRAVELED TRAFFIC LANE DURING NON-WORKING HOURS WITHOUT THE APPROVAL OF CONSTRUCTION COORDINATION.

14. CONTRACTOR SHALL PROVIDE AND MAINTAIN A SAFE AND ADEQUATE MEANS OF CHANNELIZING PEDESTRIAN TRAFFIC AROUND AND THROUGH THE CONSTRUCTION AREA.

15. CONTRACTOR IS RESPONSIBLE FOR OBLITERATION OF ANY CONFLICTING STRIPING AND RESPONSIBLE FOR ALL TEMPORARY STRIPING.

16. CONTRACTOR SHALL MAINTAIN ACCESS TO ALL FACILITIES, BUSINESSES AND/OR RESIDENTS AT ALL TIMES.

17. CONTRACTOR SHALL PROVIDE ACCESS SIGNS FOR BUSINESSES LOCATED WITHIN THE CONSTRUCTION AREA UNDER THE SUPERVISION OF CONSTRUCTION COORDINATION. EACH ACCESS SIGN SHALL HAVE 5 INCH, WHITE OPAQUE LETTERING ON BLUE REFLECTORIZED BACKGROUND. ACCESS SIGNS SHALL BE CONSIDERED INCIDENTAL TO THE BID AND NOT PART OF THE CONTRACT UNLESS OTHERWISE STATED. NO MORE THAN 3 BUSINESSES SHALL BE LISTED ON A ACCESS SIGN. SHOPPING CENTERS AND MALLS SHALL BE LISTED AS SUCH.

18. ALL ADVANCE WARNING SIGNS SHALL MEET THE MINIMUM REFLECTIVE INTENSITY REQUIREMENTS SET FORTH BY THE CITY OF ALBUQUERQUE. CONSTRUCTION COORDINATION SHALL DETERMINE ALL REQUIREMENTS AND APPROVE OR DISAPPROVE ANY ADVANCE WARNING SIGN PER SECTION 6A-4 OF THE MUTCD, LATEST EDITION.

△2 19. 48 HOURS PRIOR TO OCCUPYING OR CLOSING OF A RIGHT-OF-WAY, CONTRACTOR SHALL NOTIFY: POLICE, FIRE DEPARTMENT, SCHOOLS, HOSPITALS, TRANSIT AUTHORITY, BUSINESSES AND/OR RESIDENTS THAT WILL BE AFFECTED BY THE CONSTRUCTION.

20. ANY FIELD ADJUSTMENTS SHALL BE APPROVED BY CONSTRUCTION COORDINATION.

21. EXCAVATIONS SHALL BE PLATED, TEMPORARILY PATCHED OR RESURFACED PRIOR TO OPENING OF TRAFFIC. A MINIMUM OF 11 FEET SHALL BE PROVIDED FOR TRAFFIC IN ANY GIVEN DIRECTION. CONTRACTOR IS RESPONSIBLE FOR ANY WORK INVOLVED IN SATISFYING THESE REQUIREMENTS.

22. CONTRACTOR SHALL AT ALL TIMES COMPLY WITH THE FOLLOWING:
1. STANDARDS AND REQUIREMENTS SET FORTH IN THE MANUAL ON UNIFORM TRAFFIC CONTROL DEVICES, LATEST EDITION.
2. THE CITY OF ALBUQUERQUE TRAFFIC CODE, LATEST EDITION.
3. SECTION 19 OF THE CITY OF ALBUQUERQUE'S STANDARD SPECIFICATIONS FOR PUBLIC WORK CONSTRUCTION, AS WELL AS OTHER SECTIONS.

23. FAILURE TO COMPLY WITH ANY OF THE ABOVE MENTIONED, WILL BE ADEQUATE CAUSE TO CEASE ALL WORK ON ANY CONSTRUCTION PROJECT. WORK WILL NOT RESUME UNTIL ALL REQUIREMENTS ARE ADDRESSED AND APPROVED BY CONSTRUCTION COORDINATION.

24. ALL TRAFFIC CONTROL DEVICES SHALL BE KEPT IN NEW-CLEAN CONDITION, WASHING OF EQUIPMENT IS INCIDENTAL TO IT'S PLACEMENT AND MAINTENANCE.

25. TRAFFIC CONTROL STANDARDS APPLY ONLY WHERE THE CONSTRUCTION TRAFFIC CONTROL PLANS ARE NOT SPECIFIC.

△3 26. ADVANCE WARNING SIGNS SHALL BE 36"x36" MIN. WITH SUPER ENGINEERING GRADE SHEETING OR BETTER. MOUNTING HEIGHT AT TOP OF SIGN SHALL BE THE SAME AS FOR A 48" SIGN AS INDICATED IN THE M.U.T.C.D.

△4 27. CONTRACTOR SHALL MAINTAIN A GRAFFITI-FREE WORKSITE. ALL GRAFFITI SHALL BE PROMPTLY REMOVED FROM ALL EQUIPTMENT, BOTH PERMANENT AND TEMPORARY.

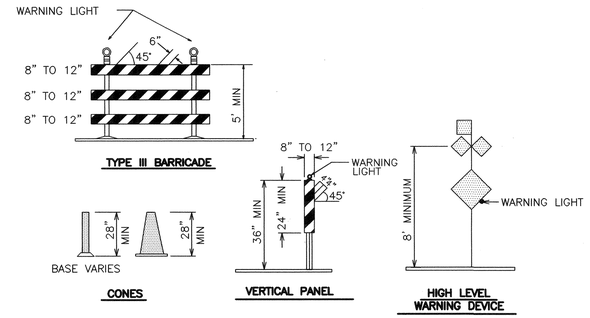

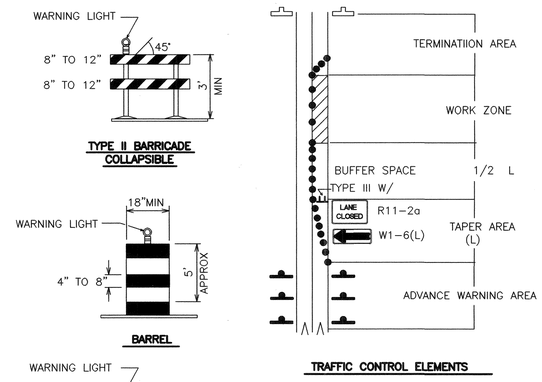

LEGEND

- WORK AREA
- BARRICADE – TYPE I, TYPE II, OR BARREL
- BARRICADE – TYPE III
- VERTICAL PANEL
- D — WARNING SIGN DISTANCE BETWEEN SIGNS – A DISTANCE MEASURED IN FEET EQUAL TO A VALUE OF TEN TIMES THE SPEED LIMIT OF THE STREET
- FLAGMAN POSITION
- S — SPACING BETWEEN BARRICADES – A DISTANCE MEASURED IN FEET EQUAL TO THE STREET LIMIT OF THE STREET
- L — TAPER LENGTH – SEE CHART BELOW

THE TANGENT LENGTH IS EQUAL TO THE TAPER LENGTH FOR A GIVEN STREET.

TAPER REQUIREMENT

SPEED LIMIT (MPH)	TAPER LENGTH(L) (FEET)			MINIMUM NUMBER OF DEVICES FOR TAPER	MAXIMUM DEVICE SPACING IN FEET	
	10' LANE	11' LANE	12' LANE		ALONG TAPER	AFTER TAPER
20	70	75	80	5	20	20
25	105	115	125	6	25	25
30	150	165	180	7	30	30
35	205	225	245	8	35	35
40	270	295	320	9	40	40
45	450	495	540	13	45	45
50	500	550	600	13	50	50
55	550	605	660	13	55	55

RECOMMENDED SIGN SPACING(D) FOR ADVANCE WARNING SIGN SERIES

SPEED MILES PER HOUR	MINIMUM DISTANCE IN FEET BETWEEN SIGNS	FROM LAST SIGN TO TAPER
0–20	10 X SPEED LIMIT	10 X SPEED LIMIT
25–30	10 X SPEED LIMIT	10 X SPEED LIMIT
30–35	10 X SPEED LIMIT	10 X SPEED LIMIT
40–45	10 X SPEED LIMIT	10 X SPEED LIMIT
50–60	10 X SPEED LIMIT	10 X SPEED LIMIT

TAPER CRITERIA

TYPE OF TAPER	TAPER LENGTH
UPSTREAM TAPER:	
MERGING TAPER	L MINIMUM
SHIFTING TAPER	1/2 L MINIMUM
SHOULDER TAPER	1/2 L MINIMUM
TWO-WAY TRAFFIC TAPER	100 FEET MAXIMUM
DOWNSTREAM TAPERS	100 FEET PER LANE

TAPER LENGTH COMPUTATION

SPEED LIMIT	
40 MPH OR LESS	$L = \frac{WS^2}{60}$
40 MPH OR GREATER	$L = W \times S$

L = TAPER LENGTH
W = WIDTH OF OFFSET IN FEET
S = POSTED SPEED OR OFF-PEAK 85-PERCENTILE SPEED IN MPH

SIGN FACE DETAILS

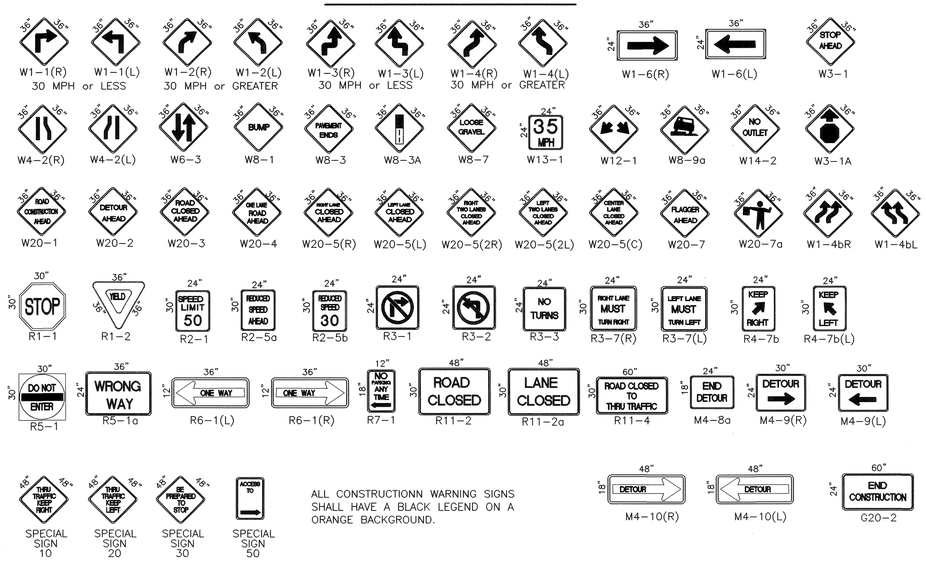

ALL CONSTRUCTIONN WARNING SIGNS SHALL HAVE A BLACK LEGEND ON A ORANGE BACKGROUND.

AS-BUILT INFORMATION
CONTRACTOR — DATE
WORK BY — DATE
INSPECTOR'S ACCEPTANCE BY — DATE
FIELD VERIFICATION BY — DATE
DRAWINGS CORRECTED BY — DATE
MICRO-FILM INFORMATION
RECORDED BY — DATE
NO.

BENCH MARKS

SURVEY INFORMATION
FIELD NOTES

NO.	BY	DATE

ENGINEER'S SEAL

COA STD

NO.	DATE	REMARKS	BY
△1	9/25/97	ADD NOTE NO. 27	J.D.L.
△2	9/24/97	REVISED NOTE NO. 26	J.D.L.
△3	9/24/97	REVISED NOTE NO. 19	J.D.L.
△4	9/24/97	REVISED NOTE NO. 11	J.D.L.

REVISIONS

DESIGN
DESIGNED BY BOHANNAN HUSTON — DATE 5-97
DRAWN BY BOHANNAN HUSTON — DATE 5-97
CHECKED BY BOHANNAN HUSTON — DATE 5-97

CITY OF ALBUQUERQUE
PUBLIC WORKS DEPARTMENT
ENGINEERING DEVELOPMENT GROUP

TITLE:
TRAFFIC CONTROL
SIGNING AND CONSTRUCTION TRAFFIC CONTROL STANDARDS

DESIGN REVIEW COMMITTEE | CITY ENGINEER APPROVAL | LAST DESIGN UPDATE | MO./DAY/YR. | MO./DAY/YR.

CITY PROJECT NO. 682582 | ZONE MAP NO. M-14 | SHEET 24 OF 25

Z:\PROJECTS\SOUTH BROADWAY (MECHAM)\PLANSET-95\X24-CITYSIGN.DWG 8-26-03 12:54:47 pm EST

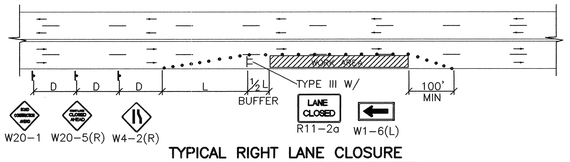

TYPICAL RIGHT LANE CLOSURE

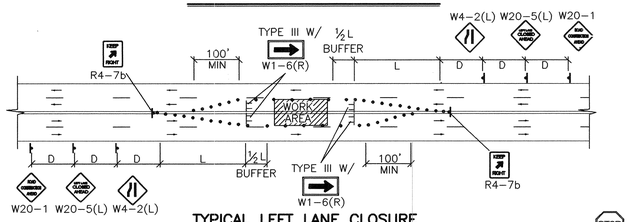

TYPICAL LEFT LANE CLOSURE

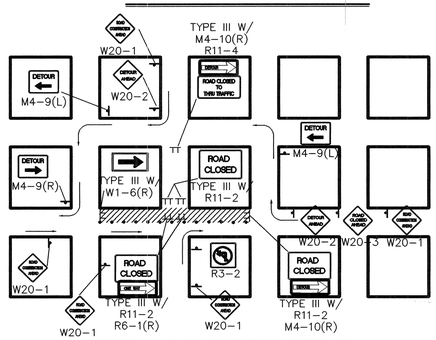

TYPICAL ONE DIRECTION DETOUR

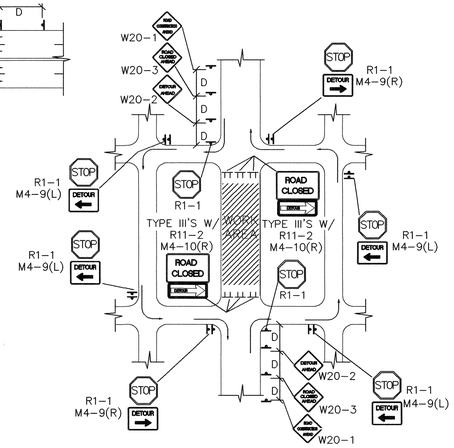

TYPICAL STREET CLOSURE

NOTE: (R1-1) BASED ON FIELD CONDITIONS.

NOTE:
MAY REQUIRE LEFT LANE CLOSURE DEPENDING ON FIELD CONDITIONS.

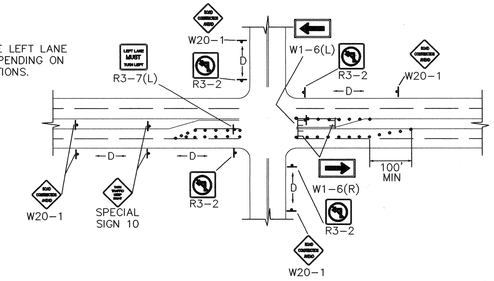

TYPICAL LANE CLOSURE AT INTERSECTION

NOTE: DEPENDING ON WORK ZONE LOCATION.

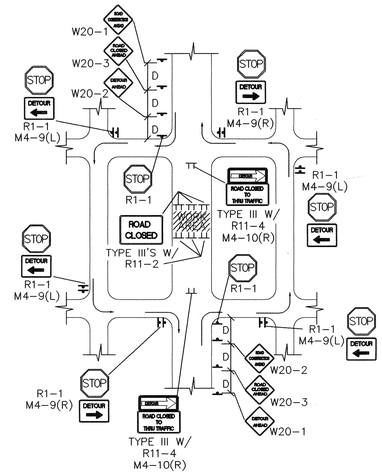

TYPICAL MID-BLOCK CLOSURE

NOTE: (R1-1) BASED ON FIELD CONDITIONS.

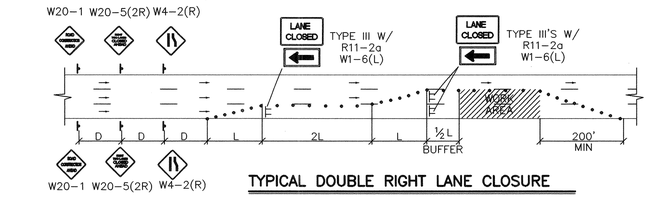

TYPICAL DOUBLE RIGHT LANE CLOSURE

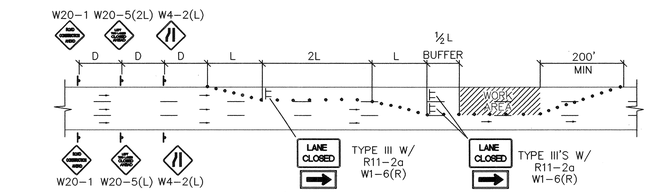

TYPICAL DOUBLE LEFT LANE CLOSURE

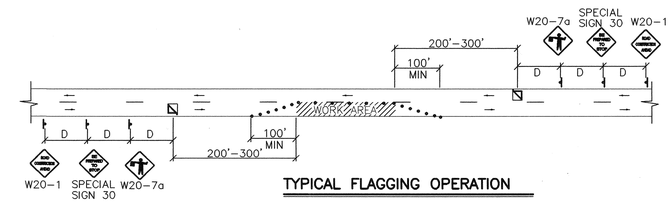

TYPICAL FLAGGING OPERATION

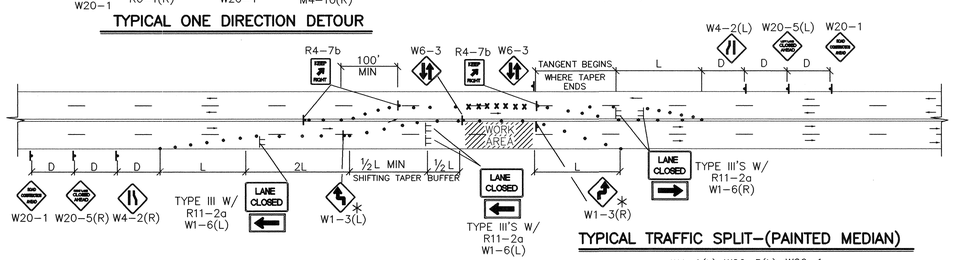

TYPICAL TRAFFIC SPLIT-(PAINTED MEDIAN)

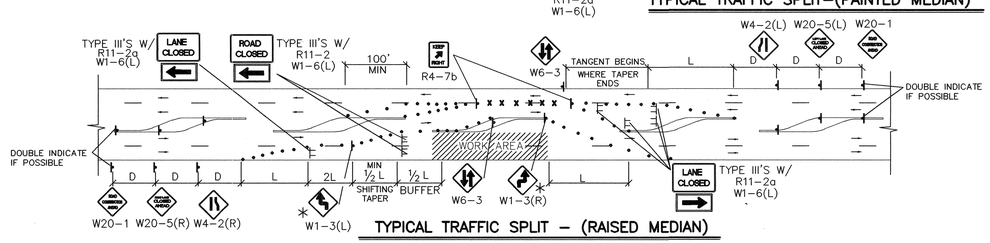

TYPICAL TRAFFIC SPLIT – (RAISED MEDIAN)

TRAFFIC SPLIT NOTES:

1. THE OFFSET DISTANCE MUST BE CALCULATED IN ALL SHIFTING TAPERS. THE OFFSET DISTANCES SHALL INCLUDE LANE WIDTHS PLUS MEDIAN WIDTHS.
2. 1/2 L IS THE MINIMUM DISTANCE FOR SHIFTING TAPERS.
3. REVERSE CURVES MAY BE IMPLEMENTED. ALL CURVE DATA SHALL BE CALCULATED.
4. MEDIAN REMOVAL SHALL BE REQUIRED IF 1/2 L OR REVERSE CURVE IS NOT SUFFICIENT. MEDIAN REMOVAL SHALL TAKE PLACE BEFORE SPLITS.
5. REDUCED SPEED MAY BE CONSIDERED.
6. * USE W1-3 FOR 30 MPH OR LESS, W1-4 FOR SPEED 35 MPH OR GREATER.

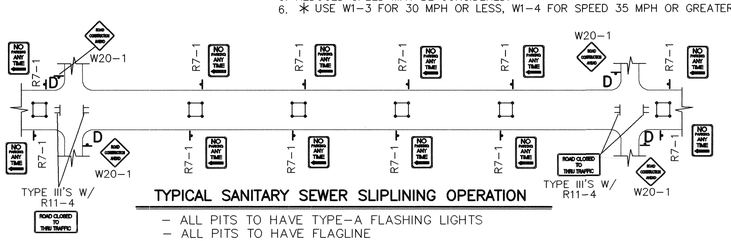

TYPICAL SANITARY SEWER SLIPLINING OPERATION

- ALL PITS TO HAVE TYPE-A FLASHING LIGHTS
- ALL PITS TO HAVE FLAGLINE

GENERAL NOTE:

ALL CONSTRUCTION WARNING SIGNS SHALL HAVE A BLACK LEGEND ON A ORANGE BACKGROUND.

△1 ALL ADVANCE WARNING SIGNS SHALL BE A MINIMUM OF 36" THIRTY SIX INCHES BY 36" THIRTY SIX INCHES IN SIZE AND SHALL HAVE ONE WARNING LIGHT.

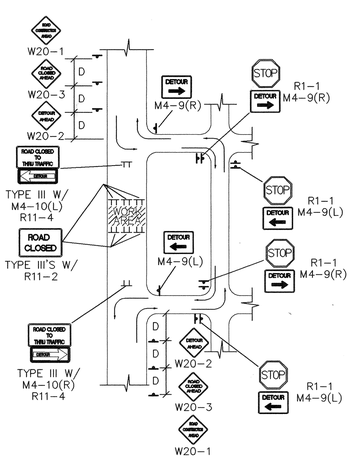

TYPICAL STREET CLOSURE

NOTE: (R1-1) BASED ON FIELD CONDITIONS.

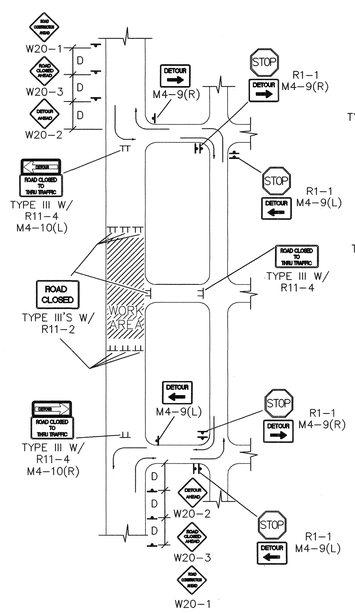

TYPICAL STREET CLOSURE

NOTE: (R1-1) BASED ON FIELD CONDITIONS.

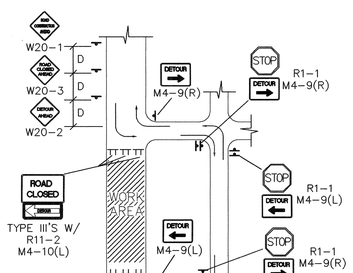

TYPICAL STREET CLOSURE

NOTE: (R1-1) BASED ON FIELD CONDITIONS.

AS-BUILT INFORMATION

	DATE
CONTRACTOR	
WORK STAKED BY	DATE
INSPECTOR'S ACCEPTANCE BY	DATE
FIELD VERIFICATION BY	DATE
DRAWINGS CORRECTED BY	DATE

MICRO-FILM INFORMATION

	DATE
RECORDED BY	
NO.	

BENCH MARKS

SURVEY INFORMATION

FIELD NOTES

NO.	BY	DATE

ENGINEER'S SEAL

COA STD

NO.	DATE	REMARKS	BY
△	9/24/97	REVISED GENERAL NOTE	J.D.L.

REVISIONS	
DESIGN	
DESIGNED BY BOHANNAN HUSTON	DATE 5-97
DRAWN BY BOHANNAN HUSTON	DATE 5-97
CHECKED BY BOHANNAN HUSTON	DATE 5-97

CITY OF ALBUQUERQUE
PUBLIC WORKS DEPARTMENT
ENGINEERING DEVELOPMENT GROUP

TITLE: TYPICAL TRAFFIC CONTROL & SIGNING EXAMPLES (REF MUTCD)

DESIGN REVIEW COMMITTEE	CITY ENGINEER APPROVAL	LAST DESIGN UPDATE	MO./DAY/YR.	MO./DAY/YR.
X	X			

CITY PROJECT NO.	ZONE MAP NO.	SHEET	OF
682582	M-14	25	25

Z:\PROJECTS\SOUTH BROADWAY (MECHAM)\PLANSET-95X\25-CITYTRAF.DWG 8-26-03 12:43:24 pm EST