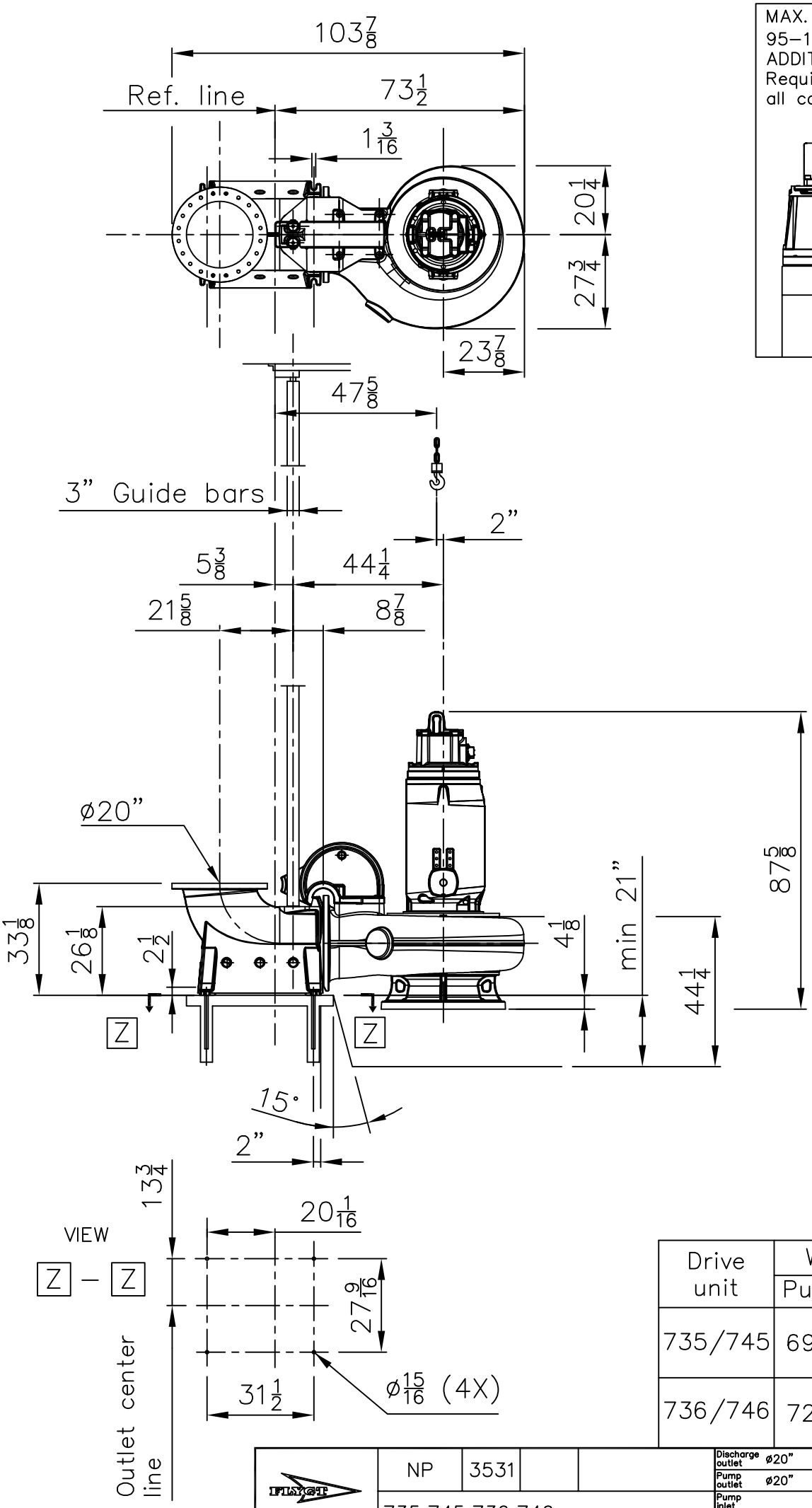

Drive unit	Weight (lbs)	
	Pump	Discharge
735/745	6950	1150
736/746	7280	

IFLYGT	NP	3531		Discharge outlet ø20"	Scale 1:40	Date 200622
				Pump outlet ø20"		
	735,745,736,746			Pump inlet	Drawing number 8421800	Revision 1
				Suction inlet		