MICHAEL MURPHY, CHAIR
TIM EICHENBERG, VICE-CHAIR
LINDA OLMSTED, SECRETARY-TREASURER
RONALD D BROWN, ASST. SECRETARY-TREASURER
DANIEL W. COOK, DIRECTOR

Albuquerque
Metropolitan
Arroyo
Flood
Control
Authority

2600 PROSPECT N.E. - ALBUQUERQUE, N.M. 87107
TELEPHONE (505) 884-2215

L-15/D031E

May 14, 1998

Mr. Larry A. Blair
Director, Public Works Department
Mr. Ricardo B. Roybal
City Engineer

In re: UNM Science and Technology Park

Gentlemen:

Enclosed please find the original Encroachment License concerning Goddard Road and Langham Drive, executed by UNM and AMAFCA. Once it has been signed, please return the original so that I can see to its recordation.

Thank you for your assistance in this matter.

Very truly yours,

Chris Lackmann
Real Estate Manager

CL/c

encl: as indicated.

cc (w/encl): Ms. Cheryl Morris, UNM Facility Planning
Mr. Ted Green, BHI

C:\11WP\LTR.STD
May 14, 1998

Parcel S-15
ZAP L-15

ENCROACHMENT LICENSE AGREEMENT
BRIDGE AND STORM SEWER OUTFALLS
WITHIN SOUTH DIVERSION CHANNEL RIGHT OF WAY

WHEREAS, the ALBUQUERQUE METROPOLITAN ARROYO FLOOD CONTROL AUTHORITY (AMAFCA) owns the fee interest in the South Diversion Channel, (Channel) a portion of which is known as Parcel S-15, being evidenced and shown by the Quitclaim Deed to AMAFCA, dated 2/8/72, and filed in the Office of the County Clerk of Bernalillo County, New Mexico in Volume D913, Folio 943-943A, on the 9th day of March, 1972, as Document No. 74732; and

WHEREAS, the Regents of the University of New Mexico (UNM) own certain real property on either side of the AMAFCA parcel S-15, being variously described as Science and Technology Park at UNM, through which Goddard Road and Langham Drive are proposed to traverse. Goddard Road will traverse and cross the Channel, for which purpose a 12' X 12' box culvert must be constructed, and Langham Drive will parallel the Channel, for which purpose three (3) storm sewer penetrations must be constructed, together with minor grading (collectively, the PROJECT); and

WHEREAS, UNM and the City of Albuquerque (CITY) have entered into a CITY approved Development Plan, assuring that UNM will construct the PROJECT in accordance with standards set forth by the CITY and, among other responsibilities, maintain the PROJECT until it is accepted by CITY; and,

WHEREAS, upon completion of construction and acceptance by CITY, CITY shall thereafter maintain the PROJECT.

NOW, THEREFORE, for good and valuable consideration, the receipt of which is hereby acknowledged:

AMAFCA hereby grants to UNM and CITY, and their successors and assigns, a license to construct, operate, maintain, repair, relocate and remove a box culvert between CHANNEL stations 380+70 and 390+30 (approximately), and three storm sewer penetrations at CHANNEL stations 386+00, 390+00 and 393+00 (approximately), in Bernalillo County, New Mexico being more specifically described in the construction drawings for the PROJECT, contained in the CITY Project Number 566581, together with full and free ingress and egress thereto subject to the following terms and conditions:

1. UNM and/or CITY, as appropriate, shall obtain AMAFCA's written approval for the following:

a. All changes to the plans or specifications which affect the PROJECT or the Channel.
b. Future repair, modification, removal or other activities affecting the completed PROJECT or Channel.
c. Future terrain disturbance in the vicinity of the Channel.

2. Workmanship and materials shall conform to the City of Albuquerque Standard Specifications for Public Works Construction, as currently modified.

3. The initial construction of PROJECT shall be accomplished at the sole expense of UNM.

4. Upon completion of construction and acceptance by CITY, CITY shall be responsible for all operation, maintenance, repair, relocation and removal of PROJECT, at the sole expense of CITY, in such manner as will not damage or interfere with the operation, maintenance or reconstruction of AMAFCA's flood control facilities.

5. As between the parties, each party acknowledges that it will be responsible for claims or damages arising from personal injury or damage to persons or property to the extent they result from the negligence or intentional misconduct of its employees. The liability of UNM, CITY and AMAFCA shall, in all cases, be subject to the immunities and limitations contained in the New Mexico Tort Claims Act, §§41-4-1, et seq., N.M.S.A. 1978, as amended.

6. UNM shall be responsible for all damages caused by the initial construction activities. To ensure repair of such damages, UNM shall require the contractor to purchase Standard Form Owner's Protective Liability insurance naming AMAFCA as additional named insured in the amounts specified in Section 5.2.4, "Bonds and Insurance", of the CITY Standard Specifications for Public Works Construction, 1986 Edition (revised 1992).

7. UNM shall notify AMAFCA (in writing) ten days before beginning work on AMAFCA right-of-way.

8. Construction in or on the Channel, or any impairment to the flood-carrying ability of the Channel, shall be restricted to the period between October 15 and May 15. At all other times, the Channel shall be in original or final condition, and excavations and other land alterations shall be returned to their original contours and compacted condition.

9. Construction within the limits of the AMAFCA channel right-of-way shall be subject to inspection by AMAFCA's Executive Engineer or his designated representative. AMAFCA comments shall be directed to UNM's Project Manager. UNM shall be responsive to AMAFCA comments, especially as such comments pertain to endangering the Channel or impairing the Channel's flood-carrying ability.

10. All materials to be used in the construction within the AMAFCA right-of-way shall be subject to inspection by AMAFCA, in coordination with the Project Manager.

11. Upon completion of construction and acceptance by CITY, CITY shall maintain the PROJECT in good operating order.

12. Upon completion of construction and acceptance by CITY, CITY shall save and hold harmless AMAFCA from all claims and judgments from damages or injury to property or persons arising from the negligent construction, operation, maintenance, relocation, or removal of the PROJECT, and shall reimburse AMAFCA all costs and expenses incurred by AMAFCA arising from the negligent installation, operation, maintenance or removal of the PROJECT. Determination whether damage has occurred shall be by AMAFCA.

13. UNM shall provide AMAFCA with one set of "as built" plans within thirty (30) days of completion of work.

14. Nothing in this License Agreement shall operate or be construed as a termination of the rights granted AMAFCA in the Grant of Reversionary Drainage Easement Around Parcel S-15, dated 2/8/72 recorded 3/9/72 in Vol. Misc. 251, Folio 441-443, document No. 74731.

15. This license, and all rights and privileges herein granted, may be terminated by AMAFCA should CITY fail to comply with any provision of this License Agreement, fail to follow approved construction drawings, or fail to make use of the premises for the purposes stated herein for a continuous period of one year.

16. In addition to its common law rights and remedies under the law of contract, if any AMAFCA action defined in any portion of this license is deemed unreasonable, UNM, or CITY shall have the right to appeal to the AMAFCA Board of Directors.

17. This License Agreement shall be construed according to the laws of the State of New Mexico.

The provisions hereof shall inure to the benefit of and bind the heirs, executors, administrators, successors, and assigns of the parties hereto.

LICENSOR:

Albuquerque Metropolitan Arroyo
Flood Control Authority

by: _____ 5-14-95
John Kelly, Interim Executive Engineer Date
As approved by AMAFCA's Board of Directors
on July 24, 1997.

LICENSEES:

Approved as to form:
_____
University Counsel

The Regents of the University of New Mexico

by: _____ 5/13/98
DAVID L. McKINNEY, V.P. FOR BUSINESS & FINANCE Date

City of Albuquerque:

by: _____ 5/22/98
Ricardo B. Roybal, City Engineer Date

by: _____ _____
Larry A. Blair, Director Date
Public Works Department

State of New Mexico)
)ss
County of Bernalillo)

The foregoing instrument was acknowledged before me this 15th day of May, 1998, by John Kelly, Interim Executive Engineer of the Albuquerque Metropolitan Arroyo Flood Control Authority, a New Mexico Municipal Corporation, on behalf of said corporation.

My commission expires:
6-18-2001

_____
Notary Public

State of New Mexico)
)ss
County of Bernalillo)

The foregoing instrument was acknowledged before me this 13 day of May, 1998, by DAVID L. McKINNEY the VP Business on behalf of the Regents of the University of New Mexico.

My commission expires:
4/24/99

Sabra Jane Baskin
Notary

State of New Mexico)
)ss
County of Bernalillo)

The foregoing instrument was acknowledged before me this _____ day of _____, 19____, by Ricardo B. Roybal, City Engineer, and Larry A. Blair, Director, Public Works Department, on behalf of the City of Albuquerque, a Municipal Corporation.

My commission expires:

_____

_____
Notary

C:\1WP61\LICENSE\ROADCRS\UNM-SDC.CRS

CITY OF
Albuquerque

September 25, 1997

Martin J. Chávez, Mayor

Ted Green, P.E.
Bohannan-Huston, Inc.
7500 Jefferson NE
Albuquerque, NM 87109

RE: UNM SCIENCE & TECHNOLOGY PARK (L15-D31E). DRAINAGE REPORT FOR DRAINAGE REQUIREMENTS. DRAINAGE REPORT DATED JULY 1997 - NO ENGINEER'S STAMP.

Dear Mr. Green:

Based on the information provided on your August 26, 1997 submittal, the above referenced project is conceptually approved. Prior to granting a City Work Order Permit, a full size set of drawings must be review and approved per the DRC process.

If I can be of further assistance, please feel free to contact me at 924-3984.

Sincerely,

Lisa Ann Manwill, P.E.
Hydrology

c: Andrew Garcia
File

BOHANNAN HUSTON

Courtyard One

7500 JEFFERSON NE

Albuquerque

NEW MEXICO 87109

voice 505.823.1000

fax 505.821.0892

DRAINAGE REPORT FOR THE SCIENCE & TECHNOLOGY PARK AT THE UNIVERSITY OF NEW MEXICO

JULY 1997

JUL 18 1997
HYDROLOGY

PREPARED FOR:

UNIVERSITY OF NEW MEXICO
DEPARTMENT OF FACILITY PLANNING
1841 LOMAS BLVD. NE
ALBUQUERQUE, NM 87131

Waiting for Drainage Info Sheet

This report has been prepared under my direct supervision.

Ted F. Green

TED F. GREEN, P.E.

TABLE OF CONTENTS

PAGE

I. INTRODUCTION AND PURPOSE OF REPORT 1

II. STUDY METHODOLOGIES 1

III. PROJECT DESCRIPTION 2

IV. PROJECT IMPACTS ON SOUTH DIVERSION CHANNEL 2

V. CROSSING STRUCTURE ISSUES 3

VI. EXISTING CONDITIONS 4

A. Site Characteristics 4
B. Onsite Drainage Basins 5
C. Off-site Drainage Basins 5

VII. PROPOSED DEVELOPED CONDITIONS 6

VIII. EROSION CONTROL 7

IX. DRAINAGE RECOMMENDATIONS 7

A. Trunkline A : Langham @ Stadium 8
B. Trunkline B: Goddard @ Langham 9
C. Trunkline C: Langham / Basehart 9

X. CONCLUSION 11

FIGURES

FIGURE 1.1 - VICINITY MAP 12
FIGURE 1.2 - ROADWAY PLANS 13
FIGURE 1.3 - REGRADING OF BAR DITCH IN AMAFCA EASEMENT 14
FIGURE 1.4 - AMAFCA CROSSING STRUCTURE AT GODDARD 15
FIGURE 1.5 - DRAINAGE BASIN MAP 16
FIGURE 1.6 - DRAINAGE BASIN RUNNOFFS 17
FIGURE 1.7 - STORM DRAIN FLOW SCHEMATIC 18
FIGURE 1.8 - TRUNKLINE "A" - LANGHAM DRIVE STORM DRAIN PNP SOUTH OF GODDARD 19
FIGURE 1.9 THRU 2.1 - TRUNKLINE "C" LANGHAM DRIVE/BASEHART ROAD STORM DRAIN PNP NORTH OF GODDARD 20
FIGURE 2.2 - TRUNKLINE "B" - GODDARD ROAD STORM DRAIN PNP 23
FIGURE 2.3 - ADDITIVE ALTERNATE CROSSING STRUCTURE PNP AT GODDARD ROAD/AMAFCA SDC 24
FIGURE 2.4 - TRUNKLINE "A" - LANGHAM DRIVE PNP - DISCHARGE TO AMAFCA SDC 25
FIGURE 2.5 - TRUNKLINE "C" LANGHAM DRIVE/BASEHART ROAD STORM DRAIN PNP, DISCHARGE TO AMAFCA SDC 26
FIGURE 2.6 - TRUNKLINES "A" & "B" - DISCHARGE TO SDC 24" STORM DRAIN OUTFALL EROSION PAD DETAIL 27
FIGURE 2.7 - TRUNKLINE "C" - DISCHARGE TO SDC 54" STORM DRAIN OUTFALL DETAILS28
FIGURE 2.8 - US ARMY CORPS OF ENGINEERS - SOUTH DIVERSION CHANNEL ORIGINAL DESIGN 29
FIGURE 2.9 - SOUTH DIVERSION CHANNEL - EXISTING INLET STRUCTURE 30

APPENDIX

APPENDIX A - CALCULATIONS: HYDROLOGIC ANALYSIS

APPENDIX B - CALCULATIONS: STREET HYDRAULICS, INLET CAPACITIES, STORM DRAIN PIPE HYDRAULIC GRADE LINE, CATCH BASIN "V" DEPTHS

APPENDIX C - EXCERPTS FROM STADIUM BOULEVARD STORM DRAINAGE IMPROVEMENT ENGINEERING ANALYSIS REPORT

APPENDIX D - HEC-2 ANALYSIS OF THE SOUTH DIVERSION CHANNEL (SDC)

APPENDIX E - EXCERPTS FROM US ARMY CORPS OF ENGINEERS: SOUTH DIVERSION CHANNEL - ORIGINAL DESIGN OUTFALL ANALYSIS - 54" STORM DRAIN

APPENDIX F - AMAFCA SOUTH DIVERSION CHANNEL RIGHT-OF-WAY AGREEMENT AND REVERIONARY EASEMENT GRANT

I. INTRODUCTION AND PURPOSE OF REPORT

This drainage report presents the drainage management plan for the roadways and development within the Science & Technology Park at the University of New Mexico. The purpose of this report is to request and receive AMAFCA and Corps of Engineers approvals for the work within the AMAFCA right-of-way and to obtain preliminary plat approval. The South Diversion Channel is within AMAFCA Fee right-of-way, bounded on either side by the reversionary easement. Copies of the AMAFCA South Diversion Channel Right-of-Way Agreement and Reversionary Easement Grant are included in Appendix F. The property is approximately 20.9 acres, zoned SU-1 and the proposed development includes a hotel/conference center, science and technology research buildings, and parking structures. The research park is bounded by University Boulevard on the east, Stadium Boulevard on the south, I-25 on the west, and Albuquerque Public School property on the north (see Zone Atlas map L-15-Z & Figure 1.1, page 12). The AMAFCA South Diversion Channel flows through the western half of the property.

The report outlines the study methodologies used and summarizes the existing and proposed drainage conditions. Calculations and supporting data are presented in the appendices. A drainage basin map, an overview of the drainage recommendations, storm drain profiles and the basic hydrological results are included at the end of the report.

The Drainage Management Plan and details presented in this report will be incorporated in the Final Construction Plans that will be processed through the City of Albuquerque's Public Works Department Design Review Committee upon approval by AMAFCA and Corps of Engineers.

II. STUDY METHODOLOGIES

This study was completed under the assumption of ultimate buildout for the research park development, although the roadways will be constructed before the parcel development. The basins were analyzed for the 100-year, 6-hour storm event utilizing Section A of the Hydrology Section of the City of Albuquerque Design Process Manual (DPM), including the January, 1993 revision of Section 22.2, Hydrology. Section A is based on the rational method for watersheds up to 40 acres.

Street hydraulics were analyzed using Plate 22.3 D-1 from the DPM. Hydrologic and hydraulic calculations are provided in the Appendices. Catch Basin interception rates were determined using DPM plates for inlets on continuous grades. Inlet capacities for inlets in trunkline

"C" located in sump conditions were analyzed using the Federal Highway Administration (FHWA) HEC-12 Analysis. Associated charts are included in Appendix B. Streets are designed to convey the 100-year storm event within the right-of-way. Flow depths for 100 yr. flows are confined to the top of the curb. Pipe hydraulics provided are for pressure flow conditions.

III. PROJECT DESCRIPTION

The University of New Mexico Science & Technology Park roadway project includes the construction of two new roads through the middle third of the Science & Technology park. Figure 1.2, page 13, shows a general overlay of the proposed roads. Langham / Basehart will complete the loop road connecting North Research Park Drive to Stadium Blvd. Goddard will be constructed to tie into existing Goddard in front of the newly constructed Optoelectronics Lab and will intersect Langham and continue west across the South Diversion Channel. The roadway itself will include water, sewer, electrical, gas, telephone, and cable T.V. utility lines along with roadway lighting, future signalization and landscaping conduits, as well as the proposed storm drain system outlined within this report. The University of New Mexico intends to build Langham Drive and Basehart Road as a public roadway. Goddard Road will be built as a private road with the potential of becoming a public road in the future. The roadway design will conform to the City of Albuquerque design standards. This project also involves the replatting of the parcel of land into two separate lots, divided by the centerline geometry of Goddard.

IV. PROJECT IMPACTS ON SOUTH DIVERSION CHANNEL

The construction of this project will impact AMAFCA's South Diversion Channel and the surrounding access easement. Coordination with AMAFCA, and ultimately the Corps of Engineers, is currently underway to ensure that any impacts that the crossing structure or roadway construction might have on the South Diversion Channel will be addressed. Several known impacts include regrading in the existing bar ditch within the AMAFCA easement, the construction of a crossing structure at Langham and Goddard, and two new penetration points for the storm drain system. The roadway cross section will be constructed on an earthwork fill on the portion of roadway parallel to the South Diversion Channel. This will require permanent grading changes within the AMAFCA easement and regrading of the existing bar ditch on the east side of the berm. Figure 1.3, page 14, shows a cross section of the regraded ditch within the AMAFCA easement.

Langham Drive will be built on a fill section that effectively blocks and intercepts flows that had previously been routed to the existing concrete baffle chute at the northern end of the South Diversion Channel. The small residual flows from runoff from the area west of the Langham Drive west curb and east of the regraded ditch will be routed north of Goddard Road to the existing concrete baffle chute and south of Goddard Road to a new manhole with a grated inlet. These flows will be discharged to the South Diversion Channel through trunkline "A" on the south and trunkline "C" on the north. Please reference Figure 1.7, page 18. These flows are in the order of 0.5 cfs in both directions. The reversionary easement is 30' wide. The reversionary easement will remain in place with the regraded ditch in it.

V. CROSSING STRUCTURE ISSUES

The University of New Mexico has requested that a crossing structure across the South Diversion Channel at the intersection of Goddard and Langham be included in this project.

The South Diversion Channel is a United States Corps of Engineers (USCOE) project that was constructed in the early 1970's. Phase I of a City of Albuquerque project known as the Stadium Blvd. Storm Drain was recently constructed that includes an outfall into the South Diversion Channel immediately south of Stadium Blvd. As part of the design of that project Bohannan-Huston Inc. performed a HEC-2, hydraulic grade line analysis of the South Diversion Channel up to and including 109 feet north of Stadium Blvd. A 100 yr. flow rate of 800 cubic feet per second was established in that analysis for the portion of the South Diversion Channel north of Stadium Blvd. The flow rate of 800 cfs was rounded up from the 100 yr. rates of 730 cfs that was found in the Stadium Boulevard Storm Drain Improvement Engineering Analysis Report. A flow rate of 1100 cfs for the standard project flood was also noted in the report. All flows with the channel are subcritical.

In order to correctly size the channel crossing structure at this point the HEC-2 model prepared in the Stadium Blvd. project was extended to the northern end of the South Diversion Channel. The channel cross-section used in the original model was continued to the end point of the South Diversion Channel. A model was run assuming existing conditions without the new crossing to establish the current hydraulic grade line.

The South Diversion Channel, being a USCOE structure with the western berm acting as a levee, has a requirement for 3 feet of freeboard. The original plans for the channel show a top of

berm elevation ranging from 5036.1 to of 5036.4 from Stadium Blvd. to its northern end point. The HEC-2 model indicates that adequate freeboard exists with both 100 yr. and standard project flood rates with the berms at their design elevations. As built topography for the area indicates, however, that the elevation along the top berm is less than the design grades in some spots. This yields varying freeboard of 2.5' - 3' within this reach. AMAFCA has been informed and will make repairs to the berms to bring them up to the design grades.

The first HEC-2 Model used a 10' by 12' concrete box culvert (CBC) for the crossing. The losses through the culvert increased the upstream depth such that the 3 foot freeboard requirement could not be met even with the berm at its original design elevation. A 12' by 12' CBC was then tried and found to keep the hydraulic grade line below the 3 foot freeboard limit, assuming the berms are repaired to their original design grades. A 12' by 12' CBC can be used for the new road crossing of the South Diversion Channel approximately 500 feet upstream of Stadium Blvd., if the berm is brought up to its original design elevation. Copies of the input and summary output from the HEC-2 models for the existing, 10' by 12' and the 12' by 12' conditions can be found in Appendix D.

The proposed design for the entrance transition is NMSH&TD Standard Concrete Wing Walls. These wing walls provide a gradual transition far superior to the existing square opening in the concrete head wall at the existing concrete box culvert at Stadium Boulevard and the South Diversion Channel. The standard Corps of Engineer transition would require a 200' concrete structure. This extensive entrance transition does not seem appropriate given the results of the HEC-2 Analysis and given the relatively unimproved entrance at the Stadium Boulevard crossing structure.

VI. EXISTING CONDITIONS

A. Site Characteristics

In its undeveloped condition, the site drains toward the west in sheet flow entering AMAFCA's South Diversion Channel. The site elevation differential is approximately 90 feet ranging from a large debris field of surface rubble in the northwest quarter to construction and demolition areas in the southwest corner. The rubble is primarily large pieces of broken concrete. See Figure 1.2, page 13. The majority of the site drains to a ditch on the east side of the South Diversion Channel access road levee. From there, the

runoff is diverted into the South Diversion Channel through a concrete baffle chute near the north end of the channel. The undeveloped condition is anticipated to generate approximately 87.2 cfs in the 100-year, 6-hour storm event including the runoff from the Social Security property.

B. Onsite Drainage Basins

Under existing conditions, the tract of land can be divided into 2 drainage basins. One drains directly onto Stadium Boulevard and the other 20.9 acres drains toward the debris field in the northwest corner. The entire flow from the 20.9 acres is conveyed through an existing 8' wide baffle chute directly into the South Diversion Channel.

C. Off-site Drainage Basins

The 20.9 acre sites is cut-off from the surrounding land with the exception of two smaller sub-basins. Following is a list of the surrounding land and its contribution to the 20.9 acre drainage basin.

1. The APS property to the north is predominately lower than the UNM Science and Technology Park, except at the north end of the South Diversion Channel. The property drains to the west and discharges into the north end of the AMAFCA South Diversion Channel via under ground storm drains and overland flows. Regrading of the parallel interceptor ditch will be made if needed to convey overland flows to the existing baffle chute. This will be determined by a field visit and survey, if required.

2. All land west of the South Diversion Channel and south of Stadium Blvd. is downstream from the Science and Technology Park and there is no runoff contribution to the parcel.

3. The Social Security site drains into an existing detention pond that was designed to discharge runoff at undeveloped flow rates that existed prior to the development of that project. This detention pond will remain on the site in the research park's ultimate buildout and the Social Security property will maintain its current discharge rates using this pond or through other means.

4. Existing Goddard Road contains a high point in front of the newly constructed Optoelectronics Lab where the runoff east of that point drains either to Bradbury toward the east or to Stadium Boulevard toward the south.

5. The existing parking structure and other parcels in the northeast quadrant of the Research Park drain onto existing North Research Park Drive and the runoff is conveyed through a 36" reinforced concrete pipe storm drain to an interim storm drain outlet within the Basehart Road Alignment. The storm drain piping west of the existing parking structure will have to be torn out and rebuilt to match the new alignment and construction plan grades for Basehart. The 100-year flow rate through the 36" storm drain is approximately 137.4 cfs as given in the University Center Research Park Phase IB Office/Light Lab Facility plans (City Project Number - 3588.93). See Figure 2.1, page 22 for the location of the existing 36" storm drain.

VII. PROPOSED DEVELOPED CONDITIONS

The research park was divided into 3 major basins and 7 sub-basins for analysis. Figure 1.5, page 16, shows the outline for the given basins.

Basin A1 drains onto the southern half of Langham in a westerly direction.

Basin A2 is divided into three sub-basins:

A2-A drains onto the southwest half of Goddard,

A2-B drains onto the northeast half of Goddard, and

A2-C drains onto Goddard from the newly constructed Optoelectronics Lab.

Basin A3 is divided into three sub-basins:

A3-A drains westerly onto the east side of Langham,

A3-B drains in a northerly direction onto Basehart, and

A3-C drains northerly onto Basehart.

The eighth basin analyzed was the Social Security site that drains directly into basin A3-C with runoff values consistent with the parcel prior to development. These basins were derived from topographical map and the Research Park's conceptual design; grading plans have not been developed for the parcel, therefore the basin designations are only approximate.

Ultimate buildout was assumed for the analysis and an equal land treatment was applied to all basins, except the Social Security site, for the hydrologic analysis. Using the final grading and drainage plan for the northeast quadrant of the park, the average basin land treatments were found, modified with a factor of safety and applied to the rest of the park. Thus, land treatment for all basins, except for the Social Security Building, was assumed as follows:

A = 0%, B = 20% , C = 10%, and D = 70% (Figure 1.6, page 17).

The concept for the Science & Technology Park is to create a campus-like atmosphere with limited on site parking, and extensive high density parking. This led to a higher percentage of land treatment in category B than usual for this type of development. Drainage was assumed to drain directly onto the roadways with no onsite detention in the ultimate buildout, except for the Social Security Building. A percentage of 100 for category B was used in the runoff calculation for the Social Security site to approximate the developed flow rate.

VIII. EROSION CONTROL

Although this drainage analysis was completed with the assumption of ultimate buildout, it should be noted that Langham / Basehart and Goddard will be constructed prior to any other park development. Therefore, it is of utmost importance that erosion control measures be taken to prevent sediment from settling in the roadway and storm drain system. The maximum grading slope shall be 3:1 for cuts over three feet in height as per design specifications DPM 22.5.A. The slopes within the cut area of the roadway shall be terraced with ditches sloping opposite to the profile grade at a 50:1 slope. The entire disturbed area shall also be seeded to aid in erosion control. In addition, temporary sediment basins will be required at the intersection of Goddard and Langham. See Figure 2.2, page 23 for details.

IX. DRAINAGE RECOMMENDATIONS

The premise for the recommendations below is that the existing overland flow which is collected by the ditch due east of the South Diversion Channel levee and drained through the baffle chute, will continue to drain through the existing baffle chute and a new manhole with a trash rack cover, whether through storm drain or overland flows. Because Langham is in a fill situation parallel to the South Diversion Channel, the remaining land acts as a detention pond preventing a

large portion of water in excess of the 100 yr. Storm from draining to the baffle chute. The storm drain system in the roadway will contain the 100 yr. Storm within the pipe. The drop inlets at the low point of the roadway will be able to transfer any excess water to the baffle chute. These inlets are sized to be able to pass greater than 2 times the 100 yr. flow rate. Figure 1.7, page 18, shows an overview of the drainage requirements for Langham / Basehart and Goddard. The following are recommendations for drainage derived from the analysis above.

A. Trunkline A : Langham @ Stadium

See Figure 1.7, page 18 for turnkline locations. The following are the required components for Trunkline A on Langham at Stadium Blvd. The storm drain plan & profile sheets Figure 1.8, page 19 and Figure 2.4, page 25 are at the end of the report.

Catch Basins

Build 1 - Type Double "C" @ Sta. 11+05.00, 31.00' LT (Langham Stations)

Build 1 - Type Single "A" @ Sta. 11+31.00, 31.00' LT

Build 1 - Type Double "C" @ Sta. 11+00.00, 33.00' RT

Build 1 - Type Single "A" @ Sta. 11+26.00, 33.00' RT

Manholes

4' Dia., Type "E" with beehive grate @ Sta. 11+00.00, 78.00' LT

6' Dia., Type "E" @ Sta. 11+00.00, 36.00' LT

Reinforced Concrete Piping (RCP)

18" RCP between Catch basins

24" RCP between Catch basins and South Diversion Channel

Trunkline A will require a new channel penetration at Station 11+00.00, 122.00' LT. Figure 2.1, page 22, shows a layout of Trunkline A with entering flow rates and the hydraulic grade line shown. The side ditch was not selected to drain trunkline "A" to the baffle chute because it was above the catch basin inverts and could not be regraded to accomplish this option.

B. Trunkline B: Goddard @ Langham

The following are the required components for Trunkline B on Goddard at Langham. The storm drain plan and profile sheets Figure 2.2, page 23 and Figure 2.3, page 24 are included at the end of this report.

Catch Basins

- Build 1 - Type Double "C" @ Sta. 50+60.00, 24.00' LT (Goddard Stations)
- Build 1 - Type Single "A" @ Sta. 50+85.00, 24.00' LT
- Build 1 - Type Double "C" @ Sta. 50+60.00, 16.00' RT
- Build 1 - Type Single "A" @ Sta. 50+85.00, 16.00' RT

Manholes

- 4' Dia., Type "E" @ Sta. 50+47.00, 10.00' LT

Reinforced Concrete Piping (RCP)

- 18" RCP between Catch basins
- 24" RCP between Catch basins and Manhole
- 24" RCP between Manhole and Pipe Penetration @ South Diversion Channel

Trunkline B will require a 24" pipe penetration of the new box culvert crossing structure at Station 48+95.00, 10.00' LT. See Figure 2.7, page 28. If the crossing structure is not built with the other construction, a concrete erosion pad will be required at the given station as an interim condition. Figure 2.2, page 23, shows a layout of Trunkline B with entering flow rates and the hydraulic grade line shown. Figure 2.6, page 27, shows the erosion pad detail.

C. Trunkline C: Langham / Basehart

The following are the required components for Trunkline C along Langham and Basehart. The storm drain plan and profile sheets Figure 1.9 thru 2.1, pages 20 - 22, and Figure 2.5, page 26, are included at the end of this report.

Catch Basins

- Build 1 - Type Single "A" @ Sta. 19+23.00, 19.00' LT
- Build 1 - Type Single "A" @ Sta. 19+48.00, 19.00' LT

Build 1 - Type Single "A" @ Sta. 19+23.00, 19.00' RT

Build 1 - Type Single "A" @ Sta. 19+48.00, 19.00' RT

Build 1 - Type Single "A" @ Sta. 21+50.00, 19.00' RT

Build 1 - Type Single "A" @ Sta. 26+50.00, 19.00' RT

Stubout

Station 25+82.00, 40.00' RT - 24" RCP

Manholes

6' Dia., Type "E" @ Sta. 19+36.00, 12.00' RT

6' Dia., Type "E" @ Sta. 21+50.00, 12.00' RT

6' Dia., Type "E" @ Sta. 23+74.95, 12.00' RT

4' Dia., Type "Tee" @ Sta. 25+40.00, 12.00' RT

4' Dia., Type "E" @ Sta. 25+82.00, 32.00' RT

6' Dia., Type "E" @ Sta. 26+50.00, 12.00' RT

Reinforced Concrete Piping (RCP)

18" RCP between Catch basins in Series and between Catch basins and mainline

42" RCP between existing 36" RCP and Sta. 21+50.00

48" RCP between Sta. 21+50.00 and Sta. 19+36.00

54" RCP between Sta. 19.36 and existing baffle chute

Figure 2.5, page 26, shows a layout of Trunkline C with entering flow rates and the hydraulic grade line.

Figure 2.7, page 28, shows the 54" RCP outfall detail at the existing concrete baffle channel. Calculations were performed to determine if the discharge from the 54" RCP was super critical or subcritical at the dissaptor section of the existing baffle chute. Appendix "E" includes the calculations. It was determined through the energy equations that the flow will be subcritical at the point where it enters the 10' wide section of the baffle chute. The original Corps of Energy design for the South Diversion Channel and the concrete baffle chute are included as Figures 2.8 and 2.9, pages 29 and 30, and Table 1 of Appendix E. The concrete baffle chute was designed for 250 cfs, which is less than the

219.8 cfs in our design. Any splash over that would occur at the discharge location of the 54" RCP would be redirected into the baffle chute by the side ditches.

X. CONCLUSION

This report has presented a drainage management plan for the proposed University of New Mexico Science and Technology Park. The plan as presented provides safe and adequate drainage for the proposed development and surrounding areas. It is requested this plan be approved the design be approved to be incorporated into the construction plans. It is also requested the drainage report be approved for the preliminary plat.

FIGURES

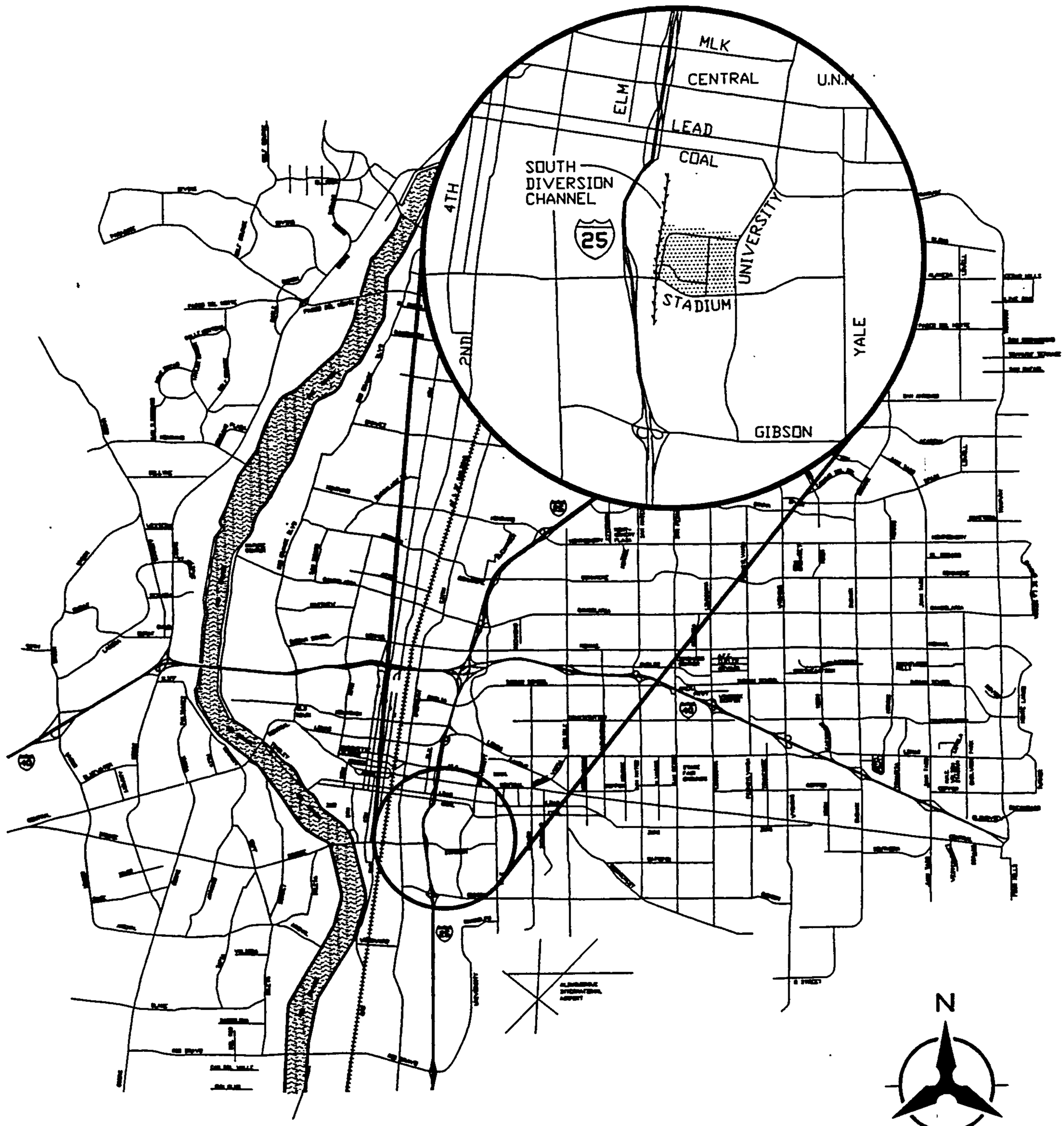

N

NOT TO SCALE

FIGURE 1.1

VICINITY
MAP
JUNE 1996

BOHANNAN-HUSTON INC.
ENGINEERS • PLANNERS • PHOTOGRAMMETRISTS • SURVEYORS • LANDSCAPE • ARCHITECTS
ALBUQUERQUE LAS CRUCES SANTA FE

ARB/TRANS

TRANH (T96281C2202.REPORT)VICMAP.DWG

PROJECT LOCATION

UNIVERSITY CENTER

SU-1 PDA PERMISSIVE USE OF O-1/C-2 AND

UNM SOUTH CAMPUS RESEARCH PARK

UNM SOUTH CAMPUS

O-1

EDUCATION

MUNICIPAL ADDN NO 14

SU-1 TRANSIT FAC

SU-1 CEMETI

ALBUQUERQUE SPORTS COMPLEX

BLVD

STADIUM

HENRICK & CAMPBELL C-3

CR DAVIS PROPERTY

SU-1 PDA PERMISSIVE USE USE OF O-1/O-2 & IP

UNM SOUTH CAMPUS

UNM ARENA

UNM

CLEARANCE

AIRPORT

CLAYTON HEIGHTS

FAIRVIE

KATHRYN

CACTUS/S PARCEI

SUNSHINE TERRACE

LOWELL SCHOOL

SENEVA'S ARROYO

R-3

EVER READY OIL COMPANY

C-1

UNIVERSITY

SOUTH DIVERSION CHANNEL

PSG

SU-1 PRD 600 DU MAX

SU-1 MOTEL & REL FAC

UNIVERSITY VILLAGE

GUADALUPE VILLAGE INC

GIBSON

KIRTLAND

YALE

SU-1 FOR PERMISSI O-1 C-2 & IP

SU-1 FOR PERMISSI

GRAPHIC SCALE IN FEET

250 0 500 1000

CITY OF Albuquerque

ALBUQUERQUE GEOGRAPHIC INFORMATION SYSTEM

PLANNING DEPARTMENT

©Copyright 1996

Map Amended through April 18, 1996

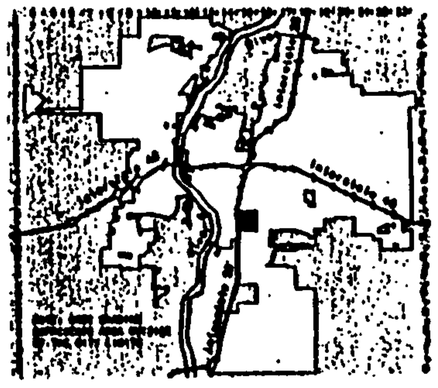

LEGAL DESCRIPTION

TION

R3E

SEC 28

UNIFORM PROPERTY CODE

1-016-056

L-15-Z

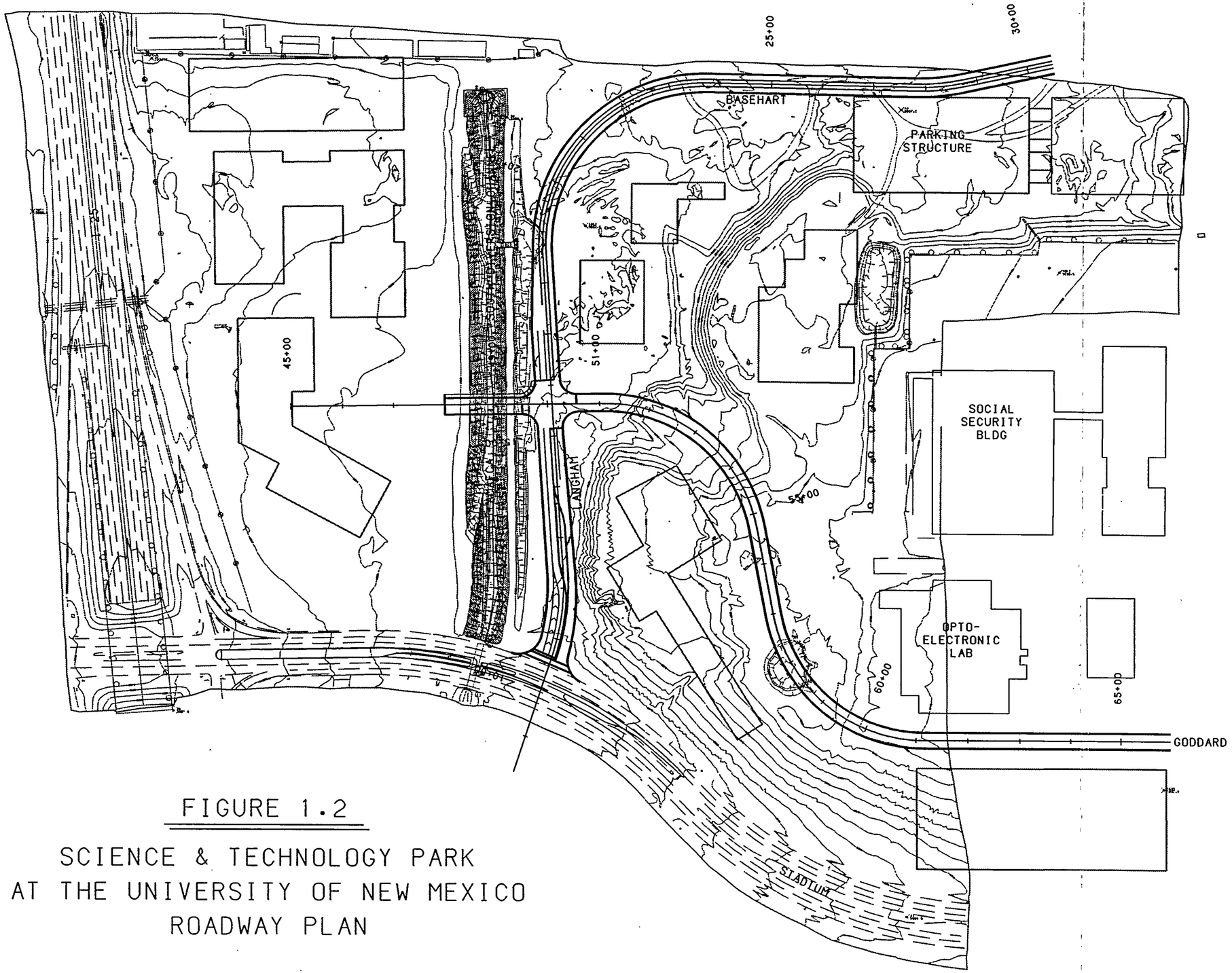

FIGURE 1.2

SCIENCE & TECHNOLOGY PARK
AT THE UNIVERSITY OF NEW MEXICO
ROADWAY PLAN

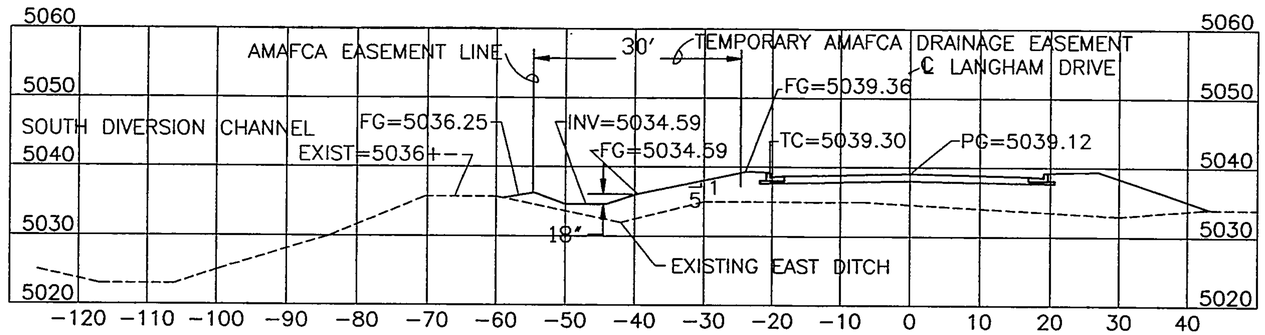

STATION 18+45
LANGHAM DRIVE

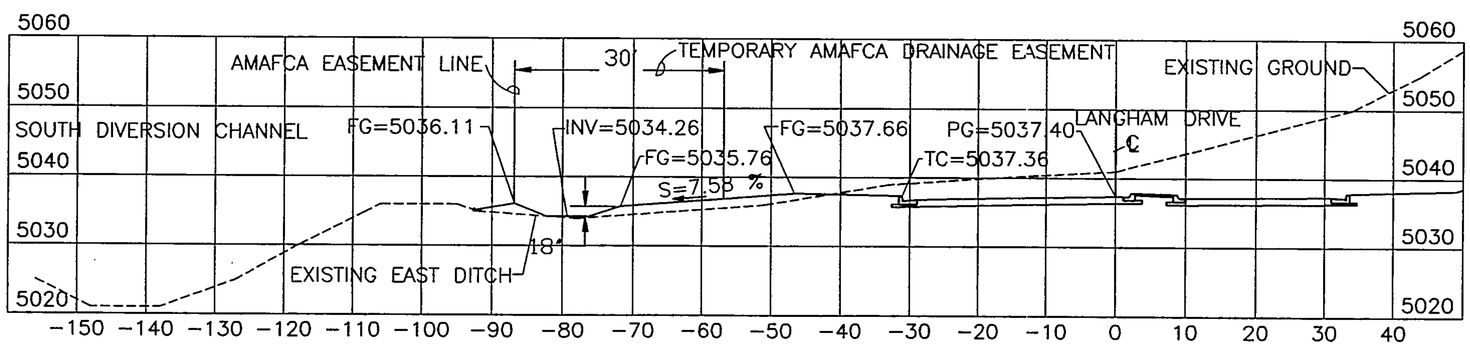

STATION 12+00
LANGHAM DRIVE

AS-BUILT INFORMATION
CONTRACTOR
WORK STAKED BY — DATE
INSPECTOR — DATE
FINAL INSPECTION BY — DATE
DRAWINGS CORRECTED BY — DATE
MICRO-FILM INFORMATION
RECORDED BY — DATE
NO.

BENCH MARKS
NM&SHC STATION I-25-29. ELEVATION=
5031.415 BRASS TABLET SET IN CONCRETE POST FLUSH WITH THE GROUND. LOCATED 1.2 MILES SOUTHEAST OF DOWNTOWN ALBUQUERQUE, AT THE SOUTHEAST CORNER OF THE HWY. I-25 BRIDGE CROSSING OVER STADIUM BLVD.

SURVEY INFORMATION
FIELD NOTES
NO. | BY | DATE

ENGINEER'S SEAL

NO.	DATE	REMARKS	BY
		REVISIONS	
		DESIGN	

DESIGNED BY: DATE:
DRAWN BY: DATE:
CHECKED BY: DATE:

BOHANNAN-HUSTON INC.
ENGINEERS • PLANNERS • PHOTOGRAMMETRISTS • SURVEYORS • LANDSCAPE ARCHITECTS
ALBUQUERQUE LAS CRUCES SANTA FE

CITY OF ALBUQUERQUE
PUBLIC WORKS DEPARTMENT
ENGINEERING DEVELOPMENT GROUP

TITLE: STORM DRAIN
MODIFICATIONS TO AMAFCA DITCH–EAST OF CHANNEL

DESIGN REVIEW COMMITTEE | CITY ENGINEER APPROVAL | LAST DESIGN UPDATE | MO./DAY/YR | MO./DAY/YR.

CITY PROJECT NO. 566581 | ZONE MAP NO. L-15-Z | SHEET | OF

C:\UNMROADS\FIG1-3.DWG 4/2/1997

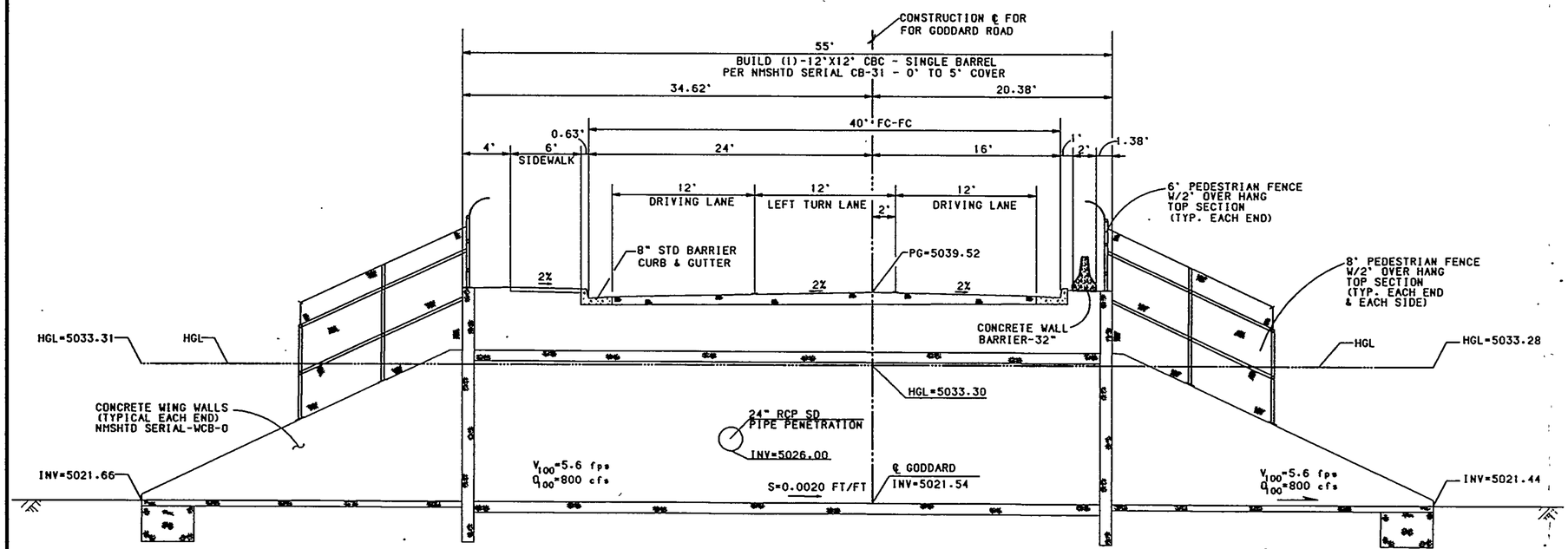

STRUCTURE SECTION

AMAFCA SOUTH DIVERSION CHANNEL
AT GODDARD ROAD
STA 48+90.00

BUILD 1-12'X12'X53' CBC
(NOR) DESIGN 1
BUILD WINGWALLS LT & RT
SERIALS: CB-31, WCB-0

SCALE: 1"=5'

NOTE:

1. BUILD CONCRETE BOX CULVERT PER NMSHTD STANDARD SERIAL W/MODIFIED & EXTENDED TOP WALL OF PARAPET.

ENGINEER'S SEAL

SURVEY INFORMATION

FIELD NOTES

NO.	BY	DATE

BENCH MARKS

NMSHC STATION 1-25-29. ELEVATION =
5031.415 BRASS TABLET SET IN CONCRETE POST FLUSH WITH THE GROUND. LOCATED 1.2 MILES SOUTHEAST OF DOWNTOWN ALBUQUERQUE. AT THE SOUTHEAST CORNER OF THE HWY. I-25 BRIDGE CROSSING OVER STADIUM BLVD.

AS-BUILT INFORMATION

CONTRACTOR — DATE
WORK STAKED BY — DATE
INSPECTOR'S ACCEPTANCE BY — DATE
FIELD VERIFICATION BY — DATE
DRAWINGS CORRECTED BY — DATE

MICRO-FILM INFORMATION

RECORDED BY — DATE
NO.

REVISIONS

NO.	DATE	REMARKS	BY

DESIGN

DESIGNED BY BHI/COA — DATE 1-92
DRAWN BY BHI/COA — DATE 1-92
CHECKED BY BHI/COA — DATE 1-92

FIGURE 1.4

BOHANNAN-HUSTON INC.
ENGINEERS • PLANNERS • PHOTOGRAMMETRISTS • SURVEYORS • LANDSCAPE ARCHITECTS
ALBUQUERQUE LAS CRUCES SANTA FE

CITY OF ALBUQUERQUE
PUBLIC WORKS DEPARTMENT
ENGINEERING GROUP

TITLE: GODDARD ROAD
ADDITIVE ALTERNATE
STRUCTURE SECTION

APPROVALS	ENGINEER	DATE	APPROVALS	ENGINEER	DATE
DRC CHAIRMAN			WATER		
TRANSPORTATION			WASTE WATER		
HYDROLOGY			TRAF. OPER.		

DRAWING NO. 566581 | MAP NO. L-15-Z | SHEET 41 OF 78

TRAN4:CT96281C2202.SHEETS.DRAINAGE3STRCDTL.DWF

15

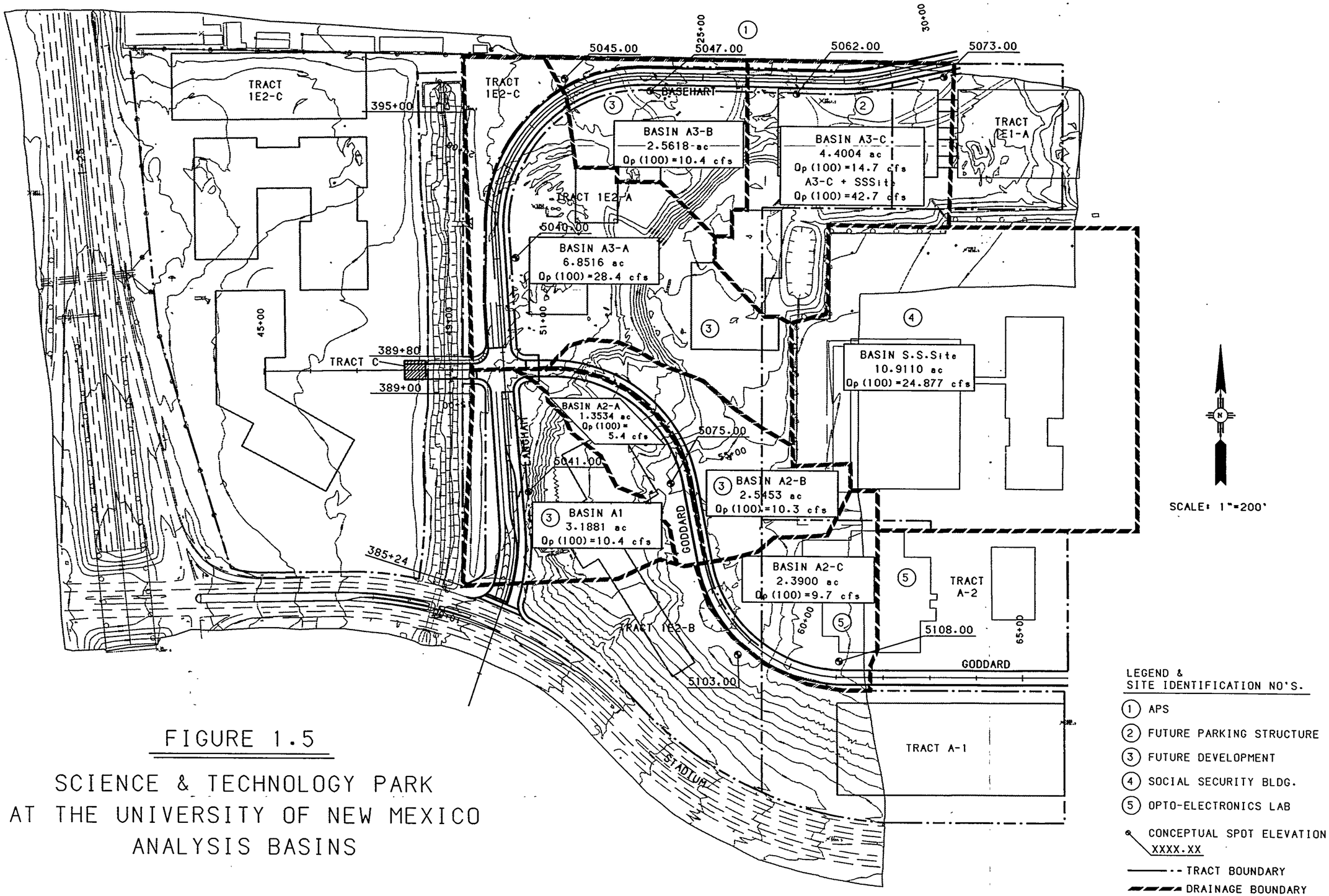

FIGURE 1.5

SCIENCE & TECHNOLOGY PARK
AT THE UNIVERSITY OF NEW MEXICO
ANALYSIS BASINS

Unversity of New Mexico Science & Technology Park Roadways
Hydrological Data

Basin I.D.	Area (ac)	% Land Treatment A	B	C	D	Peak Discharge Qp(10)	Qp(100)	Volume V(10)	V(100)
A1	3.1881	0	20	10	70	8.158	10.4	12,105	20,287
A2-A	1.3534	0	20	10	70	3.463	5.4	5,139	8,612
A2-B	2.5453	0	20	10	70	6.513	10.3	9,664	16,197
A2-C	2.3900	0	20	10	70	6.116	9.7	9,075	15,209
A2 TOTAL	6.2887	0	20	10	70	16.092	25.4	23,878	40,018
A3-A	6.8516	0	20	10	70	17.533	28.4	26,015	43,599
A3-B	2.5618	0	20	10	70	6.556	10.4	9,727	16,302
A3-C	4.4004	0	20	10	70	11.261	14.7	16,708	28,001
SS	10.9110	0	100	0	0	10.365	28.0	11,090	30,893
A3-C+SS	15.3114	0	20	10	70	21.626	42.7	27,798	58,894
A3	13.8138	0	20	10	70	35.350	53.5	52,450	87,902
A3+SS	24.7248	0	20	10	70	45.715	81.5	63,540	118,795
TOTAL	34.2016	0	20	10	70	69.965	117.300	99,523	179,100

FIGURE 1.6

Zone 2					
PEAK DISCHARGE cfs/ac				Excess Precipitation, E (in) 6 Hour Storm	
	10 Year	100 Year		10 Year	100 Year
A	0.38	1.56	A	0.13	0.53
B	0.952	2.28	B	0.28	0.78
C	1.71	3.14	C	0.52	1.13
D	3.14	4.7	D	1.34	2.12

TABLE 1.1

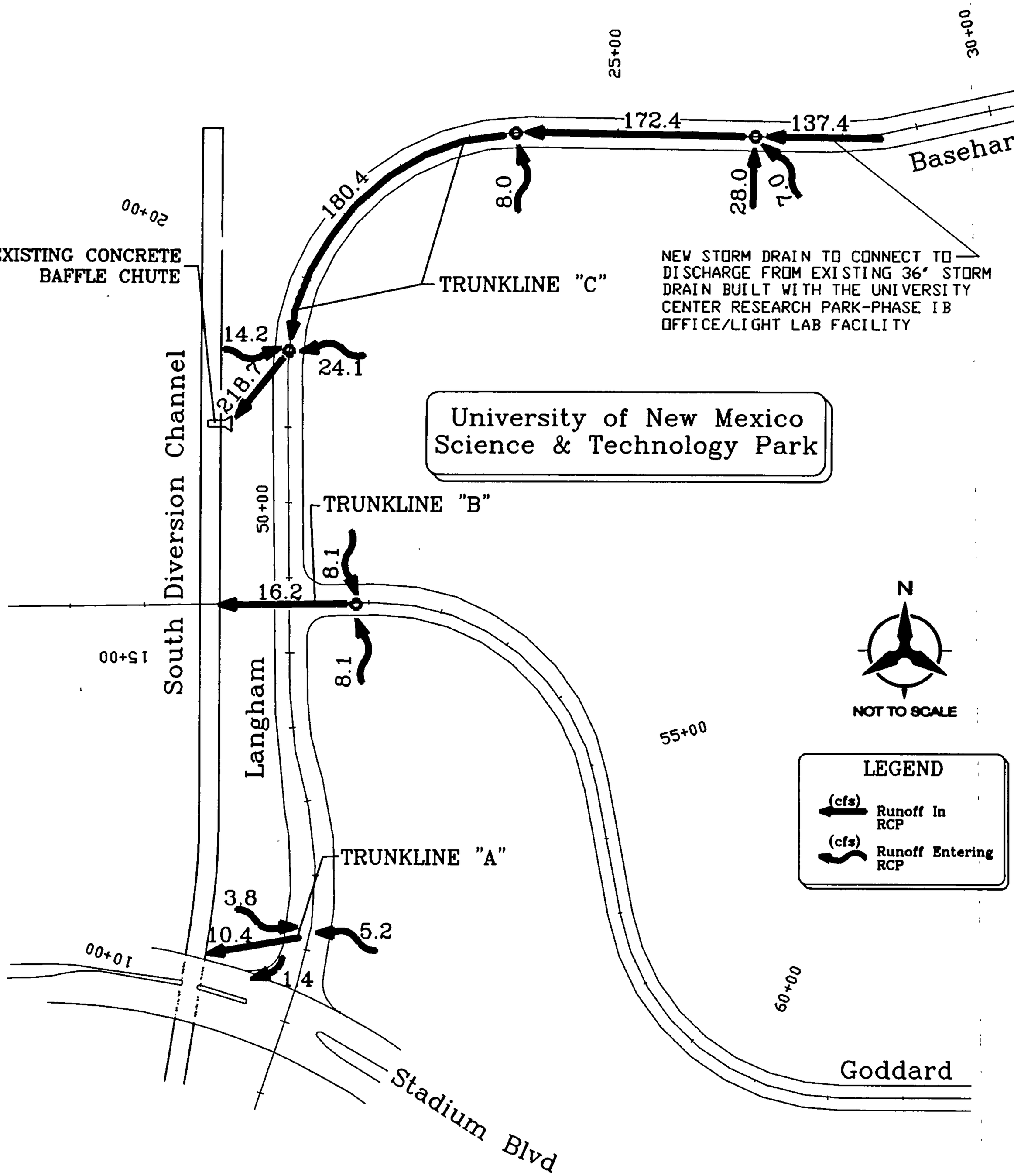

STORM DRAIN FLOW SCHEMATIC

FIGURE 1.7

BOHANNAN-HUSTON INC.
ENGINEERS • PLANNERS • PHOTOGRAMMETRISTS • SURVEYORS • LANDSCAPE ARCHITECTS
ALBUQUERQUE LAS CRUCES SANTA FE

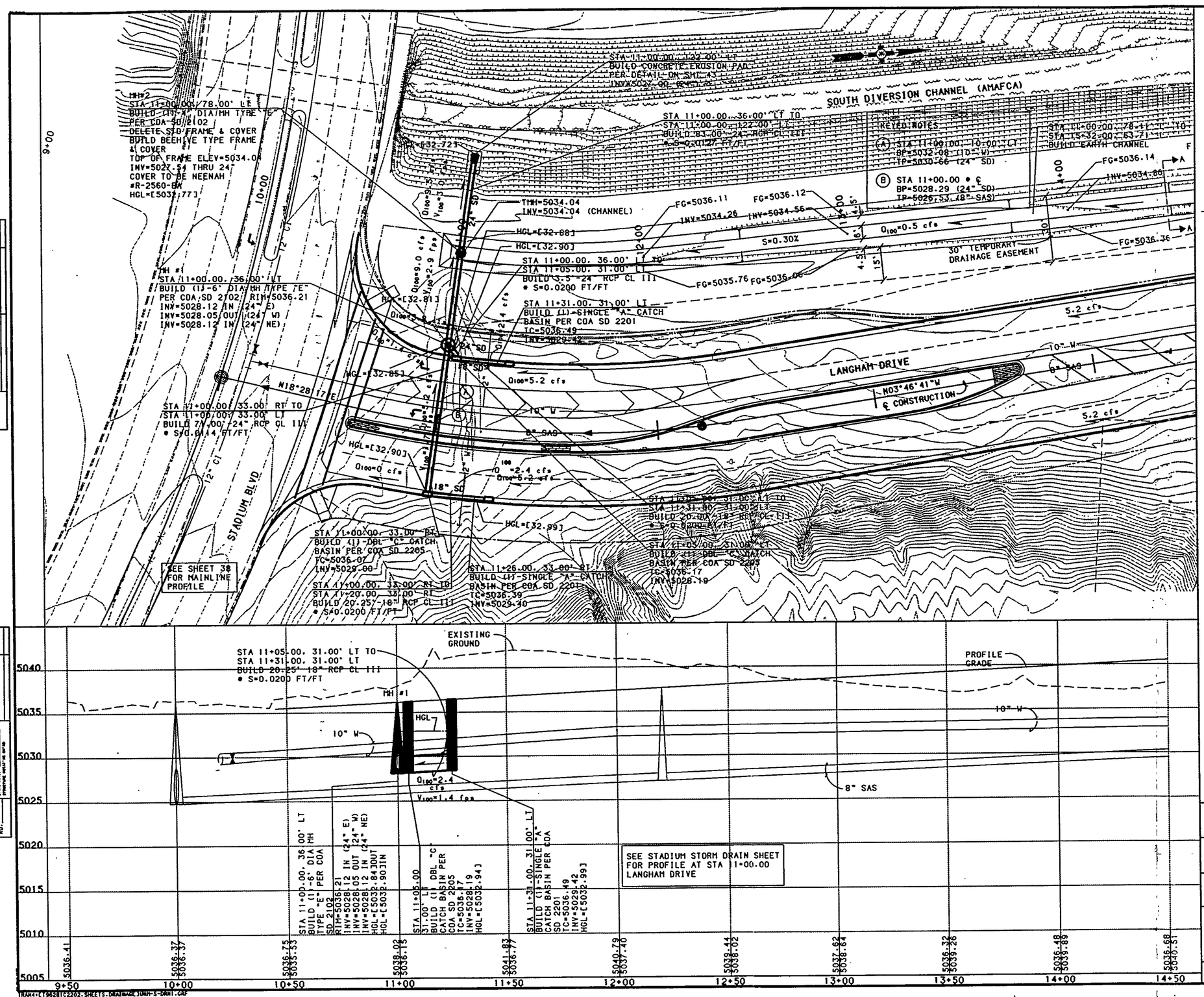

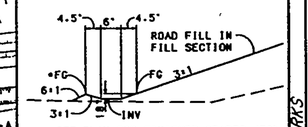

EARTH CHANNEL DETAIL
SECTION "A-A"
LOOKING NORTH

STA 11+00.00 TO STA 15+32.00
STA 16+20.00 TO STA 18+45.00

*NOTE: WHERE FG ON LEFT SIDE IS ABOVE EXISTING GRADE TIE BACK TO EXISTING GRADE WITH 6:1 TIE SLOPE

AS-BUILT INFORMATION
CONTRACTOR — DATE
WORK STAKED BY — DATE
INSPECTOR'S ACCEPTANCE BY — DATE
FIELD VERIFICATION BY — DATE
DRAWINGS CORRECTED BY — DATE

BENCH MARKS
NMSHC STATION 1-25-29. ELEVATION =
5031.415 BRASS TABLET SET IN CONCRETE POST FLUSH WITH THE GROUND. LOCATED 1.2 MILES SOUTHEAST OF DOWNTOWN ALBUQUERQUE, AT THE SOUTHEAST CORNER OF THE HWY. I-25 BRIDGE CROSSING OVER STADIUM BLVD.

MICRO-FILM INFORMATION
RECORDED BY — DATE
NO.

SURVEY INFORMATION
FIELD NOTES

NO.	BY	DATE

ENGINEER'S SEAL

NO.	DATE	REMARKS	BY
		REVISIONS	
		DESIGN	

DESIGNED BY BHI/ARB — DATE 10-96
DRAWN BY BHI/ARB — DATE 10-96
CHECKED BY BHI/ARB — DATE 10-96

BOHANNAN-HUSTON INC.
ENGINEERS • PLANNERS • PHOTOGRAMMETRISTS • SURVEYORS • LANDSCAPE ARCHITECTS
ALBUQUERQUE — LAS CRUCES — SANTA FE

CITY OF ALBUQUERQUE
PUBLIC WORKS DEPARTMENT
ENGINEERING GROUP

TITLE: LANGHAM DRIVE
STA 9+50 TO STA 14+50
STORM DRAIN LINE PLAN & PROFILE

DESIGN REVIEW COMMITTEE	CITY ENGINEER APPROVAL	LAST DESIGN UPDATE	MO./DAY/YR.	MO./DAY/YR.

CITY PROJECT NO.	ZONE MAP NO.	SHEET	OF
566581	L-15-Z	33	78

FIGURE 1.8

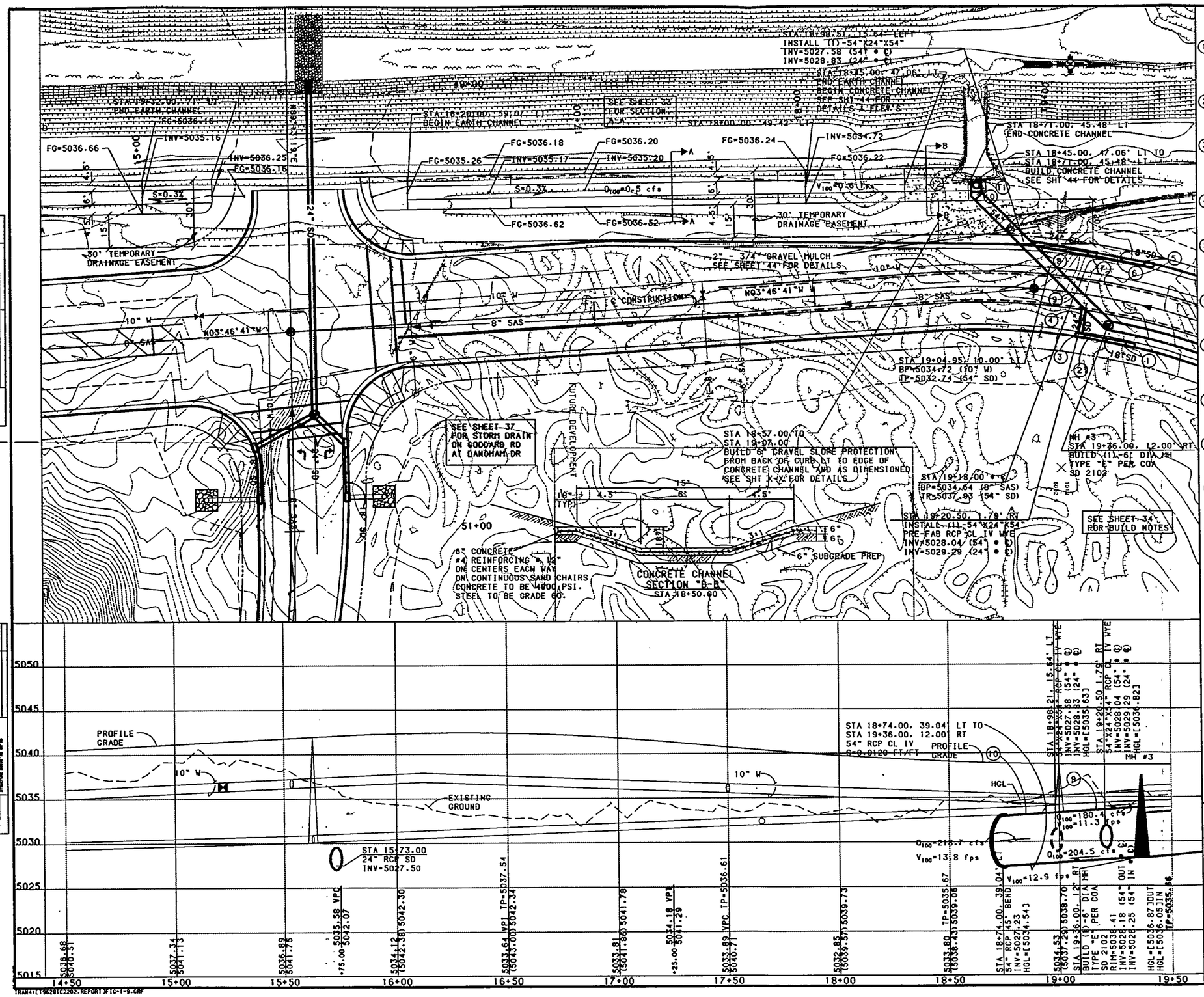

KEYED NOTES

1. STA 19+48.00, 19.00' RT
   BUILD (1) SINGLE "A" CATCH
   BASIN PER COA SD 2205
   TC = 5038.86 INV = 5031.65
   HGL=[5037.37]
2. STA 19+23.00, 19.00' RT TO
   STA 19+48.00, 19.00' RT
   BUILD 20.37' - 18" RCP CL IV
   S = 0.0300 FT/FT
3. STA 19+23.00, 19.00' RT
   BUILD (1) SINGLE "A" CATCH
   BASIN PER COA SD 2205
   TC = 5038.83 INV = 5031.04
   HGL=[5035.91]
4. STA 19+20.50, 1.79' RT TO
   STA 19+23.00, 19.00' RT
   BUILD 15.60' - 24" RCP CL IV
   S = 0.19 FT/FT
5. STA 19+48.00, 19.00' LT
   BUILD (1) SINGLE "A" CATCH
   BASIN PER COA SD 2205
   TC = 5038.86 INV 5031.42
   HGL=[5035.79]
6. STA 19+23.00, 19.00' LT TO
   STA 19+48.00, 19.00' LT
   BUILD 23.28' - 18" RCP CL IV
   S = 0.0300 FT/FT
7. STA 19+23.00, 19.00' LT
   BUILD (1) SINGLE "A" CATCH
   BASIN PER COA SD 2205
   TC = 5038.83 INV = 5030.72
   HGL=[5035.19]
8. STA 18+98.21, 15.64' LT TO
   STA 19+23.00, 19.00' LT
   BUILD 21.65' - 24" RCP CL IV
   S = 0.0823 FT/FT
9. STA 18+74.00, 39.04' LT TO
   STA 19+36.00, 12.00' RT
   BUILD 79.14 - 54" RCP CL IV
   S = 0.0120 FT/FT
10. STA 18+74.00, 39.04' LT
    BUILD (1) 54" RCP, 45° CL IV
    BEND INV=5027.23
    HGL=[5034.40]
11. STA 18+74.00, 39.04' LT TO
    STA 18+74.00, 48.00' LT
    BUILD 8.96' - 54" RCP CL IV
    S = 0.0120 FT/FT
12. STA 18+74.00, 48.00' LT
    BUILD 54" RCP PIPE
    PENETRATION THROUGH
    EXISTING CONCRETE HEADWALL
    SEE DETAIL ON SHEET 42
    FOR PIPE PENETRATION
    DETAIL
    INV ● HEADWALL=5027.12
    (54" WIDTH)
    HGL=[5033.87]

HORIZ SCALE: 1"=20'
VERT SCALE 1"=5'

SURVEY INFORMATION — FIELD NOTES

NO.	BY	DATE

AS-BUILT INFORMATION

CONTRACTOR — DATE
FIELD BOOK — PAGE — DATE
FIELD BY — DATE
DRAWN BY — DATE
REVIEWED BY — DATE
ACCEPTED BY — DATE
RECORDED BY
NO.

BENCH MARKS

NMSHC STATION 1-23-29, ELEVATION = 5031.413 BRASS TABLET SET IN CONCRETE POST FLUSH WITH THE GROUND, LOCATED 1-2 MILES SOUTHEAST OF DOWNTOWN ALBUQUERQUE, AT THE SOUTHEAST CORNER OF THE INT. I-25 BRIDGE CROSSING OVER STADIUM BLVD.

MICRO-FILM INFORMATION

ENGINEER'S SEAL

REVISIONS

NO.	DATE	REMARKS	BY
		DESIGN	

DESIGNED BY BHI/ARB — DATE 10-96
DRAWN BY BHI/ARB — DATE 10-96
CHECKED BY BHI/ARB — DATE 10-96

BOHANNAN-HUSTON INC.
ENGINEERS • PLANNERS • PHOTOGRAMMETRISTS • SURVEYORS • LANDSCAPE ARCHITECTS
ALBUQUERQUE — LAS CRUCES — SANTA FE

CITY OF ALBUQUERQUE
PUBLIC WORKS DEPARTMENT
ENGINEERING GROUP

TITLE: LANGHAM DRIVE
STA 14+50 TO STA 19+50
STORM DRAIN LINE PLAN & PROFILE

DESIGN REVIEW COMMITTEE	CITY ENGINEER APPROVAL	LAST DESIGN UPDATE	MO/DAY/YR.	MO/DAY/YR.

CITY PROJECT NO.	ZONE MAP NO.	SHEET	OF
566581	L-15-Z	34	79

FIGURE 1.9

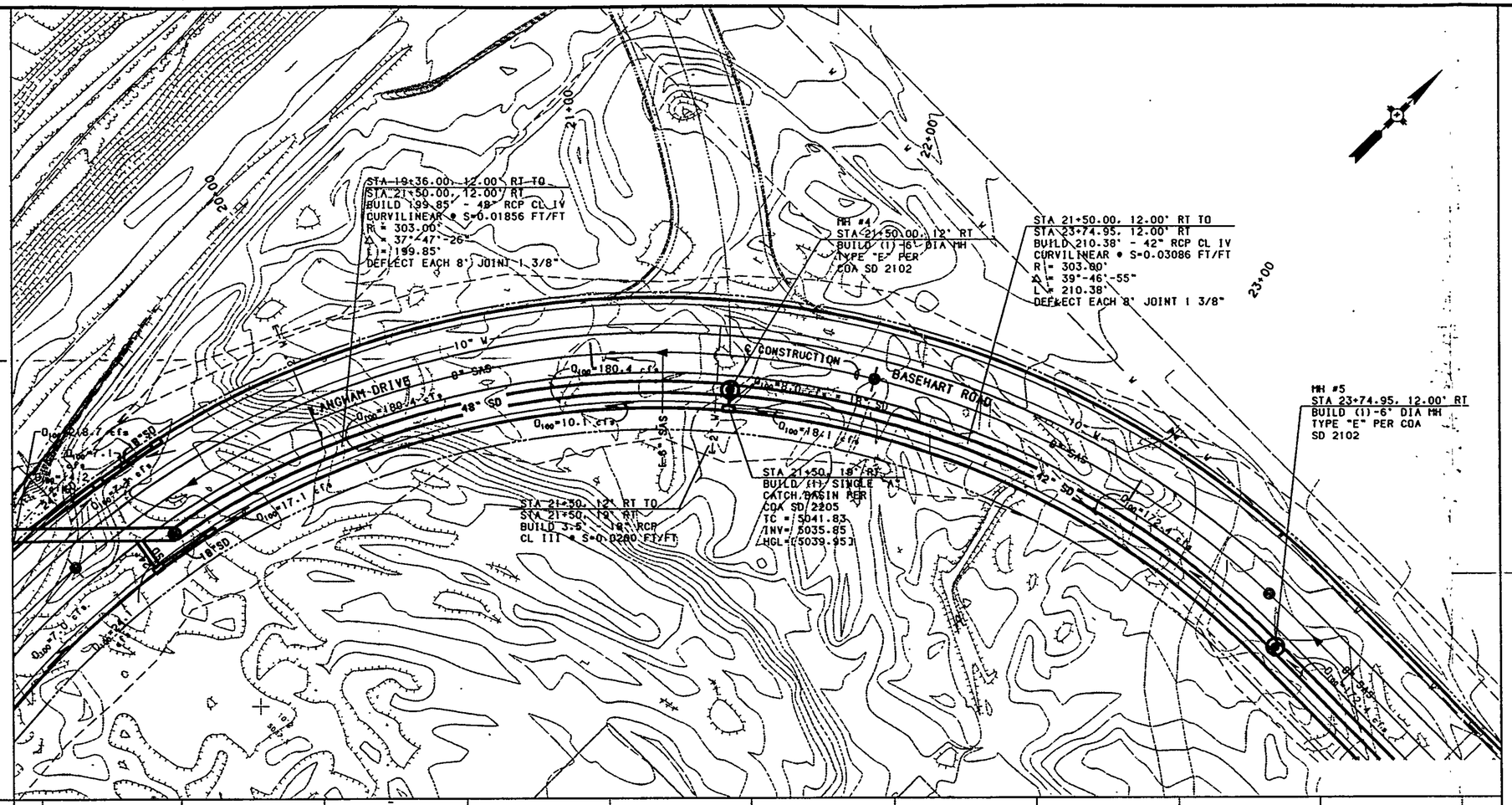

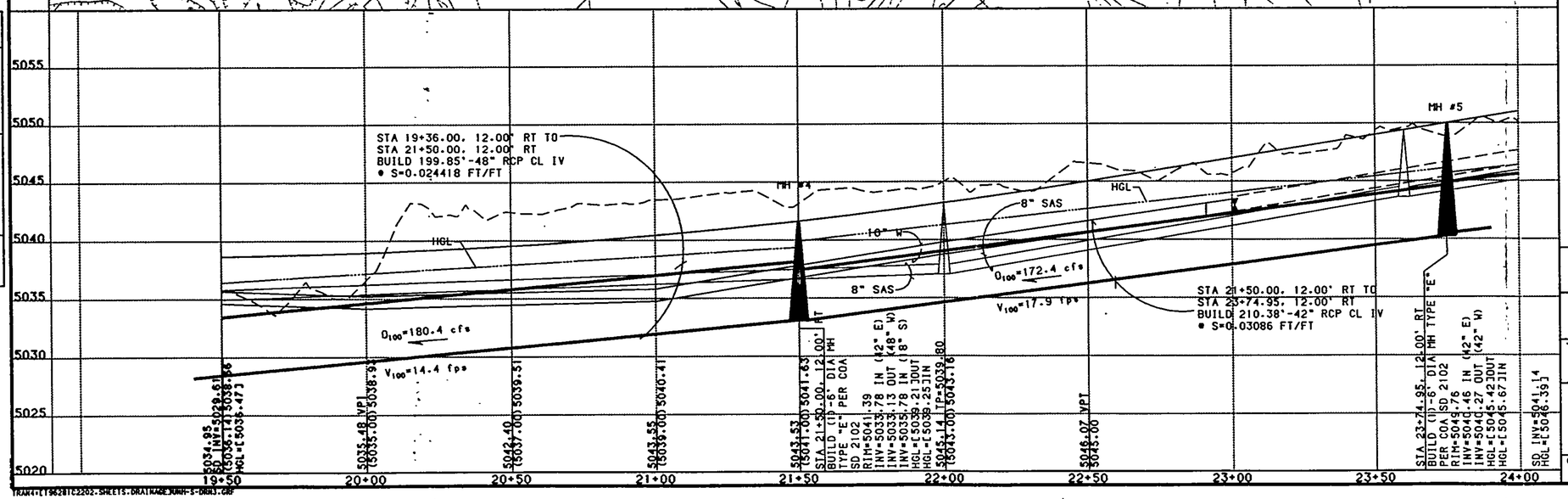

HORIZ SCALE: 1"=20'
VERT SCALE 1"=5'

BOHANNAN-HUSTON INC.
ENGINEERS • PLANNERS • PHOTOGRAMMETRISTS • SURVEYORS • LANDSCAPE ARCHITECTS
ALBUQUERQUE LAS CRUCES SANTA FE

CITY OF ALBUQUERQUE
PUBLIC WORKS DEPARTMENT
ENGINEERING GROUP

TITLE: LANGHAM DR/BASEHART RD
STA 19+50 TO STA 24+00
STORM DRAIN LINE PLAN & PROFILE

DESIGN REVIEW COMMITTEE	CITY ENGINEER APPROVAL	LAST DESIGN UPDATE	MO/DAY/YR.	MO/DAY/YR.

CITY PROJECT NO.	ZONE MAP NO.	SHEET	OF
566581	L-15-Z	35	78

AS-BUILT INFORMATION
CONTRACTOR DATE
WORK STAKED BY DATE
INSPECTED BY DATE
FIELD VERIFICATION BY DATE
DRAWINGS CORRECTED BY DATE
MICRO-FILM INFORMATION
RECORDED BY DATE
NO.

BENCH MARKS
NMSHC STATION 1-25-29. ELEVATION = 5031.415 BRASS TABLET SET IN CONCRETE POST FLUSH WITH THE GROUND. LOCATED 1.2 MILES SOUTHEAST OF DOWNTOWN ALBUQUERQUE, AT THE SOUTHEAST CORNER OF THE HWY. I-25 BRIDGE CROSSING OVER STADIUM BLVD.

SURVEY INFORMATION
FIELD NOTES

NO.	BY	DATE

ENGINEER'S SEAL

NO.	DATE	REMARKS	BY
		REVISIONS	
		DESIGN	

DESIGNED BY BHI/ARB DATE 10-96
DRAWN BY BHI/ARB DATE 10-96
CHECKED BY BHI/ARB DATE 10-96

PLAN NOTE BOOK NO.
PROFILE NOTE BOOK NO.

FIGURE 2.0

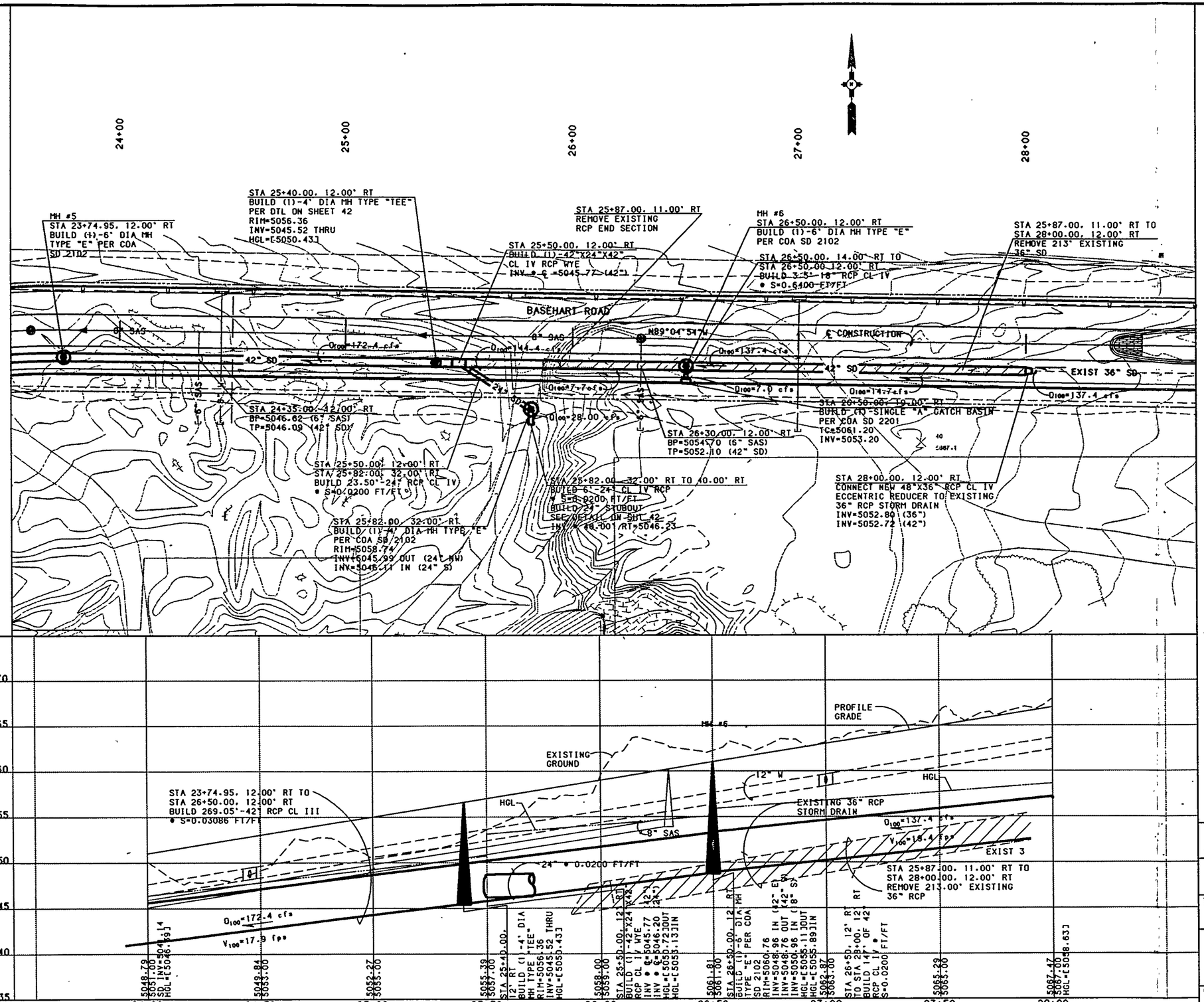

AS-BUILT INFORMATION

CONTRACTOR — DATE
WORK STAKED BY — DATE
INSPECTOR'S ACCEPTANCE BY — DATE
FIELD VERIFICATION BY — DATE
DRAWINGS MARKED BY — DATE
MICRO-FILM INFORMATION
RECORDED BY — DATE
NO.

BENCH MARKS

NMSHC STATION 1-25-29, ELEVATION = 5031.415 BRASS TABLET SET IN CONCRETE POST FLUSH WITH THE GROUND. LOCATED 1.2 MILES SOUTHEAST OF DOWNTOWN ALBUQUERQUE, AT THE SOUTHEAST CORNER OF THE NWT. I-25 BRIDGE CROSSING OVER STADIUM BLVD.

SURVEY INFORMATION

FIELD NOTES

NO.	BY	DATE

ENGINEER'S SEAL

NO.	DATE	REMARKS	BY

REVISIONS

DESIGN

DESIGNED BY BHI/ARB — DATE 10-96
DRAWN BY BHI/ARB — DATE 10-96
CHECKED BY BHI/ARB — DATE 10-96

BOHANNAN-HUSTON INC.
ENGINEERS • PLANNERS • PHOTOGRAMMETRISTS • SURVEYORS • LANDSCAPE ARCHITECTS
ALBUQUERQUE LAS CRUCES SANTA FE

CITY OF ALBUQUERQUE
PUBLIC WORKS DEPARTMENT
ENGINEERING GROUP

TITLE: BASEHART ROAD
STA 24+00 TO STA 28+00
STORM DRAIN LINE PLAN & PROFILE

DESIGN REVIEW COMMITTEE	CITY ENGINEER APPROVAL	LAST DESIGN UPDATE	MO/DAY/YR	MO/DAY/YR

CITY PROJECT NO.	ZONE MAP NO.	SHEET	OF
566581	L-15-Z	36	78

FIGURE 2.1

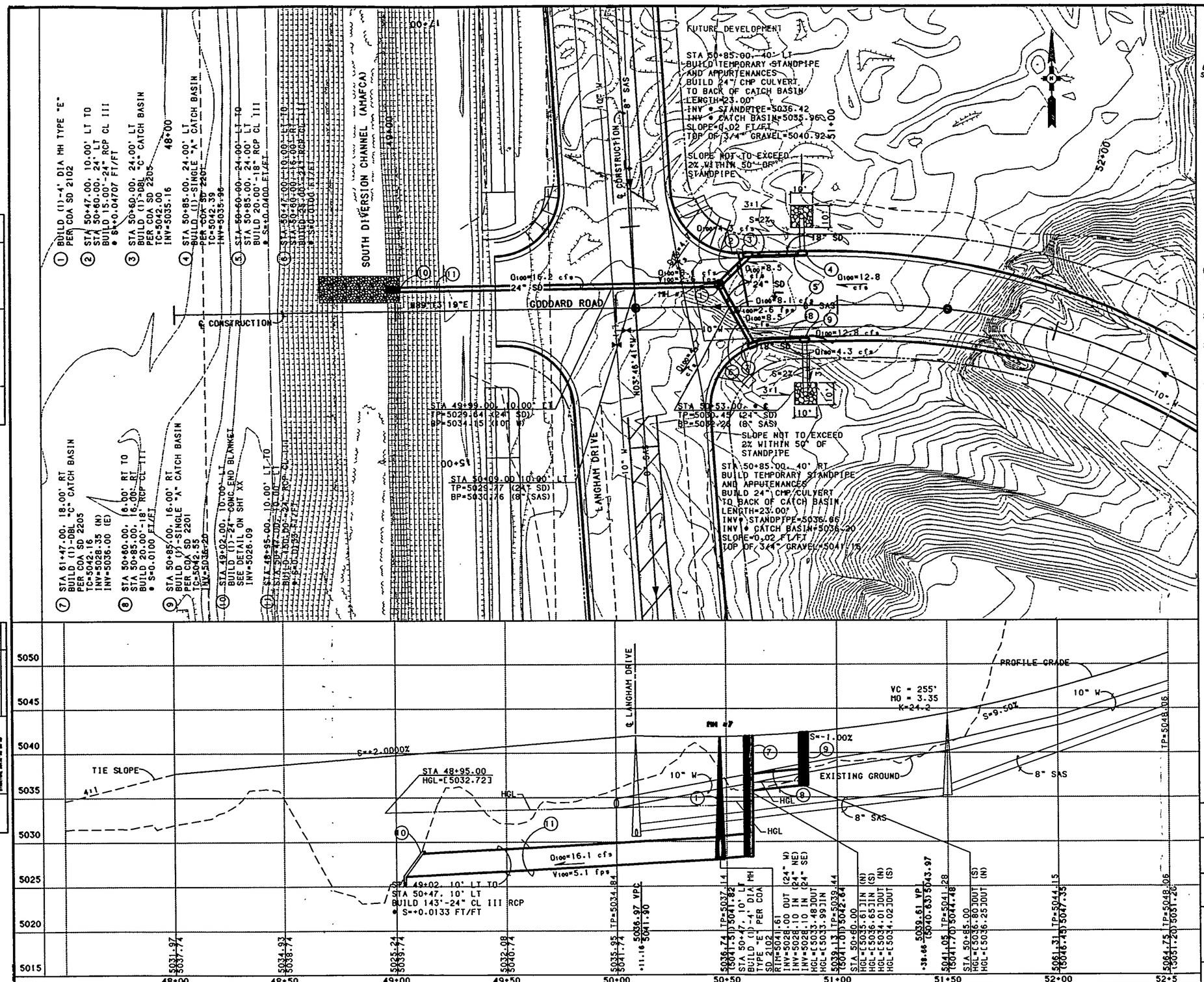

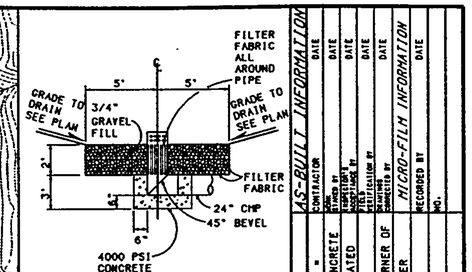

STANDPIPE DETAIL
TEMPORARY SITE DRAIN

QUANTITIES

GRAVEL=7.0 CU YD EA
CONCRETE=0.8 CU YD EA

NOTES:

1. PERFORATE 24" CMP STANDPIPE FROM TOP OF STANDPIPE TO 2' DEPTH W/ 3/4" DIA HOLES W/ROWS @ 3" VERTICAL SPACING & 3" HORIZONTAL SPACING
2. WRAP FILTER FABRIC AROUND STANDPIPE AND LINE PERIMETER SIDES AND BOTTOM OF 3/4" GRAVEL FILL
3. GRADE TO DRAIN SLOPES SHALL BE 3:1 TOWARD ROADWAY AND NOT TO EXCEED 2% 50' STANDPIPE PARALLEL TO ROADWAY
4. THE DEVELOPER WILL CUT THE CMP AT THE BACK OF THE WALL OF THE CATCH BASIN AND CLOSE THE HOLE IN THE CATCH BASIN WALL W/ NON-SHRINK GROUT. THIS WILL OCCUR WHEN THE TRACT IS DEVELOPED ADJACENT TO EACH STANDPIPE. THE STANDPIPES ARE TO REMAIN IN PLACE UNTIL THE TRACTS ARE DEVELOPED

HORIZ SCALE: 1"=20'
VERT SCALE 1"=5'

AS-BUILT INFORMATION
CONTRACTOR — DATE
STAKED BY — DATE
FIELD VERIFIED BY — DATE
PLANS MARKED FOR REVISION BY — DATE
PLANS CORRECTED BY — DATE

BENCH MARKS
NMSHC STATION 1-25-29. ELEVATION =
5031.415 BRASS TABLET SET IN CONCRETE POST FLUSH WITH THE GROUND. LOCATED 1.2 MILES SOUTHEAST OF DOWNTOWN ALBUQUERQUE. AT THE SOUTHEAST CORNER OF THE HWY. I-25 BRIDGE CROSSING OVER STADIUM BLVD.

SURVEY INFORMATION
FIELD NOTES
NO. — BY — DATE

ENGINEER'S SEAL

REVISIONS
NO. — DATE — REMARKS — BY

DESIGN
DESIGNED BY BHI/ARB — DATE 10-96
DRAWN BY BHI/ARB — DATE 10-96
CHECKED BY BHI/ARB — DATE 10-96

MICRO-FILM INFORMATION
RECORDED BY — DATE
NO.

BOHANNAN-HUSTON INC.
ENGINEERS • PLANNERS • PHOTOGRAMMETRISTS • SURVEYORS • LANDSCAPE ARCHITECTS
ALBUQUERQUE — LAS CRUCES — SANTA FE

CITY OF ALBUQUERQUE
PUBLIC WORKS DEPARTMENT
ENGINEERING GROUP

TITLE: GODDARD ROAD
STA 47+50 TO STA 52+50
STORM DRAIN LINE PLAN & PROFILE

DESIGN REVIEW COMMITTEE — CITY ENGINEER APPROVAL — LAST DESIGN UPDATE — MO./DAY/YR. — MO./DAY/YR.

CITY PROJECT NO. 566581 — ZONE MAP NO. L-15-Z — SHEET 37 OF 78

FIGURE 2.2

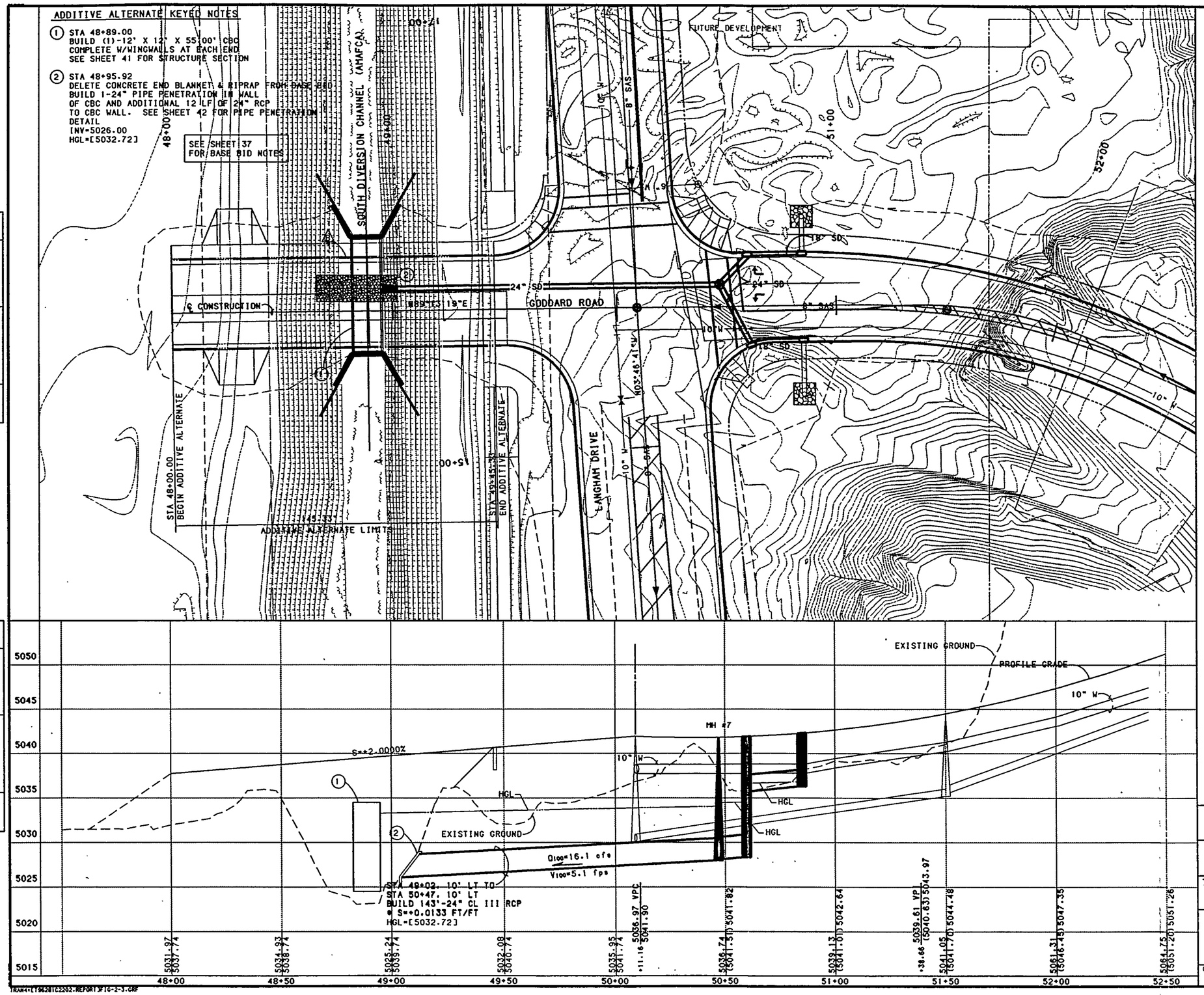
ADDITIVE ALTERNATE KEYED NOTES
① STA 48+89.00
BUILD (1)-12' X 12' X 55'00' CBC
COMPLETE W/WINGWALLS AT EACH END
SEE SHEET 41 FOR STRUCTURE SECTION
② STA 48+95.92
DELETE CONCRETE END BLANKET & RIPRAP FROM BASE BID
BUILD 1-24" PIPE PENETRATION IN WALL
OF CBC AND ADDITIONAL 12 LF OF 24" RCP
TO CBC WALL. SEE SHEET 42 FOR PIPE PENETRATION
DETAIL
INV=5026.00
HGL=[5032.72]
SEE SHEET 37
FOR BASE BID NOTES
SOUTH DIVERSION CHANNEL (AMAFCA)
FUTURE DEVELOPMENT
GODDARD ROAD
LANGHAM DRIVE
℄ CONSTRUCTION
STA 48+00.00
BEGIN ADDITIVE ALTERNATE
STA 49+45.33
END ADDITIVE ALTERNATE
ADDITIVE ALTERNATE LIMITS
EXISTING GROUND
PROFILE GRADE
S=+2.0000%
MH #7
HGL
Q100=16.1 cfs
V100=5.1 fps
STA 49+02, 10' LT TO
STA 50+47, 10' LT
BUILD 143'-24" CL III RCP
@ S=+0.0133 FT/FT
HGL=[5032.72]
HORIZ SCALE 1"=20'
VERT SCALE 1"=5'
BOHANNAN-HUSTON INC.
ENGINEERS • PLANNERS • PHOTOGRAMMETRISTS • SURVEYORS • LANDSCAPE ARCHITECTS
ALBUQUERQUE LAS CRUCES SANTA FE
CITY OF ALBUQUERQUE
PUBLIC WORKS DEPARTMENT
ENGINEERING GROUP
TITLE: GODDARD ROAD - ADDITIVE ALTERNATE
STA 48+00 TO STA 49+45.33
STORM DRAIN LINE PLAN & PROFILE
DESIGN REVIEW COMMITTEE
CITY ENGINEER APPROVAL
LAST DESIGN UPDATE
MO./DAY/YR.
CITY PROJECT NO. 566581
ZONE MAP NO. L-15-Z
SHEET 40 OF 79
AS-BUILT INFORMATION
BENCH MARKS
WHSHC STATION 1-25-29. ELEVATION = 5031.415 BRASS TABLET SET IN CONCRETE POST FLUSH WITH THE GROUND. LOCATED 1.2 MILES SOUTHEAST OF DOWNTOWN ALBUQUERQUE. AT THE SOUTHEAST CORNER OF THE INT. I-25 BRIDGE CROSSING OVER STADIUM BLVD.
CONTRACTOR
DATE
SURVEY INFORMATION
FIELD NOTES
NO. BY DATE
ENGINEER'S SEAL
REVISIONS
NO. DATE REMARKS BY
DESIGN
DESIGNED BY BHI/ARB DATE 10-96
DRAWN BY BHI/ARB DATE 10-96
CHECKED BY BHI/ARB DATE 10-96
RECORDED BY
NO.
PLAN
NOTE BOOK NO.
PROFILE
TRAN4+[T96281C2202.REPORT]FIG-2-3.CRF

FIGURE 2.3

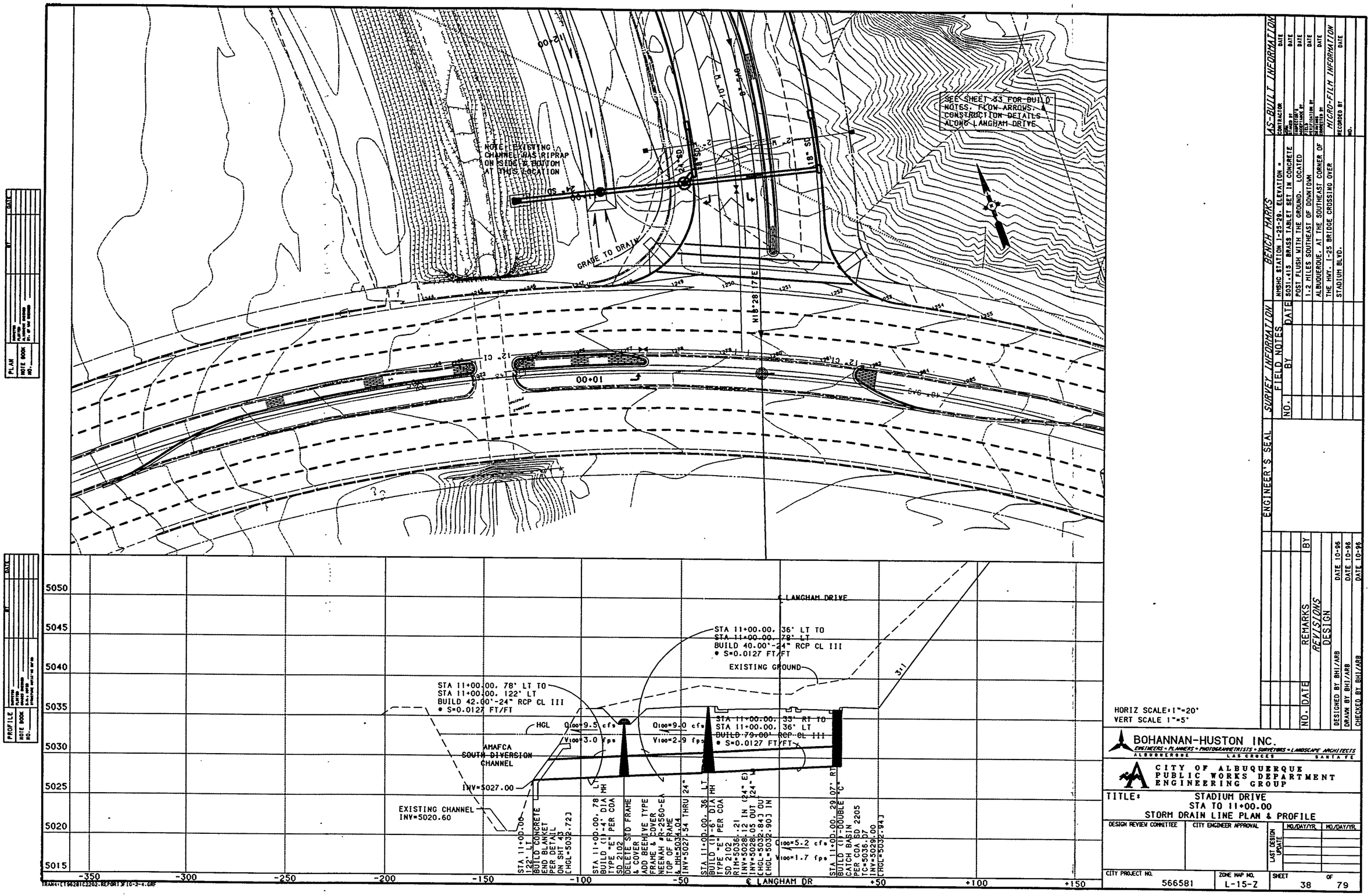
SEE SHEET 33 FOR BUILD NOTES, FLOW ARROWS, & CONSTRUCTION DETAILS ALONG LANGHAM DRIVE
NOTE: EXISTING CHANNEL HAS RIPRAP ON SIDE & BOTTOM AT THIS LOCATION
GRADE TO DRAIN
N18°28'17"E
12+00
10+00
12" CL
18" SD
24" SD
10" SVS
5050
5045
5040
5035
5030
5025
5020
5015
-350
-300
-250
-200
-150
-100
-50
℄ LANGHAM DR
+50
+100
+150
℄ LANGHAM DRIVE
STA 11+00.00, 36' LT TO
STA 11+00.00, 78' LT
BUILD 40.00'-24" RCP CL III
• S=0.0127 FT/FT
EXISTING GROUND
3:1
STA 11+00.00, 78' LT TO
STA 11+00.00, 122' LT
BUILD 42.00'-24" RCP CL III
• S=0.0127 FT/FT
HGL
Q100=9.5 cfs
V100=3.0 fps
Q100=9.0 cfs
V100=2.9 fps
STA 11+00.00, 33' RT TO
STA 11+00.00, 36' LT
BUILD 79.00' RCP CL III
• S=0.0127 FT/FT
AMAFCA
SOUTH DIVERSION
CHANNEL
INV=5027.00
EXISTING CHANNEL
INV=5020.60
STA 11+00.00, 122' LT
BUILD CONCRETE
END BLANKET
PER DETAIL
ON SHT 43
EHGL=5032.72]
STA 11+00.00, 78' LT
BUILD (1)-4' DIA MH
TYPE "E" PER COA
SD 2102
DELETE STD FRAME
& COVER
ADD BEEHIVE TYPE
FRAME & COVER
NEENAH # R-2560-E
TOP OF FRAME
MH=5031.44
INV=5027.54 THRU 24"
STA 11+00.00, 36' LT
BUILD (1)-6' DIA MH
TYPE "E" PER COA
SD 2102
RIM=5036.21
INV=5028.12 IN (24" E)
INV=5028.05 OUT (24" N)
EHGL=5032.84] OUT
EHGL=5032.90] IN
Q100=5.2 cfs
V100=1.7 fps
STA 11+00.00, 29.07' RT
BUILD (1)-DOUBLE "C"
CATCH BASIN
PER COA SD 2205
TN=5035.00
INV=5032.94]
EHGL=5032.94]
HORIZ SCALE:1"=20'
VERT SCALE 1"=5'
PLAN
NOTE BOOK
NO.
DATE
BY
PROFILE
NOTE BOOK
NO.
SEAL
ENGINEER'S SEAL
SURVEY INFORMATION
FIELD NOTES
NO.
BY
DATE
BENCH MARKS
NMSHC STATION I-25-29. ELEVATION = 5031.415 BRASS TABLET SET IN CONCRETE POST FLUSH WITH THE GROUND. LOCATED 1.2 MILES SOUTHEAST OF DOWNTOWN ALBUQUERQUE. AT THE SOUTHEAST CORNER OF THE HWY. I-25 BRIDGE CROSSING OVER STADIUM BLVD.
AS-BUILT INFORMATION
CONTRACTOR
DATE
WORK STAKED BY
DATE
FIELD INSPECTED BY
DATE
FIELD VERIFICATION BY
DATE
DRAWINGS CORRECTED BY
DATE
MICRO-FILM INFORMATION
RECORDED BY
DATE
NO.
NO. DATE
REMARKS
BY
REVISIONS
DESIGN
DESIGNED BY BHI/ARB
DATE 10-96
DRAWN BY BHI/ARB
DATE 10-96
CHECKED BY BHI/ARB
DATE 10-96
BOHANNAN-HUSTON INC.
ENGINEERS • PLANNERS • PHOTOGRAMMETRISTS • SURVEYORS • LANDSCAPE ARCHITECTS
ALBUQUERQUE
LAS CRUCES
SANTA FE
CITY OF ALBUQUERQUE
PUBLIC WORKS DEPARTMENT
ENGINEERING GROUP
TITLE:
STADIUM DRIVE
STA TO 11+00.00
STORM DRAIN LINE PLAN & PROFILE
DESIGN REVIEW COMMITTEE
CITY ENGINEER APPROVAL
LAST DESIGN UPDATE
MO./DAY/YR.
MO./DAY/YR.
CITY PROJECT NO.
566581
ZONE MAP NO.
L-15-Z
SHEET
38
OF
79

FIGURE 2.4

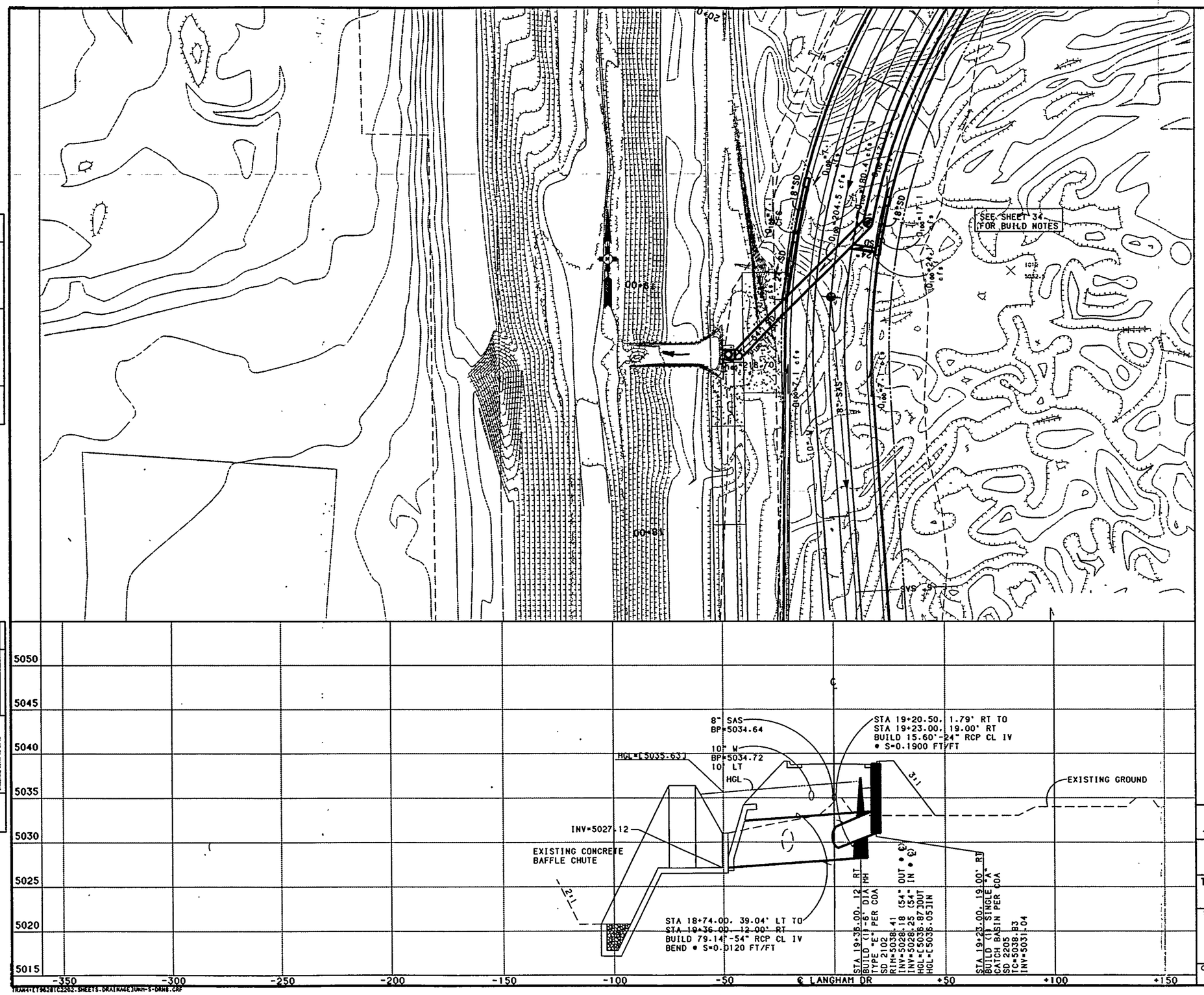

PLAN
NOTE BOOK NO.
DATE

PROFILE
NOTE BOOK NO.
DATE

HORIZ SCALE: 1"=20'
VERT SCALE 1"=5'

ENGINEER'S SEAL

SURVEY INFORMATION

FIELD NOTES

NO.	BY	DATE

BENCH MARKS

MNSHG STATION 1-25-29, ELEVATION = 5031.415 BRASS TABLET SET IN CONCRETE POST FLUSH WITH THE GROUND. LOCATED 1.2 MILES SOUTHEAST OF DOWNTOWN ALBUQUERQUE, AT THE SOUTHEAST CORNER OF THE INT. I-25 BRIDGE CROSSING OVER STADIUM BLVD.

AS-BUILT INFORMATION

CONTRACTOR — DATE
WORK STAKED BY — DATE
INSPECTOR ACCEPTANCE BY — DATE
FIELD VERIFICATION BY — DATE
DRAWINGS CORRECTED BY — DATE

MICRO-FILM INFORMATION

RECORDED BY — DATE
NO.

NO.	DATE	REMARKS	BY
		REVISIONS	
		DESIGN	

DESIGNED BY BHI/ARB — DATE 10-96
DRAWN BY BHI/ARB — DATE 10-96
CHECKED BY BHI/ARB — DATE 10-96

BOHANNAN-HUSTON INC.
ENGINEERS • PLANNERS • PHOTOGRAMMETRISTS • SURVEYORS • LANDSCAPE ARCHITECTS
ALBUQUERQUE LAS CRUCES SANTA FE

CITY OF ALBUQUERQUE
PUBLIC WORKS DEPARTMENT
ENGINEERING GROUP

TITLE: LANGHAM DRIVE
STA 18+78.03
STORM DRAIN LINE PLAN & PROFILE

DESIGN REVIEW COMMITTEE | CITY ENGINEER APPROVAL | LAST DESIGN UPDATE | MO/DAY/YR. | MO/DAY/YR.

CITY PROJECT NO. 566581 | ZONE MAP NO. L-15-Z | SHEET 39 OF 78

FIGURE 2.5

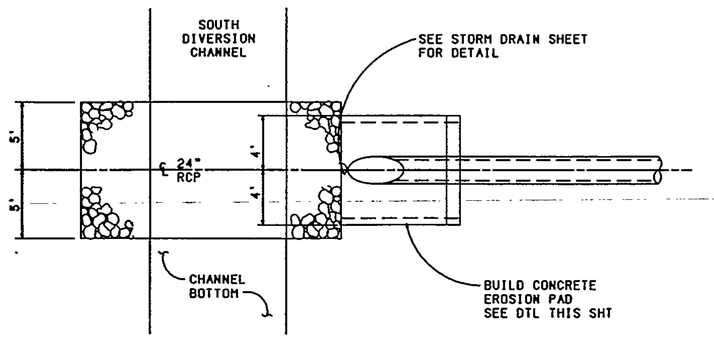

PLAN

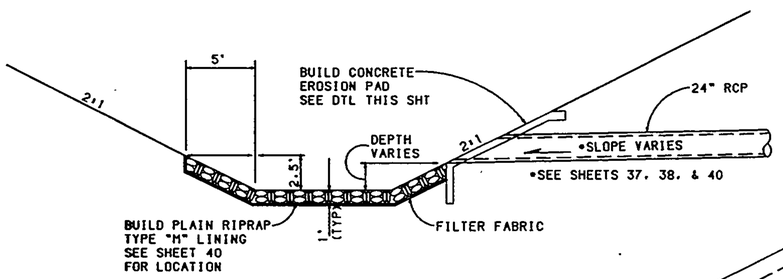

SECTION

SCALE: 1"=5'

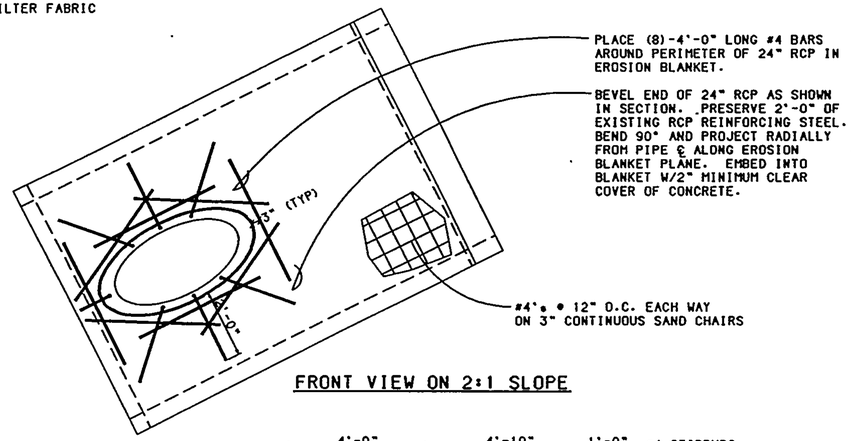

FRONT VIEW ON 2:1 SLOPE

NOTES:

1. RIPRAP LINING IS NOT NEEDED FOR EROSION PAD AT STA 11+00.00, LANGHAM DRIVE. EXISTING CHANNEL RIPRAP IS AT THIS LOCATION.
2. RIPRAP LINING IS NEEDED FOR THE EROSION PAD AT STA 48+95.00, 10' LT. GODDARD ROAD, IF THE BOX CULVERT ADDITIVE ALTERNATE IS NOT SELECTED AT THE TIME THE CONTRACT IS AWARDED.

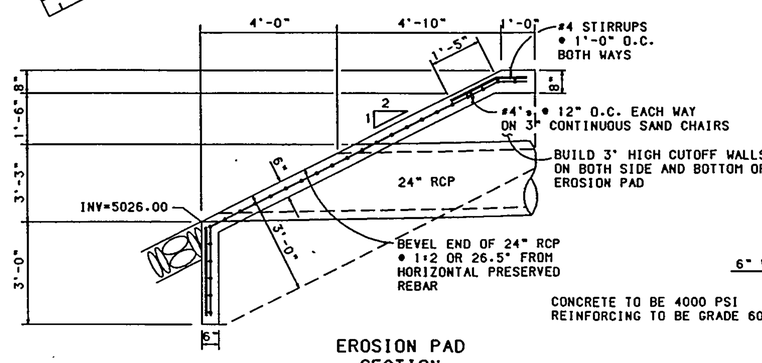

EROSION PAD SECTION

CONCRETE TO BE 4000 PSI
REINFORCING TO BE GRADE 60

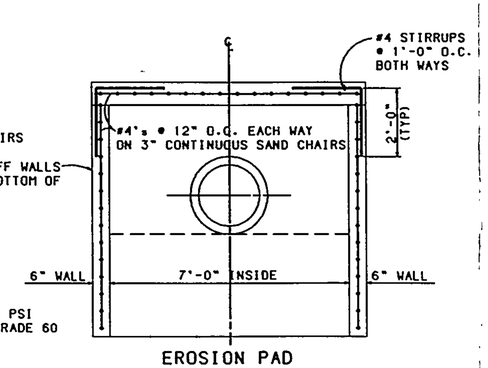

EROSION PAD REAR VIEW

SCALE: 1/2"=1'-0"

AS-BUILT INFORMATION
CONTRACTOR DATE
SURVEY INFORMATION DATE
DRAWN BY DATE
INSPECTOR'S ACCEPTANCE BY DATE
FIELD VERIFICATION BY DATE
DATE
MICRO-FILM INFORMATION
RECORDED BY DATE
NO. DATE

BENCH MARKS
NMSHC STATION I-25-29. ELEVATION =
5031.415 BRASS TABLET SET IN CONCRETE POST FLUSH WITH THE GROUND. LOCATED 1.2 MILES SOUTHEAST OF DOWNTOWN ALBUQUERQUE, AT THE SOUTHEAST CORNER OF THE HWY. I-25 BRIDGE CROSSING OVER STADIUM BLVD.

SURVEY INFORMATION
FIELD NOTES
NO. BY DATE

ENGINEER'S SEAL

REVISIONS
NO. DATE REMARKS BY
DESIGN
DESIGNED BY BHI/CDA DATE 4-97
DRAWN BY BHI/CDA DATE 4-97
CHECKED BY BHI/CDA DATE 4-97

BOHANNAN-HUSTON INC.
ENGINEERS • PLANNERS • PHOTOGRAMMETRISTS • SURVEYORS • LANDSCAPE ARCHITECTS
ALBUQUERQUE LAS CRUCES SANTA FE

CITY OF ALBUQUERQUE
PUBLIC WORKS DEPARTMENT
ENGINEERING GROUP

TITLE:
STORM DRAIN
24" OUTFALL EROSION PAD DETAIL

APPROVALS	ENGINEER	DATE	APPROVALS	ENGINEER	DATE
DRC CHAIRMAN			WATER		
TRANSPORTATION			WASTE WATER		
HYDROLOGY			TRAF. OPER.		

DRAWING NO. 566581 | MAP NO. L-15-Z | SHEET OF

TRAN4:[T96201C2202.REPORT]FIG-2-6.DWF

FIGURE 2.6

CONSTRUCTION NOTES:

A. COMPACT ALL BACKFILL AROUND MANHOLE TO 95%.

B. PRECAST REINFORCED CONCRETE ECCENTRIC CONE.

C. USE MAXIMUM 4 COURSES GRADE MS BRICK FOR FUTURE ADJUSTMENT OF FRAME PLASTER INSIDE WITH 1/2" MORTAR.

D. USE A 5' X 5' CONCRETE PAD IN ALL AREAS.

E. MANHOLE FRAME AND COVER 2'-6"ø w/ FRAME ASTM-48 CLASS 30B. MARKED AS "STORM SEWER".

F. IN UNPAVED AREAS SET FRAME TO GRADE AND SLOPE TOP OF PAD.

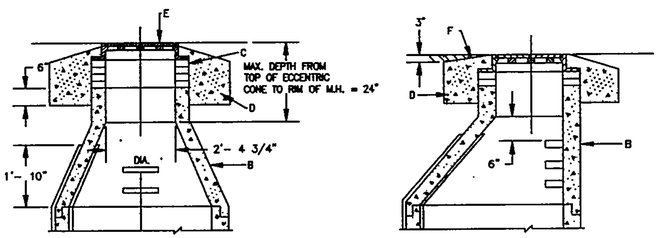

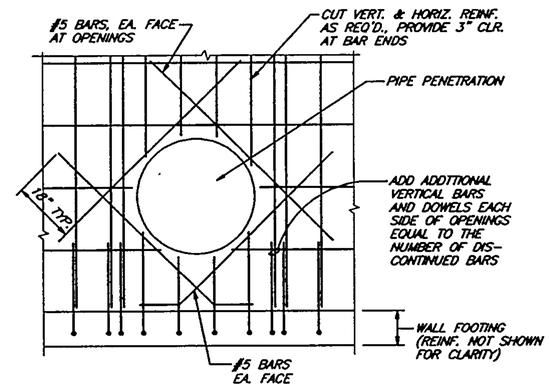

REINFORCING DETAIL @ PIPE PENETRATION

NO SCALE

SEE DETAIL ABOVE FOR CONE MH TOP

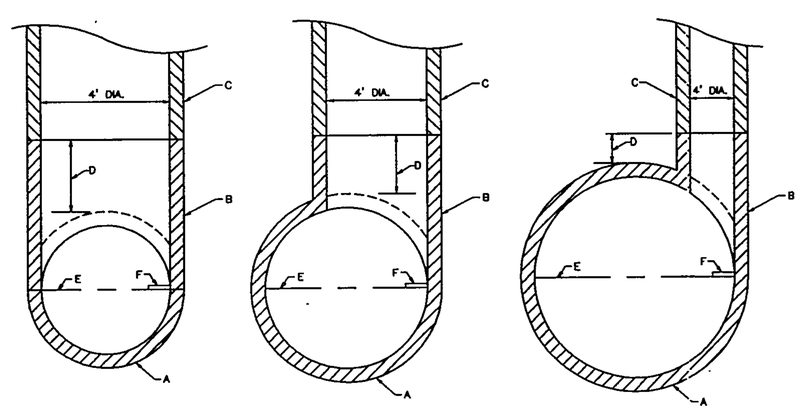

TEE TYPE MANHOLE

N.T.S.

GENERAL NOTES:

1. MANHOLE STEPS ARE REQUIRED FOR MANHOLES DEEPER THAN 5 FEET. LOWEST STEP SHOULD BE AT THE SPRINGLINE OF THE SEWER PIPE.
2. FIELD FABRICATION OF TEE OR ECCENTRIC PIPE UNIT WILL NOT BE ACCEPTED.
3. VERTICAL PIPE SHALL BE CENTERED HORIZONTAL STORM SEWER PIPE SECTION.

CONSTRUCTION NOTES:

A. STORM SEWER PIPE
B. PRECAST VERTICAL PIPE
C. PRECAST MANHOLE RISERS
D. TOP OF VERTICAL PIPE MINIMUM 18" ABOVE TOP OF MAINLINE PIPE
E. SPRINGLINE
F. LOWEST MANHOLE STEP (IF STEPS REQUIRED)

AS-BUILT INFORMATION
CONTRACTOR — DATE
WORK STAKED BY — DATE
INSPECTOR'S ACCEPTANCE BY — DATE
VERIFICATION BY — DATE
CORRECTED BY — DATE
MICRO-FILM INFORMATION
RECORDED BY — DATE
NO.

BENCH MARKS
NGS/HC STATION I-25-29, ELEVATION=
5031.415 BRASS TABLET SET IN CONCRETE POST FLUSH WITH THE GROUND. LOCATED 1.2 MILES SOUTHEAST OF DOWNTOWN ALBUQUERQUE, AT THE SOUTHEAST CORNER OF THE HWY. I-25 BRIDGE CROSSING OVER STADIUM BLVD.

SURVEY INFORMATION
FIELD NOTES
NO. | BY | DATE

ENGINEER'S SEAL

NO.	DATE	REMARKS	BY
		REVISIONS	
		DESIGN	

DESIGNED BY: DATE:
DRAWN BY: DATE:
CHECKED BY: DATE:

BOHANNAN-HUSTON INC.
ENGINEERS • PLANNERS • PHOTOGRAMMETRISTS • SURVEYORS • LANDSCAPE ARCHITECTS
ALBUQUERQUE LAS CRUCES SANTA FE

CITY OF ALBUQUERQUE
PUBLIC WORKS DEPARTMENT
ENGINEERING DEVELOPMENT GROUP

TITLE: STORM DRAIN MISCELLANEOUS DETAILS

DESIGN REVIEW COMMITTEE | CITY ENGINEER APPROVAL | LAST DESIGN UPDATE | MO./DAY/YR. | MO./DAY/YR.

CITY PROJECT NO. 566581 | ZONE MAP NO. L-15 | SHEET 42 OF 78

FIGURE 2.7a

TRAN4:[T96281C2202.SHEETS.DRAINAGE]DRAINDTL.DWG

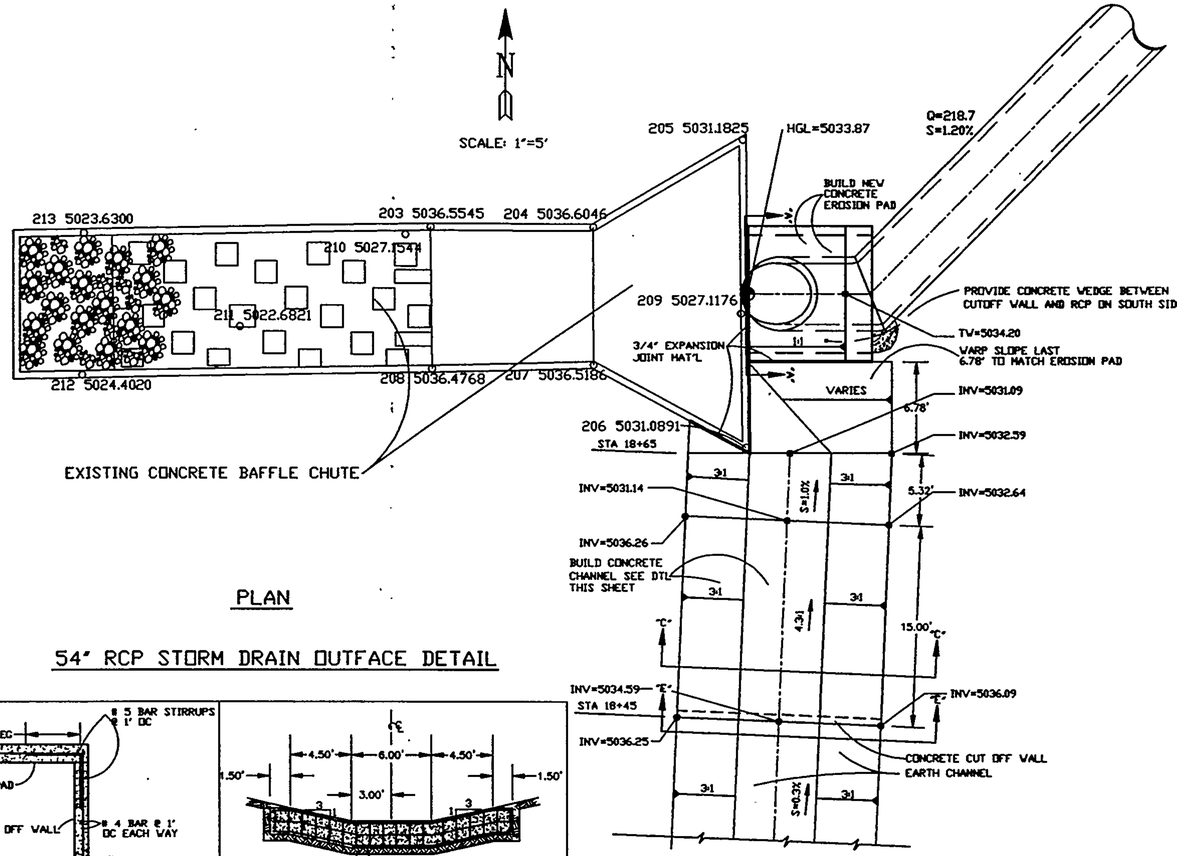

PLAN

54" RCP STORM DRAIN OUTFACE DETAIL

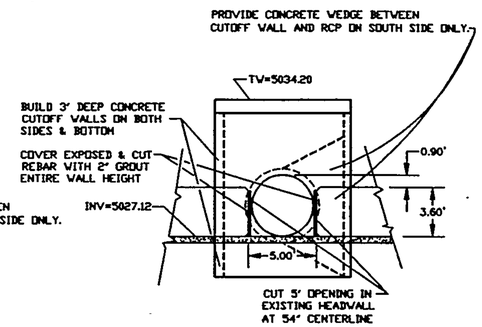

SECTION "A"-A"

MODIFICATIONS TO EXISTING BAFFLE CHUTE HEAD WALL

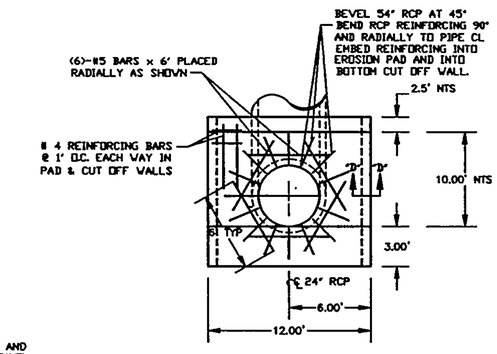

SECTION "B"-B"

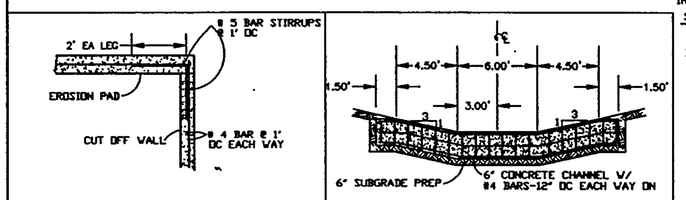

SECTION "D"-D"

PAD/WALL JOINT DETAIL

SECTION "E"-E"

CUT OFF WALL DETAIL

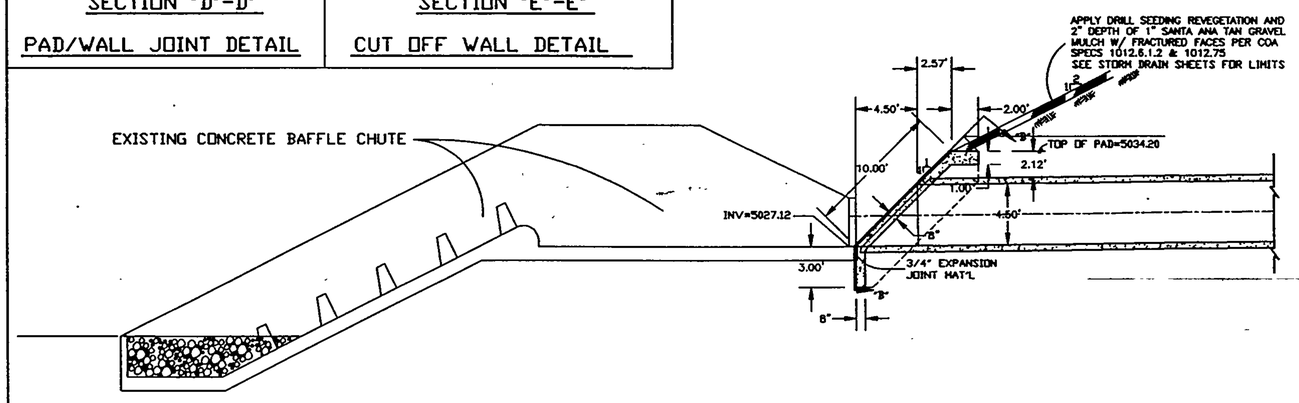

SECTION

54" RCP STORM DRAIN OUT FALL DETAIL

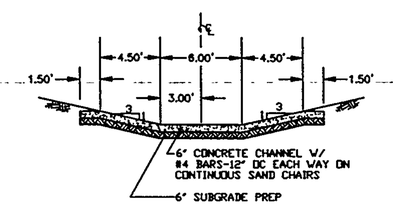

SECTION "C"-C"

CONCRETE CHANNEL SECTION

NOTES:

1. CONCRETE TO BE 4,000 PSI
2. REINFORCING STEEL TO BE GRADE 60.

AS-BUILT INFORMATION
CONTRACTOR / DATE
WORK STAKED BY / DATE
INSPECTOR ACCEPTANCE BY / DATE
FIELD INSPECTION BY / DATE
DRAWINGS CORRECTED BY / DATE
MICRO-FILM INFORMATION
RECORDED BY / DATE
NO.

BENCH MARKS
NMSHC STATION I-25-29. ELEVATION=
5031.415 BRASS TABLET SET IN CONCRETE POST FLUSH WITH THE GROUND. LOCATED 1.2 MILES SOUTHEAST OF DOWNTOWN ALBUQUERQUE, AT THE SOUTHEAST CORNER OF THE HWY. I-25 BRIDGE CROSSING OVER STADIUM BLVD.

SURVEY INFORMATION
FIELD NOTES
NO. / BY / DATE

ENGINEER'S SEAL

REVISIONS
NO. / DATE / REMARKS / BY
DESIGN
DESIGNED BY: DATE:
DRAWN BY: DATE:
CHECKED BY: DATE:

BOHANNAN-HUSTON INC.
ENGINEERS • PLANNERS • PHOTOGRAMMETRISTS • SURVEYORS • LANDSCAPE ARCHITECTS
ALBUQUERQUE LAS CRUCES SANTA FE

CITY OF ALBUQUERQUE
PUBLIC WORKS DEPARTMENT
ENGINEERING DEVELOPMENT GROUP

TITLE: STORM DRAIN
54" STORM DRAIN OUT FALL DETAILS

DESIGN REVIEW COMMITTEE | CITY ENGINEER APPROVAL | LAST DESIGN UPDATE | MO./DAY/YR. | MO./DAY/YR.

CITY PROJECT NO. 566581 | ZONE MAP NO. L-15-Z | SHEET 44 OF 78

C:\UNHROADS\BAFFLE.DWG 7/15/97 BHLPCP

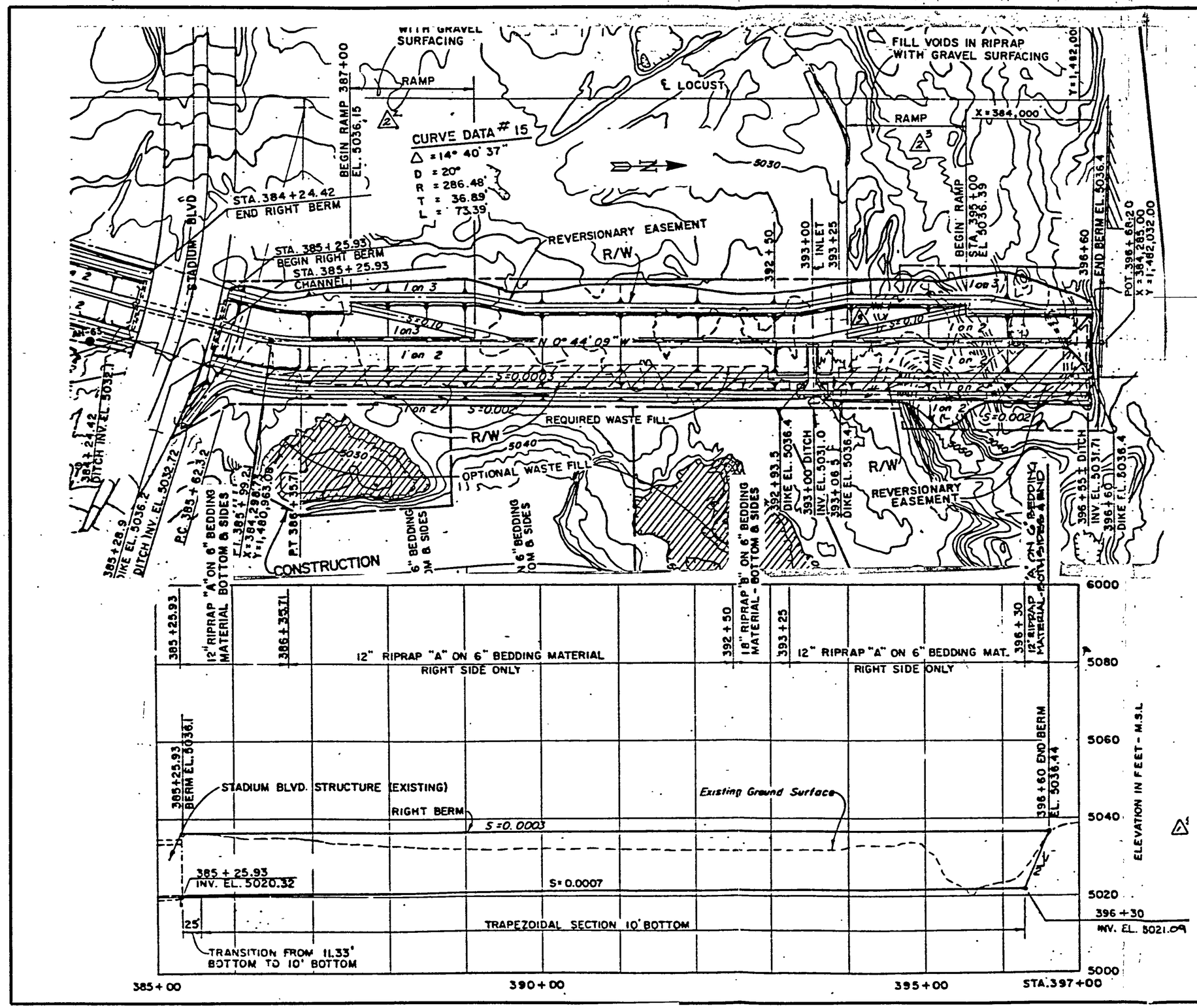

PROFILE

ENGINEER'S SEAL

SURVEY INFORMATION
FIELD NOTES

NO.	BY	DATE

BENCH MARKS

NMSHC STATION I-25-29 ELEVATION:
5031.415 BRASS TABLET SET IN CONCRETE POST FLUSH WITH THE GROUND. LOCATED 1.2 MILES SOUTHEAST OF DOWNTOWN ALBUQUERQUE, AT THE SOUTHEAST CORNER OF THE INTY. I-25 BRIDGE CROSSING OVER STADIUM BLVD.

AS-BUILT INFORMATION

CONTRACTOR — DATE
WORK STAKED BY — DATE
INSPECTED BY — DATE
PLANS CORRECTED BY — DATE
MICRO-FILM INFORMATION
RECORDED BY — DATE
NO.

NO.	DATE	REMARKS	BY
		REVISIONS	
		DESIGN	

DESIGNED BY: DATE:
DRAWN BY: DATE:
CHECKED BY: DATE:

BOHANNAN-HUSTON INC.
ENGINEERS • PLANNERS • PROFESSIONAL SURVEYORS • LANDSCAPE ARCHITECTS
ALBUQUERQUE LAS CRUCES SANTA FE

CITY OF ALBUQUERQUE
PUBLIC WORKS DEPARTMENT
ENGINEERING DEVELOPMENT GROUP

TITLE: US ARMY CORPS OF ENGINEERS
SOUTH DIVERSION CHANNEL ORIGINAL DESIGN

DESIGN REVIEW COMMITTEE | CITY ENGINEER APPROVAL | LAST DESIGN UPDATE | MO./DAY/YR. | MO./DAY/YR.

CITY PROJECT NO. 566581 | ZONE MAP NO. L-15-Z | SHEET | OF

C:\UNROADS\SBCCDE.DWG 4/10/1997

29 FIGURE 9

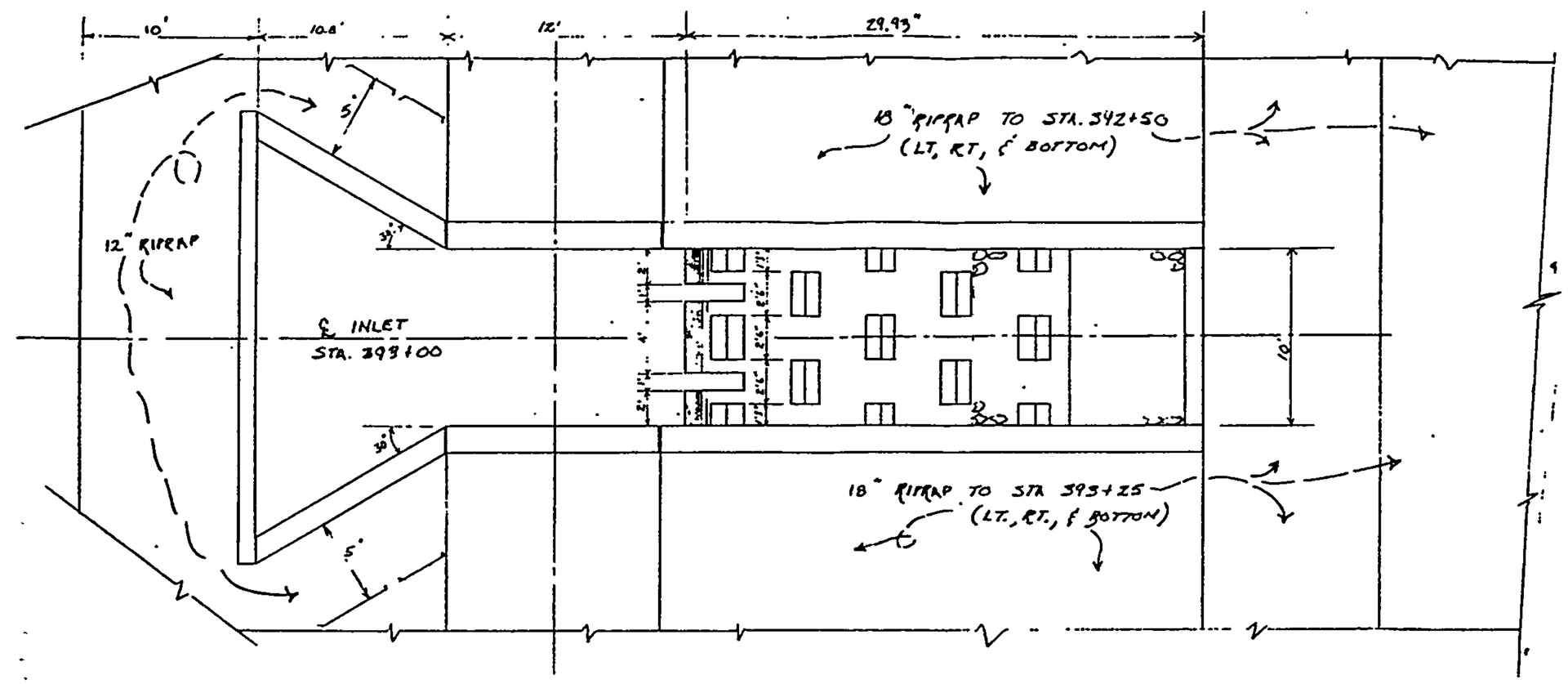

PLAN

SCALE: 1" = 5'

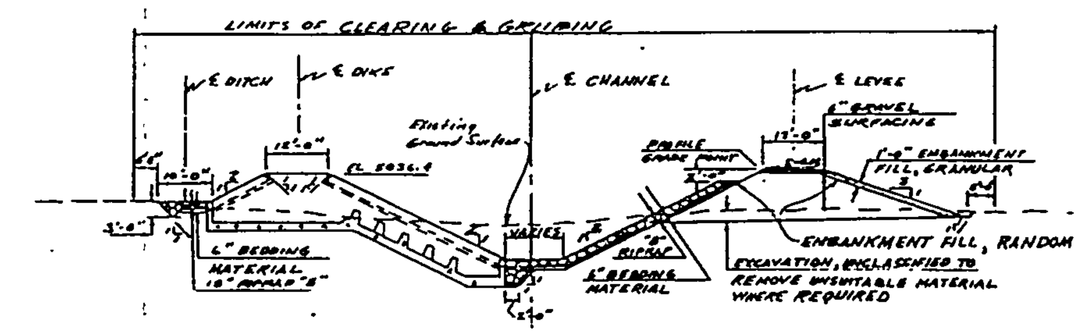

SECTION

STA. 393+00

SCALE: 1" = 20'

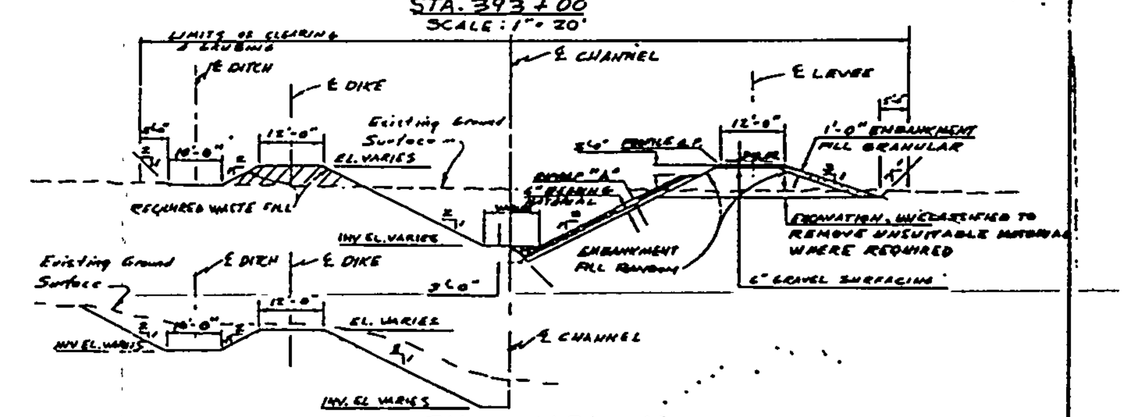

CHANNEL

TYPICAL SECTIONS

SCALE: 1" = 20'

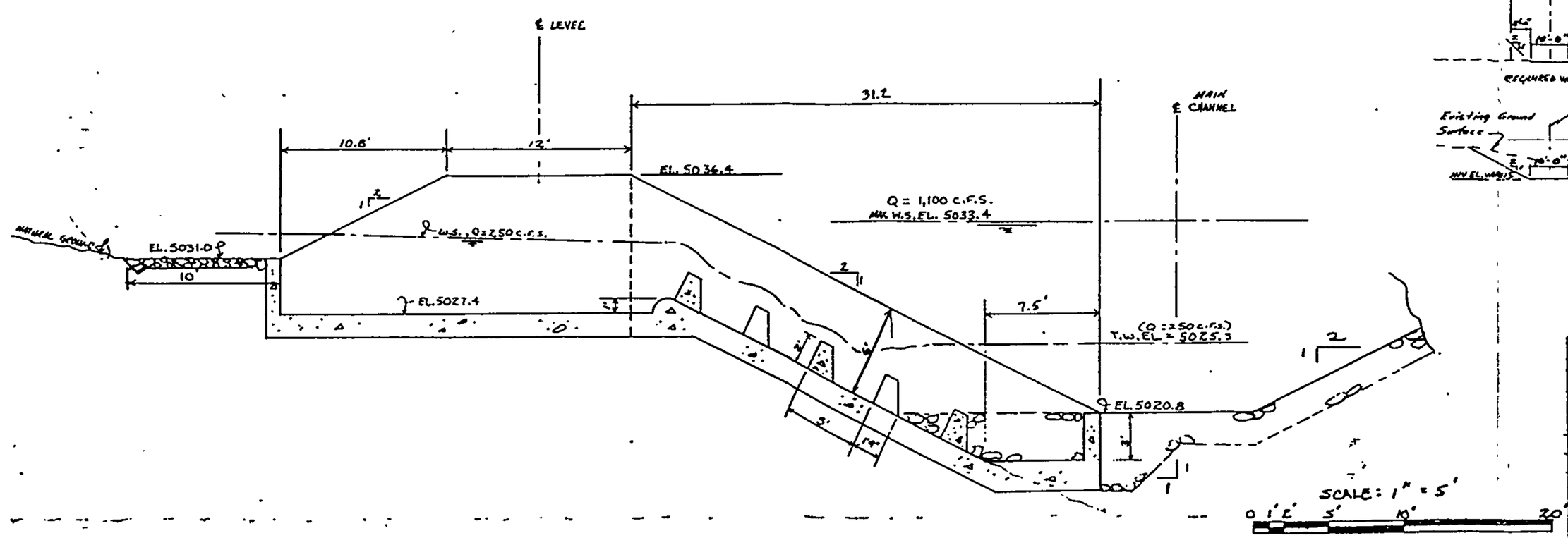

PROFILE

SCALE: 1" = 5'

BAFFLE CHUTE INLET, STATION 393+00

SCALE: 1" = 5'

U.S. ARMY ENGINEER DISTRICT, ALBUQUERQUE CORPS OF ENGINEERS ALBUQUERQUE, NEW MEXICO	
DESIGNED BY:	RIO GRANDE WATERSHED — RIO GRANDE, NEW MEXICO ALBUQUERQUE DIVERSION CHANNELS ALBUQUERQUE, NEW MEXICO SOUTH DIVERSION CHANNEL
DRAWN BY:	INLET STRUCTURE STA 393+00 SECTIONS
CHECKED BY:	
SUBMITTED BY:	FILE NUMBER
PROJECT ENGINEER DATE:	RGR-AL-F-S-2

APPENDIX A

CALCULATIONS: HYDROLOGIC ANALYSIS

HYDROLOGIC ANALYSIS — EXISTING CONDITION

PRECIP. ZONE (PG A-1) → ZONE 2

PRINCIPAL DESIGN STORM → 100-YEAR, 6-HOUR EVENT

AMC II CONDITION (NORMALLY DRY WATERSHED)

DEPTH (in) @ 100-YEAR STORM

ZONE 2

$P_{60} = 2.01$

$P_{360} = 2.35$

$P_{1440} = 2.75$

$P_{4DAY} = 3.30$

$P_{10DAY} = 3.95$

EXISTING LAND TREATMENT → 10% A, 90% C

EXISTING AREA = 910,42387 sf = 20.9006 AC

PEAK DISCHARGE (TABLE A-9)

ZONE 2, A → 1.56 cfs/AC

ZONE 2, C → 3.14 cfs/AC

TOTAL $Q_P = Q_{pA} A_A + Q_{pC} A_C = 1.56(.10 \times 20.9006) + 3.14(.90 \times 20.9006) =$

$= 3.260 \text{ cfs} + 59.065 \text{ cfs} =$

$= 62.326 \text{ cfs}$

ULTIMATE DEVELOPED

25% C, 75% D

Zone 2, C → 3.14 cfs/AC

Zone 2, D → 4.70 cfs/AC

$Q_P = 90.082 \text{ cfs}$

BOHANNAN-HUSTON INC.

PROJECT NAME UNM TECH PARK SHEET ____ OF ____

PROJECT NO. T95281 C2201 BY ARB DATE 6-17-96

SUBJECT ____ CH'D ____ DATE ____

Social Security Site

"Pond was designed to discharge runoff into arroyo at undeveloped flow rates that existed prior to the developement of that project."

Site: APPROX 10.911 ac

Zone 2

Treatment: 100% B

Peak Discharge: 2.28 cfs/ac (100 yr)

Social Security Drainage for 100 yr event $Q_p = 24.88$ cfs

PEAK DISCHARGE: 0.95 cfs/ac (10 yr)

$Q_{p(10)} = 10.37$ cfs

BOHANNAN-HUSTON INC.

PROJECT NAME UNM TECH PARK SHEET _____ OF _____

PROJECT NO. T95281C2201 BY ARB DATE 6-26-96

SUBJECT _____ CH'D _____ DATE _____

ALIGNMENT 1:

0+00		LOW POINT
5+53.83	5041.11	℄ GODDARD RD
6+28.81	5041.68	HIGH POINT
9+24.53	5038.24	LOW POINT
20+54.44	5076.93	TIE TO EXIST

ALIGNMENT 2:

0+00	5041.11	℄ RESEARCH PARK RD
0+42.24	5040.81	LOW POINT
11+75.68	5111.64	HIGH POINT

ASSUME:

ALIGNMENT 1	4' SDWK	2'	13' LANE	13' LANE	2'	4' SDWK	
ALIGNMENT 2	4' SDWK	2'	12' LANE	12' LANE	2'	4' SDWK	

BOHANNAN-HUSTON INC.

PROJECT NAME UNM TECH PARK SHEET ____ OF ____

PROJECT NO. T 95 281 C2201 BY ARB DATE 6-17-96

SUBJECT ____ CH'D ____ DATE ____

ROADWAY
DRAINAGE W/ NO OTHER CONTRIBUTION

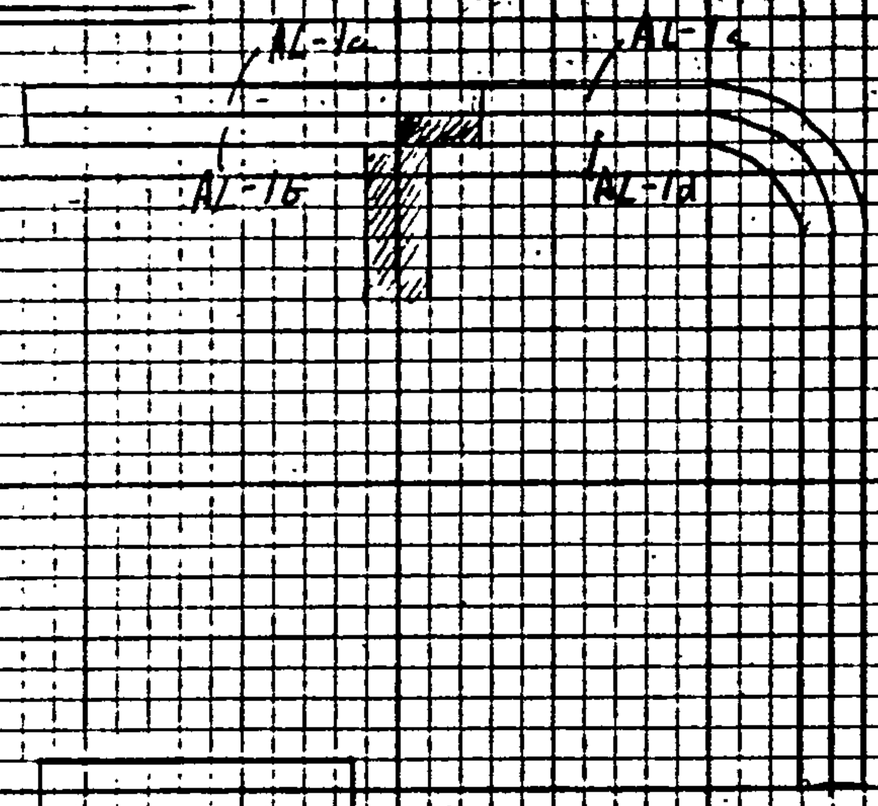

AREA

AL-1a = .274 ac
AL-1b = .242 ac
AL-1c = .622 ac
AL-1d = .622 ac

ZONE 2, TREATMENT D

Peak DISCHARGE

AL-1a : $Q_p = 4.70 * .274 =$ 1.288 cfs
AL-1b : $Q_p = 4.70 * .242 =$ 1.137 cfs
AL-1c : $Q_p = 4.70 * .622 =$ 2.923 cfs
AL-1d : $Q_p = 4.70 * .622 =$ 2.923 cfs

AREA:

AL-2a = .486 ac
AL-2b = .519 ac

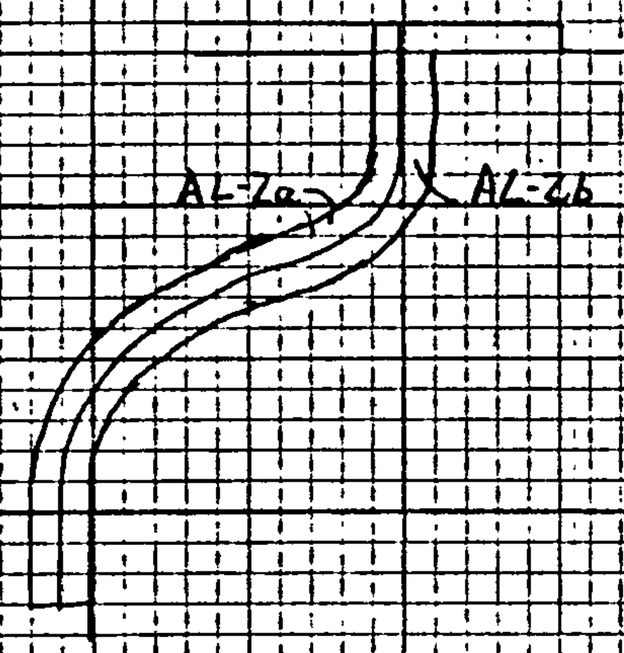

ZONE 2, TREATMENT D

Peak Discharge

AL-2a : $Q_p = 4.70 * .486 =$ 2.284 cfs
AL-2b : $Q_p = 4.70 * .519 =$ 2.439 cfs

BOHANNAN-HUSTON INC.

PROJECT NAME UNM TECH PARK SHEET ____ OF ____
PROJECT NO. T 95281 C 2201 BY ARB DATE 6-17-96
SUBJECT ____ CH'D ____ DATE ____

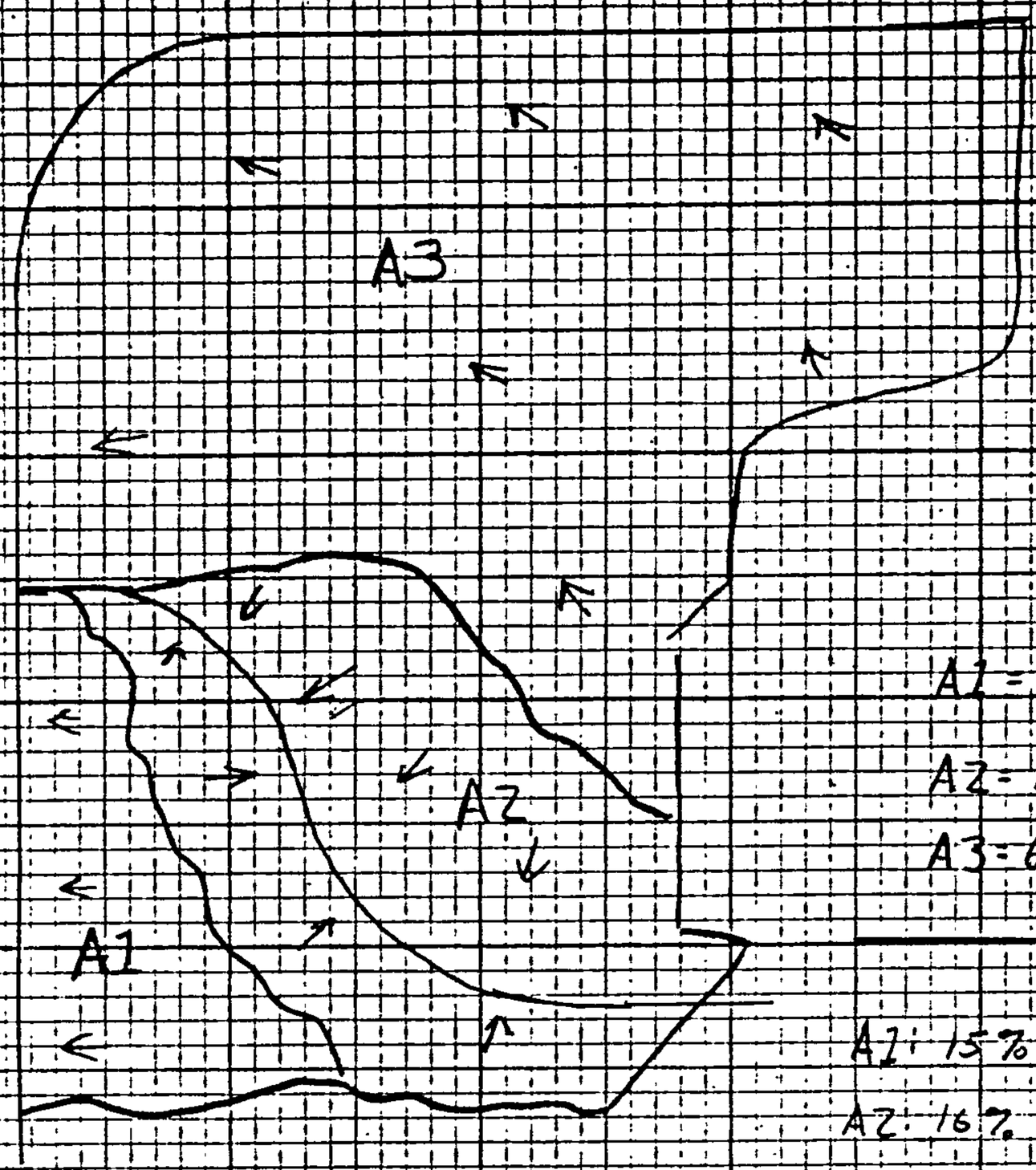

A1 = 138,875 sf = 3.1881 ac

A2 = 167,653 sf = 3.8488 ac

A3 = 601,729 sf = 13.8138 ac

A1: 15% D, 85% C

A2: 16% D, 84% C

A3: 9% D, 91% C

A1: $Q_p = 4.7(3.1881 * .15) + 3.14(3.1881 * .85)$

$= 10.757$ cfs

A2: $Q_p = 4.7(3.8488 * .16) + 3.14(3.8488 * .84)$

$= 13.046$ cfs

A3: $Q_p = 4.7(13.8138 * .09) + 3.14(13.8138 * .91)$

$= 45.315$ cfs

DRAINAGE WITH NO DEVELOPEMENT & ROADWAY

BOHANNAN-HUSTON INC.

PROJECT NAME UNM TECH PARK SHEET _____ OF _____

PROJECT NO. T95 281 C 2201 BY AZB DATE 6-17-96

SUBJECT _____ CH'D _____ DATE _____

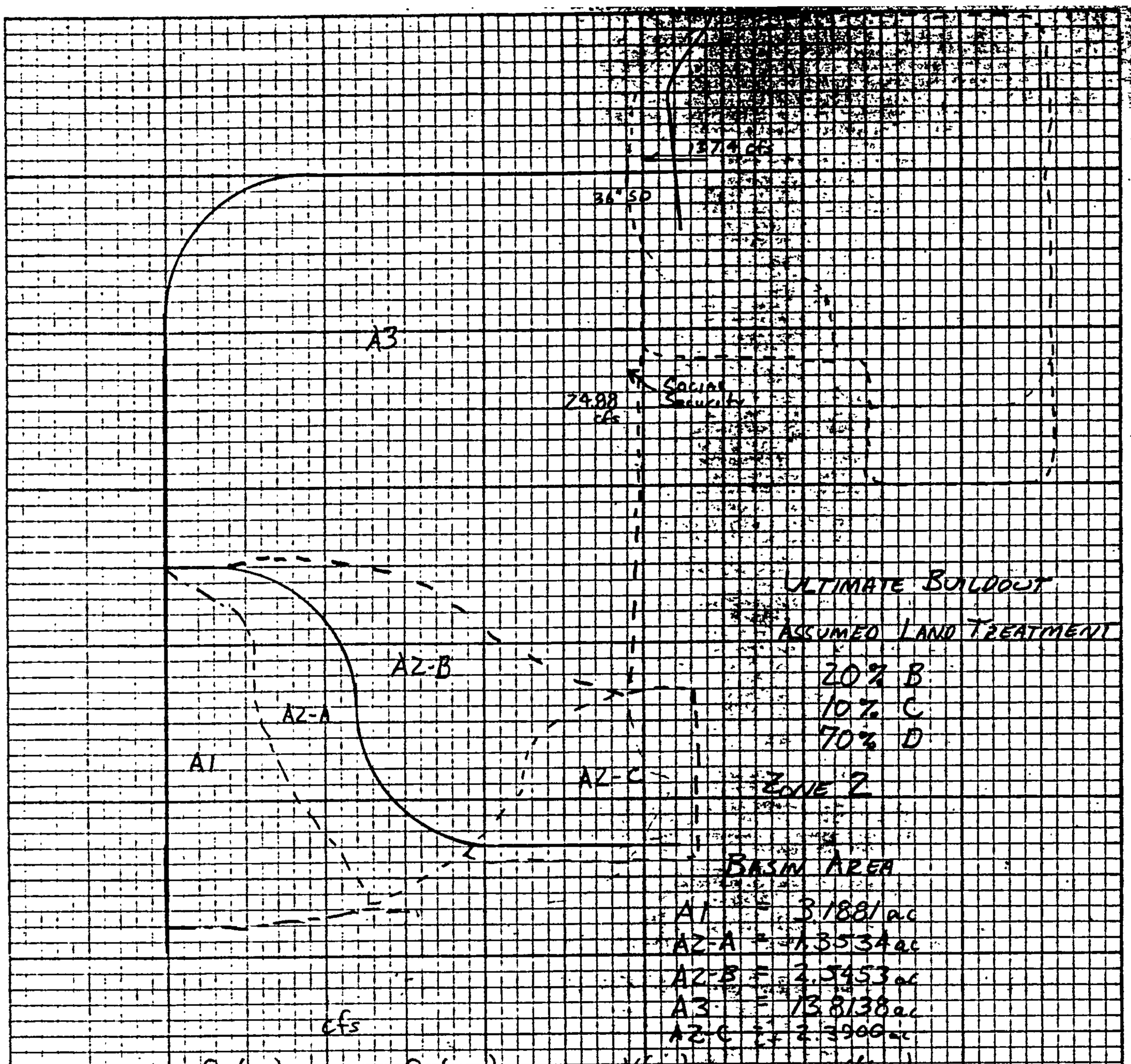

	$Q_p(10)$ cfs	$Q_p(100)$	$V(10)$ ft³	$V(100)$
A1	8.158	12.943	12105	20287
A2-A	3.463	5.495	5139	8612
A2-B	6.513	10.334	9665	16197
A3	35.350	56.084	52451	87903
Total	53.485	84.856	79359	132.999
A2-C	6.116	9.703	9075	148.207

ANALYSIS AT ASSUMED ULTIMATE BUILDOUT

BOHANNAN-HUSTON INC.

PROJECT NAME UNM TECH PARK SHEET ____ OF ____

PROJECT NO. T95 281 C 2201 BY ARB DATE 6-26-96

SUBJECT ____ CH'D ____ DATE ____

APPENDIX B

CALCULATIONS: INLET & CULVERT PIPE CAPACITY ANALYSIS

SCIENCE & TECHNOLOGY PARK AT
THE UNIVERSITY OF NEW MEXICO

INLET INTERCEPTION RATES & STREET FLOW DEPTHS

4/9/97

ROAD	METHOD	STATION	OFFSET	DIR	Sx	Sl	PLATE 22.3 D-1 d	V	d x V	PLATE 22.3 D-5 Qi
	TRUNK LINE "A"									
LANGHAM	DPM	11+00.00	33.00	RT	2.00	1.25	0.22	2.2	0.5	1.4
LANGHAM	DPM	11+26.00	33.00	RT	2.00	1.25	0.32	2.4	0.8	2.4
LANGHAM	DPM	11+05.00	31.00	LT	2.00	1.25	0.22	2.2	0.5	1.4
LANGHAM	DPM	11+31.00	31.00	LT	2.00	1.25	0.32	2.4	0.8	2.4
	TRUNK LINE "B"									
GODDARD	DPM	50+60.00	16.00	RT	2.00	0.84	0.38	3.5	1.3	3.8
GODDARD	DPM	50+85.00	16.00	RT	2.00	1.89	0.42	3.8	1.6	4.3
GODDARD	DPM	50+60.00	24.00	LT	2.00	0.84	0.38	3.5	1.3	3.8
GODDARD	DPM	50+85.00	24.00	LT	2.00	1.89	0.42	3.8	1.6	4.3
	TRUNK LINE "C"									
LANGHAM	HEC-12	19+23.00	19.00	RT	2.00	0.24	0.55 *	0	0.0	7.1
LANGHAM	HEC-12	19+48.00	19.00	RT	2.00	0.07	0.56 *	0	0.0	17.1
LANGHAM	HEC-12	19+23.00	19.00	LT	2.00	0.24	0.55 *	0	0.0	7.1
LANGHAM	HEC-12	19+48.00	19.00	LT	2.00	0.07	0.30 *	0	0.0	7.1

* NOTE:-VELOCITIES OF FLOWS IN STREETS ARE APPROXIMATELY 0,
INLETS ARE IN A SUMP CONDITION.

LANGHAM	DPM	21+50.00	19.00	RT	2.00	2.25	0.42	5.0	2.2	8.0
LANGHAM	DPM	26+50.00	19.00	RT	2.00	4.00	0.40	5.0	2.0	7.0

SCIENCE & TECHNOLOGY PARK AT
THE UNIVERSITY OF NEW MEXICO

SINGLE "A" COA CATCH BASIN IN SUMP CONDITION
SLOT & GRATE COMBINED CAPACITIES
USING FHWA HEC-12 NOMOGRAPHS
LOCATION-TRUNKLINE "C"

1/22/97

DEPTHS & FLOWS SHOWN ARE FOR
100 YR X 2 FOR CLOGGING.

WATER DEPTH OVER THE GRATE d ft	HEC-12 CHART 12 Qslot cfs	HEC-12 CHART 11 Qgrate cfs	Qslot + Qgrate= Qtotal cfs	LOCATION	ACTUAL FLOWRATE cfs
0.2	2.1	1.6	3.7		
0.3	4.1	3.2	7.3		
0.4	6.2	4.9	11.1		
0.5	8.5	6.9	15.4	<------LT	14.2
0.6	10.7	9.0	19.7		
0.7	13.0	12.0	25.0	<------RT	24.3

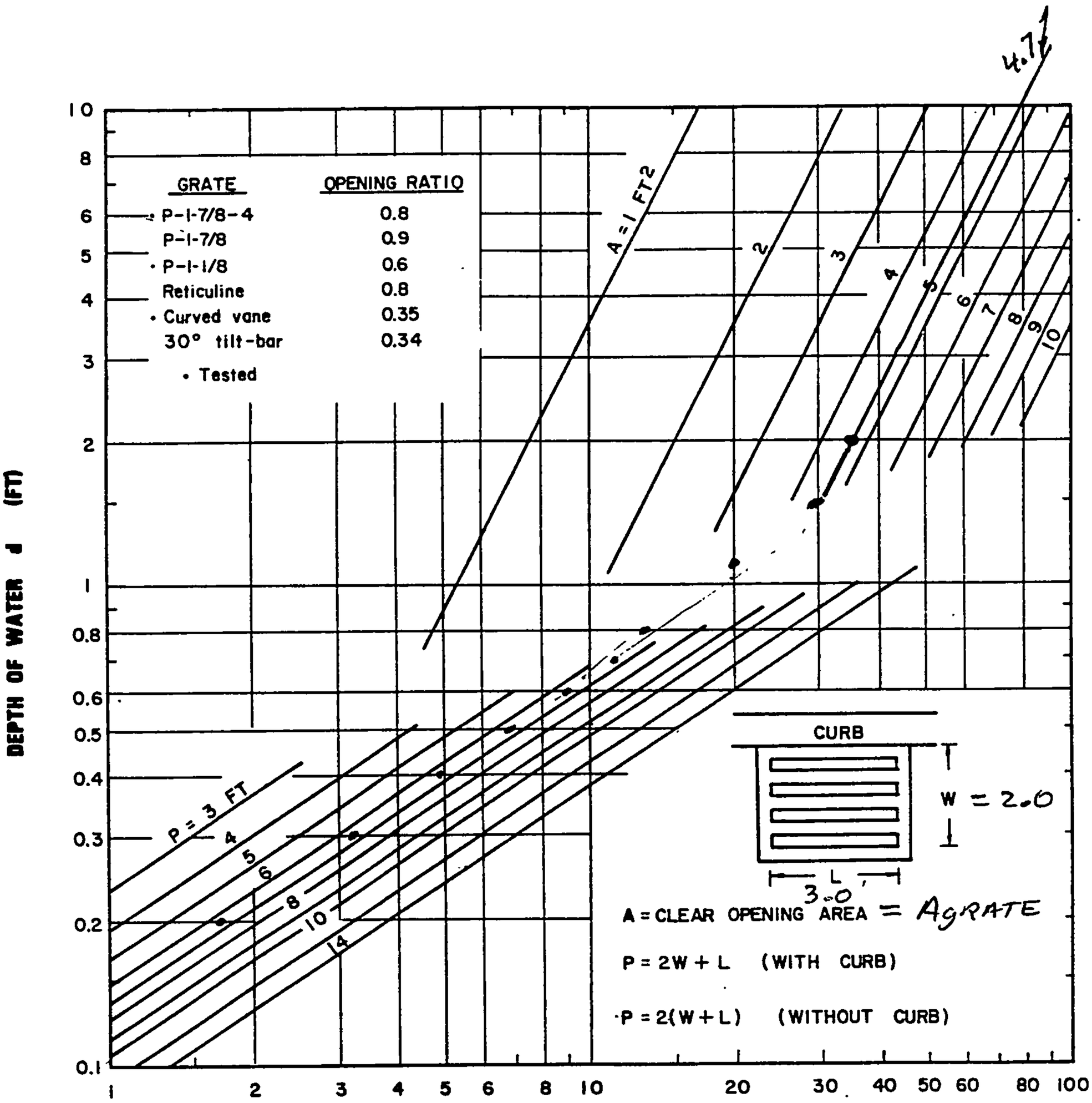

CHART 11. Grate inlet capacity in sump conditions.

$A_{grate} = \overset{\text{ROW}}{8} \times \overset{\text{COLUMNS}}{12} \times 0.1306' \times 0.375' = 4.7\ FT^2$

$P = 2(2.0) + 3 = 7.0$

FHWA
HEC-12

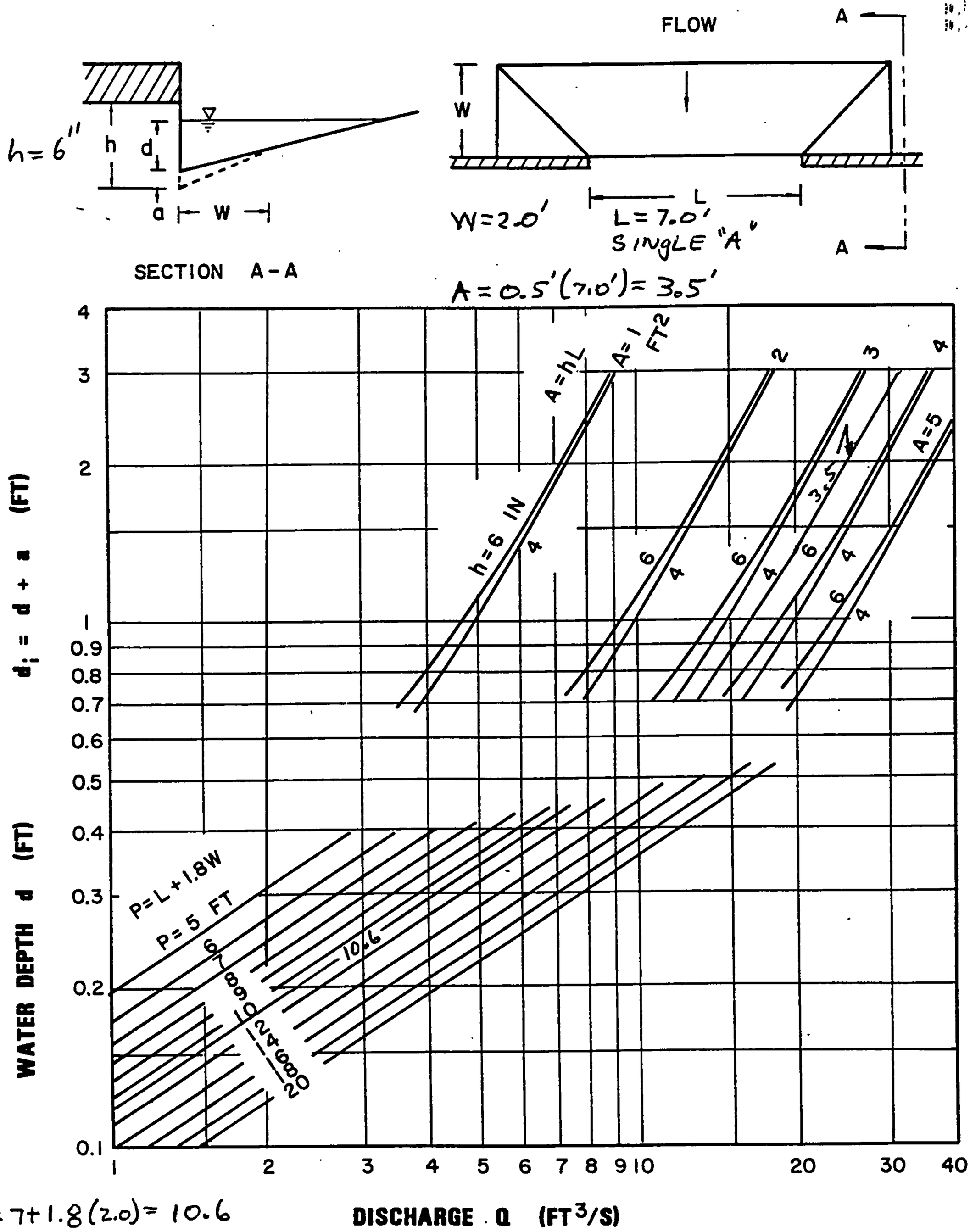

P=7+1.8(2.0)=10.6

CHART 12. Depressed curb-opening inlet capacity in sump locations.

HEC-12
FHWA

SCIENCE & TECHNOLOGY PARK AT
UNIVERSITY OF NEW MEXICO

CATCH BASIN -V DEPTHS
4/10/97

STATION	OFFSET	MAINLINE HGL	TC	PIPE INVERT	ELEV @ CURB FACE MINUS 6"	CATCH BASIN HEAD "H"	PIPE Q cfs	PIPE SIZE in	PIPE VEL fps	G DEPTH	H1 DEPTH	REQ'D MINIMUM V DEPTH ft		ACTUAL V DEPTH ft	COMMENTS
11+26.00	33.00' RT	5032.94	5036.39	5029.40	5035.06	2.12	2.4	18	1.36	N/A	N/A	2.86	<	6.99	1ST OK
11+00.00	33.00' RT		5036.07	5029.00	5034.74	1.80	3.8	24	1.21	0.32	0.32	3.36	<	7.07	2ND OK
11+31.00	31.00' LT	5032.90	5036.17	5028.48	5034.84	1.94	2.4	18	1.36	N/A	N/A	2.86	<	7.69	1ST OK
11+05.00	31.00' LT		5036.49	5028.19	5035.16	2.26	3.8	24	1.21	-0.32	-0.32	3.36	<	8.3	2ND OK
50+80.00	24.00' LT	5033.99	5042.39	5035.96	5041.06	7.07	4.3	18	2.43	N/A	N/A	2.94	<	6.43	1ST OK
50+60.00 (GODDARD STATIONS)	24.00' LT		5042.00	5035.16	5040.67	6.68	8.1	24	2.58	0.39	0.39	3.45	<	6.84	2ND OK
50+80.00	16.00' RT	5033.99	5042.55	5036.20	5041.22	7.23	4.3	18	2.43	N/A	N/A	2.94	<	6.35	1ST OK
50+60.00	16.00' RT		5042.16	5028.35	5040.83	6.84	8.1	24	2.58	0.39	0.39	3.45	<	13.81	2ND OK
19+48.00	19.00' RT	5036.82	5038.86	5031.65	5037.53	0.71	7.1	18	4.02	N/A	N/A	3.13	<	7.21	1ST OK
19+23.00	19.00' RT		5038.83	5031.04	5037.50	0.68	14.2	24	4.52	0.03	0.03	3.71	<	7.79	2ND OK
19+48.00	19.00' LT	5035.63	5038.86	5031.42	5037.53	1.90	24.1	24	7.67	N/A	N/A	4.43	<	7.44	1ST OK
19+23.00	19.00' RT		5038.83	5030.72	5037.50	1.87	17.1	18	9.68	0.03	0.03	4.57	<	8.11	2ND OK
21+50.00	19.00' RT	5039.21	5041.83	5035.85	5040.50	1.29	8	18	4.53	N/A	N/A	3.21	<	5.98	1ST OK
26+50.00	19.00' RT	5055.89	5061.20	5053.20	5059.87	3.98	7	18	3.96	N/A	N/A	3.12	<	8	1ST OK

Science & Technology Park at the University of New Mexico-Trunkline "A"

***** HYDRAULIC GRADE LINE CALCULATIONS *****

Manning's n = 0.013
for pipe

Station	Structure	Diam. (in.)	Q (cfs)	Area	Vel.	K	Sf	Length (ft.)	MH Dia. (ft.)	JNCT Angle	Hf	Hb	Hj	Hmh	Ht	Total Losses	HGL(dn)	HGL(up)	Low Point	HV	EGL(dn)	EGL(up)
11+00.00	OUTFALL								0.0	0.0		0.00	0.00	0.00	0.00	0.00		5032.72	5036.21	0.09	5032.81	5032.81
		24	7.6	3.14	2.42	226	0.0011	83.00			0.09					0.09						
11+00.00	MH#1-JUNCT								6.0	0.0		0.00	0.00	0.00	0.00	0.00	5032.81	5032.88	5036.21	0.02	5032.90	5032.90
		24	3.8	3.14	1.21	226	0.0003	69.00			0.02					0.02						
11+00.00	INLET								0.0	90.0		0.01	0.02	0.00	0.00	0.02	5032.90	5032.92	5036.01	0.03	5032.92	5032.95
		18	2.4	1.77	1.36	105	0.0005	95.04			0.05					0.05						

JUNCTION

Dia. 3 (in.)	Dia. 3 Angle	Hj	Ht(inc.)	Ht(dec.)
0	0	0.0000	0.0091	0.0000
0	0	0.0000	0.0000	0.0000
24	45	0.0113	0.0000	0.0001

Science & Technology Park at the University of New Mexico-Trunkline "B"

***** HYDRAULIC GRADE LINE CALCULATIONS *****

Manning's n = 0.013
for pipe

Station	Structure	Diam. (in.)	Q (cfs)	Area	Vel.	K	Sf	Length (ft.)	MH Dia. (ft.)	JNCT Angle	Hf	Hb	Hj	Hmh	Ht	Total Losses	HGL(dn)	HGL(up)	Low Point	HV	EGL(dn)	EGL(up)
48+95.00	OUTFALL								0.0	0.0		0.00	0.00	0.00	0.00	0.00		5032.72	5040.00	0.41	5033.13	5033.13
		24	16.1	3.14	5.12	226	0.0051	150.00			0.76					0.76						
50+47.00	MH#2-JUNCT								4.0	45.0		0.03	0.17	0.00	0.00	0.21	5033.48	5033.99	5041.61	0.10	5033.89	5034.10
		24	8.1	3.14	2.58	226	0.0013	25.00			0.03					0.03						
50+60.00	INLET								0.0	0.0		0.00	0.06	0.00	0.00	0.06	5034.02	5034.16	5037.93	0.03	5034.13	5034.19
		18	2.4	1.77	1.36	105	0.0005	95.04			0.05					0.05						

JUNCTION

Dia. 3 (in.)	Dia. 3 Angle	Hj	Ht(inc.)	Ht(dec.)
0	0	0.0000	0.0408	0.0000
24	45	0.4795	0.0000	0.0000
24	45	0.1305	0.0000	0.0046

Science & Technology Park at the University of New Mexico-Trunkline "C"

***** HYDRAULIC GRADE LINE CALCULATIONS *****

Manning's n = 0.013
for pipe

Station	Structure	Diam. (in.)	Q (cfs)	Area	Vel.	K	Sf	Length (ft.)	MH Dia. (ft.)	JNCT Angle	Hf	Hb	Hj	Hmh	Ht	Total Losses	HGL(dn)	HGL(up)	Low Point	HV	EGL(dn)	EGL(up)
18+74.00	OUTFALL								0.0	0.0		0.00	0.00	0.00	0.00	0.00		5033.87	5037.93	2.94	5036.81	5036.81
		54	218.7	15.90	13.75	1966	0.0124	8.96			0.11					0.11						
18+74.00	BEND								0.0	45.0		0.42	0.00	0.15	0.00	0.56	5033.98	5034.54	5037.93	2.94	5036.92	5037.48
		54	218.7	15.90	13.75	1966	0.0124	35.19			0.44					0.44						
18+94.24	JUNCT-WYE								0.0	0.0		0.00	0.28	0.00	0.00	0.28	5034.98	5035.63	5037.93	2.57	5037.91	5038.19
		54	204.5	15.90	12.86	1966	0.0108	28.67			0.31					0.31						
19+20.00	JUNCT-WYE								0.0	0.0		0.00	0.31	0.00	0.00	0.31	5035.94	5036.82	5037.93	2.00	5038.50	5038.82
		54	180.4	15.90	11.34	1966	0.0084	5.28			0.04					0.04						
19+36.00	MH#3-BEND								6.0	45.0		0.36	0.00	0.00	0.03	0.39	5036.87	5036.05	5038.41	3.20	5038.86	5039.25
		48	180.4	12.57	14.36	1436	0.0158	199.85			3.15					3.15						
21+50.00	MH#4-JUNCT								6.0	0.0		0.00	1.79	0.00	0.04	1.83	5039.21	5039.25	5040.93	4.99	5042.41	5044.23
		42	172.4	9.62	17.92	1006	0.0294	210.38			6.18					6.18						
23+74.95	MH#5-THRU								6.0	0.0		0.00	0.00	0.25	0.00	0.25	5045.42	5045.67	5049.76	4.99	5050.41	5050.66
		42	172.4	9.62	17.92	1006	0.0294	172.05			5.05					5.05						
25+50.00	JUNCT-WYE								0.0	0.0		0.00	0.92	0.00	0.00	0.92	5050.72	5053.13	5057.00	3.50	5055.71	5056.63
		42	144.4	9.62	15.01	1006	0.0206	96.00			1.98					1.98						
26+50.00	MH#6								6.0	0.0		0.00	0.45	0.00	0.00	0.45	5055.11	5055.89	5060.30	3.17	5058.61	5059.05
		42	137.4	9.62	14.28	1006	0.0187	147.00			2.74					2.74						
28+00.00	TAPER								4.0	0.0		0.00	0.00	0.00	0.08	0.08	5058.63	5056.01	5067.00	5.87	5061.80	5061.88

JUNCTION

Dia. 3 (in.)	Dia. 3 Angle	Hj	Ht(inc.)	Ht(dec.)
0	0	0.0000	0.2936	0.0000
0	0	0.0000	0.0000	0.0000
24	45	0.6492	0.0000	0.0000
24	45	0.8836	0.0000	0.0000
0	0	0.0000	0.0000	0.0282
18	90	-1.2627	0.0000	0.0394
0	0	0.0000	0.0000	0.0000
24	45	2.4064	0.0000	0.0000
18	90	0.7796	0.0000	0.0000
0	0	0.0000	0.0000	0.0826

APPENDIX C

EXCERPTS FROM STADIUM BOULEVARD STORM DRAINAGE IMPROVEMENT ENGINEERING ANALYSIS REPORT

Stadium Boulevard
Storm Drainage Improvement
Engineering Analysis Report

October 1994

STADIUM BOULEVARD STORM DRAINAGE IMPROVEMENT ENGINEERING ANALYSIS REPORT

Prepared for:

City of Albuquerque
Public Works Department
Hydrology Division
P.O. Box 1293
Albuquerque, NM 87103

Prepared by:

BOHANNAN-HUSTON INC.
ENGINEERS ARCHITECTS PHOTOGRAMMETRISTS SURVEYORS
COURTYARD I, 7500 JEFFERSON NE ALBUQUERQUE, NM 87109 TEL (505) 823-1000 FAX (505) 821-0892

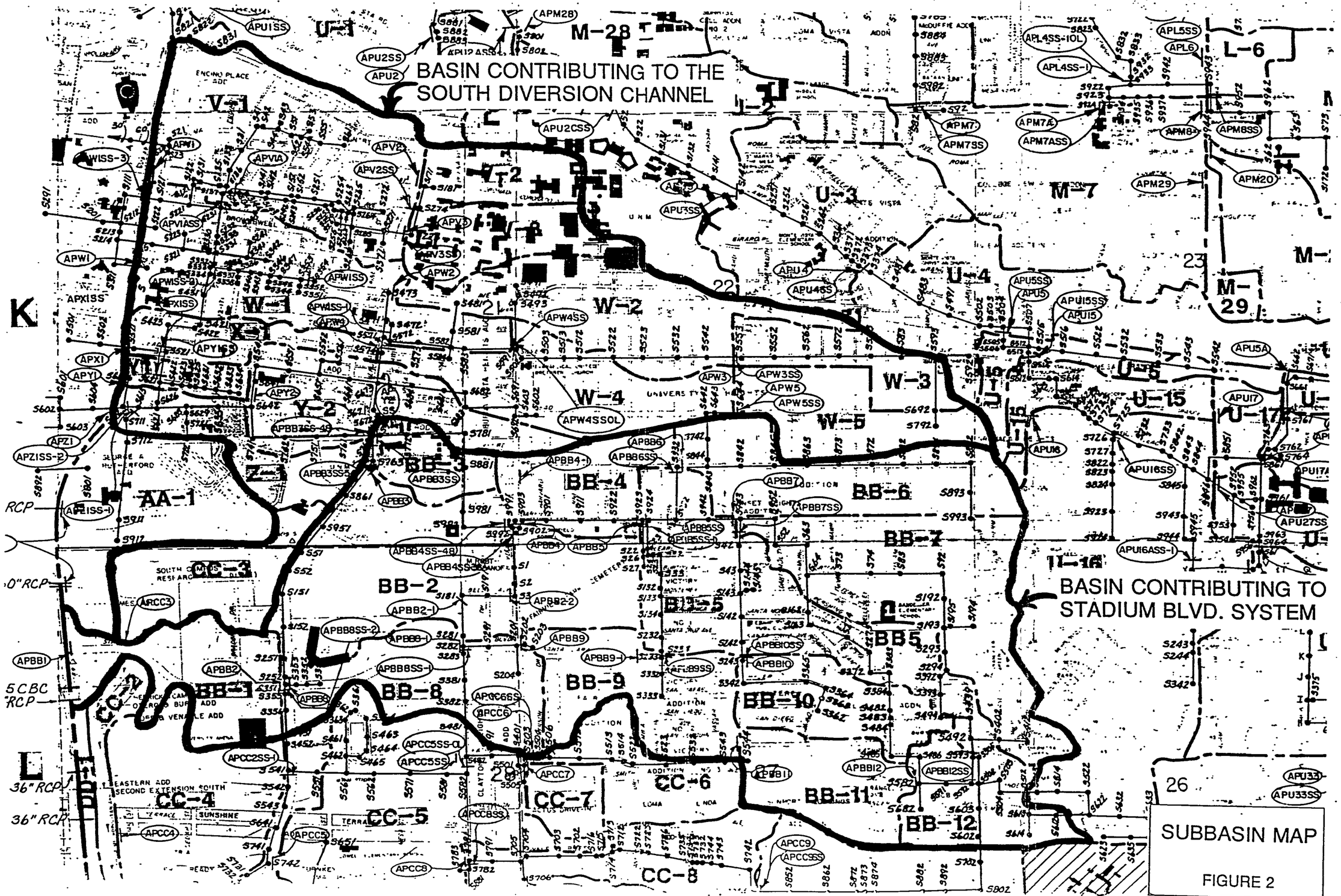
BASIN CONTRIBUTING TO THE SOUTH DIVERSION CHANNEL
BASIN CONTRIBUTING TO STADIUM BLVD. SYSTEM
M-28
M-7
M-29
L-6
L-2
U-3
U-4
U-5
U-15
U-17
W-1
W-2
W-3
W-4
W-5
V-1
V-2
T-2
AA-1
BB-1
BB-2
BB-3
BB-4
BB-5
BB-6
BB-7
BB-8
BB-9
BB-10
BB-11
BB-12
CC-2
CC-3
CC-4
CC-5
CC-6
CC-7
CC-8
DD-1
RCP
36" RCP
SUBBASIN MAP
FIGURE 2

TABLE 2

DEVELOPED CONDITIONS SUBBASIN HYDROLOGY

SUBBASIN ID No.	Area (Sq. Mi.)	Time to Peak (Hrs.)	Peak Discharges (cfs) 10-year	100-year
BB-1	0.0932	0.133	124	213
BB-2*	0.2187	0.354	139	261
BB-2A**	0.1629	0.307	132	230
BB-2B**	0.0558	0.146	48	96
BB-3	0.0325	0.139	36	66
BB-4	0.0576	0.227	47	87
BB-5	0.1796	0.202	154	294
BB-6	0.1112	0.196	99	185
BB-7	0.1654	0.236	128	244
BB-8	0.1009	0.196	126	208
BB-9	0.1103	0.165	110	204
BB-10	0.0696	0.133	77	142
BB-11	0.0784	0.140	86	157
BB-12	0.0740	0.285	52	96
CC-3	0.0835	0.324	53	99
V-1	0.1960	0.148	205	388
V-2	0.0527	0.164	53	97
V-3	0.0576	0.249	44	82
W-1	0.1726	0.191	155	294
W-2	0.1301	0.206	111	209
W-3	0.0552	0.144	60	109
W-4	0.1105	0.280	78	145
W-5	0.0831	0.140	91	167
X-1	0.0319	0.136	36	65
Y-1	0.0198	0.133	22	41
Y-2	0.0999	0.202	9	16
Z-1	0.0654	0.164	66	121

*Without Yale Project in-place
**With Yale Project in-place

Boulevard in order to capture flow from a planned City of Albuquerque storm drain.

Design Memorandum No. 6 and its Supplement show that the design discharge for the South Diversion Channel from its beginning at Sta. 396+30 to Sta. 367+83 (approximately 1,500 feet downstream of Stadium Boulevard) is 1,100 cfs. A side drainage inlet allows in another 100 cfs at this point. At Geneiva's Arroyo the design flow increases to 2,500 cfs then to 2,900 cfs at Gibson Boulevard (Sta. 343+93.5).

The hydrologic analysis performed for the Stadium Boulevard storm drain study determined that the overland flow into the South Diversion Channel from Stadium Boulevard for the 100-year storm event under present (September 1993) conditions is approximately 880 cfs. With the Stadium Boulevard project in place, the 100-year storm flow into the SDC will increase to 1,270 cfs.

Table 3 compares the flows in the Corps' SDC report to the flows determined from this study. The design storm used by the COE for the SDC was for the standard project flood, which appears from this analysis, to be comparable to the 100-year developed conditions storm.

TABLE 3

SOUTH DIVERSION CHANNEL FLOOD FLOW COMPARISON

Location Along South Diversion Channel	COE[1] 1970 Flow cfs	BHI Existing System cfs	BHI Proposed System Flow cfs
Upstream End to Stadium Boulevard Sta. 396+55 to Sta. 385+00	1100	730 [2]	730 [2]
Downstream of Stadium Boulevard Sta. 380+00	1100	1450 [2]	2100 [2]
Side Inlet - Sta. 360+00[3]	1200	1550 [4]	2200 [4]

Location Along South Diversion Channel	COE[1] 1970 Flow cfs	BHI Existing System cfs	BHI Proposed System Flow cfs
Confluence with Geneiva's Arroyo Sta. 345+50	2500	2500 [6]	2820 [5]
Gibson Boulevard - Sta. 343+93.5	2900	2900 [6]	2900 [6]

[1] Standard project flood flow.
[2] 100-year storm flow.
[3] The South Diversion Channel as-built drawings show the side inlet channel is located at Sta. 360+00 and not Sta. 367+83.
[4] Additional inflows were assumed from COE Design Memorandum but not analyzed in this study.
[5] Flow in Geneiva's Arroyo was from the "Geneiva's Arroyo Improvements, June 1990" by Boyle Engineering Corporation. The peak flow was directly added since area was outside of this project's hydrologic model.
[6] The standard project flood was used since this area is outside of this project's hydrologic model.

From Table 3, it can be seen that the SDC is presently under-capacity for the 100-year flood in the reach from Stadium Boulevard to Geneiva's Arroyo. The situation will worsen with the proposed construction of the Stadium Boulevard storm drain project unless further steps are taken to mitigate the impacts of the project.

V. DRAINAGE IN THE VICINITY OF THE UNIVERSITY FOOTBALL STADIUM

A hydrologic analysis of the effects that the Stadium Boulevard project would have on drainage conditions within UNM's football stadium parking lot and surrounding area was performed.

A. Existing Problems

Presently, a drainage problem exists on the property of UNM in the parking lot immediately southeast of the stadium. This flooding problem also impacts the intersection of Ash Street and Sunshine Terrace Avenue.

APPENDIX D

HEC-2 ANALYSIS SOUTH DIVERSION CHANNEL

10'X12' Box

THIS RUN EXECUTED 17DEC96 14:11:32

****
HEC-2 WATER SURFACE PROFILES

Version 4.6.2; May 1991
****

NOTE- ASTERISK (*) AT LEFT OF CROSS-SECTION NUMBER INDICATES MESSAGE IN SUMMARY OF ERRORS LIST

SUBCRITICAL RUN - W/

SUMMARY PRINTOUT

	SECNO	10*KS	XLCH	DEPTH	ELMIN	Q	VCH	CWSEL	RBEL	K*XNCH	TOPWID
	33000.000	16.92	0.00	11.01	5014.62	3050.00	7.48	5025.63	5028.30	28.00	59.04
	33000.000	16.92	0.00	11.01	5014.62	3050.00	7.48	5025.63	5028.30	28.00	59.04
	33000.000	16.71	0.00	13.27	5014.62	4550.00	8.25	5027.89	5028.30	28.00	68.09
	33200.000	16.89	200.00	11.02	5014.95	3050.00	7.48	5025.97	5028.63	28.00	59.06
	33200.000	16.89	200.00	11.02	5014.95	3050.00	7.48	5025.97	5028.63	28.00	59.06
	33200.000	16.71	200.00	13.27	5014.95	4550.00	8.25	5028.23	5028.63	28.00	68.09
	33400.000	16.86	200.00	11.02	5015.29	3050.00	7.47	5026.31	5028.97	28.00	59.08
	33400.000	16.86	200.00	11.02	5015.29	3050.00	7.47	5026.31	5028.97	28.00	59.08
	33400.000	16.71	200.00	13.27	5015.29	4550.00	8.25	5028.56	5028.97	28.00	68.09
	33600.000	14.68	200.00	11.12	5015.62	2900.00	7.01	5026.74	5029.30	28.00	59.47
	33600.000	14.68	200.00	11.12	5015.62	2900.00	7.01	5026.74	5029.30	28.00	59.47
	33600.000	15.20	200.00	13.36	5015.62	4400.00	7.90	5028.98	5029.30	28.00	68.43
	33800.000	14.94	200.00	11.07	5015.96	2900.00	7.05	5027.03	5029.64	28.00	59.29
	33800.000	14.94	200.00	11.07	5015.96	2900.00	7.05	5027.03	5029.64	28.00	59.29
	33800.000	15.32	200.00	13.32	5015.96	4400.00	7.92	5029.28	5029.64	28.00	68.33
	34000.000	15.16	200.00	11.03	5016.29	2900.00	7.09	5027.32	5029.97	28.00	59.14
	34000.000	15.16	200.00	11.03	5016.29	2900.00	7.09	5027.32	5029.97	28.00	59.14
	34000.000	15.52	200.00	13.29	5016.29	4400.00	7.96	5029.58	5029.97	28.00	68.18
	34141.000	23.39	141.00	11.07	5016.52	2900.00	7.06	5027.59	5030.20	35.00	59.27
	34141.000	23.39	141.00	11.07	5016.52	2900.00	7.06	5027.59	5030.20	35.00	59.27
	34141.000	23.95	141.00	13.33	5016.52	4400.00	7.92	5029.86	5030.20	35.00	68.33
*	34210.000	1.18	68.00	11.65	5016.64	2900.00	4.76	5028.29	5031.40	13.00	75.58
*	34210.000	1.18	68.00	11.65	5016.64	2900.00	4.76	5028.29	5031.40	13.00	75.58
*	34210.000	1.28	68.00	14.06	5016.64	4400.00	5.48	5030.70	5031.40	13.00	85.22

Run Date: 17DEC96 Run Time: 14:11:27 HMVersion: 6.52 Data File: testsm10.hec

SECNO	10*KS	XLCH	DEPTH	ELMIN	Q	VCH	CWSEL	RBEL	K*XNCH	TOPWID
* 34215.000	4.68	5.00	11.65	5016.64	2900.00	8.58	5028.29	100000.00	13.00	29.00
* 34215.000	4.68	5.00	11.65	5016.64	2900.00	8.58	5028.29	100000.00	13.00	29.00
* 34215.000	6.48	5.00	14.06	5016.64	4400.00	10.79	5030.70	100000.00	13.00	29.00
34359.000	4.89	144.00	11.47	5016.89	2900.00	8.72	5028.36	100000.00	13.00	29.00
34359.000	4.89	144.00	11.47	5016.89	2900.00	8.72	5028.36	100000.00	13.00	29.00
34359.000	6.68	144.00	13.90	5016.89	4400.00	10.91	5030.79	100000.00	13.00	29.00
34364.000	6.56	5.00	12.44	5016.90	2900.00	4.32	5029.34	5033.50	35.00	78.81
34364.000	6.56	5.00	12.44	5016.90	2900.00	4.32	5029.34	5033.50	35.00	78.81
34364.000	6.12	5.00	15.55	5016.90	4400.00	4.71	5032.45	5033.50	35.00	91.22
34450.000	5.77	85.90	12.40	5017.04	2500.00	3.99	5029.44	5033.70	35.00	75.01
34450.000	7.47	85.90	12.34	5017.04	2820.00	4.53	5029.38	5033.70	35.00	74.81
34450.000	6.21	85.90	15.47	5017.04	4080.00	4.66	5032.51	5033.70	35.00	87.12
* 34615.000	16.97	165.00	12.07	5017.30	2500.00	6.05	5029.37	5033.90	35.00	58.43
* 34615.000	22.28	165.00	11.98	5017.30	2820.00	6.91	5029.28	5033.90	35.00	58.10
* 34615.000	15.95	165.00	15.12	5017.30	4080.00	6.69	5032.42	5033.90	35.00	70.67
34800.000	3.21	185.00	12.60	5017.43	1200.00	2.70	5030.03	5034.03	35.00	60.55
34800.000	11.03	185.00	12.54	5017.43	2200.00	4.99	5029.97	5034.03	35.00	60.32
34800.000	11.65	185.00	15.43	5017.43	3660.00	5.79	5032.86	5034.03	35.00	71.94
34900.000	2.09	100.00	12.55	5017.50	1200.00	2.72	5030.05	5034.10	28.00	60.37
34900.000	7.01	100.00	12.56	5017.50	2200.00	4.98	5030.06	5034.10	28.00	60.39
34900.000	7.40	100.00	15.46	5017.50	3660.00	5.77	5032.96	5034.10	28.00	72.03
35000.000	2.12	100.00	12.50	5017.57	1200.00	2.73	5030.07	5034.17	28.00	60.19
35000.000	6.98	100.00	12.56	5017.57	2200.00	4.97	5030.13	5034.17	28.00	60.44
35000.000	7.39	100.00	15.46	5017.57	3660.00	5.77	5033.03	5034.17	28.00	72.05
35200.000	2.21	200.00	12.40	5017.71	1200.00	2.77	5030.11	5034.31	28.00	59.78
35200.000	7.01	200.00	12.56	5017.71	2200.00	4.98	5030.27	5034.31	28.00	60.40
35200.000	7.37	200.00	15.47	5017.71	3660.00	5.76	5033.18	5034.31	28.00	72.08
35400.000	2.29	200.00	12.30	5017.85	1200.00	2.81	5030.15	5034.45	28.00	59.38
35400.000	7.01	200.00	12.56	5017.85	2200.00	4.98	5030.41	5034.45	28.00	60.39
35400.000	7.35	200.00	15.48	5017.85	3660.00	5.76	5033.33	5034.45	28.00	72.12
35600.000	2.37	200.00	12.21	5017.99	1200.00	2.85	5030.20	5034.59	28.00	59.00
35600.000	7.01	200.00	12.56	5017.99	2200.00	4.98	5030.55	5034.59	28.00	60.40
35600.000	7.34	200.00	15.49	5017.99	3660.00	5.75	5033.48	5034.59	28.00	72.15
35800.000	2.46	200.00	12.11	5018.13	1200.00	2.89	5030.24	5034.73	28.00	58.62
35800.000	7.01	200.00	12.56	5018.13	2200.00	4.98	5030.69	5034.73	28.00	60.40
35800.000	7.32	200.00	15.49	5018.13	3660.00	5.75	5033.62	5034.73	28.00	72.18
36000.000	2.15	200.00	12.04	5018.27	1100.00	2.69	5030.31	5033.27	28.00	58.08
36000.000	6.35	200.00	12.59	5018.27	2100.00	4.75	5030.86	5033.27	28.00	60.31
36000.000	6.98	200.00	15.51	5018.27	3600.00	5.67	5033.78	5033.27	28.00	70.00

SECNO	10*KS	XLCH	DEPTH	ELMIN	Q	VCH	CWSEL	RBEL	K*XNCH	TOPWID
36200.000	2.22	200.00	11.94	5018.41	1100.00	2.72	5030.35	5033.41	28.00	57.73
36200.000	6.37	200.00	12.58	5018.41	2100.00	4.75	5030.99	5033.41	28.00	60.28
36200.000	6.95	200.00	15.51	5018.41	3600.00	5.66	5033.92	5033.41	28.00	70.00
36400.000	2.30	200.00	11.84	5018.55	1100.00	2.76	5030.39	5033.55	28.00	57.33
36400.000	6.41	200.00	12.56	5018.55	2100.00	4.76	5031.11	5033.55	28.00	60.21
36400.000	6.96	200.00	15.51	5018.55	3600.00	5.67	5034.06	5033.55	28.00	70.00
36600.000	2.39	200.00	11.75	5018.69	1100.00	2.80	5030.44	5033.69	28.00	56.95
36600.000	6.44	200.00	12.55	5018.69	2100.00	4.77	5031.24	5033.69	28.00	60.15
36600.000	6.97	200.00	15.51	5018.69	3600.00	5.67	5034.20	5033.69	28.00	70.00
36800.000	2.48	200.00	11.65	5018.83	1100.00	2.84	5030.48	5033.83	28.00	56.57
36800.000	6.47	200.00	12.54	5018.83	2100.00	4.78	5031.37	5033.83	28.00	60.10
36800.000	6.97	200.00	15.51	5018.83	3600.00	5.67	5034.34	5033.83	28.00	70.00
37000.000	2.57	200.00	11.56	5018.97	1100.00	2.87	5030.53	5033.97	28.00	56.21
37000.000	6.50	200.00	12.53	5018.97	2100.00	4.79	5031.50	5033.97	28.00	60.06
37000.000	6.97	200.00	15.51	5018.97	3600.00	5.67	5034.48	5033.97	28.00	70.00
37160.000	2.64	160.00	11.49	5019.08	1100.00	2.90	5030.57	5034.10	28.00	55.91
37160.000	6.52	160.00	12.52	5019.08	2100.00	4.79	5031.60	5034.10	28.00	60.02
37160.000	6.97	160.00	15.51	5019.08	3600.00	5.67	5034.59	5034.10	28.00	70.00
37200.000	1.88	40.00	11.51	5019.11	1100.00	2.47	5030.62	5032.10	28.00	65.93
37200.000	4.45	40.00	12.63	5019.11	2100.00	4.03	5031.74	5032.10	28.00	70.51
37200.000	4.61	40.00	15.65	5019.11	3600.00	4.87	5034.76	5032.10	28.00	72.00
37240.000	2.71	40.00	11.47	5019.14	1100.00	2.78	5030.61	5032.70	28.00	63.89
37240.000	6.18	40.00	12.58	5019.14	2100.00	4.49	5031.72	5032.70	28.00	68.16
37240.000	5.92	40.00	15.59	5019.14	3600.00	5.27	5034.73	5032.70	28.00	72.00
37315.000	2.70	85.00	11.43	5019.20	1100.00	2.93	5030.63	5034.20	28.00	55.73
37315.000	6.43	85.00	12.54	5019.20	2100.00	4.77	5031.74	5034.20	28.00	60.21
37315.000	6.87	85.00	15.54	5019.20	3600.00	5.64	5034.74	5034.20	28.00	70.00
37400.000	2.75	85.00	11.39	5019.26	1100.00	2.95	5030.65	5034.26	28.00	55.56
37400.000	6.47	85.00	12.54	5019.26	2100.00	4.78	5031.80	5034.26	28.00	60.14
37400.000	6.89	85.00	15.54	5019.26	3600.00	5.65	5034.80	5034.26	28.00	70.00
37600.000	2.85	200.00	11.30	5019.40	1100.00	2.98	5030.70	5034.40	28.00	55.21
37600.000	6.50	200.00	12.52	5019.40	2100.00	4.78	5031.92	5034.40	28.00	60.10
37600.000	6.89	200.00	15.54	5019.40	3600.00	5.65	5034.94	5034.40	28.00	70.00
37800.000	2.94	200.00	11.22	5019.54	1100.00	3.02	5030.76	5034.54	28.00	54.87
37800.000	6.52	200.00	12.51	5019.54	2100.00	4.79	5032.05	5034.54	28.00	60.05
37800.000	6.89	200.00	15.54	5019.54	3600.00	5.65	5035.08	5034.54	28.00	70.00
38000.000	4.75	200.00	11.15	5019.68	1100.00	3.06	5030.83	5034.68	35.00	54.57
38000.000	10.11	200.00	12.54	5019.68	2100.00	4.78	5032.22	5034.68	35.00	60.14
38000.000	10.65	200.00	15.57	5019.68	3600.00	5.63	5035.25	5034.68	35.00	70.00

	SECNO	10*KS	XLCH	DEPTH	ELMIN	Q	VCH	CWSEL	RBEL	K*XNCH	TOPWID
	38200.000	4.84	200.00	11.10	5019.82	1100.00	3.08	5030.92	5034.82	35.00	54.37
	38200.000	1.32	200.00	12.82	5019.82	800.00	1.75	5032.65	5034.82	35.00	61.30
	38200.000	3.91	200.00	15.90	5019.82	2300.00	3.47	5035.72	5034.82	35.00	70.00
	38375.000	4.90	175.00	11.07	5019.94	1100.00	3.10	5031.01	5034.41	35.00	54.22
	38375.000	1.37	175.00	12.73	5019.94	800.00	1.77	5032.67	5034.41	35.00	60.86
	38375.000	3.94	175.00	15.85	5019.94	2300.00	3.50	5035.79	5034.41	35.00	67.80
	38424.000	4.39	49.00	11.07	5019.97	1100.00	2.97	5031.04	5034.40	35.00	55.66
	38424.000	1.25	49.00	12.71	5019.97	800.00	1.71	5032.68	5034.40	35.00	62.22
	38424.000	3.62	49.00	15.85	5019.97	2300.00	3.39	5035.82	5034.40	35.00	69.13
*	38429.000	10.10	5.00	11.08	5019.97	1100.00	8.77	5031.05	100000.00	13.00	11.33
*	38429.000	3.83	5.00	12.71	5019.97	800.00	5.56	5032.68	100000.00	13.00	11.33
*	38429.000	18.69	5.00	15.85	5019.97	2300.00	12.81	5035.82	100000.00	13.00	11.33
	38524.000	10.68	95.00	10.83	5020.32	1100.00	8.97	5031.15	100000.00	13.00	11.33
	38524.000	4.07	95.00	12.40	5020.32	800.00	5.70	5032.72	100000.00	13.00	11.33
	38524.000	19.16	95.00	15.68	5020.32	2300.00	12.95	5036.00	100000.00	13.00	11.33
	38529.000	18.60	5.00	10.83	5020.32	1100.00	8.96	5031.15	5020.32	35.00	11.33
	38529.000	6.27	5.00	12.40	5020.32	800.00	5.69	5032.72	5020.32	35.00	11.33
	38529.000	23.63	5.00	15.70	5020.32	2300.00	12.94	5036.02	5020.32	35.00	11.33
*	38552.000	2.34	25.00	12.11	5020.34	1100.00	2.25	5032.45	5036.10	35.00	70.56
*	38552.000	0.92	25.00	12.90	5020.34	800.00	1.47	5033.24	5036.10	35.00	74.49
*	38552.000	1.29	25.00	18.46	5020.34	2300.00	2.26	5038.80	5036.10	35.00	88.78
	38636.000	2.38	84.00	12.07	5020.40	1100.00	2.27	5032.47	5036.16	35.00	70.34
	38636.000	0.94	84.00	12.85	5020.40	800.00	1.48	5033.25	5036.16	35.00	74.23
	38636.000	1.31	84.00	18.41	5020.40	2300.00	2.27	5038.81	5036.16	35.00	88.78
	38800.000	2.99	164.00	11.48	5021.02	1100.00	2.47	5032.50	5036.78	35.00	67.43
	38800.000	1.18	164.00	12.24	5021.02	800.00	1.61	5033.26	5036.78	35.00	71.21
	38800.000	1.54	164.00	17.80	5021.02	2300.00	2.40	5038.82	5036.78	35.00	88.78
	38846.000	3.20	46.00	11.33	5021.19	1100.00	2.54	5032.52	5036.95	35.00	66.62
	38846.000	1.25	46.00	12.08	5021.19	800.00	1.65	5033.27	5036.95	35.00	70.37
	38846.000	1.62	46.00	17.64	5021.19	2300.00	2.43	5038.83	5036.95	35.00	88.78
	38895.000	4.80	49.00	11.11	5021.39	1100.00	3.07	5032.50	5036.10	35.00	54.46
	38895.000	1.88	49.00	11.87	5021.39	800.00	2.00	5033.26	5036.10	35.00	57.52
	38895.000	2.51	49.00	17.41	5021.39	2300.00	3.00	5038.80	5036.10	35.00	68.86
*	38900.000	14.39	5.00	11.12	5021.39	1100.00	9.90	5032.51	100000.00	13.00	10.00
*	38900.000	6.50	5.00	11.87	5021.39	800.00	6.74	5033.26	100000.00	13.00	10.00
*	38900.000	21.86	5.00	17.42	5021.39	2300.00	13.21	5038.81	100000.00	13.00	10.00
	38980.000	14.97	80.00	10.93	5021.69	1100.00	10.06	5032.62	100000.00	13.00	10.00
	38980.000	6.83	80.00	11.63	5021.69	800.00	6.88	5033.31	100000.00	13.00	10.00
	38980.000	22.22	80.00	17.29	5021.69	2300.00	13.30	5038.98	100000.00	13.00	10.00

	SECNO	10*KS	XLCH	DEPTH	ELMIN	Q	VCH	CWSEL	RBEL	K*XNCH	TOPWID
	38985.000	23.30	5.00	10.91	5021.72	1100.00	10.08	5032.63	5021.72	35.00	10.00
	38985.000	10.05	5.00	11.60	5021.72	800.00	6.90	5033.32	5021.72	35.00	10.00
*	38985.000	1.21	5.00	20.17	5021.72	2300.00	3.46	5041.89	5021.72	35.00	67.52
*	39010.000	2.85	25.00	12.45	5021.82	1100.00	2.53	5034.27	5036.10	35.00	59.83
*	39010.000	1.63	25.00	12.26	5021.82	800.00	1.89	5034.08	5036.10	35.00	59.02
	39010.000	1.23	25.00	20.09	5021.82	2300.00	2.44	5041.91	5036.10	35.00	67.12
	39200.000	3.69	190.00	11.78	5022.54	1100.00	2.78	5034.32	5036.82	35.00	57.11
	39200.000	2.12	190.00	11.56	5022.54	800.00	2.09	5034.10	5036.82	35.00	56.25
	39200.000	1.45	190.00	19.39	5022.54	2300.00	2.57	5041.93	5036.82	35.00	67.12
	39400.000	4.86	200.00	11.08	5023.30	1100.00	3.09	5034.38	5037.58	35.00	54.33
	39400.000	2.84	200.00	10.84	5023.30	800.00	2.33	5034.14	5037.58	35.00	53.36
	39400.000	1.86	200.00	18.65	5023.30	2300.00	2.72	5041.95	5037.58	35.00	67.12
	39552.000	6.02	152.00	10.57	5023.88	1100.00	3.34	5034.45	5038.16	35.00	52.27
	39552.000	3.58	152.00	10.30	5023.88	800.00	2.54	5034.18	5038.16	35.00	51.19
	39552.000	2.12	152.00	18.09	5023.88	2300.00	2.85	5041.97	5038.16	35.00	67.12

SUMMARY OF ERRORS AND SPECIAL NOTES

```
WARNING SECNO=  34210.000  PROFILE=  1  CONVEYANCE CHANGE OUTSIDE ACCEPTABLE RANGE
WARNING SECNO=  34210.000  PROFILE=  2  CONVEYANCE CHANGE OUTSIDE ACCEPTABLE RANGE
WARNING SECNO=  34210.000  PROFILE=  3  CONVEYANCE CHANGE OUTSIDE ACCEPTABLE RANGE

WARNING SECNO=  34215.000  PROFILE=  1  CONVEYANCE CHANGE OUTSIDE ACCEPTABLE RANGE
WARNING SECNO=  34215.000  PROFILE=  2  CONVEYANCE CHANGE OUTSIDE ACCEPTABLE RANGE
WARNING SECNO=  34215.000  PROFILE=  3  CONVEYANCE CHANGE OUTSIDE ACCEPTABLE RANGE

WARNING SECNO=  34615.000  PROFILE=  1  CONVEYANCE CHANGE OUTSIDE ACCEPTABLE RANGE
WARNING SECNO=  34615.000  PROFILE=  2  CONVEYANCE CHANGE OUTSIDE ACCEPTABLE RANGE
WARNING SECNO=  34615.000  PROFILE=  3  CONVEYANCE CHANGE OUTSIDE ACCEPTABLE RANGE

WARNING SECNO=  38429.000  PROFILE=  1  CONVEYANCE CHANGE OUTSIDE ACCEPTABLE RANGE
WARNING SECNO=  38429.000  PROFILE=  2  CONVEYANCE CHANGE OUTSIDE ACCEPTABLE RANGE
WARNING SECNO=  38429.000  PROFILE=  3  CONVEYANCE CHANGE OUTSIDE ACCEPTABLE RANGE

WARNING SECNO=  38552.000  PROFILE=  1  CONVEYANCE CHANGE OUTSIDE ACCEPTABLE RANGE
WARNING SECNO=  38552.000  PROFILE=  2  CONVEYANCE CHANGE OUTSIDE ACCEPTABLE RANGE
WARNING SECNO=  38552.000  PROFILE=  3  CONVEYANCE CHANGE OUTSIDE ACCEPTABLE RANGE

WARNING SECNO=  38900.000  PROFILE=  1  CONVEYANCE CHANGE OUTSIDE ACCEPTABLE RANGE
WARNING SECNO=  38900.000  PROFILE=  2  CONVEYANCE CHANGE OUTSIDE ACCEPTABLE RANGE
WARNING SECNO=  38900.000  PROFILE=  3  CONVEYANCE CHANGE OUTSIDE ACCEPTABLE RANGE

WARNING SECNO=  38985.000  PROFILE=  3  CONVEYANCE CHANGE OUTSIDE ACCEPTABLE RANGE

WARNING SECNO=  39010.000  PROFILE=  1  CONVEYANCE CHANGE OUTSIDE ACCEPTABLE RANGE
WARNING SECNO=  39010.000  PROFILE=  2  CONVEYANCE CHANGE OUTSIDE ACCEPTABLE RANGE
```

12'x12' BOX

THIS RUN EXECUTED 18DEC96 7:59:02

****
HEC-2 WATER SURFACE PROFILES

Version 4.6.2; May 1991
****

NOTE- ASTERISK (*) AT LEFT OF CROSS-SECTION NUMBER INDICATES MESSAGE IN SUMMARY OF ERRORS LIST

SUBCRITICAL RUN - W/

SUMMARY PRINTOUT

	SECNO	10*KS	XLCH	DEPTH	ELMIN	Q	VCH	CWSEL	RBEL	K*XNCH	TOPWID
	33000.000	16.92	0.00	11.01	5014.62	3050.00	7.48	5025.63	5028.30	28.00	59.04
	33000.000	16.92	0.00	11.01	5014.62	3050.00	7.48	5025.63	5028.30	28.00	59.04
	33000.000	16.71	0.00	13.27	5014.62	4550.00	8.25	5027.89	5028.30	28.00	68.09
	33200.000	16.89	200.00	11.02	5014.95	3050.00	7.48	5025.97	5028.63	28.00	59.06
	33200.000	16.89	200.00	11.02	5014.95	3050.00	7.48	5025.97	5028.63	28.00	59.06
	33200.000	16.71	200.00	13.27	5014.95	4550.00	8.25	5028.23	5028.63	28.00	68.09
	33400.000	16.86	200.00	11.02	5015.29	3050.00	7.47	5026.31	5028.97	28.00	59.08
	33400.000	16.86	200.00	11.02	5015.29	3050.00	7.47	5026.31	5028.97	28.00	59.08
	33400.000	16.71	200.00	13.27	5015.29	4550.00	8.25	5028.56	5028.97	28.00	68.09
	33600.000	14.68	200.00	11.12	5015.62	2900.00	7.01	5026.74	5029.30	28.00	59.47
	33600.000	14.68	200.00	11.12	5015.62	2900.00	7.01	5026.74	5029.30	28.00	59.47
	33600.000	15.20	200.00	13.36	5015.62	4400.00	7.90	5028.98	5029.30	28.00	68.43
	33800.000	14.94	200.00	11.07	5015.96	2900.00	7.05	5027.03	5029.64	28.00	59.29
	33800.000	14.94	200.00	11.07	5015.96	2900.00	7.05	5027.03	5029.64	28.00	59.29
	33800.000	15.32	200.00	13.32	5015.96	4400.00	7.92	5029.28	5029.64	28.00	68.33
	34000.000	15.16	200.00	11.03	5016.29	2900.00	7.09	5027.32	5029.97	28.00	59.14
	34000.000	15.16	200.00	11.03	5016.29	2900.00	7.09	5027.32	5029.97	28.00	59.14
	34000.000	15.52	200.00	13.29	5016.29	4400.00	7.96	5029.58	5029.97	28.00	68.18
	34141.000	23.39	141.00	11.07	5016.52	2900.00	7.06	5027.59	5030.20	35.00	59.27
	34141.000	23.39	141.00	11.07	5016.52	2900.00	7.06	5027.59	5030.20	35.00	59.27
	34141.000	23.95	141.00	13.33	5016.52	4400.00	7.92	5029.86	5030.20	35.00	68.33
*	34210.000	1.18	68.00	11.65	5016.64	2900.00	4.76	5028.29	5031.40	13.00	75.58
*	34210.000	1.18	68.00	11.65	5016.64	2900.00	4.76	5028.29	5031.40	13.00	75.58
*	34210.000	1.28	68.00	14.06	5016.64	4400.00	5.48	5030.70	5031.40	13.00	85.22

	SECNO	10*KS	XLCH	DEPTH	ELMIN	Q	VCH	CWSEL	RBEL	K*XNCH	TOPWID
*	34215.000	4.68	5.00	11.65	5016.64	2900.00	8.58	5028.29	100000.00	13.00	29.00
*	34215.000	4.68	5.00	11.65	5016.64	2900.00	8.58	5028.29	100000.00	13.00	29.00
*	34215.000	6.48	5.00	14.06	5016.64	4400.00	10.79	5030.70	100000.00	13.00	29.00
	34359.000	4.89	144.00	11.47	5016.89	2900.00	8.72	5028.36	100000.00	13.00	29.00
	34359.000	4.89	144.00	11.47	5016.89	2900.00	8.72	5028.36	100000.00	13.00	29.00
	34359.000	6.68	144.00	13.90	5016.89	4400.00	10.91	5030.79	100000.00	13.00	29.00
	34364.000	6.56	5.00	12.44	5016.90	2900.00	4.32	5029.34	5033.50	35.00	78.81
	34364.000	6.56	5.00	12.44	5016.90	2900.00	4.32	5029.34	5033.50	35.00	78.81
	34364.000	6.12	5.00	15.55	5016.90	4400.00	4.71	5032.45	5033.50	35.00	91.22
	34450.000	5.77	85.90	12.40	5017.04	2500.00	3.99	5029.44	5033.70	35.00	75.01
	34450.000	7.47	85.90	12.34	5017.04	2820.00	4.53	5029.38	5033.70	35.00	74.81
	34450.000	6.21	85.90	15.47	5017.04	4080.00	4.66	5032.51	5033.70	35.00	87.12
*	34615.000	16.97	165.00	12.07	5017.30	2500.00	6.05	5029.37	5033.90	35.00	58.43
*	34615.000	22.28	165.00	11.98	5017.30	2820.00	6.91	5029.28	5033.90	35.00	58.10
*	34615.000	15.95	165.00	15.12	5017.30	4080.00	6.69	5032.42	5033.90	35.00	70.67
	34800.000	3.21	185.00	12.60	5017.43	1200.00	2.70	5030.03	5034.03	35.00	60.55
	34800.000	11.03	185.00	12.54	5017.43	2200.00	4.99	5029.97	5034.03	35.00	60.32
	34800.000	11.65	185.00	15.43	5017.43	3660.00	5.79	5032.86	5034.03	35.00	71.94
	34900.000	2.09	100.00	12.55	5017.50	1200.00	2.72	5030.05	5034.10	28.00	60.37
	34900.000	7.01	100.00	12.56	5017.50	2200.00	4.98	5030.06	5034.10	28.00	60.39
	34900.000	7.40	100.00	15.46	5017.50	3660.00	5.77	5032.96	5034.10	28.00	72.03
	35000.000	2.12	100.00	12.50	5017.57	1200.00	2.73	5030.07	5034.17	28.00	60.19
	35000.000	6.98	100.00	12.56	5017.57	2200.00	4.97	5030.13	5034.17	28.00	60.44
	35000.000	7.39	100.00	15.46	5017.57	3660.00	5.77	5033.03	5034.17	28.00	72.05
	35200.000	2.21	200.00	12.40	5017.71	1200.00	2.77	5030.11	5034.31	28.00	59.78
	35200.000	7.01	200.00	12.56	5017.71	2200.00	4.98	5030.27	5034.31	28.00	60.40
	35200.000	7.37	200.00	15.47	5017.71	3660.00	5.76	5033.18	5034.31	28.00	72.08
	35400.000	2.29	200.00	12.30	5017.85	1200.00	2.81	5030.15	5034.45	28.00	59.38
	35400.000	7.01	200.00	12.56	5017.85	2200.00	4.98	5030.41	5034.45	28.00	60.39
	35400.000	7.35	200.00	15.48	5017.85	3660.00	5.76	5033.33	5034.45	28.00	72.12
	35600.000	2.37	200.00	12.21	5017.99	1200.00	2.85	5030.20	5034.59	28.00	59.00
	35600.000	7.01	200.00	12.56	5017.99	2200.00	4.98	5030.55	5034.59	28.00	60.40
	35600.000	7.34	200.00	15.49	5017.99	3660.00	5.75	5033.48	5034.59	28.00	72.15
	35800.000	2.46	200.00	12.11	5018.13	1200.00	2.89	5030.24	5034.73	28.00	58.62
	35800.000	7.01	200.00	12.56	5018.13	2200.00	4.98	5030.69	5034.73	28.00	60.40
	35800.000	7.32	200.00	15.49	5018.13	3660.00	5.75	5033.62	5034.73	28.00	72.18
	36000.000	2.15	200.00	12.04	5018.27	1100.00	2.69	5030.31	5033.27	28.00	58.08
	36000.000	6.35	200.00	12.59	5018.27	2100.00	4.75	5030.86	5033.27	28.00	60.31
	36000.000	6.98	200.00	15.51	5018.27	3600.00	5.67	5033.78	5033.27	28.00	70.00

SECNO	10*KS	XLCH	DEPTH	ELMIN	Q	VCH	CWSEL	RBEL	K*XNCH	TOPWID
36200.000	2.22	200.00	11.94	5018.41	1100.00	2.72	5030.35	5033.41	28.00	57.73
36200.000	6.37	200.00	12.58	5018.41	2100.00	4.75	5030.99	5033.41	28.00	60.28
36200.000	6.95	200.00	15.51	5018.41	3600.00	5.66	5033.92	5033.41	28.00	70.00
36400.000	2.30	200.00	11.84	5018.55	1100.00	2.76	5030.39	5033.55	28.00	57.33
36400.000	6.41	200.00	12.56	5018.55	2100.00	4.76	5031.11	5033.55	28.00	60.21
36400.000	6.96	200.00	15.51	5018.55	3600.00	5.67	5034.06	5033.55	28.00	70.00
36600.000	2.39	200.00	11.75	5018.69	1100.00	2.80	5030.44	5033.69	28.00	56.95
36600.000	6.44	200.00	12.55	5018.69	2100.00	4.77	5031.24	5033.69	28.00	60.15
36600.000	6.97	200.00	15.51	5018.69	3600.00	5.67	5034.20	5033.69	28.00	70.00
36800.000	2.48	200.00	11.65	5018.83	1100.00	2.84	5030.48	5033.83	28.00	56.57
36800.000	6.47	200.00	12.54	5018.83	2100.00	4.78	5031.37	5033.83	28.00	60.10
36800.000	6.97	200.00	15.51	5018.83	3600.00	5.67	5034.34	5033.83	28.00	70.00
37000.000	2.57	200.00	11.56	5018.97	1100.00	2.87	5030.53	5033.97	28.00	56.21
37000.000	6.50	200.00	12.53	5018.97	2100.00	4.79	5031.50	5033.97	28.00	60.06
37000.000	6.97	200.00	15.51	5018.97	3600.00	5.67	5034.48	5033.97	28.00	70.00
37160.000	2.64	160.00	11.49	5019.08	1100.00	2.90	5030.57	5034.10	28.00	55.91
37160.000	6.52	160.00	12.52	5019.08	2100.00	4.79	5031.60	5034.10	28.00	60.02
37160.000	6.97	160.00	15.51	5019.08	3600.00	5.67	5034.59	5034.10	28.00	70.00
37200.000	1.88	40.00	11.51	5019.11	1100.00	2.47	5030.62	5032.10	28.00	65.93
37200.000	4.45	40.00	12.63	5019.11	2100.00	4.03	5031.74	5032.10	28.00	70.51
37200.000	4.61	40.00	15.65	5019.11	3600.00	4.87	5034.76	5032.10	28.00	72.00
37240.000	2.71	40.00	11.47	5019.14	1100.00	2.78	5030.61	5032.70	28.00	63.89
37240.000	6.18	40.00	12.58	5019.14	2100.00	4.49	5031.72	5032.70	28.00	68.16
37240.000	5.92	40.00	15.59	5019.14	3600.00	5.27	5034.73	5032.70	28.00	72.00
37315.000	2.70	85.00	11.43	5019.20	1100.00	2.93	5030.63	5034.20	28.00	55.73
37315.000	6.43	85.00	12.54	5019.20	2100.00	4.77	5031.74	5034.20	28.00	60.21
37315.000	6.87	85.00	15.54	5019.20	3600.00	5.64	5034.74	5034.20	28.00	70.00
37400.000	2.75	85.00	11.39	5019.26	1100.00	2.95	5030.65	5034.26	28.00	55.56
37400.000	6.47	85.00	12.54	5019.26	2100.00	4.78	5031.80	5034.26	28.00	60.14
37400.000	6.89	85.00	15.54	5019.26	3600.00	5.65	5034.80	5034.26	28.00	70.00
37600.000	2.85	200.00	11.30	5019.40	1100.00	2.98	5030.70	5034.40	28.00	55.21
37600.000	6.50	200.00	12.52	5019.40	2100.00	4.78	5031.92	5034.40	28.00	60.10
37600.000	6.89	200.00	15.54	5019.40	3600.00	5.65	5034.94	5034.40	28.00	70.00
37800.000	2.94	200.00	11.22	5019.54	1100.00	3.02	5030.76	5034.54	28.00	54.87
37800.000	6.52	200.00	12.51	5019.54	2100.00	4.79	5032.05	5034.54	28.00	60.05
37800.000	6.89	200.00	15.54	5019.54	3600.00	5.65	5035.08	5034.54	28.00	70.00
38000.000	4.75	200.00	11.15	5019.68	1100.00	3.06	5030.83	5034.68	35.00	54.57
38000.000	10.11	200.00	12.54	5019.68	2100.00	4.78	5032.22	5034.68	35.00	60.14
38000.000	10.65	200.00	15.57	5019.68	3600.00	5.63	5035.25	5034.68	35.00	70.00

	SECNO	10*KS	XLCH	DEPTH	ELMIN	Q	VCH	CWSEL	RBEL	K*XNCH	TOPWID	
	38200.000	4.84	200.00	11.10	5019.82	1100.00	3.08	5030.92	5034.82	35.00	54.37	
	38200.000	1.32	200.00	12.82	5019.82	800.00	1.75	5032.65	5034.82	35.00	61.30	
	38200.000	3.91	200.00	15.90	5019.82	2300.00	3.47	5035.72	5034.82	35.00	70.00	
	38375.000	4.90	175.00	11.07	5019.94	1100.00	3.10	5031.01	5034.41	35.00	54.22	
	38375.000	1.37	175.00	12.73	5019.94	800.00	1.77	5032.67	5034.41	35.00	60.86	
	38375.000	3.94	175.00	15.85	5019.94	2300.00	3.50	5035.79	5034.41	35.00	67.80	
	38424.000	4.39	49.00	11.07	5019.97	1100.00	2.97	5031.04	5034.40	35.00	55.66	
	38424.000	1.25	49.00	12.71	5019.97	800.00	1.71	5032.68	5034.40	35.00	62.22	
	38424.000	3.62	49.00	15.85	5019.97	2300.00	3.39	5035.82	5034.40	35.00	69.13	
*	38429.000	10.10	5.00	11.08	5019.97	1100.00	8.77	5031.05	100000.00	13.00	11.33	
*	38429.000	3.83	5.00	12.71	5019.97	800.00	5.56	5032.68	100000.00	13.00	11.33	
*	38429.000	18.69	5.00	15.85	5019.97	2300.00	12.81	5035.82	100000.00	13.00	11.33	
	38524.000	10.68	95.00	10.83	5020.32	1100.00	8.97	5031.15	100000.00	13.00	11.33	UPSTREAM END OF
	38524.000	4.07	95.00	12.40	5020.32	800.00	5.70	5032.72	100000.00	13.00	11.33	BOX AT STADIUM
	38524.000	19.16	95.00	15.68	5020.32	2300.00	12.95	5036.00	100000.00	13.00	11.33	
	38529.000	18.60	5.00	10.83	5020.32	1100.00	8.96	5031.15	5020.32	35.00	11.33	
	38529.000	6.27	5.00	12.40	5020.32	800.00	5.69	5032.72	5020.32	35.00	11.33	
	38529.000	23.63	5.00	15.70	5020.32	2300.00	12.94	5036.02	5020.32	35.00	11.33	
*	38552.000	2.34	25.00	12.11	5020.34	1100.00	2.25	5032.45	5036.10	35.00	70.56	
*	38552.000	0.92	25.00	12.90	5020.34	800.00	1.47	5033.24	5036.10	35.00	74.49	
*	38552.000	1.29	25.00	18.46	5020.34	2300.00	2.26	5038.80	5036.10	35.00	88.78	
	38636.000	3.32	84.00	12.05	5020.40	1100.00	2.68	5032.45	5036.10	35.00	58.21	
	38636.000	1.31	84.00	12.84	5020.40	800.00	1.75	5033.24	5036.10	35.00	61.36	
	38636.000	1.94	84.00	18.38	5020.40	2300.00	2.72	5038.78	5036.10	35.00	72.80	
	38800.000	4.15	164.00	11.48	5021.02	1100.00	2.91	5032.50	5036.10	35.00	55.91	
	38800.000	1.64	164.00	12.24	5021.02	800.00	1.90	5033.26	5036.10	35.00	58.96	
	38800.000	2.27	164.00	17.79	5021.02	2300.00	2.89	5038.81	5036.10	35.00	70.32	
	38846.000	4.41	46.00	11.32	5021.19	1100.00	2.97	5032.51	5036.10	35.00	55.30	
	38846.000	1.74	46.00	12.08	5021.19	800.00	1.94	5033.27	5036.10	35.00	58.30	
	38846.000	2.37	46.00	17.63	5021.19	2300.00	2.94	5038.82	5036.10	35.00	69.64	
	38895.000	4.05	49.00	11.15	5021.39	1100.00	2.88	5032.54	5036.10	35.00	56.60	
	38895.000	1.61	49.00	11.89	5021.39	800.00	1.88	5033.28	5036.10	35.00	59.55	
	38895.000	2.22	49.00	17.44	5021.39	2300.00	2.87	5038.83	5036.10	35.00	70.86	
*	38900.000	8.41	5.00	11.16	5021.39	1100.00	8.22	5032.55	100000.00	13.00	12.00	DOWNSTREAM END OF
*	38900.000	3.81	5.00	11.89	5021.39	800.00	5.61	5033.28	100000.00	13.00	12.00	12' x 12' CBC @ GODDARD
*	38900.000	12.57	5.00	17.45	5021.39	2300.00	10.99	5038.84	100000.00	13.00	12.00	
	38980.000	8.88	80.00	10.93	5021.69	1100.00	8.40	5032.62	100000.00	13.00	12.00	UPSTREAM END OF
	38980.000	4.03	80.00	11.62	5021.69	800.00	5.74	5033.31	100000.00	13.00	12.00	12' x 12' CBC @ GODDARD
	38980.000	12.91	80.00	17.25	5021.69	2300.00	11.11	5038.94	100000.00	13.00	12.00	

	SECNO	10*KS	XLCH	DEPTH	ELMIN	Q	VCH	CWSEL	RBEL	K*XNCH	TOPWID
	38985.000	16.22	5.00	10.90	5021.72	1100.00	8.41	5032.62	5021.72	35.00	12.00
	38985.000	6.99	5.00	11.59	5021.72	800.00	5.75	5033.31	5021.72	35.00	12.00
*	38985.000	1.32	5.00	19.20	5021.72	2300.00	3.49	5040.92	5021.72	35.00	69.52
*	39010.000	3.52	25.00	11.90	5021.82	1100.00	2.73	5033.72	5036.10	35.00	57.61
*	39010.000	1.79	25.00	12.00	5021.82	800.00	1.96	5033.82	5036.10	35.00	58.00
	39010.000	1.67	25.00	19.12	5021.82	2300.00	2.63	5040.94	5036.10	35.00	67.12
	39200.000	4.57	190.00	11.24	5022.54	1100.00	3.01	5033.78	5036.10	35.00	54.94
	39200.000	2.35	190.00	11.31	5022.54	800.00	2.17	5033.85	5036.10	35.00	55.23
	39200.000	2.01	190.00	18.42	5022.54	2300.00	2.82	5040.96	5036.10	35.00	64.24
	39400.000	6.05	200.00	10.56	5023.30	1100.00	3.35	5033.86	5036.10	35.00	52.23
	39400.000	3.16	200.00	10.59	5023.30	800.00	2.42	5033.89	5036.10	35.00	52.36
	39400.000	2.45	200.00	17.69	5023.30	2300.00	3.05	5040.99	5036.10	35.00	61.20
	39552.000	7.52	152.00	10.06	5023.88	1100.00	3.63	5033.94	5036.10	35.00	50.23
	39552.000	3.99	152.00	10.05	5023.88	800.00	2.64	5033.93	5036.10	35.00	50.21
	39552.000	2.87	152.00	17.14	5023.88	2300.00	3.24	5041.02	5036.10	35.00	58.88

APPENDIX E

EXCERPTS FROM US ARMY CORPS OF ENGINEERS SOUTH DIVERSION CHANNEL - ORIGINAL DESIGN OUTFALL ANALYSIS - 54" STORM DRAIN

HYDRAULIC DESIGN - SUMMARY OF PERTINENT DATA
Station 385+28.90 to Station 396+30
SOUTH DIVERSION CHANNEL

TABLE 1

STATION	HYDRAULIC ELEMENTS				AVERAGE CHANNEL VELOCITY	ELEVATION ABOVE MSL			BERM Slope	REMARKS
	Section		Design Discharge	℄ Invert		℄ Invert	℄ WS	Top of Berm		
	b	z	Q	Slope						
385+28.9	10'	2	1,100	0.0007	2.4	5020.26	5033.2	5036.1	0.0003	Upstream of Stadium Boulevard Structure
390+99	10'	2	1,100	0.0007	2.4	5020.59	5033.3	5036.2	0.0003	
393+00	10'	2	1,100	0.0007	2.5	5020.80	5033.4	5036.3	0.0003	Centerline interior inlet
396+30	10'	2	1,100	0.0007	2.6	5021.04	5033.5	5036.4	0.0003	Upstream end of Channel

3/3/97

ANALYSIS OUTLET STRUCTURE TO SOUTH DIVERSION CHANNEL

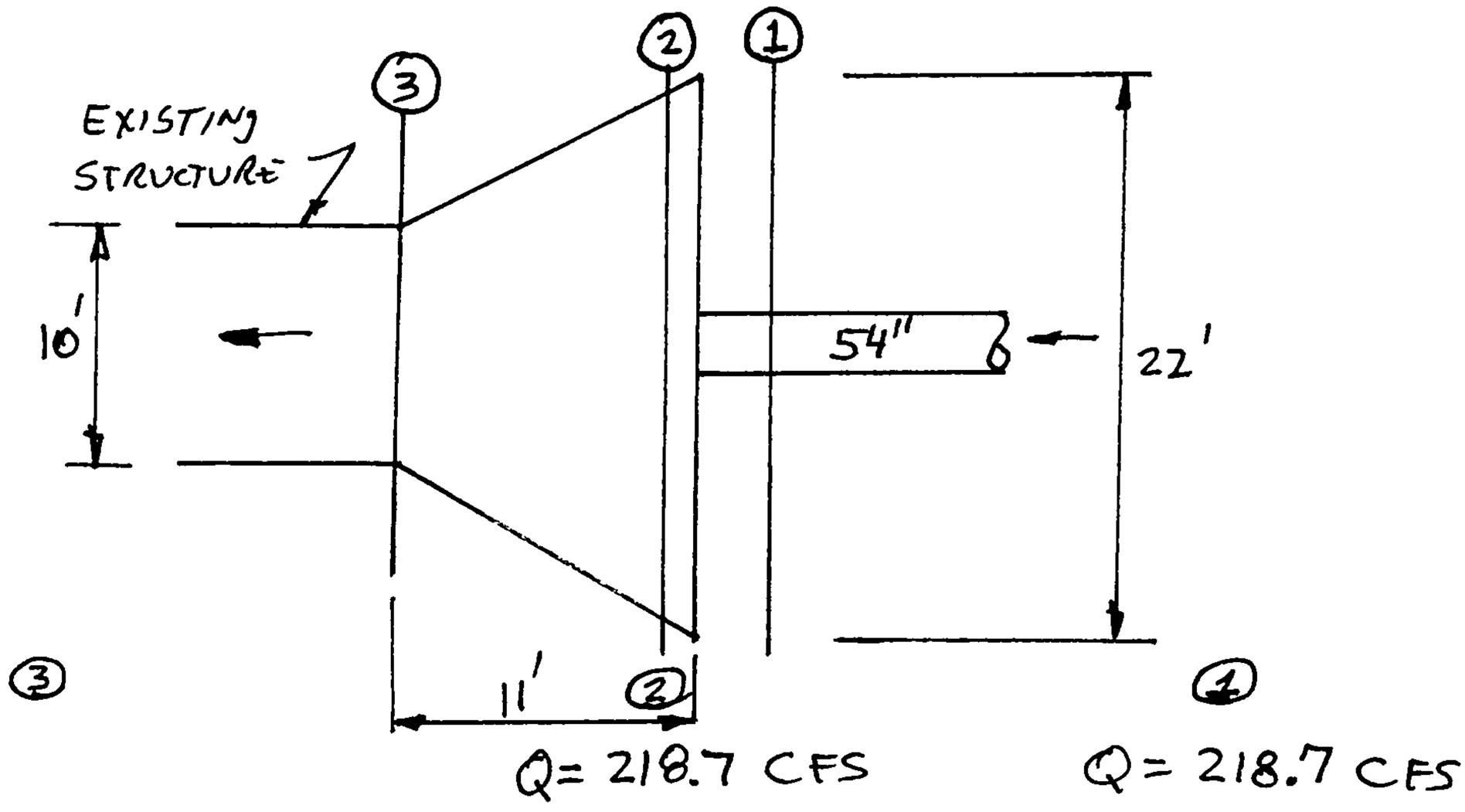

$A = 15.9\ FT^2$

$V = 13.8$ fps

$E_1 = 7.5'$

$F_1 = \frac{V}{\sqrt{gd}} = \frac{13.8}{\sqrt{32.2 \times 4.5}}$

$F_1 = 1.2$

ANALYZE ① to ②

$$E_1 = E_2 + \frac{.5(V_1 - V_2)^2}{64.4}$$

$$7.5' = E_2 + \frac{.5(15.9 - V_2)^2}{64.4}$$

try $d_2 = 0.5$

$$7.5' = 6.6 + \frac{.5(15.9 - 19.9)^2}{64.4}$$

$7.5 = 6.6 + .12$

$7.5 \neq 6.72$

BOHANNAN-HUSTON INC.

SCIENCE & TECHNOLOGY PARK AT UNM

PROJECT NAME PARK AT UNM SHEET 1 OF 5

PROJECT NO. 96281C BY HCS DATE 3/3/97

SUBJECT Flow Regime Check-54" RCP CH'D _____ DATE _____

try $d_2 = 0.4'$

$$7.5 = 10 + \frac{.5(15.9 - 24.9)^2}{64.4}$$

$$7.5 = 10 + 0.63 = 10.6$$

$7.5 \neq 10.6$ LIES inbetween $d_2 = 0.4'$ & $0.5'$

However, this section will be drowned out By constriction At SECTION ③

∴ ANALYZE FROM SECTION ① TO ③

$$7.5' = E_3 + \frac{.5(V_1 - V_3)^2}{64.4}$$

(comment Flow will choke — + so sub)

Try $d_3 = 6.'$

$$7.5 = 6.7 + \frac{.5(13.8 - 3.3)^2}{64.4} = 6.7 + 0.86$$

$7.5 \approx 7.56$ ok

Flow Depth will be 6.7' which is greater than 2.4' (critical Depth) ∴ SUBCRITICAL FLOW @ ③

NOTE: Depth OF BAFFLE @ ③ is 9'; ∴ OK!

BOHANNAN-HUSTON INC.

PROJECT NAME _____ SHEET 2 OF 5

PROJECT NO. 9628/C BY HCS DATE 3/3/97

SUBJECT Flow Regime Check C=54" CH'D _____ DATE _____

MOMENTUM PROGRAM PC VERSION SEPTEMBER 1993

10' Wide Exit from 54" Pipe

Discharge= 218.7

POINT	DIST	ELEV	POINT	DIST	ELEV	POINT	DIST	ELEV
1	0.00	8.00	3	10.00	0.00			
2	0.00	0.00	4	10.00	8.00			

WSEL FT	DEPTH INC. FT	FLOW AREA SQ. FT.	FLOW VEL FPS	FROUDE NO.	E	M CU. FT.
0.10	0.1	1.0	218.70	121.9	742.8	1485.4
0.20	0.2	2.0	109.35	43.1	185.9	742.9
0.30	0.3	3.0	72.90	23.5	82.8	495.6
0.40	0.4	4.0	54.67	15.2	46.8	372.1
0.50	0.5	5.0	43.74	10.9	30.2	298.3
0.60	0.6	6.0	36.45	8.3	21.2	249.4
0.70	0.7	7.0	31.24	6.6	15.9	214.6
0.80	0.8	8.0	27.34	5.4	12.4	188.9
0.90	0.9	9.0	24.30	4.5	10.1	169.1
1.00	1.0	10.0	21.87	3.9	8.4	153.5
1.10	1.1	11.0	19.88	3.3	7.2	141.1
1.20	1.2	12.0	18.22	2.9	6.4	131.0
1.30	1.3	13.0	16.82	2.6	5.7	122.7
1.40	1.4	14.0	15.62	2.3	5.2	115.9
1.50	1.5	15.0	14.58	2.1	4.8	110.3
1.60	1.6	16.0	13.67	1.9	4.5	105.6
1.70	1.7	17.0	12.86	1.7	4.3	101.8
1.80	1.8	18.0	12.15	1.6	4.1	98.7
1.90	1.9	19.0	11.51	1.5	4.0	96.2
2.00	2.0	20.0	10.93	1.4	3.9	94.3
2.10	2.1	21.0	10.41	1.3	3.8	92.8
2.20	2.2	22.0	9.94	1.2	3.7	91.7
2.30	2.3	23.0	9.51	1.1	3.7	91.0
2.40	2.4	24.0	9.11	1.0	3.7	90.7
2.50	2.5	25.0	8.75	1.0	3.7	90.7
2.60	2.6	26.0	8.41	0.9	3.7	90.9
2.70	2.7	27.0	8.10	0.9	3.7	91.5
2.80	2.8	28.0	7.81	0.8	3.7	92.2
2.90	2.9	29.0	7.54	0.8	3.8	93.3
3.00	3.0	30.0	7.29	0.7	3.8	94.5
3.10	3.1	31.0	7.05	0.7	3.9	96.0

CRITICAL Depth

SUPER CRITICAL

SUB CRITICAL

3 of 5

WSEL FT	DEPTH INC. FT	FLOW AREA SQ. FT.	FLOW VEL FPS	FROUDE NO.	E CU. FT.	M
3.20	3.2	32.0	6.83	0.7	3.9	97.6
3.30	3.3	33.0	6.63	0.6	4.0	99.5
3.40	3.4	34.0	6.43	0.6	4.0	101.5
3.50	3.5	35.0	6.25	0.6	4.1	103.7
3.60	3.6	36.0	6.08	0.6	4.2	106.1
3.70	3.7	37.0	5.91	0.5	4.2	108.6
3.80	3.8	38.0	5.76	0.5	4.3	111.3
3.90	3.9	39.0	5.61	0.5	4.4	114.1
4.00	4.0	40.0	5.47	0.5	4.5	117.1
4.10	4.1	41.0	5.33	0.5	4.5	120.3
4.20	4.2	42.0	5.21	0.4	4.6	123.6
4.30	4.3	43.0	5.09	0.4	4.7	127.0
4.40	4.4	44.0	4.97	0.4	4.8	130.6
4.50	4.5	45.0	4.86	0.4	4.9	134.3
4.60	4.6	46.0	4.75	0.4	5.0	138.1
4.70	4.7	47.0	4.65	0.4	5.0	142.1
4.80	4.8	48.0	4.56	0.4	5.1	146.1
4.90	4.9	49.0	4.46	0.4	5.2	150.4
5.00	5.0	50.0	4.37	0.3	5.3	154.7
5.10	5.1	51.0	4.29	0.3	5.4	159.2
5.20	5.2	52.0	4.21	0.3	5.5	163.8
5.30	5.3	53.0	4.13	0.3	5.6	168.5
5.40	5.4	54.0	4.05	0.3	5.7	173.3
5.50	5.5	55.0	3.98	0.3	5.7	178.3
5.60	5.6	56.0	3.91	0.3	5.8	183.3
5.70	5.7	57.0	3.84	0.3	5.9	188.5
5.80	5.8	58.0	3.77	0.3	6.0	193.8
5.90	5.9	59.0	3.71	0.3	6.1	199.2
6.00	6.0	60.0	3.65	0.3	6.2	204.8
6.10	6.1	61.0	3.59	0.3	6.3	210.4
6.20	6.2	62.0	3.53	0.2	6.4	216.2
6.30	6.3	63.0	3.47	0.2	6.5	222.0
6.40	6.4	64.0	3.42	0.2	6.6	228.0
6.50	6.5	65.0	3.36	0.2	6.7	234.1
6.60	6.6	66.0	3.31	0.2	6.8	240.3
6.70	6.7	67.0	3.26	0.2	6.9	246.6
6.80	6.8	68.0	3.22	0.2	7.0	253.0
6.90	6.9	69.0	3.17	0.2	7.1	259.6
7.00	7.0	70.0	3.12	0.2	7.2	266.2
7.10	7.1	71.0	3.08	0.2	7.2	273.0

ACTUAL Depth → 6.70

> CRITICAL Depth

∴ SUBCRITICAL

7.20	7.2	72.0	3.04	0.2	7.3	279.8
7.30	7.3	73.0	3.00	0.2	7.4	286.8
7.40	7.4	74.0	2.96	0.2	7.5	293.9
7.50	7.5	75.0	2.92	0.2	7.6	301.1
7.60	7.6	76.0	2.88	0.2	7.7	308.3
7.70	7.7	77.0	2.84	0.2	7.8	315.7
7.80	7.8	78.0	2.80	0.2	7.9	323.2
7.90	7.9	79.0	2.77	0.2	8.0	330.9
8.00	8.0	80.0	2.73	0.2	8.1	338.6

APPENDIX F

AMAFCA SOUTH DIVERSION CHANNEL

RIGHT-OF-WAY AGREEMENT AND

REVERSIONARY EASEMENT GRANT

A G R E E M E N T

THIS AGREEMENT, entered into this 28th day of May, 1969, by and between the REGENTS OF THE UNIVERSITY OF NEW MEXICO, hereinafter called "University", and the ALBUQUERQUE METROPOLITAN ARROYO FLOOD CONTROL AUTHORITY, hereinafter called the "Authority",

W I T N E S S E T H :

WHEREAS, the Authority has been requested by the City of Albuquerque to extend, and lower the invert of, its proposed South Diversion Channel in the vicinity of Stadium Boulevard so as to intercept and divert additional storm waters, and

WHEREAS, such extension and lowering would permit more adequate drainage of lands of the University of New Mexico and the Albuquerque Public School System, as well as of private owners, and would require a relocation of the South Diversion Channel right-of-way westerly of its present surveyed location, and

WHEREAS, the University finds it necessary and desirable to acquire certain lands in the vicinity of its South

Campus, some of which are owned by the Authority and will be excess to its needs by reason of such relocation, and

WHEREAS, the Parties are desirous of cooperating in such relocation and land acquisition program, and

WHEREAS, authority to enter into agreements of this nature is conferred upon the Parties by the Arroyo Flood Control Act.

NOW, THEREFORE, in consideration of the promises hereinafter contained, BE IT AGREED:

1. The Authority shall acquire all privately owned lands located within the area bounded on the North by lands of Albuquerque Public School System, on the South by Stadium Boulevard, on the East by the centerline of Locust Street and on the West by lands of the New Mexico Highway Commission. Upon completing such acquisition, the Authority, in cooperation with the University, shall cause all streets and alleys within such area to be vacated. The Authority shall thereupon convey to the University the resulting unplatted lands so acquired in exchange for conveyance to the Authority of the right-of-way required by the Authority for

its South Diversion Channel extension from Stadium Boulevard to the lands of Albuquerque Public School System. The cost to the Authority of acquiring such privately held lands shall be divided by the total square feet of lands so to be conveyed to the University to establish a cost per square foot of the lands each party is to convey to the other, and whichever party receives more square feet of land than the other shall pay to the other an amount equal to such cost per square foot multiplied by such difference in square feet so received.

2. The Authority shall acquire all lands of Phillips Petroleum Company located east of the west right-of-way line of the South Diversion Channel as the same is to be relocated, and shall convey to the University all parts thereof lying east of the east right-of-way line of the South Diversion Channel as to be relocated, including that portion thereof heretofore acquired. University shall pay that percentage of the total acquisition cost of the Authority as is equal to the percentage of land so conveyed to the University out of the lands so acquired by the Authority from Phillips Petroleum Company. Prior to making

any offer to Phillips Petroleum Company, the Executive Engineer of the Authority shall advise the Vice President, Finance of the University in writing of the amount of such intended offer, and the basis for making such offer. The Vice President, Finance of the University shall thereupon approve or reject such proposed amount and, in the event of rejection shall state the amount per acre or per square foot the Authority should offer for such lands, and his reasons therefor. In the event the amount of such offer is not satisfactory to such owner, the Authority shall institute eminent domain proceedings for the acquisition of such lands. That party hereto which sets the amount to be offered to the owner shall at its expense provide the expert valuation witnesses required for the purposes of trial.

3. The Authority is acquiring all other privately held lands located south of the Phillips Petroleum land, north of Parcel S-14-3a, east of its South Diversion Channel right-of-way, as to be relocated, and west of other lands of the University. The Authority shall cause all streets and alleys located in such area to be vacated upon completion of

acquisition, and shall thereupon convey to the University the resulting unplatted lands, in exchange for conveyance to the Authority by the University of Parcel S-14-3a. The cost to the Authority of acquiring such privately held lands shall be divided by the total square feet of lands so to be conveyed to the University to establish a cost per square foot of the lands which each party is to convey to the other, and whichever party receives more land than the other shall pay to the other an amount equal to such cost per square foot multiplied by the difference in square feet so received.

4. The cost of acquisition to be used for the purposes of the above computations shall be the purchase price paid or just compensation awarded for the land acquired, including the amounts necessary to satisfy taxes, assessments and liens, interest on any such award, and title insurance premiums. All conveyances shall be of merchantable title, free and clear of all encumbrances except the usual patent reservations and zoning regulations. Each Party, when acting as grantee from the other, shall pay

for its own title insurance premiums.

IN WITNESS WHEREOF, the Parties hereto have caused their names to be signed this 6th day of June, 1969.

REGENTS OF THE UNIVERSITY OF NEW MEXICO

By _____
President

ALBUQUERQUE METROPOLITAN ARROYO FLOOD CONTROL AUTHORITY

By _____
Chairman of the Board of Directors

ATTEST:

_____
Secretary

July 21, 1971

Mr. E. H. Blumenthal, Jr.
Office of the University Architect
University of New Mexico
Post Office Box 18, University Station
Albuquerque, New Mexico 87106

Dear Mr. Blumenthal:

I am forwarding herewith for your review and delivery to Mr. John Perovich, certain deeds, easements and an area sketch concerned with land on the South Diversion Channel. Reference is made to the Agreement made May 28, 1969 between Regents of the University of New Mexico and the Albuquerque Metropolitan Arroyo Flood Control Authority. Specifically, the following documents are enclosed:

1. Executed Quitclaim Deeds from the Authority to the University of New Mexico covering parcels identified as Ames Parcels, S-14-2-2, S-14-X and S-14-8X-2. These deeds cover the fee simple transfer to the University of a total of 6.929 acres.

2. Unexecuted Quitclaim Deeds from the University of New Mexico to the Authority for fee simple transfer to the Authority of Parcels identified as S-15 and S-14-3A-1. These deeds cover an area of 3.957 acres.

3. Two Reversionary Easements covering a parcel of land between Stadium Boulevard and Sunshine Terrace on the east side of the South Diversion Channel and a parcel of land north of Stadium Boulevard adjacent to and surrounding Parcel S-15. These Easements employ language furnished by my letter of April 23, 1971, which was subsequently reviewed and approved by the University.

4. A sketch prepared by Walsh and Company, the Authority's right-of-way engineers, depicting the parcels covered in sub-paragraphs 1, 2 and 3 above.

It will be noted that the Authority is transferring a net of 2.972 acres to the University over and above that area being transferred from the University to the Authority. I have computed the average costs of land purchased by the Authority in the area extending from Sunshine Terrace northward to and including Ames Addition. In making the calculation for the average price paid, I have excluded that land which was purchased from Phillips Petroleum Company. There is a total of 6.732 acres for a total cost of $63,000.00, or $9,358.00 per acre. Accordingly, the terms of the Agreement would provide for the University to reimburse the Authority for 2.972 acres at $9,358.00 per acre, or $27,812.00. The signed deeds which are enclosed are therefore being tendered subject to payment by the University.

The Agreement also provided for assistance by the Authority in obtaining street vacations within the areas being transferred to the University. I will take steps this week to initiate such vacation action with the appropriate Authorities of the City of Albuquerque.

I trust the foregoing will serve to answer any question you may have regarding these transactions. I stand ready to supply any additional information you may desire.

Very sincerely yours,

Frank Busman
General Manager

FB/jso

Enclosures as indicated

7473.1

441

GRANT OF REVERSIONARY DRAINAGE EASEMENT
AROUND PARCEL S-15

The Regents of the University of New Mexico, for and in consideration of Ten Dollars ($10.00) and other valuable consideration in hand paid, do hereby grant and convey unto the Albuquerque Metropolitan Arroyo Flood Control Authority, a political sub-division of the State of New Mexico, an Easement for the construction and maintenance of temporary drainage structures, such as collector ditches, which Easement shall terminate upon the construction of permanent substitute drainage facilities. It is understood that such substitute facilities may consist of paved streets, curbs and gutters and that the design for such substitute facilities shall be submitted to the Grantee for review prior to construction.

Such Easement is granted upon and within the following described real estate:

A certain parcel of land situate in Section 28, Township 10 North, Range 3 East, New Mexico Principal Meridian, within the City Limits of the City of Albuquerque, Bernalillo County, New Mexico, which is more particularly described by metes and bounds as follows:

Beginning at the southeast corner of the parcel herein described, a Point on Curve on the northerly Right-of-Way Line of Stadium Boulevard, S.E., whence the northeast corner on the Hope & Venable Addition, filed in the office of the County Clerk of Bernalillo County, New Mexico on April 20, 1916 bears S 31° 14' 42" W, 660.74 feet distance; thence,

Northwesterly, 100.88 feet distance along the northerly Right-of-Way Line of Stadium Boulevard, S.E. along the arc of a curve bearing to the left (said arc having a radius of 871.51 feet and a chord which bears N 69° 02' 33' W, 100.82 feet distance) to a Point on Curve; thence,

N 12° 21' 34" E, 21.57 feet distance to a point; thence

N 13° 50' 26" E, 11.78 feet distance to a Point of Curvature; thence,

Northeasterly, 85.44 feet distance along the arc of a curve bearing to the left (said arc having a radius of 344.86 feet and a long chord which bears N 06° 31' 51" E, 85.21 feet distance) to a Point of Tangency; thence,

North of Stadium

N 00° 46' 41" W, 994.27 feet distance to a point; thence,

S 89° 15' 51" W, 47.72 feet distance to AMAFCA South Diversion Channel centerline station 396+30.00; thence,

S 89° 15' 51" W, 47.72 feet distance to a point; thence,

S 00° 41' 37" E, 994.40 feet distance to a Point of Curvature; thence,

Southwesterly, 60.84 feet distance along the arc of a curve bearing to the right (said arc having a radius of 236.57 feet and a long chord which bears S 06° 40' 26" W, 60.67 feet distance) to a Point of Tangency; thence,

S 14° 02' 29" W, 11.41 feet distance to a point; thence,

S 15° 31' 22" W, 20.77 feet distance to a Point on Curve on the northerly Right-of-Way Line of Stadium Boulevard, S.E.: thence,

Northwesterly, 13.79 feet distance along the northerly Right-of-Way Line of Stadium Boulevard, S.E. along the arc of a curve bearing to the left (said arc having a radius of 871.51 feet and a chord which bears N 79° 16' 27" w, 13.79 feet distance) to a Point on Curve; thence,

N 00° 41' 37" W, 860.97 feet distance to a point; thence,

S 89° 18' 23" W, 30.00 feet distance to a point; thence,

N 00° 41' 37" W, 260.00 feet distance to the northwest corner of the parcel herein described; thence,

N 89° 15' 51" E, 107.71 feet distance to AMAFCA South Diversion Channel centerline station 396+68.19; thence,

N 89° 15' 51" E, 112.70 feet distance to the northeast corner of the parcel herein described; thence,

S 00° 46' 41" E, 197.54 feet distance to a point; thence,

S 29° 13' 19" W, 70.00 feet distance to a point; thence,

S 00° 46' 41" E, 850.68 feet distance to a point; thence,

S 30° 46' 41" E, 89.88 feet distance to the southeast corner and place of beginning of the parcel herein described, a Point on Curve on the northerly Right-of-Way Line of Stadium Boulevard, S.E., and containing 2.056 acres, more or less.

Dated this 8th day of February, 1972

UNIVERSITY OF NEW MEXICO

Attest:

Cyrene F. Mapel
Secretary-Treasurer

Calvin P. Horn
President

ACKNOWLEDGMENT

STATE OF NEW MEXICO)
) SS
COUNTY OF BERNALILLO)

The foregoing instrument was acknowledged before me this 8th day of February, 1972, by Calvin P. Horn.

Teresa L. Manos

My commission expires: July 19, 1972

(Seal)

State of New Mexico
County of Bernalillo } SS
This instrument was filed for record on
MAR 9 1972
At 3:12 o'clock P.M. Recorded in Vol. 251
of records of said County Folio 441-443.
Clerk & Recorder
Deputy Clerk

943

74732

QUITCLAIM DEED

REGENTS OF THE UNIVERSITY OF NEW MEXICO

for consideration paid, quitclaim to

ALBUQUERQUE METROPOLITAN ARROYO FLOOD CONTROL AUTHORITY, a quasi-municipal corporation and a political sub-division of the State

the following described real estate in Bernalillo County, New Mexico:

PARCEL S-15

A certain parcel of land situate in Section 28, Township 10 North, Range 3 East, New Mexico Principal Meridian within the City Limits of the City of Albuquerque, Bernalillo County, New Mexico; which is more particularly described by metes and bounds as follows:

Beginning at the southeast corner of the parcel herein described, a Point on Curve on the northerly Right-of-Way Line of Stadium Boulevard, S.E., whence the northeast corner of the Hope & Venable Addition, filed in the office of the County Clerk of Bernalillo County, New Mexico on April 20, 1916 bears S 22° 28' 15" W, 650.35 feet distance; thence,

Northwesterly, 49.15 feet distance along the northerly Right-of-Way Line of Stadium Boulevard, S.E. along the arc of a curve bearing to the left (said arc having a radius of 871.51 feet and a chord which bears N 73° 58' 27" w, 49.14 feet distance) to a Point on Curve at AMAFCA South Diversion Channel centerline station 385+31.17; thence,

Northwesterly, 49.15 feet distance continuing along the northerly Right-of-Way Line of Stadium Boulevard, S.E. continuing along the arc of a curve bearing to the left (said arc having a radius of 871.51 feet and a chord which bears N 77° 12' 20" W, 49.14 feet distance) to Point on Curve at the southwesterly corner of the parcel herein described; thence,

N 15° 31' 22" E, 20.77 feet distance to a point; thence,

N 14° 02' 29" E, 11.41 feet distance to a Point of Curvature; thence,

Northeasterly, 60.84 feet distance along the arc of a curve bearing to the left (said arc having a radius of 236.57 feet and a long chord which bears N 06° 40' 26" e, 60.67 feet distance, to a Point of Tangency; thence,

N 00° 41' 37" W, 994.40 feet distance to the northwest corner of the parcel herein described; thence,

WITNESS our hand S and seal S this 8th day of February, 1972

Cyrene F. Mapel (Seal) — Cyrene F. Mapel, Secretary-Treasurer

Calvin P. Horn (Seal) — Calvin P. Horn, President

(Seal) (Seal)

ACKNOWLEDGMENT FOR NATURAL PERSONS

STATE OF NEW MEXICO
COUNTY OF ..... } ss.

The foregoing instrument was acknowledged before me this ..... day of ....., 19....,

by .....
(Name or Names of Person or Persons Acknowledging)

My commission expires:
(Seal)

Notary Public

FOR RECORDER'S USE ONLY

State of New Mexico
County of Bernalillo } SS
This instrument was filed for record on
MAR 9 1972
At 3:12 o'clock pm. Recorded in Vol. D 943
of records of said County Folio 943-943A
Clerk & Recorder
Deputy Clerk

ACKNOWLEDGMENT FOR CORPORATION

STATE OF NEW MEXICO
COUNTY OF Bernalillo } ss.

The foregoing instrument was acknowledged before me this 8th day of February, 1972,

by Calvin P. Horn,
(Name of Officer)

President of the Regents of the University of New Mexico
(Title of Officer) (Name of Corporation Acknowledging)

a New Mexico corporation, on behalf of said corporation.
(State of Incorporation)

My commission expires:
July 19, 1972
(Seal)

Eleanor L. Mason
Notary Public

North Stadium

N 89° 15' 51" E, 47.72 feet distance to AMAFCA South Diversion Channel Centerline Station 396+30.00; thence,

N 89° 15' 51" E, 47.72 feet distance to the northeast corner of the parcel herein described; thence,

S 00° 46' 41" E, 994.27 feet distance to a Point of Curvature; thence,

Southwesterly, 85.44 feet distance along the arc of a curve bearing to the right (said arc having a radius of 334.86 feet and a long chord which bears S 06° 31' 53" W, 85.21 feet distance) to a Point of Tangency; thence,

S 13° 50' 26" W, 11.78 feet distance to a point; thence,

S 12° 21' 34" W, 21.57 feet distance to the southeast corner and place of beginning of the parcel herein described, a point on curve on the northerly Right-of-Way Line of Stadium Boulevard, S.E., and containing 2.439 acres, more or less.

A

BOHANNAN HUSTON

Courtyard One

7500 JEFFERSON NE

Albuquerque

NEW MEXICO 87109

voice 505.823.1000

fax 505.821.0892

July 18, 1997

Courtyard One

7500 JEFFERSON NE

Albuquerque

NEW MEXICO 87109

voice 505.823.1000

fax 505.821.0892

Carlos Montoya, P.E.
City of Albuquerque
Public Works Department
P.O. Box 1293
Albuquerque, NM 87103

L15/D31E

Re: Drainage Report for the Science & Technology Park at the University of New Mexico-dated April 1997
Revised July 1997

Dear Mr. Montoya:

We have incorporated your comments into the plan and are concurrently submitting the report to Albuquerque Metropolitan Arroyo Flood Control Authority (AMAFCA) for subsequent submittal to the Corps of Engineers. Attached is one copy of the revised plan for your review. Listed below are itemized responses to your comments of May 27, 1997:

1. We have included the lot lines for the current platting on the drainage basin map. This plat is currently in the DRB process.

2. There is historic flows entering the South Diversion Channel (SDC) from the APS property to the North. This is overland flow. The parallel interceptor ditch immediately east of the AMAFCA will be regraded if needed. UNM and APS are fully aware of this flow condition.

3. Conceptual spot elevations have been added on the drainage basin map as requested.

4. We acknowledge that temporary drainage improvements will be necessary.

5. We did include a doubling factor in our design. There are two inlets on each side of the street. Each eastern inlet will receive (17.1+7.0)/2=12.1 cfs. Doubling the flows getting to each inlet (for clogging) would require each inlet to convey 24.1 cfs. The capacity shown on the inlet capacity in Appendix "B" is 25.0 cfs at a water depth of 0.7ft. The average water depth over the top of a type inlet is 11 & 7/8" from the top of the curb to the middle of the grate, based on City of Albuquerque Standard Drawing 2202. This is the worse case location.

6. The inlet capacities/interception rates shown in the table in Appendix "B" are from DPM Plates 22.3 D-1 Capacities/Interception rates for inlets in sump conditions were obtained from the Federal Highway Administration (FHWA) HEC-12 charts. These charts are included in Appendix @. We have included combined allowances for grate and slot interceptions for those inlets in sump conditions.

7. I do not have access to the original report to recopy from a better original source.

8. HEC-2 sections have been added to Figure 1.5 on page 16. This is the Drainage Basin Map.

Please call me if you have any questions.

Sincerely,
Bohannan Huston

Ted Green, P.E.
Project Manager
Traffic & Transportation Group

TG/dc
Enclosure

JUL 18 1997
HYDROLOGY SECTION

LARRY W HUSTON, C.P.
MICHIAL M. EMERY, PE.
BRIAN G BURNETT, PE.
KERRY L. DAVIS, PE
LARRY A LARRAÑAGA, PE.
HOWARD C STONE, PE.

PRINCIPALS

WILLIAM L. VREEKE, PE.
GORDON A WALHOOD, JR., PE.
MARY E. CARTER
GEORGE RADNOVICH, R L A
SILAS V SUAZO
JAMES R. TOPMILLER, PE.

BOHANNAN-HUSTON INC.

COURTYARD I, 7500 JEFFERSON STREET, N.E. ALBUQUERQUE, NM 87109
TEL (505) 823-1000 FAX (505) 821-0892

January 29, 1997

Larry A. Blair, P.E.
Executive Engineer
Albuquerque Metropolitan Arroyo
Flood Control Authority
2600 Prospect NE
Albuquerque, NM 87107

Re: South Division Channel at the Science & Technology Park at UNM

Dear Larry:

We are resubmitting the drainage report for The Science & Technology Park at UNM for your review and input. We have incorporated the comments we received from AMAFCA on our initial drainage report submitted late last year. We will be concurrently submitting the report to the City of Albuquerque Drainage Department for review and comment.

A. **Penetrations of the South Diversion Channel**- The overall drainage plan has changed slightly from that depicted in the previous submittal. It is proposed that the South Diversion Channel (SDC) be penetrated at three locations with storm drains. All flows on Langham/Basehart north of Goddard is proposed to be conveyed by a storm drain to the first location at the existing concrete baffle chute. The second location outfall flows to a proposed 12' x 12' concrete box culvert (CBC) crossing structure at the crossing of Goddard and the SDC. This connection will be made with a 24" RCP penetration in the new CBC side wall. Runoff from Langham, south of Goddard Road, will be picked up by inlets immediately north of Stadium Boulevard on Langham Drive and conveyed to the SDC by a storm drain terminating at a third location with concrete end blankets that conform to the slope of the channel.

B. **HEC-2 Analysis** - As noted above, a crossing of the SDC at Goddard Road is being proposed. The crossing structure consists of a 12' x 12' single barrel concrete box culvert with concrete wing walls per NMSH&TD design specifications (see the drainage report for more discussion regarding this structure). The remainder of the crossing is curb & gutter, asphalt pavement, 6' sidewalk on one side, and concrete wall barrier on the other side.

   This crossing is being bid as an additive alternate to the construction project and begins at station 48+00 Goddard Road and ends at the west curb returns of the Goddard Road/Langham Drive intersection at station 49+45.33. The intersection improvements will be terminated at Station 49+45.33 and the storm drain outfall pipe from the Goddard Road/Langham Drive intersection will be terminated at the SDC with a concrete end blanket if the additive alternate is not selected to be built with this project.

   The SDC was analyzed utilizing HEC-2 analysis prepared for the recently constructed Stadium Boulevard Storm drain project. The area of additional analysis extends approximately 1,000 ft. north of Stadium Boulevard. A flow rate of 800 cfs was utilized for the 100-yr. event. Existing mapping was utilized for the channel section and invert slopes. A 12' x 12' CBC was analyzed at the proposed crossing structure of the SDC at Goddard Road.

The resultant Hydraulic Grade Live (HGL) from the HEC-2 run was used to calculate HGL's in the storm drain system discharging into the SDC at the three penetration locations. The HEC-2 run is included in the report for your reference. It is important to highlight that the HEC-2 analysis indicated that the existing SDC does not have the three feet of required freeboard from the top of the 100-yr. water surface elevation to the top of the channel berms.. Instead, a 2 foot freeboard exists in the field.

C. **Roadway Fill in Bar Ditch** - Another area impacting the SDC is the roadway side slope that will partially fill the bar ditch immediately east of the channel. This is required to establish the necessary roadway grades adjacent to the SDC and at the Goddard/Langham Drive intersection. The HEC-2 run indicates that the 100-yr. storm and the COE SPF of 1,000 cfs will not top the berm. Flows within the regraded bar ditch will be directed toward the existing concrete baffle chute as in the existing condition. A 24" CMP will be built to convey these flows under the proposed Goddard Road crossing. This culvert will be parallel to the 12' x 12' CBC and be approximately 65' east of the CBC. A figure within the report illustrates the required bar ditch regrading.

D. **Crossing of AMAFCA Easement with Langham Drive**- A portion of the proposed Langham Drive Intersection with Stadium Boulevard crosses a 30' existing AMAFCA easement. A drawing that shows the impacted area (approximately 0.046 acres) is included with this letter. We would like to meet with you to discuss how this proposed encroachment should be handled.

In summary, we request that AMAFCA begin the review process of this proposal with the Corps of Engineers. In the near future we would also like to meet with you to discuss the report, easement encroachment, and the approval process schedule.

Thank you for your assistance on this matter. John and Kurt have been very helpful. We look forward to hearing from you.

Please call me if you have any questions.

Sincerely,

Brian G. Burnett, P.E.
Senior Vice President
Traffic & Transportation Group

BGB/dc
Enclosure

cc: Roger Lujan - UNM (with report)
Kim Murphy - UNM (without report)
Chuck Wellborn - UNM (without report)
Fred Aguirre, P.E. - City of Albuquerque (with report)

Bohannan ▲ Huston

FACSIMILE TRANSMITTAL COVER SHEET

BOHANNAN HUSTON
Courtyard One
7500 JEFFERSON NE
Albuquerque
NEW MEXICO 87109
voice 505.823.1000
fax 505.821.0892

Date: September 25, 1997

To: Lisa Manwill

Company: City Of Albuquerque-Public Works

Fax No.: 924-3864

From: Ted Green

Job Name and No.: 96281C 04 2200

Number of Pages to follow (including cover) 4

RE : Science & Technology Park at UNM-Drainage Report

Comments:

Lisa, here is copy of the letter I sent to Carlos. This is a reprint, so the date is off. Thanks for your help!

Original to Follow: ☐ **Yes**

If you do not receive all pages, please contact _____ at 823-1000

September 25, 1997

Carlos Montoya, P.E.
City of Albuquerque
Public Works Department
P.O. Box 1293
Albuquerque, NM 87103

Re: Drainage Report for the Science & Technology Park
at the University of New Mexico-dated April 1997
Revised July 1997

Dear Mr. Montoya:

We have incorporated your comments into the plan and are concurrently submitting the report to Albuquerque Metropolitan Arroyo Flood Control Authority (AMAFCA) for subsequent submittal to the Corps of Engineers. Attached is one copy of the revised plan for your review. Listed below are itemized responses to your comments of May 27, 1997:

1. We have included the lot lines for the current platting on the drainage basin map. This plat is currently in the DRB process.

2. There is historic flows entering the South Diversion Channel (SDC) from the APS property to the North. This is overland flow. The parallel interceptor ditch immediately east of the AMAFCA will be regraded if needed. UNM and APS are fully aware of this flow condition.

3. Conceptual spot elevations have been added on the drainage basin map as requested.

4. We acknowledge that temporary drainage improvements will be necessary.

5. We did include a doubling factor in our design. There are two inlets on each side of the street. Each eastern inlet will receive (17.1+7.0)/2=12.1 cfs. Doubling the flows getting to each inlet (for clogging) would require each inlet to convey 24.1 cfs. The capacity shown on the inlet capacity in Appendix "B" is 25.0 cfs at a water depth of 0.7ft. The average water depth over the top of a type inlet is 11 & 7/8" from the top of the curb to the middle of the grate, based on City of Albuquerque Standard Drawing 2202. This is the worse case location.

6. The inlet capacities/interception rates shown in the table in Appendix "B" are from DPM Plates 22.3 D-1 Capacities/Interception rates for inlets in sump conditions were obtained from the Federal Highway Administration (FHWA) HEC-12 charts. These charts are included in Appendix @. We have included combined allowances for grate and slot interceptions for those inlets in sump conditions.

7. I do not have access to the original report to recopy from a better original source.

8. HEC-2 sections have been added to Figure 1.5 on page 16. This is the Drainage Basin Map.

Please call me if you have any questions.

Sincerely,
Bohannan Huston

Ted Green, P.E.
Project Manager
Traffic & Transportation Group

TG/dc
Enclosure

CITY OF
Albuquerque

Public Works Department
May 27, 1997

Martin J. Chávez, Mayor

Robert E. Gurulé, Director

Ted Green
Bohannan-Huston Inc.
7500 Jefferson NE
Albuquerque New Mexico, 87109

RE: DRAINAGE REPORT FOR UNM SCIENCE &TECHNOLOGY PARK (L15-D31E) DATED APRIL 1997

Dear Mr. Green:

I have reviewed the referenced report and forward the following comments.

1. Please show the proposed basin map with the proposed platting. The platting sometimes has more effect on the direction of flow than the contours.

2. There appears to be flow entering the South Diversion Channel from the north (APS property). This flow enters over the South Diversion storm drain.

3. Please show the proposed conceptual spot elevations of the properties next to the proposed roads.

4. Please be advise that if the project is phased then temporary drainage improvement will be necessary.

5. The graph that was used on page 71 does not include clogging. Please address this issue.

6. Was the "C" & "A" inlet capacity taken from the DPM graphs?

7. Figure 2 subbasin map needs to be recopied.

8. Please show on plan view where the HEC-2 sections were taken.

If you have any questions please call me at 924-3984.

Carlos A. Montoya
Project Manager

DRAINAGE INFORMATION SHEET

PROJECT TITLE: UNM Science & Technology Park Roadways ZONE ATLAS/DRNG. FILE # L-15-Z/ D31E

DRB #: 94-74, 94-110, 94-351 EPC #:

LEGAL DESCRIPTION: Tract 1E1- & Tract 1E2-University Center

CITY ADDRESS:

ENGINEERING FIRM: BOHANNAN-HUSTON INC. CONTACT: Ted Green

ADDRESS: 7500 JEFFERSON NE, ALB. NM 87109 PHONE: (505) 823-1000

OWNER: CONTACT:

ADDRESS: PHONE:

ARCHITECT: CONTACT:

ADDRESS: PHONE:

SURVEYOR: CONTACT:

ADDRESS: PHONE:

CONTRACTOR: CONTACT:

ADDRESS: PHONE:

TYPE OF SUBMITTAL:

X DRAINAGE AGE REPORT
___ DRAINAGE PLAN
___ FINAL GRADING & DRAINAGE PLAN
___ GRADING PLAN
___ EROSION CONTROL PLAN
___ ENGINEER'S CERTIFICATION (Phase II)
___ OTHER

PRE-DESIGN MEETING:

___ YES
X NO
___ COPY PROVIDED

CHECK TYPE OF APPROVAL SOUGHT:

___ SKETCH PLAT APPROVAL
___ PRELIMINARY PLAT APPROVAL
___ S. DEV. PLAN FOR SUB'D. APPROVAL
___ S. DEV. PLAN FOR BLDG. PERMIT APPROVAL
___ SECTOR PLAN APPROVAL
___ FINAL PLAT APPROVAL
___ FOUNDATION PERMIT APPROVAL
___ BUILDING PERMIT APPROVAL
___ CERT OF OCCUPANCY APPROVAL (Permanent)
___ GRADING PERMIT APPROVAL
___ PAVING PERMIT APPROVAL
___ S.A.D. DRAINAGE REPORT
X DRAINAGE REQUIREMENTS
___ OTHER ___ (SPECIFY)

DATE SUBMITTED: April 14th, 1997

BY: Ted Green

RECEIVED APR 22 1997 HYDROLOGY

G:\UNMROADS\DRAINAGE INFO SHT.doc - 04/21/97

BOHANNAN-HUSTON INC.
ENGINEERS ▪ PLANNERS ▪ PHOTOGRAMMETRISTS ▪ SURVEYORS ▪ LANDSCAPE ARCHITECTS
COURTYARD I, 7500 JEFFERSON NE, ALBUQUERQUE, NM 87109 TEL (505) 823-1000 FAX (505) 821-0892

CLIENT/COURIER TRANSMITTAL

To: Fred Aguirre, P.E.
City Hydrologist
City of Albuquerque
Hydrology Division/PWD
600 2nd Street NW
2nd Floor

924-3980

Requested By: Ted Green

Date: April 11, 1997

Time Due: x This A.M. ☐ This P.M.
☐ Rush ___ ☐ By Tomorrow

Job No.: 96281 C2204

Job Name: UNM

DELIVERY VIA

x Courier Federal Express
Mail UPS
Other _____

PICK UP

Item: _____
_____
_____

ITEM NO.	QUANTITY	DESCRIPTION
1	1	UNM South Diversion Channel Report

COMMENTS / INSTRUCTIONS

Fred,

We are currently resubmitting the report to AMAFCA. Here is an undated copy for you. Revisions reflected in the report have been incorporated into the construction plans. We will resubmit to DRC soon.

Please call if you have any questions.

Thanks.

Ted

RECEIVED
APR 14 1997
HYDROLOGY SECTION

REC'D BY: _____ ***DATE:*** _____ ***TIME:*** _____

Andrew, this needs
an INFORMATION sheet.

Fred

3862

Called left Message 4-15-97
AJ

DRAINAGE INFORMATION SHEET

SDD

PROJECT TITLE: UNM Science & Technology Park Roadways ZONE ATLAS/DRNG. FILE # L-15-Z/D31

DRB #: 94-74, 94-110, 94-351 EPC #: _____ WORK ORDER #: _____

LEGAL DESCRIPTION: Tract 1E1 & Tract 1E2 - University Center

CITY ADDRESS: _____

ENGINEERING FIRM: BOHANNAN-HUSTON INC. CONTACT: _____

ADDRESS: 7500 JEFFERSON NE, ALB. NM 87109 PHONE: (505) 823-1000

OWNER: _____ CONTACT: _____

ADDRESS: _____ PHONE: _____

ARCHITECT: _____ CONTACT: _____

ADDRESS: _____ PHONE: _____

SURVEYOR: _____ CONTACT: _____

ADDRESS: _____ PHONE: _____

CONTRACTOR: _____ CONTACT: _____

ADDRESS: _____ PHONE: _____

TYPE OF SUBMITTAL:

X DRAINAGE REPORT
_____ DRAINAGE PLAN
_____ FINAL GRADING & DRAINAGE PLAN
_____ GRADING PLAN
_____ EROSION CONTROL PLAN
_____ ENGINEER'S CERTIFICATION
_____ OTHER

PRE-DESIGN MEETING:

_____ YES
X NO
_____ COPY PROVIDED

CHECK TYPE OF APPROVAL SOUGHT:

_____ SKETCH PLAT APPROVAL
_____ PRELIMINARY PLAT APPROVAL
_____ S. DEV. PLAN FOR SUB'D. APPROVAL
_____ S. DEV. PLAN FOR BLDG. PERMIT APPROVAL
_____ SECTOR PLAN APPROVAL
_____ FINAL PLAT APPROVAL
_____ FOUNDATION PERMIT APPROVAL
_____ BUILDING PERMIT APPROVAL
_____ CERTIFICATE OF OCCUPANCY APPROVAL
_____ GRADING PERMIT APPROVAL
_____ PAVING PERMIT APPROVAL
_____ S.A.D. DRAINAGE REPORT
X DRAINAGE REQUIREMENTS
_____ OTHER _____ (SPECIFY)

DATE SUBMITTED: October 15, 1996

BY: Alan R. Benham, Bohannan-Huston Inc.

F:\TRANS\96281\C2201\drainage_sht.doc - 10/15/96

CITY OF
Albuquerque
Public Works Department

February 5, 1997

Martin J. Chávez, Mayor

Robert E. Gurulé, Director

Brian Burnett, P.E.
Bohannan-Huston, Inc
7500 Jefferson NE
Albuquerque, NM 87109

RE: UNM SCIENCE AND TECHNOLOGY PARK ROADWAYS (L15-D31E. DRAINAGE REPORT SUBMITTAL.

Dear Mr. Burnett:

Based on the information provided on your January 31, 1997 submittal, City Hydrology is agreeable to your concept.

An agreement between the City and UNM regarding the public storm drain easement located within a private roadway must be made. The City would not be responsible for maintenance of inlets. Why aren't the roads public?

How much developed flow from the proposed project enters Stadium Blvd? Is there capacity?

AMAFCA's concurrence will be required prior to any City approvals.

If I can be of further assistance, please feel free to contact me at 924-3984.

Sincerely,

Lisa Ann Manwill
Engineering Assoc./Hyd.

c: Kurt Browning - AMAFCA
Andrew Garcia
File

DRAINAGE INFORMATION SHEET

PROJECT TITLE: UNM Science & Technology Park Roadways ZONE ATLAS/DRNG. FILE # L-15-Z

DRB #: 94-74, 94-110, 94-351 EPC #: _____

LEGAL DESCRIPTION: Tract 1E1- & Tract 1E2-University Center

CITY ADDRESS: _____

ENGINEERING FIRM: BOHANNAN-HUSTON INC. CONTACT: Ted Green

ADDRESS: 7500 JEFFERSON NE, ALB, NM 87109 PHONE: (505) 823-1000

OWNER: _____ CONTACT: _____

ADDRESS: _____ PHONE:

ARCHITECT: _____ CONTACT: _____

ADDRESS: _____ PHONE: _____

SURVEYOR: _____ CONTACT: _____

ADDRESS: _____ PHONE: _____

CONTRACTOR: _____ CONTACT: _____

ADDRESS: _____ PHONE: _____

TYPE OF SUBMITTAL:

- X DRAINAGE AGE REPORT
- ___ DRAINAGE PLAN
- ___ FINAL GRADING & DRAINAGE PLAN
- ___ GRADING PLAN
- ___ EROSION CONTROL PLAN
- ___ ENGINEER'S CERTIFICATION (Phase II)
- ___ OTHER

PRE-DESIGN MEETING:

- ___ YES
- X NO
- ___ COPY PROVIDED

CHECK TYPE OF APPROVAL SOUGHT:

- ___ SKETCH PLAT APPROVAL
- ___ PRELIMINARY PLAT APPROVAL
- ___ S. DEV. PLAN FOR SUB'D. APPROVAL
- ___ S. DEV. PLAN FOR BLDG. PERMIT APPROVAL
- ___ SECTOR PLAN APPROVAL
- ___ FINAL PLAT APPROVAL
- ___ FOUNDATION PERMIT APPROVAL
- ___ BUILDING PERMIT APPROVAL
- ___ CERT OF OCCUPANCY APPROVAL (Permanent)
- ✓ GRADING PERMIT APPROVAL
- ✓ PAVING PERMIT APPROVAL
- ___ S.A.D. DRAINAGE REPORT
- X DRAINAGE REQUIREMENTS
- ✓ OTHER WD (SPECIFY)

DATE SUBMITTED: August 26th, 1997

BY: Ted Green