City of Albuquerque
P.O. BOX 1293 ALBUQUERQUE, NEW MEXICO 87103

December 26, 1990

Dennis Lorenz, P.E.
Espey, Huston & Associates, Inc.
317 Commercial Street, NE
Albuquerque, New Mexico 87102

RE: DRAINAGE REPORT FOR MASTER PLAN OF MANZANO MESA, (L-21/D37), ENGINEER'S STAMP DATED DECEMBER 6, 1990

Dear Mr. Lorenz:

Based on the information provided on the referenced submittal received December 6, 1990, the drainage analysis is approved. The engineer's estimate lettered "A" & "B" is still under review by the City Hydrology Division Manager. Approval of the Engineer's Estimate is also required prior to Plat Approval.

Prior to Hydrology approving Preliminary Plat for DRB an approved infrastructure list must be executed.

Prior to Hydrology signing off on the Final Plat, a Subdivision Improvement Agreement with financial guarantees must be executed. Please be advised that per the Project Review Section Policies regarding financial guarantees, the following must be included:

1. Taxes of 5.75% for the infrastructure cost.

2. A contingency of 10%, since the design of the storm drain improvements are in a conceptual form.

3. Engineering fees of 8.6% in order to provide the surveying, inspection and testing for construction of the storm drain.

PUBLIC WORKS DEPARTMENT

Walter H. Nickerson, Jr., P.E.
Assistant Director Public Works

ENGINEERING GROUP

Telephone (505) 768-2500

AN EQUAL OPPORTUNITY EMPLOYER

4. The Subdivision Ordinance also requires that the financial guarantees be 125% of the construction cost, including items 1-3.

If you should have any questions, please don't hesitate to call me at 768-2650.

Cordially,

Gilbert Aldaz, P.E. & L.S.
C.E./Hydrology Section

xc: Dan Hogan, Hydrology Division Manager
Fred Aguirre, City Hydrologist
Roger Green, DRC Chairman

GA
(WP+1759)

[redacted]

ESPEY,
HUSTON &
ASSOCIATES, INC.
Engineering & Environmental Consultants

DRAINAGE MASTERPLAN
FOR
MANZANO MESA

L21) D37

PREPARED FOR:

ALBUQUERQUE PUBLIC SCHOOLS
P. O. BOX 25704
ALBUQUERQUE, NEW MEXICO 87125

RECEIVED
DEC 6 1990
HYDROLOGY DIVISION

DECEMBER 1990

DENNIS A. LORENZ
NEW MEXICO
8641
REGISTERED PROFESSIONAL ENGINEER
12-10-90

DRAINAGE INFORMATION SHEET

PROJECT TITLE: MANZANO MESA ZONE ATLAS/DRNG. FILE #: L21 / D37

DRB #: 89-0529 EPC #: Z-90-8 WORK ORDER #:

LEGAL DESCRIPTION: MANZANO MESA, TRACTS: 1A, 1B, 1C, 2A, 2B, 3A, 5A-C, 6-8, 9A-B, 10A-C

CITY ADDRESS: SOUTHERN AVE SE

ENGINEERING FIRM: ESPEY HUSTON & ASSOC CONTACT: J. LEYMON

ADDRESS: 317 COMMERCIAL NE PHONE: 2421909

OWNER: ALBQ PUBLIC SCHOOLS CONTACT: C. ATWOOD

ADDRESS: PO BOX 25704, 87125 PHONE: 765-5950

ARCHITECT: NA CONTACT:

ADDRESS: PHONE:

SURVEYOR: ESPEY HUSTON & ASSOC CONTACT: B. SEITZ

ADDRESS: SAME PHONE:

CONTRACTOR: NA CONTACT:

ADDRESS: PHONE:

TYPE OF SUBMITTAL:

X DRAINAGE REPORT
___ DRAINAGE PLAN
___ CONCEPTUAL GRADING & DRAINAGE PLAN
___ GRADING PLAN
___ EROSION CONTROL PLAN
___ ENGINEER'S CERTIFICATION
___ OTHER _____

PRE-DESIGN MEETING:

X YES
___ NO
X COPY PROVIDED

CHECK TYPE OF APPROVAL SOUGHT:

___ SKETCH PLAT APPROVAL
X PRELIMINARY PLAT APPROVAL
___ S. DEV. PLAN FOR SUB'D. APPROVAL
___ S. DEV. PLAN FOR BLDG. PERMIT APPROVAL
___ SECTOR PLAN APPROVAL
X FINAL PLAT APPROVAL
___ FOUNDATION PERMIT APPROVAL
___ BUILDING PERMIT APPROVAL
___ CERTIFICATE OF OCCUPANCY APPROVAL
___ GRADING PERMIT APPROVAL
___ PAVING PERMIT APPROVAL
___ S.A.D. DRAINAGE REPORT
___ DRAINAGE REQUIREMENTS
OTHER _____ (SPECIFY)

RECEIVED
DEC 6 1990
HYDROLOGY DIVISION

DATE SUBMITTED: 12-6-90

BY: D. LORENZ

11650

CITY OF ALBUQUERQUE
PUBLIC WORKS DEPARTMENT
UTILITY DEVELOPMENT DIVISION/HYDROLOGY SECTION

PRE-DESIGN CONFERENCE

DRAINAGE FILE/ZONE ATLAS PAGE NO.: L-21 DATE: April 20, 1989

EPC NO.: _____ DRB NO.: _____ ZONE: _____

SUBJECT: _____

STREET ADDRESS: _____

LEGAL DESCRIPTION: Manzano Mesa; Tracts 2A, 2B, 3A, 5A, 5B, 5C, 6, 7, 8, & 9B

APPROVAL REQUESTED:

X	PRELIMINARY PLAT		FINAL PLAT
	SITE DEVELOPMENT PLAN		BUILDING PERMIT
	GRADING/PAVING PERMIT		OTHER

	WHO	REPRESENTING
ATTENDANCE:	Dennis Lorenz	Espey, Huston & Assoc.
	Fred Aguirre	Hydrology Section/COA

FINDINGS:

1) An approved report is required for preliminary plat approval.

2) The major items of concern with this development is in the areas of downstream capacity and off-site flows.
Let me begin with the off-site flow problem. There is a significant amount of storm water entering this site from the east. These flows are programmed to be intercepted by project 2-07-1D. This project is a bond funded project which is scheduled to go before the voters in October of 1989.

3) Regarding the downstream capacity, the project identified in the AMDS (Project 2-03-1B) to correct this problem is not scheduled for action by the voters in the distant future. Hence, if development was to proceed in advance of this project being constructed, ponding would be the appropriate drainage scheme. The allowable release rate for this pond would be based on what downstream capacity exists as determined by the developers engineer.

The undersigned agrees that the above findings are summarized accurately and are only subject to change if further investigation reveals that they are not reasonable or that they are based on inaccurate information.

SIGNED:	Fred Aguirre	SIGNED:	Dennis C. Lorenz
TITLE:		TITLE:	SENIOR ENGINEER, EHA
DATE:	6/28/89	DATE:	6-29-89

NOTE PLEASE PROVIDE A COPY OF THIS PRE-DESIGN FORM WITH THE DRAINAGE SUBMITTAL.

TABLE OF CONTENTS

	PAGE
PURPOSE AND SCOPE	1
SITE LOCATION AND DESCRIPTION	1
EXISTING DRAINAGE CONDITIONS	3
PROPOSED DRAINAGE MASTERPLAN	5
EROSION CONTROL	9
INFRASTRUCTURE COST ESTIMATES	9
CONCLUSIONS & RECOMMENDATIONS	13
REFERENCES	14

LIST OF FIGURES AND EXHIBITS

VICINITY MAP - FIGURE 1	2
SOILS MAP - FIGURE 2	4
OFFSITE DRAINAGE BASINS - FIGURE 3	6
OFFSITE DRAINAGE BASINS - CENTRAL BASIN - FIGURE 4	7
EXISTING DRAINAGE CONDITIONS - PLATE I	Pocket
DRAINAGE MASTERPLAN - PLATE II	Pocket
DRAINAGE MASTERPLAN INFRASTRUCTURE - PLATE III	Pocket

PURPOSE AND SCOPE

The purpose of this Drainage Master Plan is to establish the criteria for controlling surface runoff from MANZANO MESA and contributing upstream areas in a manner which is acceptable to the City of Albuquerque and the Albuquerque Metropolitan Arroyo Flood Control Authority (AMAFCA). The plan studies the existing and developed conditions of MANZANO MESA and analyzes both conditions at the 100-year and 10-year/6-hour duration storm events. The Plan outlines general drainage management criteria for the ultimate development of MANZANO MESA.

The scope of this Plan is to ensure that the MANZANO MESA project will be protected from storm runoff and that the development of this project will not increase the flooding potential of adjacent and downstream properties.

Approval of this Drainage Masterplan shall facilitate Preliminary and Final Bulk Plat Approval. Future site specific platting and development will require detailed drainage reports that outline site specific drainage management criteria.

SITE LOCATION AND DESCRIPTION

The MANZANO MESA Plan area is located in southeast Albuquerque (see vicinity map, Figure 1). MANZANO MESA is bounded by Juan Tabo on the East; Opportunity Avenue, Shaw Mobile Home Park and Four Hills Mobile Home Park on the South; Eubank Boulevard on the West; and developed commercial properties on the North. The MANZANO MESA Plan area contains approximately 480 acres.

The plan area was originally masterplanned and annexed in the 1960's. Public rights-of-ways and recreation areas were dedicated to the City of Albuquerque. The recreation areas have been developed as baseball facilities, but other bulk parcels were not developed. As a result, the plan area is partially developed. Southern Boulevard crosses the northern 1/4 of the plan area which provides access between Eubank and Juan Tabo. The remaining public street right-of-ways exist in various conditions of improvement. No on-site drainage facilities were constructed to manage excess runoff.

The unimproved areas of the site are vegetated with typical native grasses and shrubs. The plant community covers approximately 15 percent of the topsoil surface. The dominant native grasses found on the site include:

black gramma	alkali sacaton
sand dropseed	bush muhly
spike dropseed	fluffgrass
mesa dropseed	galleta
blue gramma	Indian ricegrass

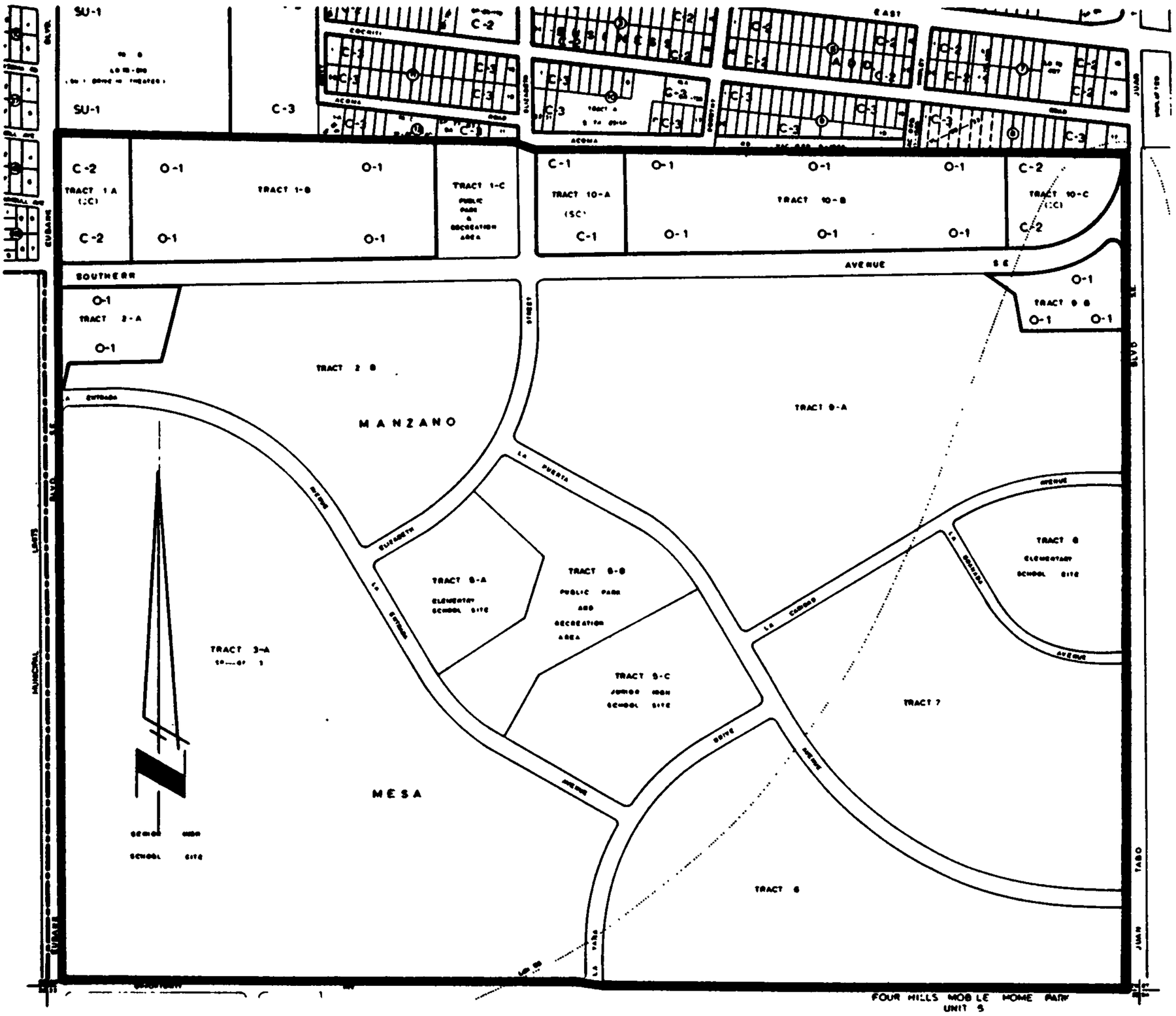

VICINITY MAP: L-21

SCALE: 1"= 800'±

The major types of shrubs indigenous to the area are:

fourwing saltbush	winterfat
wolfberry	Mormon tea
Apache-plume	chamisa

Site topography is relatively uniform with slopes typically 1.5% from east to west and less than 0.5% from north to south. Several drainage courses transverse the site from east to west, which convey excess runoff from off-site drainage basins located to the east. Portions of the site are impacted by the 100-year flood plain as shown on Plate I (see Pocket).

On-site soils consist mainly of Embudo, Tijeras, and Madurez-Wink soils, which are classified by the Soil Conservation Service as hydrologic group "A" soils. The soils units are described by SCS as follows:

EmB-Embudo gravelly fine sandy loam; 0-5% slopes. These are generally deep, well drained soils formed in alluvium derived from decomposed, coarse-grained granitic rocks. They exhibit medium runoff characteristics with moderate erosion.

TgB-Tijeras gravelly find sandy loam; 1-5% slopes. These are generally deep, well drained soils formed in decomposed granitic alluvium. Runoff and water erosion are moderate.

MWA-Madurez-Wink Association; gently sloping. This association includes Madurez fine sandy loam and Wink fine sandy loam formed in unconsolidated alluvium. Runoff is slow and soils exhibit moderate to severe wind erosion.

Figure 2 is provided to graphically illustrate the location of the various soils units within the plan area.

EXISTING DRAINAGE CONDITIONS

The plan area is presently encumbered by several flood hazard zones (see Plate I). These flood hazard zones are a result of offsite drainage basins discharging runoff into Juan Tabo Boulevard NE which overflows onto the site. Juan Tabo was constructed with sag points located at future street intersections platted per the original development masterplan. Since the platted streets were not constructed, no conveyance facilities exist to manage the offsite flows. The offsite flows are conveyed westward to Eubank by defined and undefined flowpaths. Again, as at Juan Tabo, Eubank has no drainage facilities, therefore, the flows top Eubank and continue westward.

Developed properties to the north drain northwesterly to the Central Avenue storm drain system. Properties to the south drain to the Tijeras Arroyo.

SOILS MAP **SCALE: 1"= 24,000'±**

Plate I is provided in the back pocket of this document and illustrates the existing conditions within the plan area. Figure 3 describes the offsite drainage basins that impact the plan area.

PROPOSED DRAINAGE MASTERPLAN

The intent of this Drainage Masterplan is to outline general drainage management criteria for MANZANO MESA in order to facilitate approval of a bulk land replat, and to provide a guideline for future development of the plan area. Drainage improvements recommended herein are masterplan infrastructure necessary to support the plan area. At the time of development of each tract or parcel within the plan area, the drainage criteria must be evaluated for compatibility with updated City of Albuquerque design criteria, development types, and improvements to downstream drainage conditions.

This site relys heavily upon City of Albuquerque masterplan drainage facilities yet to be constructed. The update to the AMDS identifies 3 systems that impact the site:

- AMDS Project 2-07-1D - a storm sewer project to be constructed within Juan Tabo. This project intercepts the 100-year runoff impacting the site from the offsite basins located to the east (see Figure 3). These flows are to be conveyed to the Tijeras Arroyo. This improvement will remove the 100-Year Flood Hazard Zones which presently encumber the site. The project is currently under construction.

- AMDS Project 2-03-1B - a storm sewer project to be constructed within Eubank Boulevard. This project is to divert excess flows from Central Avenue and collect runoff from the plan area and other offsite basins between Juan Tabo and Eubank. This project has been programmed for funding in 1995.

- AMDS Project 02-02-2B - a storm sewer project to be constructed within the Elizabeth Street to drain an existing depression to the Central Storm Sewer. This project has not been programmed and is not scheduled for design.

Since the Juan Tabo Storm Sewer is under construction, it is assumed to be in place for the purposes of establishing drainage criteria for this site. The existing flood hazard zones will be removed thereby removing flood plain easements from the property. However, the proposed bulk land replat of MANZANO MESA will be submitted before the completion of the Juan Tabo Storm Sewer Project and as such will grant the existing flood plains as easements. A formal request for a letter of map revision must be made to remove the flood hazard zones from the plan area. It is anticipated that this request will be made by the City after the construction of the Juan Tabo Storm Sewer (see Appendix).

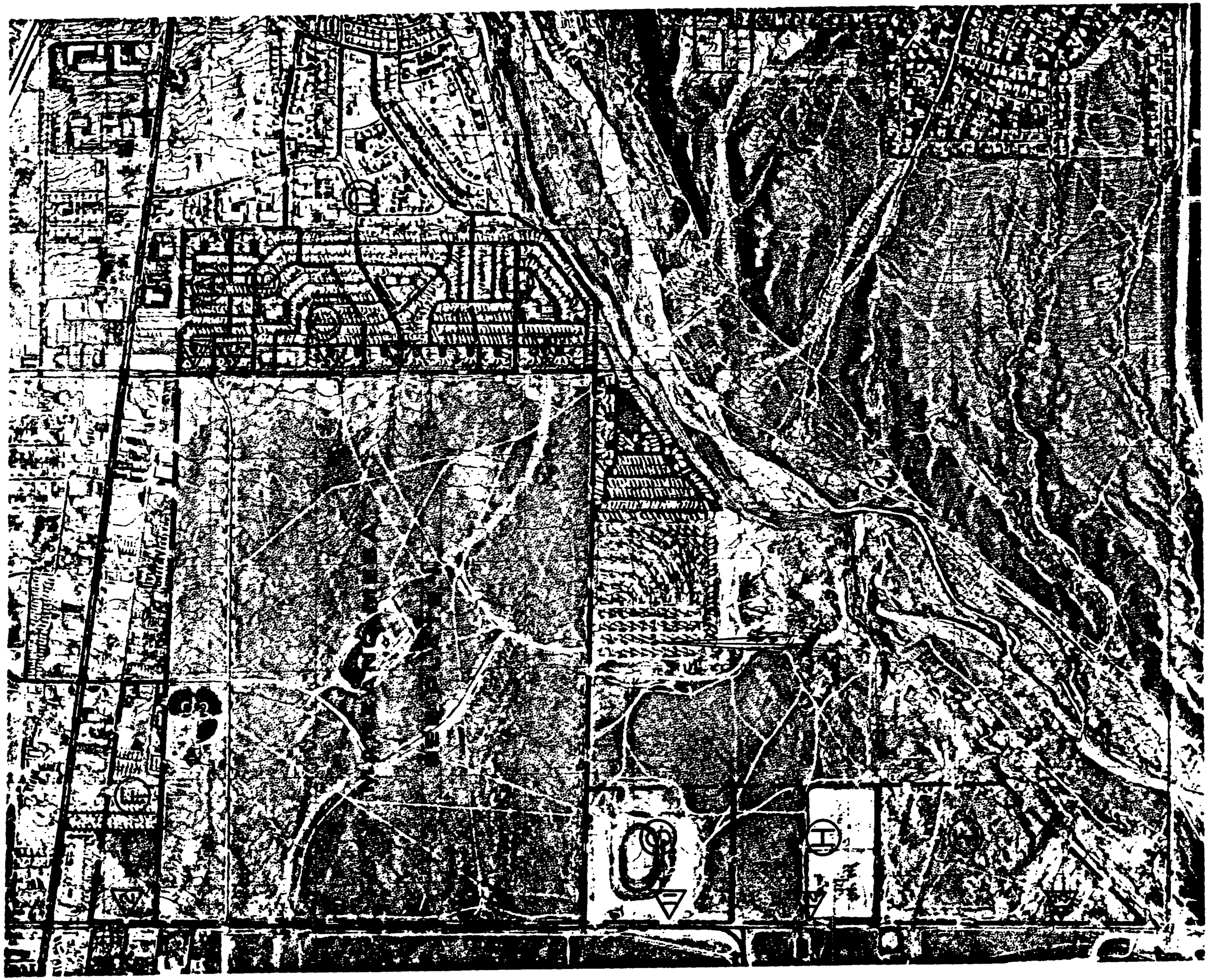

OFFSITE DRAINAGE BASINS

FIGURE 3

$L = 10{,}400$ feet

$$S = \frac{5467 - 5660}{10{,}400} = 0.0186$$

$$T_c = 0.0078 \frac{(10{,}400)^{0.77}}{(0.0186)^{0.385}} = 45 \text{ min}$$

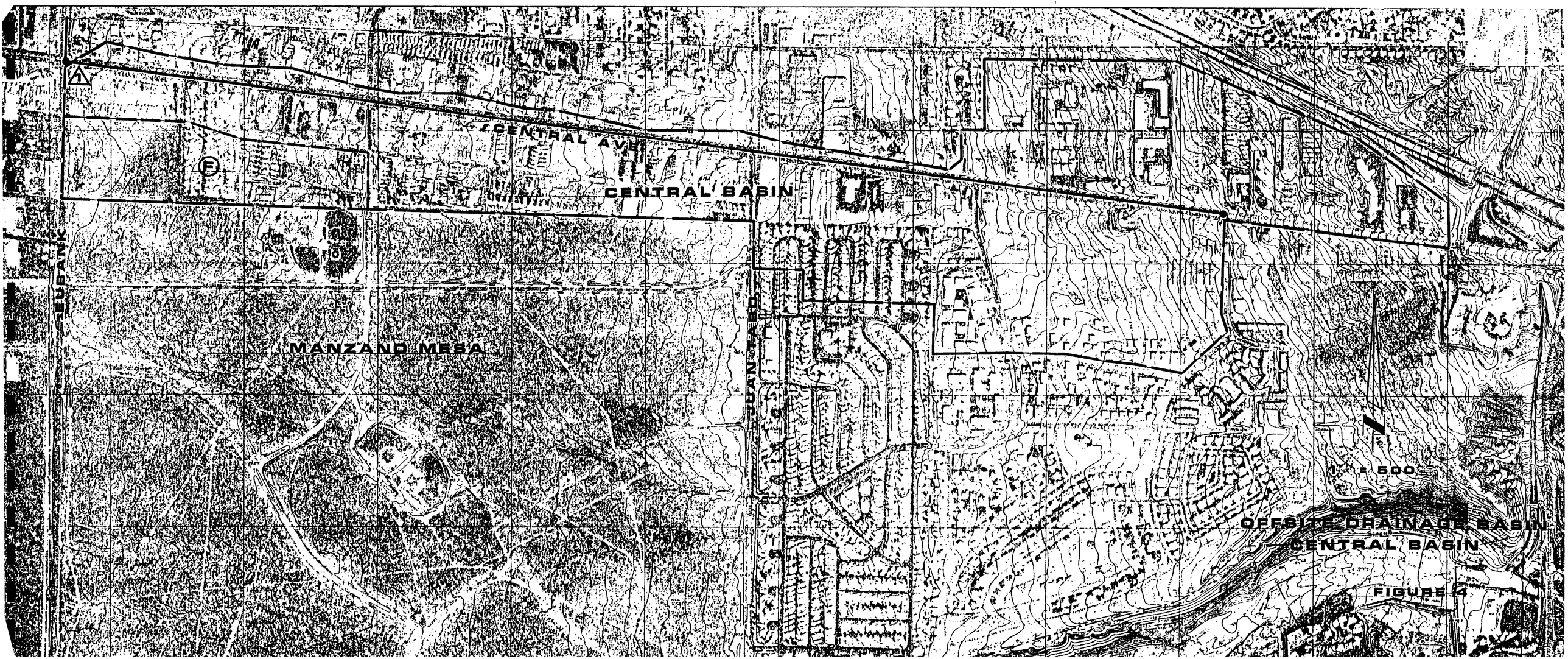
CENTRAL AVE
CENTRAL BASIN
MANZANO MESA
JUAN TABO
EUBANK
1" = 500'
OFFSITE DRAINAGE BASIN
CENTRAL BASIN

FIGURE 4

The primary drainage outfall for MANZANO MESA will be the Eubank Storm Drain. Due to the pressing need for this improvement, the project has recently been programmed for funding in 1995 by way of a $3.45 million bond issue which will be presented to the voters. Assuming the bond issue is approved, construction should follow in 1996. It has been mutually agreed by APS and the City that APS will assist the City on this project by providing financial support. APS will be financially responsible for their equitable portion of the project and will provide to the City a financial guarantee for that dollar amount. The financial guarantee will allow for approval of the subdivision plat for MANZANO MESA. Although on-site infrastructure will ultimately be required to convey drainage flows to the Eubank system, the City Engineer has agreed to waive these improvements at this time. Any development which occurs within MANZANO MESA prior to the completion of the Eubank system will be required to analyze downstream drainage conditions to determine the best possible drainage management plan. Since no outfall will exist without the Eubank system, it is likely that any interim plan would recommend temporary retention ponding.

The ultimate drainage management plan for MANZANO MESA is provided in the pocket of this document for review by the reader. The intent of the plan is to illustrate the drainage management criteria and to outline the infrastructure required to implement the plan. As shown by the plan, the entire project area, with the exception of Tracts B and C, will drain to the future Eubank storm drain. On-site storm drainage facilities will be required to convey flows to Eubank. These facilities have been sized for 100-year developed conditions (see Appendix).

The Eubank system is proposed as a free discharge facility which will drain excess flows from Central Avenue and pick up all developed flows along Eubank to the Tijeras Arroyo. In order to conceptualize the facility, EH&A reviewed the Albuquerque Master Drainage Study - Restudy and The Design Analysis Report, Eubank Storm Drainage System 201-03C. The AMDS - Restudy recommends an 84-inch pipe from Central graduating to a 120-inch pipe south of MANZANO MESA. The Design Analysis Report presents several alternatives, from open channel to closed conduit. Our analysis of these documents concluded that the AMDS - Restudy does not adequately represent the hydrologic conditions of MANZANO MESA. By utilizing the AMDS - Restudy hydrology, permanent detention ponding would be necessary.

The Design Analysis Report utilizes hydrology which more closely parallels expected conditions at MANZANO MESA. Therefore, we have utilized hydrology from that document to quantify flows and conditions from off-site basins. We then merged our on-site hydrology to size the Eubank system from Central to the Tijeras

Arroyo. As shown by Plate Three (Pocket), the system begins at Central as an 84-inch pipe and graduates to a 10' x 10' box culvert. The system sized in this manner will allow for free discharge of the 100-year developed basin (see Appendix).

At Central Avenue, a drop inlet system will be provided to collect excess overland flow. The pipe profile illustrated on Plate Three allows flexibility in case a connection to the existing 66-inch storm drain is desired to divert pipe flows to the Tijeras Arroyo. As requested by the City Hydrology Staff, the excess overland flow plus one-half of the pipe flow from the existing 66-inch pipe will be anticipated at Central Avenue. This results in a total diversion of approximately 250 cfs.

Tract B is proposed to drain into Elizabeth Street. A 24-inch extension from Central is recommended by the AMDS - Restudy. Draining Tract B into this line avoids the complication of extending a line up Southern from Eubank. In order to accommodate Tract B, the line must be upsized to at least 48 inches.

Tract C will drain east to the Juan Tabo Storm Drain. This concept has been anticipated by the consultant on the Juan Tabo project.

EROSION CONTROL

Temporary erosion control measures will be required for all future construction within the plan area. Details for these interim facilities will be determined as each project is assembled. Interim erosion control facilities presently exist on the property in the form of a ditch/dike system which is placed adjacent to all roadways. This system appears to be well maintained and is sufficient until development within the plan area begins.

INFRASTRUCTURE COST ESTIMATES

The following estimates are provided to identify anticipated construction costs and cost sharing for the Eubank storm drainage system. The estimates were developed utilizing current City of Albuquerque unit prices.

Estimate A represents the cost of the Eubank system, as illustrated on Plate Three, complete with stubouts at anticipated locations. Total estimated construction cost is approximately $6,794,808. Estimate B represents the cost of the Eubank system assuming MANZANO MESA does not enter the system. That is, the pipe would be sized to drain all flows except MANZANO MESA. Total estimated construction cost is approximately $5,778,411. By subtracting these two costs, the APS cost share would be approximately $1,016,397. This figure represents the cost share that APS is willing to financially guarantee to the City in return for approval of the subdivision plat for MANZANO MESA.

ESTIMATE "A"
December 21,1990
TOTAL IMPROVEMENT COSTS FOR
100-YEAR DEVELOPED CONDITION

Item	Amount	Unit Price	Cost
84" RCP Class III	2,300 L.F.	160.00	368,000
96" RCP Class III	650 L.F.	175.00	113,750
102" RCP Class III	1,750 L.F.	225.00	393,750
30" RCP Stubout Incl. Trench & BF	3 EA.	5,800.00	17,400
36" RCP Stubout Incl. Trench & BF	4 EA.	6,300.00	25,200
42" RCP Stubout Incl. Trench & BF	1 EA.	7,300.00	7,300
48" RCP Stubout Incl. Trench & BF	2 EA.	8,100.00	16,200
72" RCP Stubout Incl. Trench & BF	1 EA.	6,750.00	6,750
10' x 10' Concrete Box	6,300 L.F.	290.00	1,827,000
TRCHG 12'-16' Depth	2,160 L.F.	50.00	108,000
TRCHG 16'-20' Depth	2,660 L.F.	70.00	186,200
Trench excavation for depths greater than 20'	458,440 C.Y.	2.00	916,880
Backfill & compaction for trench depths greater than 20'	425,530 C.Y.	2.60	1,106,378
Pipe to Box Trans.	L.S.	10,000.00	10,000
Storm Inlets	40 EA.	Variable	100,000
Utility Relocation	L.S.	200,000.00	200,000

Item	Amount	Unit Price	Cost
Outlet Structure	L.S.	250,000.00	250,000
Manholes	28 EA.	4,000.00	112,000
Right-of-way	2 AC.	40,000.00	80,000
Pavement Rem. & Repl.	L.S.	665,000.00	665,000
Bracing & Shoring	L.S.	150,000.00	150,000
Detour Roadway	L.S.	135,000.00	135,000
*Total Estimated Construction Cost =			$6,794,808

*Does Not Include: Taxes, Engineering, Administration, Construction Management, Surveying, Testing, Contingency

NOTES:

1. All trench depths greater than 20' are based on trench prism requirements of O.S.H.A and are computed in cubic yards of excavation and fill.
2. These estimates lettered "A" and "B" are prepared based on a limited analysis and are for the sole purpose of determining the A.P.S. cost share for the Eubank storm drain facility (AMDS Project 02-03-1B). The A.P.S. cost share is determined by subtracting the amount of estimate "B" from the amount of estimate "A".

ESTIMATE "B"
December 21,1990
CITY IMPROVEMENT COSTS WITHOUT
MANZANO MESA CONTRIBUTION

Item	Amount	Unit Price	Cost
84" RCP Class III	6,800 L.F.	160.00	1,088,000
90" RCP Class III	3,700 L.F.	171.00	632,700
96" RCP Class III	500 L.F.	175.00	87,500
36" RCP Stubout Incl. Trench & BF	3 EA.	6,300.00	18,900
TRCHG 12'-16' Depth	2,160 L.F.	50.00	108,000
TRCHG 16'-20' Depth	2,660 L.F.	70.00	186,200
Trench excavation for depths greater than 20'	458,440 C.Y.	2.00	916,880
Backfill and compaction for trench depth greater than 20'	446,435 C.Y.	2.60	1,160,731
Storm Inlets	35 EA.	Variable	87,500
Utility Relocation	L.S.	200,000.00	200,000
Outlet Structure	L.S.	200,000.00	200,000
Manholes	28 EA.	4,000.00	112,000
Right-of-way	2 AC.	40,000.00	80,000
Pavement Rem. & Repl.	L.S.	665,000.00	665,000
Bracing & Shoring	L.S.	100,000.00	100,000
Detour Roadway	L.S.	135,000.00	135,000

*Total Estimated Construction Cost = $5,778,411

*Does Not Include: Taxes, Engineering, Administration, Construction Management, Surveying, Testing, Contingency

NOTES:

1. All trench depths greater than 20' are based on trench prism requirements of O.S.H.A. and are computed in cubic yards of excavation and fill.
2. These estimates lettered "A" and "B" are rpepared on a limited analysis and are for the sole purpose of determining the A.P.S. cost share for the (AMDS Project 02- 03-1B). The A.P.S. cost share is determined by subtracting the amount of estimate "B" from the amount of estimate "A".

CONCLUSIONS AND RECOMMENDATIONS

1. MANZANO MESA, containing approximately 480 acres, is proposed to be replatted to vacate certain existing parcel boundaries and street rights-of-way. This replatting will be approved as a bulk land variance. As such, all proposed tracts will be subject to additional City review either through the Site Development Plan or subdivision process.

2. The Juan Tabo Storm Sewer Project AMDS Project 2-07-1D is currently under construction. This system, when constructed, will intercept a substantial amount, if not all, of the off-site flows now crossing Juan Tabo and entering the plan area.

   However, because the proposed replat will precede completion of construction of the Juan Tabo project, the plat will grant easements for the existing 100-year flood plain.

3. This plat presents a conceptual design for the Eubank storm drainage system - AMDS Project 02-03-1B. The system will allow free discharge from MANZANO MESA. APS has agreed to financially guarantee their equitable share of the construction cost as outlined in this document.

4. As requested by the City Hydrology Staff, flow will be diverted from Central Avenue equivalent to all the overland flow plus one-half the pipe flow from the existing 66-inch storm drain.

5. The plan presents a conceptual design for the required on-site storm drainage improvements. The improvements are sized for 100-year developed conditions and will drain to the Eubank system. As a part of the bulk land variance, these improvements will be waived.

6. Based on the concepts outlined in the plan, the replat of bulk land variance should be approved. Further, at such time as the tracts develop, a site specific drainage plan will be required to address the then current site conditions.

7. Erosion control measures will not be required with the replat and bulk land variance since no construction is proposed. Site specific erosion control plans will be required with each subsequent development proposal.

8. The Elizabeth storm sewer, AMDS Project 02-02-2B, should be revised to reflect the upsizing of the line to 48 inches as recommended by this document.

9. Any tracts or parcels that develop prior to the completion of the Eubank storm drainage system will be required by provide downstream improvements as necessary, depending on available capacity.

REFERENCES

DEVELOPMENT PROCESS MANUAL, VOLUME II, City of Albuquerque, Chapter 22

SOIL SURVEY OF BERNALILLO COUNTY, NEW MEXICO, U.S. Soil Conservation Service

ALBUQUERQUE MASTER DRAINAGE STUDY, Volume II, Bohannan-Huston, Inc.

JUAN TABO STORM DRAIN DESIGN ANALYSIS REPORT, for the City of Albuquerque Public Works Department, Holmes and Narver, June 26, 1989

ALBUQUERQUE MASTER DRAINAGE STUDY - RESTUDY, Volume II, Bohannan-Huston, Inc.

DESIGN ANALYSIS REPORT, EUBANK STORM DRAINAGE SYSTEM 201,03C, Scanlon & Associates, December 1983

CALCULATIONS

I. CRITERIA

Criteria for hydrologic calculations is per the Rational and SCS methods of estimating storm runoff as outlined in the City of Albuquerque "Development Process Manual", Volume 11, Chapter 22.

Rainfall: P100/6 hour = 2.45 in. P100/24 hour = 3.00 in.
P10/6 hour = 1.61 in. P10/24 hour = 1.97 in.

Rainfall Intensity: $I = 6.84P(Tc^{-.51})$ (in/hr)

where P = rainfall (in)
Tc = time of conc. (min)

Time of Concentration: $Tc = 0.0078(L^{0.77})/S^{0.385}$ (min.)

where L = length (ft.)
S = slope (ft./ft.)

Soil: Tijeras (TgB), Embudo (EmB), Madurez-Wink (MWA)
Group 'B' soils

SCS curve number: CN per DPM, Vol. 11, plates 22.2 C2 & C3

Rational "C" factor: "C" factor by <u>Notice of Emergency Rule</u>

Runoff: Q = CIA (c.f.s.) - Rational Method

where A = basin area (ac.)
I = intensity (in/hr)
C = "C" factor

Volume: 3630AR (c.f.) - SCS Method

where A = basin area (ac.)
R = direct runoff (in.)

PROJECT NAME MANZANO MESA JOB NO. 11650

SUBJECT DRAINAGE CALCULATIONS

BY DL CK. BY _____ APPROVED BY _____ DATE 1-29-90 PAGE ____ OF ____

RATIONAL "C" FACTOR AND SCS CURVE NUMBER DETERMINATIONS:

ZONING	% IMPERVIOUS	"C"	CN	* R_{10} (IN.)	R_{100} (IN.)
UNDEV	0	0.40	70	0.10	0.40
R-1	60	0.65	85	0.40	1.00
R-2	70	0.75	89	0.70	1.30
SU-1	92	0.89	95	1.00	1.70
C-1	92	0.89	95	1.00	1.70
C-2	92	0.89	95	1.00	1.70
SCHOOL	50	0.60	80	0.30	0.70
PARK	25	0.43	61	0.10	0.40
ROADS	95	0.95	98	1.30	2.10

* DIRECT RUNOFF PER PLATE 22.2 C-4

NOTES:

MANZANO MESA
HYDROLOGY
EXISTING CONDITIONS

AP	Basin	Area (ac)	Tc (min)	i 100 (in/hr	C	CN	R 10 (in)	R 100 (in)	Q 10 (cfs)	Q 100 (cfs)	V 10 (cf)	V 100 (cf)
I	I	129.0	34	2.78	0.40	61	0.05	0.20	94.2	143.4	23414	93654
II	II	167.0	29	3.00	0.40	61	0.05	0.20	131.7	200.4	30311	121242
III	III	179.0	29	3.00	0.40	61	0.05	0.20	141.1	214.8	32489	129954
I	B,C,I	162.5	40	2.55	0.44	64	0.10	0.30	119.8	182.3	58988	176963
II	D,II	248.0	42	2.49	0.43	65	0.10	0.30	174.5	265.5	90024	270072
III	E,III	213.2	35	2.73	0.43	65	0.10	0.30	164.4	250.3	77392	232175
19	A	17.2	11	4.93	0.60	76	0.30	0.70	33.4	50.9	18731	43705
20	B	19.7	11	4.93	0.60	76	0.30	0.70	38.3	58.3	21453	50058
21	C	13.8	16	4.07	0.60	76	0.30	0.70	22.1	33.7	15028	35068
22	D	81.0	20	3.63	0.50	72	0.20	0.50	96.6	147.0	58806	147015
23	E	34.2	11	4.93	0.60	76	0.30	0.70	66.5	101.2	37244	86902

MANZANO MESA
HYDROLOGY
DEVELOPED CONDITIONS

AP	Basin	Area (ac)	Tc (min)	i 100 (in/hr)	C	CN	R 10 (in)	R 100 (in)	Q 10 (cfs)	Q 100 (cfs)	V 10 (cf)	V 100 (cf)
3	1	25.6	15	4.21	0.89	92	1.00	1.70	63.0	95.9	92928	157976
14	2	38.5	19	3.73	0.89	92	1.00	1.70	84.0	127.8	139755	237584
-	3	6.0	10	5.17	0.43	70	0.15	0.45	8.8	13.3	3267	9801
5	4	13.5	10	5.17	0.89	92	1.00	1.70	40.8	62.1	49005	83309
7	5	11.6	13	4.53	0.89	92	1.00	1.70	30.7	46.8	42108	71584
-	6	54.7	13	4.53	0.75	89	0.75	1.50	122.1	185.8	148921	297842
17	7	5.3	10	5.17	0.43	70	0.15	0.45	7.7	11.8	2886	8658
10	8	49.8	24	3.31	0.89	92	1.00	1.70	96.4	146.7	180774	307316
-	9	232.8	29	3.00	0.65	85	0.50	1.15	298.3	454.0	422532	971824
-	10	5.0	10	5.17	0.89	92	1.00	1.70	15.1	23.0	18150	30859
4	12	8.2	21	3.54	0.95	98	1.50	2.30	18.1	27.6	44649	68462
15	11	11.5	16	4.07	0.95	98	1.50	2.30	29.2	44.5	62618	96013
4	11,12	19.7	32	2.87	0.95	98	1.50	2.30	35.3	53.7	107267	164479
-	13	5.0	10	5.17	0.43	70	0.15	0.45	7.3	11.1	2723	8168
16	9a	119.8	29	3.00	0.65	85	0.50	1.15	153.5	233.6	217437	500109
17	9b	113.0	29	3.00	0.65	85	0.50	1.15	144.8	220.4	205095	471718
17	9,7, 13	243.1	29	3.00	0.65	85	0.05	1.15	311.4	474.0	44123	101482
18	6a	41.1	13	4.53	0.75	89	0.75	1.50	91.7	139.6	111895	223790
8	6b	13.6	13	4.53	0.75	89	0.75	1.50	30.4	46.2	37026	74052
2	F	30.0	15	4.21	0.45	65	0.10	0.30	37.3	56.8	10890	32670
11	G	44.0	22	3.46	0.70	87	0.70	1.40	69.9	106.4	111677	223354
12	H	43.8	20	3.64	0.61	76	0.30	0.70	63.9	97.3	47698	111290
13	I	52.2	26	3.18	0.54	73	0.25	0.65	58.9	89.7	47399	123232
1	CENT	247.0	54	2.19	0.62	76	0.30	0.70	220.3	330.0	268983	627622
2	CENT, F	277.0	54	2.19	0.64	85	0.50	1.15	255.1	387.7	502755	1156332
12	G,H	87.8	23	3.38	0.65	85	0.50	1.15	126.7	192.9	159357	366521
13	F-I	140.0	26	3.18	0.61	76	0.30	0.70	178.4	271.6	152460	355746

D

HYDROGRAPHS

Ultimate Improvement

Estimate "A"

ESPEY, HUSTON & ASSOCIATES INC.
Engineering & Environmental Consultants

MANZANO MESA

SUBJECT TOTAL HYDROGRAPH AT CENTRAL - EUBANK

SHEET ___ OF ___ BY DL

DATE 11-30-90 CK BY ___

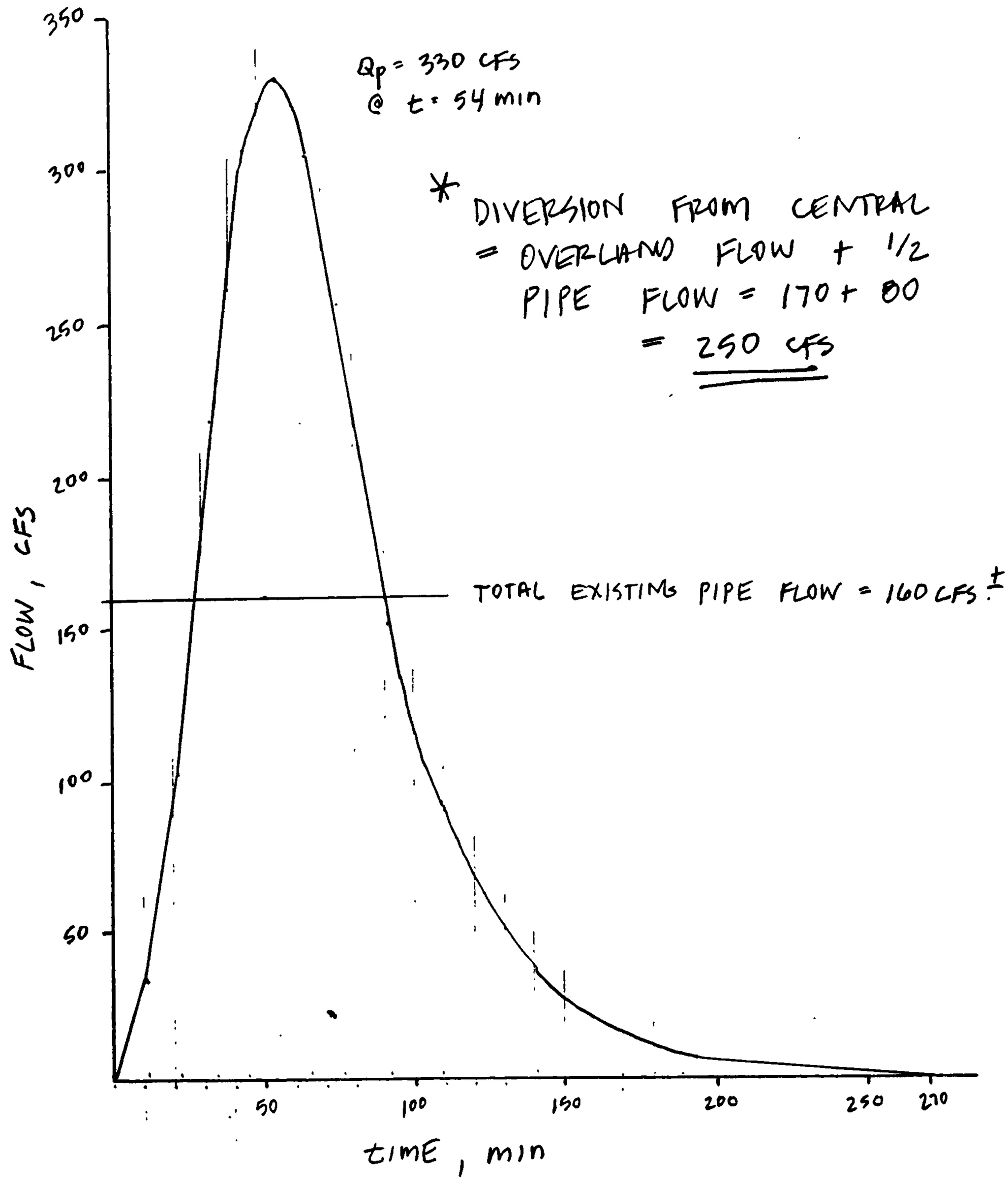

HYDROGRAPH COMPUTATION WORKSHEET

TOTAL HYDROGRAPH

		POINT	t/Tp	t	y	Q
BASIN: CENTRAL		1	0.0	0.0	0.000	0.0
		2	0.1	5.4	0.030	9.9
ANALYSIS POINT	1	3	0.2	10.8	0.100	33.0
		4	0.3	16.2	0.190	62.7
DRAINAGE AREA	247 AC	5	0.4	21.6	0.310	102.3
		6	0.5	27.0	0.470	155.1
Tc	54 MIN	7	0.6	32.4	0.660	217.8
		8	0.7	37.8	0.820	270.6
POINT RAINFALL	2.45 IN	9	0.8	43.2	0.930	306.9
		10	0.9	48.6	0.990	326.7
"C" FACTOR		11	1.0	54.0	1.000	330.0
		12	1.1	59.4	0.990	326.7
Q PEAK	330 CFS	13	1.2	64.8	0.930	306.9
		14	1.3	70.2	0.860	283.8
		15	1.4	75.6	0.780	257.4
		16	1.5	81.0	0.680	224.4
		17	1.6	86.4	0.560	184.8
		18	1.7	91.8	0.460	151.8
		19	1.8	97.2	0.390	128.7
		20	1.9	102.6	0.330	108.9
		21	2.0	108.0	0.280	92.4
		22	2.2	118.8	0.207	68.3
		23	2.4	129.6	0.147	48.5
		24	2.6	140.4	0.107	35.3
		25	2.8	151.2	0.077	25.4
		26	3.0	162.0	0.055	18.2
		27	3.2	172.8	0.040	13.2
		28	3.4	183.6	0.029	9.6
		29	3.6	194.4	0.021	6.9
		30	3.8	205.2	0.015	5.0
		31	4.0	216.0	0.011	3.6
		32	4.5	243.0	0.005	1.7
		33	5.0	270.0	0.000	0.0

DDD

HYDROGRAPH COMPUTATION WORKSHEET

DIVERSION FROM CENTRAL

BASIN: CENTRAL

ANALYSIS POINT 1

DRAINAGE AREA 247 AC

Tc 54 MIN

POINT RAINFALL 2.45 IN

"C" FACTOR

Q PEAK 250.0 CFS

≈241 CFS AMDS OK

POINT	t/Tp	t	y	Q
1	0.0	0.0	0.000	0.0
2	0.1	5.4	0.030	7.5
3	0.2	10.8	0.100	25.0
4	0.3	16.2	0.190	47.5
5	0.4	21.6	0.310	77.5
6	0.5	27.0	0.470	117.5
7	0.6	32.4	0.660	165.0
8	0.7	37.8	0.820	205.0
9	0.8	43.2	0.930	232.5
10	0.9	48.6	0.990	247.5
11	1.0	54.0	1.000	250.0
12	1.1	59.4	0.990	247.5
13	1.2	64.8	0.930	232.5
14	1.3	70.2	0.860	215.0
15	1.4	75.6	0.780	195.0
16	1.5	81.0	0.680	170.0
17	1.6	86.4	0.560	140.0
18	1.7	91.8	0.460	115.0
19	1.8	97.2	0.390	97.5
20	1.9	102.6	0.330	82.5
21	2.0	108.0	0.280	70.0
22	2.2	118.8	0.207	51.8
23	2.4	129.6	0.147	36.8
24	2.6	140.4	0.107	26.8
25	2.8	151.2	0.077	19.3
26	3.0	162.0	0.055	13.8
27	3.2	172.8	0.040	10.0
28	3.4	183.6	0.029	7.3
29	3.6	194.4	0.021	5.3
30	3.8	205.2	0.015	3.8
31	4.0	216.0	0.011	2.8
32	4.5	243.0	0.005	1.3
33	5.0	270.0	0.000	0.0

D

D

HYDROGRAPH COMPUTATION WORKSHEET

BASIN:	F
ANALYSIS POINT	2
DRAINAGE AREA	30.0 AC
Tc	15 MIN
POINT RAINFALL	2.45 IN
"C" FACTOR	
Q PEAK	56.8 CFS

POINT	t/Tp	t	y	Q
1	0.0	0.0	0.000	0.0
2	0.1	1.5	0.030	1.7
3	0.2	3.0	0.100	5.7
4	0.3	4.5	0.190	10.8
5	0.4	6.0	0.310	17.6
6	0.5	7.5	0.470	26.7
7	0.6	9.0	0.660	37.5
8	0.7	10.5	0.820	46.6
9	0.8	12.0	0.930	52.8
10	0.9	13.5	0.990	56.2
11	1.0	15.0	1.000	56.8
12	1.1	16.5	0.990	56.2
13	1.2	18.0	0.930	52.8
14	1.3	19.5	0.860	48.8
15	1.4	21.0	0.780	44.3
16	1.5	22.5	0.680	38.6
17	1.6	24.0	0.560	31.8
18	1.7	25.5	0.460	26.1
19	1.8	27.0	0.390	22.2
20	1.9	28.5	0.330	18.7
21	2.0	30.0	0.280	15.9
22	2.2	33.0	0.207	11.8
23	2.4	36.0	0.147	8.3
24	2.6	39.0	0.107	6.1
25	2.8	42.0	0.077	4.4
26	3.0	45.0	0.055	3.1
27	3.2	48.0	0.040	2.3
28	3.4	51.0	0.029	1.6
29	3.6	54.0	0.021	1.2
30	3.8	57.0	0.015	0.9
31	4.0	60.0	0.011	0.6
32	4.5	67.5	0.005	0.3
33	5.0	75.0	0.000	0.0

D

D

HYDROGRAPH COMPUTATION WORKSHEET

BASIN:	F,1,3
ANALYSIS POINT	3
DRAINAGE AREA	68.5 AC
Tc	19 MIN
POINT RAINFALL	2.45 IN
"C" FACTOR	
Q PEAK	178.9 CFS

POINT	t/Tp	t	y	Q
1	0.0	0.0	0.000	0.0
2	0.1	1.9	0.030	5.4
3	0.2	3.8	0.100	17.9
4	0.3	5.7	0.190	34.0
5	0.4	7.6	0.310	55.5
6	0.5	9.5	0.470	84.1
7	0.6	11.4	0.660	118.1
8	0.7	13.3	0.820	146.7
9	0.8	15.2	0.930	166.4
10	0.9	17.1	0.990	177.1
11	1.0	19.0	1.000	178.9
12	1.1	20.9	0.990	177.1
13	1.2	22.8	0.930	166.4
14	1.3	24.7	0.860	153.9
15	1.4	26.6	0.780	139.5
16	1.5	28.5	0.680	121.7
17	1.6	30.4	0.560	100.2
18	1.7	32.3	0.460	82.3
19	1.8	34.2	0.390	69.8
20	1.9	36.1	0.330	59.0
21	2.0	38.0	0.280	50.1
22	2.2	41.8	0.207	37.0
23	2.4	45.6	0.147	26.3
24	2.6	49.4	0.107	19.1
25	2.8	53.2	0.077	13.8
26	3.0	57.0	0.055	9.8
27	3.2	60.8	0.040	7.2
28	3.4	64.6	0.029	5.2
29	3.6	68.4	0.021	3.8
30	3.8	72.2	0.015	2.7
31	4.0	76.0	0.011	2.0
32	4.5	85.5	0.005	0.9
33	5.0	95.0	0.000	0.0

D

D
D
D

HYDROGRAPH COMPUTATION WORKSHEET

BASIN: F,1,3,11,12

ANALYSIS POINT 4

DRAINAGE AREA 88.2 AC

Tc 25 MIN

POINT RAINFALL 2.45 IN

"C" FACTOR

Q PEAK 217.9 CFS

POINT	t/Tp	t	y	Q
1	0.0	0.0	0.000	0.0
2	0.1	2.5	0.030	6.5
3	0.2	5.0	0.100	21.7
4	0.3	7.5	0.190	41.3
5	0.4	10.0	0.310	67.3
6	0.5	12.5	0.470	102.1
7	0.6	15.0	0.660	143.4
8	0.7	17.5	0.820	178.1
9	0.8	20.0	0.930	202.0
10	0.9	22.5	0.990	215.0
11	1.0	25.0	1.000	217.2
12	1.1	27.5	0.990	215.0
13	1.2	30.0	0.930	202.0
14	1.3	32.5	0.860	186.8
15	1.4	35.0	0.780	169.4
16	1.5	37.5	0.680	147.7
17	1.6	40.0	0.560	121.6
18	1.7	42.5	0.460	99.9
19	1.8	45.0	0.390	84.7
20	1.9	47.5	0.330	71.7
21	2.0	50.0	0.280	60.8
22	2.2	55.0	0.207	45.0
23	2.4	60.0	0.147	31.9
24	2.6	65.0	0.107	23.2
25	2.8	70.0	0.077	16.7
26	3.0	75.0	0.055	11.9
27	3.2	80.0	0.040	8.7
28	3.4	85.0	0.029	6.3
29	3.6	90.0	0.021	4.6
30	3.8	95.0	0.015	3.3
31	4.0	100.0	0.011	2.4
32	4.5	112.5	0.005	1.1
33	5.0	125.0	0.000	0.0

D

D

HYDROGRAPH COMPUTATION WORKSHEET

BASIN: F,1,3,4,11,12

ANALYSIS POINT 5

DRAINAGE AREA 101.7 AC

Tc 26 MIN

POINT RAINFALL 2.45 IN

"C" FACTOR

Q PEAK 249.0 CFS

POINT	t/Tp	t	y	Q
1	0.0	0.0	0.000	0.0
2	0.1	2.6	0.030	7.5
3	0.2	5.2	0.100	24.9
4	0.3	7.8	0.190	47.3
5	0.4	10.4	0.310	77.2
6	0.5	13.0	0.470	117.0
7	0.6	15.6	0.660	164.3
8	0.7	18.2	0.820	204.2
9	0.8	20.8	0.930	231.6
10	0.9	23.4	0.990	246.5
11	1.0	26.0	1.000	249.0
12	1.1	28.6	0.990	246.5
13	1.2	31.2	0.930	231.6
14	1.3	33.8	0.860	214.1
15	1.4	36.4	0.780	194.2
16	1.5	39.0	0.680	169.3
17	1.6	41.6	0.560	139.4
18	1.7	44.2	0.460	114.5
19	1.8	46.8	0.390	97.1
20	1.9	49.4	0.330	82.2
21	2.0	52.0	0.280	69.7
22	2.2	57.2	0.207	51.5
23	2.4	62.4	0.147	36.6
24	2.6	67.6	0.107	26.6
25	2.8	72.8	0.077	19.2
26	3.0	78.0	0.055	13.7
27	3.2	83.2	0.040	10.0
28	3.4	88.4	0.029	7.2
29	3.6	93.6	0.021	5.2
30	3.8	98.8	0.015	3.7
31	4.0	104.0	0.011	2.7
32	4.5	117.0	0.005	1.2
33	5.0	130.0	0.000	0.0

D

D

HYDROGRAPH COMPUTATION WORKSHEET

BASIN:	F,1,3,4,11,12,6A
ANALYSIS POINT	6
DRAINAGE AREA	142.8 AC
Tc	27 MIN
POINT RAINFALL	2.45 IN
"C" FACTOR	
Q PEAK	338.7 CFS

POINT	t/Tp	t	y	Q
1	0.0	0.0	0.000	0.0
2	0.1	2.7	0.030	10.2
3	0.2	5.4	0.100	33.9
4	0.3	8.1	0.190	64.4
5	0.4	10.8	0.310	105.0
6	0.5	13.5	0.470	159.2
7	0.6	16.2	0.660	223.5
8	0.7	18.9	0.820	277.7
9	0.8	21.6	0.930	315.0
10	0.9	24.3	0.990	335.3
11	1.0	27.0	1.000	338.7
12	1.1	29.7	0.990	335.3
13	1.2	32.4	0.930	315.0
14	1.3	35.1	0.860	291.3
15	1.4	37.8	0.780	264.2
16	1.5	40.5	0.680	230.3
17	1.6	43.2	0.560	189.7
18	1.7	45.9	0.460	155.8
19	1.8	48.6	0.390	132.1
20	1.9	51.3	0.330	111.8
21	2.0	54.0	0.280	94.8
22	2.2	59.4	0.207	70.1
23	2.4	64.8	0.147	49.8
24	2.6	70.2	0.107	36.2
25	2.8	75.6	0.077	26.1
26	3.0	81.0	0.055	18.6
27	3.2	86.4	0.040	13.5
28	3.4	91.8	0.029	9.8
29	3.6	97.2	0.021	7.1
30	3.8	102.6	0.015	5.1
31	4.0	108.0	0.011	3.7
32	4.5	121.5	0.005	1.7
33	5.0	135.0	0.000	0.0

D

D

HYDROGRAPH COMPUTATION WORKSHEET

BASIN:	F,1,3-5,6A,11,12
ANALYSIS POINT	7
DRAINAGE AREA	154.4 AC
Tc	28 MIN
POINT RAINFALL	2.45 IN
"C" FACTOR	
Q PEAK	364.2 CFS

POINT	t/Tp	t	y	Q
1	0.0	0.0	0.000	0.0
2	0.1	2.8	0.030	10.9
3	0.2	5.6	0.100	36.4
4	0.3	8.4	0.190	69.2
5	0.4	11.2	0.310	112.9
6	0.5	14.0	0.470	171.2
7	0.6	16.8	0.660	240.4
8	0.7	19.6	0.820	298.6
9	0.8	22.4	0.930	338.7
10	0.9	25.2	0.990	360.6
11	1.0	28.0	1.000	364.2
12	1.1	30.8	0.990	360.6
13	1.2	33.6	0.930	338.7
14	1.3	36.4	0.860	313.2
15	1.4	39.2	0.780	284.1
16	1.5	42.0	0.680	247.7
17	1.6	44.8	0.560	204.0
18	1.7	47.6	0.460	167.5
19	1.8	50.4	0.390	142.0
20	1.9	53.2	0.330	120.2
21	2.0	56.0	0.280	102.0
22	2.2	61.6	0.207	75.4
23	2.4	67.2	0.147	53.5
24	2.6	72.8	0.107	39.0
25	2.8	78.4	0.077	28.0
26	3.0	84.0	0.055	20.0
27	3.2	89.6	0.040	14.6
28	3.4	95.2	0.029	10.6
29	3.6	100.8	0.021	7.6
30	3.8	106.4	0.015	5.5
31	4.0	112.0	0.011	4.0
32	4.5	126.0	0.005	1.8
33	5.0	140.0	0.000	0.0

D

D

HYDROGRAPH COMPUTATION WORKSHEET

BASIN: F,1,3-6,11,12

ANALYSIS POINT 8

DRAINAGE AREA 168.0 AC

Tc 31 MIN

POINT RAINFALL 2.45 IN

"C" FACTOR

Q PEAK 371.5 CFS

POINT	t/Tp	t	y	Q	
1	0.0	0.0	0.000	0.0	
2	0.1	3.1	0.030	11.1	
3	0.2	6.2	0.100	37.2	
4	0.3	9.3	0.190	70.6	
5	0.4	12.4	0.310	115.2	
6	0.5	15.5	0.470	174.6	
7	0.6	18.6	0.660	245.2	
8	0.7	21.7	0.820	304.6	
9	0.8	24.8	0.930	345.5	
10	0.9	27.9	0.990	367.8	
11	1.0	31.0	1.000	371.5	5
12	1.1	34.1	0.990	367.8	5
13	1.2	37.2	0.930	345.5	5
14	1.3	40.3	0.860	319.5	
15	1.4	43.4	0.780	289.8	
16	1.5	46.5	0.680	252.6	
17	1.6	49.6	0.560	208.0	
18	1.7	52.7	0.460	170.9	
19	1.8	55.8	0.390	144.9	
20	1.9	58.9	0.330	122.6	
21	2.0	62.0	0.280	104.0	
22	2.2	68.2	0.207	76.9	
23	2.4	74.4	0.147	54.6	
24	2.6	80.6	0.107	39.8	
25	2.8	86.8	0.077	28.6	
26	3.0	93.0	0.055	20.4	
27	3.2	99.2	0.040	14.9	
28	3.4	105.4	0.029	10.8	
29	3.6	111.6	0.021	7.8	
30	3.8	117.8	0.015	5.6	
31	4.0	124.0	0.011	4.1	
32	4.5	139.5	0.005	1.9	
33	5.0	155.0	0.000	0.0	

D

D

HYDROGRAPH COMPUTATION WORKSHEET

BASIN: F,1,3-7,9,11-13

ANALYSIS POINT 9

DRAINAGE AREA 411.0 AC

Tc 32 MIN

POINT RAINFALL 2.45 IN

"C" FACTOR

Q PEAK 822.8 CFS

POINT	t/Tp	t	y	Q
1	0.0	0.0	0.000	0.0
2	0.1	3.2	0.030	24.7
3	0.2	6.4	0.100	82.3
4	0.3	9.6	0.190	156.3
5	0.4	12.8	0.310	255.1
6	0.5	16.0	0.470	386.7
7	0.6	19.2	0.660	543.0
8	0.7	22.4	0.820	674.7
9	0.8	25.6	0.930	765.2
10	0.9	28.8	0.990	814.6
11	1.0	32.0	1.000	822.8
12	1.1	35.2	0.990	814.6
13	1.2	38.4	0.930	765.2
14	1.3	41.6	0.860	707.6
15	1.4	44.8	0.780	641.8
16	1.5	48.0	0.680	559.5
17	1.6	51.2	0.560	460.8
18	1.7	54.4	0.460	378.5
19	1.8	57.6	0.390	320.9
20	1.9	60.8	0.330	271.5
21	2.0	64.0	0.280	230.4
22	2.2	70.4	0.207	170.3
23	2.4	76.8	0.147	121.0
24	2.6	83.2	0.107	88.0
25	2.8	89.6	0.077	63.4
26	3.0	96.0	0.055	45.3
27	3.2	102.4	0.040	32.9
28	3.4	108.8	0.029	23.9
29	3.6	115.2	0.021	17.3
30	3.8	121.6	0.015	12.3
31	4.0	128.0	0.011	9.1
32	4.5	144.0	0.005	4.1
33	5.0	160.0	0.000	0.0

D

D

HYDROGRAPH COMPUTATION WORKSHEET

BASIN: F,1,3-9,11-13

ANALYSIS POINT 10

DRAINAGE AREA 460.8 AC

Tc 33 MIN

POINT RAINFALL 2.45 IN

"C" FACTOR

Q PEAK 935.6 CFS

POINT	t/Tp	t	y	Q
1	0.0	0.0	0.000	0.0
2	0.1	3.3	0.030	28.1
3	0.2	6.6	0.100	93.6
4	0.3	9.9	0.190	177.8
5	0.4	13.2	0.310	290.0
6	0.5	16.5	0.470	439.7
7	0.6	19.8	0.660	617.5
8	0.7	23.1	0.820	767.2
9	0.8	26.4	0.930	870.1
10	0.9	29.7	0.990	926.2
11	1.0	33.0	1.000	935.6
12	1.1	36.3	0.990	926.2
13	1.2	39.6	0.930	870.1
14	1.3	42.9	0.860	804.6
15	1.4	46.2	0.780	729.8
16	1.5	49.5	0.680	636.2
17	1.6	52.8	0.560	523.9
18	1.7	56.1	0.460	430.4
19	1.8	59.4	0.390	364.9
20	1.9	62.7	0.330	308.7
21	2.0	66.0	0.280	262.0
22	2.2	72.6	0.207	193.7
23	2.4	79.2	0.147	137.5
24	2.6	85.8	0.107	100.1
25	2.8	92.4	0.077	72.0
26	3.0	99.0	0.055	51.5
27	3.2	105.6	0.040	37.4
28	3.4	112.2	0.029	27.1
29	3.6	118.8	0.021	19.6
30	3.8	125.4	0.015	14.0
31	4.0	132.0	0.011	10.3
32	4.5	148.5	0.005	4.7
33	5.0	165.0	0.000	0.0

D

D

HYDROGRAPH COMPUTATION WORKSHEET

BASIN: F,1,3-9,11-13,G

ANALYSIS POINT 11

DRAINAGE AREA 504.8 AC

Tc 37 MIN

POINT RAINFALL 2.45 IN

"C" FACTOR

Q PEAK 966.8 CFS

POINT	t/Tp	t	y	Q
1	0.0	0.0	0.000	0.0
2	0.1	3.7	0.030	29.0
3	0.2	7.4	0.100	96.7
4	0.3	11.1	0.190	183.7
5	0.4	14.8	0.310	299.7
6	0.5	18.5	0.470	454.4
7	0.6	22.2	0.660	638.1
8	0.7	25.9	0.820	792.8
9	0.8	29.6	0.930	899.1
10	0.9	33.3	0.990	957.1
11	1.0	37.0	1.000	966.8
12	1.1	40.7	0.990	957.1
13	1.2	44.4	0.930	899.1
14	1.3	48.1	0.860	831.4
15	1.4	51.8	0.780	754.1
16	1.5	55.5	0.680	657.4
17	1.6	59.2	0.560	541.4
18	1.7	62.9	0.460	444.7
19	1.8	66.6	0.390	377.1
20	1.9	70.3	0.330	319.0
21	2.0	74.0	0.280	270.7
22	2.2	81.4	0.207	200.1
23	2.4	88.8	0.147	142.1
24	2.6	96.2	0.107	103.4
25	2.8	103.6	0.077	74.4
26	3.0	111.0	0.055	53.2
27	3.2	118.4	0.040	38.7
28	3.4	125.8	0.029	28.0
29	3.6	133.2	0.021	20.3
30	3.8	140.6	0.015	14.5
31	4.0	148.0	0.011	10.6
32	4.5	166.5	0.005	4.8
33	5.0	185.0	0.000	0.0

D

D

HYDROGRAPH COMPUTATION WORKSHEET

BASIN: F, 1, 3-9, 11-13, G, H

ANALYSIS POINT 12

DRAINAGE AREA 548.6 AC

Tc 39 MIN

POINT RAINFALL 2.45 IN

"C" FACTOR

Q PEAK 1008.8 CF

POINT	t/Tp	t	y	Q
1	0.0	0.0	0.000	0.0
2	0.1	3.9	0.030	30.3
3	0.2	7.8	0.100	100.9
4	0.3	11.7	0.190	191.7
5	0.4	15.6	0.310	312.7
6	0.5	19.5	0.470	474.1
7	0.6	23.4	0.660	665.8
8	0.7	27.3	0.820	827.2
9	0.8	31.2	0.930	938.2
10	0.9	35.1	0.990	998.7
11	1.0	39.0	1.000	1008.8
12	1.1	42.9	0.990	998.7
13	1.2	46.8	0.930	938.2
14	1.3	50.7	0.860	867.6
15	1.4	54.6	0.780	786.9
16	1.5	58.5	0.680	686.0
17	1.6	62.4	0.560	564.9
18	1.7	66.3	0.460	464.0
19	1.8	70.2	0.390	393.4
20	1.9	74.1	0.330	332.9
21	2.0	78.0	0.280	282.5
22	2.2	85.8	0.207	208.8
23	2.4	93.6	0.147	148.3
24	2.6	101.4	0.107	107.9
25	2.8	109.2	0.077	77.7
26	3.0	117.0	0.055	55.5
27	3.2	124.8	0.040	40.4
28	3.4	132.6	0.029	29.3
29	3.6	140.4	0.021	21.2
30	3.8	148.2	0.015	15.1
31	4.0	156.0	0.011	11.1
32	4.5	175.5	0.005	5.0
33	5.0	195.0	0.000	0.0

D

D

HYDROGRAPH COMPUTATION WORKSHEET

BASIN: F-I,1,3-9,11-13

ANALYSIS POINT 13

DRAINAGE AREA 600.8 AC

Tc 45 MIN

POINT RAINFALL 2.45 IN

"C" FACTOR

Q PEAK 1009.3 CF

POINT	t/Tp	t	y	Q
1	0.0	0.0	0.000	0.0
2	0.1	4.5	0.030	30.3
3	0.2	9.0	0.100	100.9
4	0.3	13.5	0.190	191.8
5	0.4	18.0	0.310	312.9
6	0.5	22.5	0.470	474.4
7	0.6	27.0	0.660	666.1
8	0.7	31.5	0.820	827.6
9	0.8	36.0	0.930	938.6
10	0.9	40.5	0.990	999.2
11	1.0	45.0	1.000	1009.3
12	1.1	49.5	0.990	999.2
13	1.2	54.0	0.930	938.6
14	1.3	58.5	0.860	868.0
15	1.4	63.0	0.780	787.3
16	1.5	67.5	0.680	686.3
17	1.6	72.0	0.560	565.2
18	1.7	76.5	0.460	464.3
19	1.8	81.0	0.390	393.6
20	1.9	85.5	0.330	333.1
21	2.0	90.0	0.280	282.6
22	2.2	99.0	0.207	208.9
23	2.4	108.0	0.147	148.4
24	2.6	117.0	0.107	108.0
25	2.8	126.0	0.077	77.7
26	3.0	135.0	0.055	55.5
27	3.2	144.0	0.040	40.4
28	3.4	153.0	0.029	29.3
29	3.6	162.0	0.021	21.2
30	3.8	171.0	0.015	15.1
31	4.0	180.0	0.011	11.1
32	4.5	202.5	0.005	5.0
33	5.0	225.0	0.000	0.0

D

HYDROGRAPHS

Without Manzano Mesa

Estimate "B"

D

HYDROGRAPH COMPUTATION WORKSHEET

TOTAL HYDROGRAPH

BASIN:	CENTRAL & F
ANALYSIS POINT	2
DRAINAGE AREA	285.5 AC
Tc	54 MIN
POINT RAINFALL	2.45 IN
"C" FACTOR	
Q PEAK	387.7

POINT	t/Tp	t	y	Q
1	0.0	0.0	0.000	0.0
2	0.1	5.4	0.030	11.6
3	0.2	10.8	0.100	38.8
4	0.3	16.2	0.190	73.7
5	0.4	21.6	0.310	120.2
6	0.5	27.0	0.470	182.2
7	0.6	32.4	0.660	255.9
8	0.7	37.8	0.820	317.9
9	0.8	43.2	0.930	360.6
10	0.9	48.6	0.990	383.8
11	1.0	54.0	1.000	387.7
12	1.1	59.4	0.990	383.8
13	1.2	64.8	0.930	360.6
14	1.3	70.2	0.860	333.4
15	1.4	75.6	0.780	302.4
16	1.5	81.0	0.680	263.6
17	1.6	86.4	0.560	217.1
18	1.7	91.8	0.460	178.3
19	1.8	97.2	0.390	151.2
20	1.9	102.6	0.330	127.9
21	2.0	108.0	0.280	108.6
22	2.2	118.8	0.207	80.3
23	2.4	129.6	0.147	57.0
24	2.6	140.4	0.107	41.5
25	2.8	151.2	0.077	29.9
26	3.0	162.0	0.055	21.3
27	3.2	172.8	0.040	15.5
28	3.4	183.6	0.029	11.2
29	3.6	194.4	0.021	8.1
30	3.8	205.2	0.015	5.8
31	4.0	216.0	0.011	4.3
32	4.5	243.0	0.005	1.9
33	5.0	270.0	0.000	0.0

D

D

HYDROGRAPH COMPUTATION WORKSHEET

DIVERSION FROM CENTRAL

BASIN:	CENTRAL & F
ANALYSIS POINT	2
DRAINAGE AREA	285.5 AC
Tc	64 MIN
POINT RAINFALL	2.45 IN
"C" FACTOR	
Q PEAK	327.7

POINT	t/Tp	t	y	Q
1	0.0	0.0	0.000	0.0
2	0.1	6.4	0.030	9.8
3	0.2	12.8	0.100	32.8
4	0.3	19.2	0.190	62.3
5	0.4	25.6	0.310	101.6
6	0.5	32.0	0.470	154.0
7	0.6	38.4	0.660	216.3
8	0.7	44.8	0.820	268.7
9	0.8	51.2	0.930	304.8
10	0.9	57.6	0.990	324.4
11	1.0	64.0	1.000	327.7
12	1.1	70.4	0.990	324.4
13	1.2	76.8	0.930	304.8
14	1.3	83.2	0.860	281.8
15	1.4	89.6	0.780	255.6
16	1.5	96.0	0.680	222.8
17	1.6	102.4	0.560	183.5
18	1.7	108.8	0.460	150.7
19	1.8	115.2	0.390	127.8
20	1.9	121.6	0.330	108.1
21	2.0	128.0	0.280	91.8
22	2.2	140.8	0.207	67.8
23	2.4	153.6	0.147	48.2
24	2.6	166.4	0.107	35.1
25	2.8	179.2	0.077	25.2
26	3.0	192.0	0.055	18.0
27	3.2	204.8	0.040	13.1
28	3.4	217.6	0.029	9.5
29	3.6	230.4	0.021	6.9
30	3.8	243.2	0.015	4.9
31	4.0	256.0	0.011	3.6
32	4.5	288.0	0.005	1.6
33	5.0	320.0	0.000	0.0

D

D

HYDROGRAPH COMPUTATION WORKSHEET

BASIN: "G"	
ANALYSIS POINT	11
DRAINAGE AREA	44.0 AC
Tc	22 MIN
POINT RAINFALL	2.45 IN
"C" FACTOR	
Q PEAK	106.4 CFS

POINT	t/Tp	t	y	Q
1	0.0	0.0	0.000	0.0
2	0.1	2.2	0.030	3.2
3	0.2	4.4	0.100	10.6
4	0.3	6.6	0.190	20.2
5	0.4	8.8	0.310	33.0
6	0.5	11.0	0.470	50.0
7	0.6	13.2	0.660	70.2
8	0.7	15.4	0.820	87.2
9	0.8	17.6	0.930	99.0
10	0.9	19.8	0.990	105.3
11	1.0	22.0	1.000	106.4
12	1.1	24.2	0.990	105.3
13	1.2	26.4	0.930	99.0
14	1.3	28.6	0.860	91.5
15	1.4	30.8	0.780	83.0
16	1.5	33.0	0.680	72.4
17	1.6	35.2	0.560	59.6
18	1.7	37.4	0.460	48.9
19	1.8	39.6	0.390	41.5
20	1.9	41.8	0.330	35.1
21	2.0	44.0	0.280	29.8
22	2.2	48.4	0.207	22.0
23	2.4	52.8	0.147	15.6
24	2.6	57.2	0.107	11.4
25	2.8	61.6	0.077	8.2
26	3.0	66.0	0.055	5.9
27	3.2	70.4	0.040	4.3
28	3.4	74.8	0.029	3.1
29	3.6	79.2	0.021	2.2
30	3.8	83.6	0.015	1.6
31	4.0	88.0	0.011	1.2
32	4.5	99.0	0.005	0.5
33	5.0	110.0	0.000	0.0

D

D

HYDROGRAPH COMPUTATION WORKSHEET

BASIN:	G,H
ANALYSIS POINT	12
DRAINAGE AREA	87.8 AC
Tc	23 MIN
POINT RAINFALL	2.45 IN
"C" FACTOR	
Q PEAK	192.9 CFS

POINT	t/Tp	t	y	Q
1	0.0	0.0	0.000	0.0
2	0.1	2.3	0.030	5.8
3	0.2	4.6	0.100	19.3
4	0.3	6.9	0.190	36.7
5	0.4	9.2	0.310	59.8
6	0.5	11.5	0.470	90.7
7	0.6	13.8	0.660	127.3
8	0.7	16.1	0.820	158.2
9	0.8	18.4	0.930	179.4
10	0.9	20.7	0.990	191.0
11	1.0	23.0	1.000	192.9
12	1.1	25.3	0.990	191.0
13	1.2	27.6	0.930	179.4
14	1.3	29.9	0.860	165.9
15	1.4	32.2	0.780	150.5
16	1.5	34.5	0.680	131.2
17	1.6	36.8	0.560	108.0
18	1.7	39.1	0.460	88.7
19	1.8	41.4	0.390	75.2
20	1.9	43.7	0.330	63.7
21	2.0	46.0	0.280	54.0
22	2.2	50.6	0.207	39.9
23	2.4	55.2	0.147	28.4
24	2.6	59.8	0.107	20.6
25	2.8	64.4	0.077	14.9
26	3.0	69.0	0.055	10.6
27	3.2	73.6	0.040	7.7
28	3.4	78.2	0.029	5.6
29	3.6	82.8	0.021	4.1
30	3.8	87.4	0.015	2.9
31	4.0	92.0	0.011	2.1
32	4.5	103.5	0.005	1.0
33	5.0	115.0	0.000	0.0

D

D

HYDROGRAPH COMPUTATION WORKSHEET

BASIN: G,H,I

ANALYSIS POINT 13

DRAINAGE AREA 140.0 AC

Tc 26 MIN

POINT RAINFALL 2.45 IN

"C" FACTOR

Q PEAK 271.6 CFS

POINT	t/Tp	t	y	Q
1	0.0	0.0	0.000	0.0
2	0.1	2.6	0.030	8.1
3	0.2	5.2	0.100	27.2
4	0.3	7.8	0.190	51.6
5	0.4	10.4	0.310	84.2
6	0.5	13.0	0.470	127.7
7	0.6	15.6	0.660	179.3
8	0.7	18.2	0.820	222.7
9	0.8	20.8	0.930	252.6
10	0.9	23.4	0.990	268.9
11	1.0	26.0	1.000	271.6
12	1.1	28.6	0.990	268.9
13	1.2	31.2	0.930	252.6
14	1.3	33.8	0.860	233.6
15	1.4	36.4	0.780	211.8
16	1.5	39.0	0.680	184.7
17	1.6	41.6	0.560	152.1
18	1.7	44.2	0.460	124.9
19	1.8	46.8	0.390	105.9
20	1.9	49.4	0.330	89.6
21	2.0	52.0	0.280	76.0
22	2.2	57.2	0.207	56.2
23	2.4	62.4	0.147	39.9
24	2.6	67.6	0.107	29.1
25	2.8	72.8	0.077	20.9
26	3.0	78.0	0.055	14.9
27	3.2	83.2	0.040	10.9
28	3.4	88.4	0.029	7.9
29	3.6	93.6	0.021	5.7
30	3.8	98.8	0.015	4.1
31	4.0	104.0	0.011	3.0
32	4.5	117.0	0.005	1.4
33	5.0	130.0	0.000	0.0

D

ESPEY, HUSTON & ASSOCIATES INC.
Engineering & Environmental Consultants

SUBJECT HGL ANALYSIS

MANZANO MESA

SHEET ___ OF ___ BY DL

DATE 11-15-90 CK BY ___

NETWORK SCHEMATIC

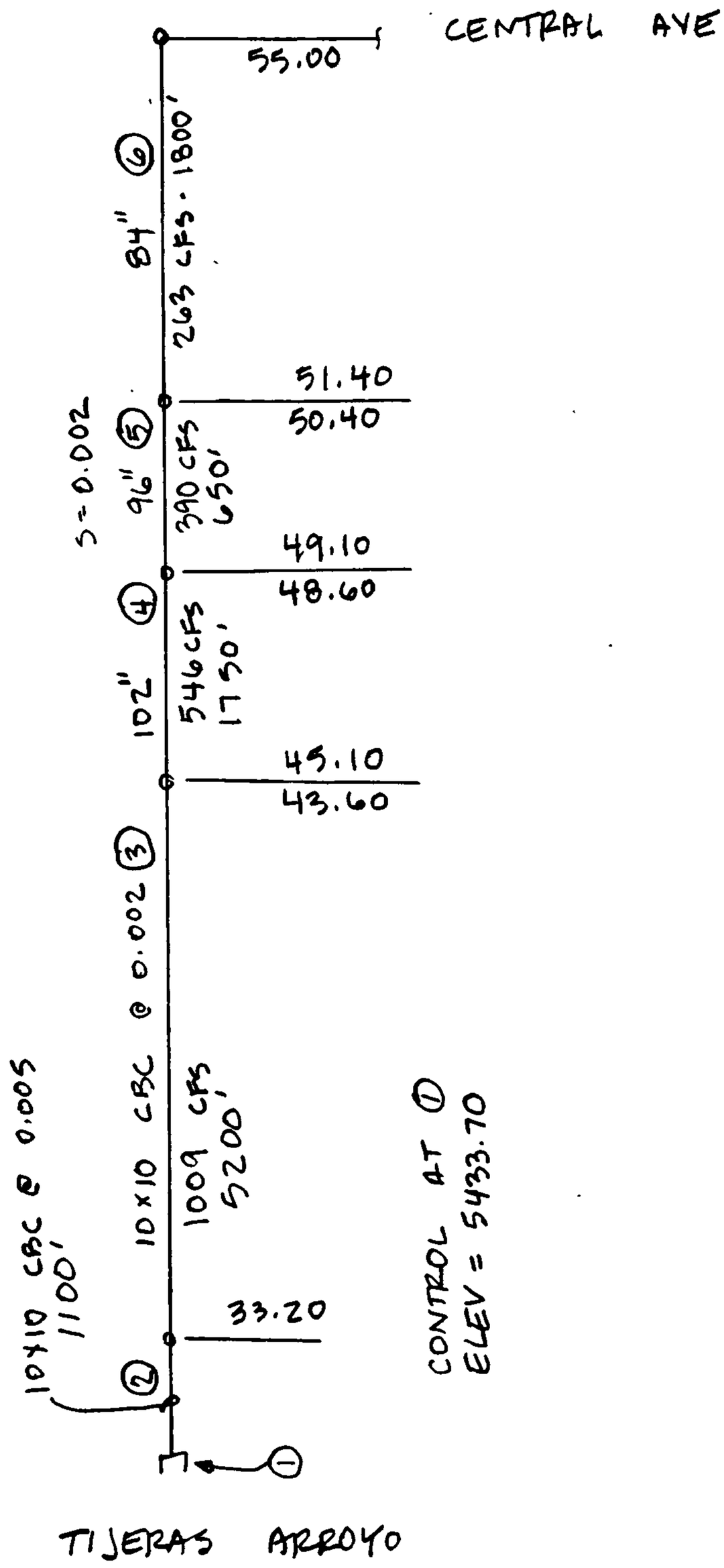

User: DL1597 -at ABQPR

<XXX>Q.ENG>STORM>O_MANZANO.SD

```
*****************************************************************************************************
*****************************************************************************************************

WWWW  W       W   WWWWW  WWW  WWWWW
W   W W      WW   W     W   W     W
W   W W       W   WWWW  W   W    W
W   W W       W       W  WWWW   W
W   W W       W       W     W  W
W   W W       W   W   W    W  W
WWWW  WWWWW  WWW   WWW  WWW   W


 WWW        W   W  WWW  W   W WWWWW  WWW  W   W  WWW        WWW  WWWW
W   W       WW WW W   W WW  W     W W   W WW  W W   W       W   W W   W
W   W       W W W W   W W W W    W  W   W W W W W   W       W    W   W
W   W       W W W WWWWW W W W   W   WWWWW W W W W   W        WWW  W   W
W   W       W   W W   W W W W  W    W   W W W W W   W           W W   W
W   W       W   W W   W W  WW W    W   W W  WW W   W   WW  W   W W   W
 WWW  WWWWW W   W W   W W   W WWWWW W   W W   W  WWW    WW   WWW  WWWW

*****************************************************************************************************
*****************************************************************************************************
```

Label: PRT072 -form

Pathname: <XXX>Q.ENG>STORM>O_MANZANO.SD
File last modified: 90-12-03.16:02:56.Mon

Spooled: 90-12-03.16:03:56.Mon [Spooler rev 19.4]
Started: 90-12-03.16:04:00.Mon on: AML.C by: ABQPR

1 STORM DRAIN ANALYSIS
(INPUT)

PROJECT MANZANO MESA - EUBANK STORM DRAIN HGL D. DATE 12/03/90
DESIGNER LORENZ PAGE 1

CD	L2	MAX Q	ADJ Q	LENGTH	FL 1	FL 2	CTL/TW	D	W	S	KJ	KE	KM	LC	L1	L3	L4	A1	A3	A4	J	N
8	1						5433.70															
2	2	1247.0	1247.0	1100.00	5427.70	5433.20	0.00	120.	120.	3	0.00	0.10	0.05	1	3	0	0	0.	0.	0.	6.00	0.012
2	3	1247.0	1247.0	5200.00	5433.20	5443.60	0.00	120.	120.	3	0.00	0.10	0.05	0	4	0	0	0.	0.	0.	6.00	0.012
2	4	546.0	546.0	1750.00	5445.10	5448.60	0.00	102.	0.	3	0.00	0.10	0.05	0	5	0	0	0.	0.	0.	6.00	0.012
2	5	390.0	390.0	650.00	5449.10	5450.40	0.00	96.	0.	3	0.00	0.10	0.05	0	6	0	0	0.	0.	0.	6.00	0.012
2	6	263.0	263.0	1800.00	5451.40	5455.00	0.00	84.	0.	1	0.00	0.10	0.05	0	0	0	0	0.	0.	0.	6.00	0.012

1 STORM DRAIN ANALYSIS

PROJECT MANZANO MESA - EUBANK STORM DRAIN HGL D. DATE 12/03/90
DESIGNER LORENZ PAGE 1

LINE NO	Q (CFS)	D (IN)	W (IN)	DN (FT)	DC (FT)	FLOW TYPE	SF-FULL (FT/FT)	V 1 (FPS)	V 2 (FPS)	FL 1 (FT)	FL 2 (FT)	HG 1 CALC	HG 2 CALC	D 1 (FT)	D 2 (FT)	TW CALC	TW CK	REMARKS
1	HYDRAULIC GRADE LINE CONTROL = 5433.70																	
2	1247.0	120	120	6.99	7.84	PART	0.00299	17.8	15.9	5427.70	5433.20	5434.69	5441.03	6.99	7.83	0.00	0.00	
	X =		0.00	X(N) =	345.02													
3	1247.0	120	120	10.00	7.84	SEAL	0.00299	15.9	12.5	5433.20	5443.60	5441.04	5453.67	7.84	10.07	0.00	0.00	
	X =	5126.91		X(N) =	0.00													
4	546.0	102	0	8.50	5.86	FULL	0.00221	9.6	9.6	5445.10	5448.60	5457.75	5461.62	12.65	13.02	0.00	0.00	
5	390.0	96	0	5.84	5.01	FULL	0.00156	7.8	7.8	5449.10	5450.40	5462.92	5463.93	13.82	13.53	0.00	0.00	
6	263.0	84	0	4.96	4.25	FULL	0.00144	6.8	6.8	5451.40	5455.00	5464.79	5467.39	13.39	12.39	5468.19	0.00	

1 V 1, FL 1, D 1 AND HG 1 REFER TO DOWNSTREAM END
V 2, FL 2, D 2 AND HG 2 REFER TO UPSTREAM END
X - DISTANCE IN FEET FROM DOWNSTREAM END TO POINT WHERE HG INTERSECTS SOFFIT IN SEAL CONDITION
X(N) - DISTANCE IN FEET FROM DOWNSTREAM END TO POINT WHERE WATER SURFACE REACHES NORMAL DEPTH BY EITHER DRAWDOWN OR BACKWATER
X(J) - DISTANCE IN FEET FROM DOWNSTREAM END TO POINT WHERE HYDRAULIC JUMP OCCURS IN LINE
F(J) - THE COMPUTED FORCE AT THE HYDRAULIC JUMP

D(BJ) - DEPTH OF WATER BEFORE THE HYDRAULIC JUMP (UPSTREAM SIDE)
D(AJ) - DEPTH OF WATER AFTER THE HYDRAULIC JUMP (DOWNSTREAM SIDE)
SEAL INDICATES FLOW CHANGES FROM PART TO FULL OR FROM FULL TO PART
HYD JUMP INDICATES THAT FLOW CHANGES FROM SUPERCRITICAL TO SUBCRITICAL THROUGH A HYDRAULIC JUMP
HJ @ UJT INDICATES THAT HYDRAULIC JUMP OCCURS AT THE JUNCTION AT THE UPSTREAM END OF THE LINE
HJ @ DJT INDICATES THAT HYDRAULIC JUMP OCCURS AT THE JUNCTION AT THE DOWNSTREAM END OF THE LINE

EOJ
1

MANZANO MESA

INFRASTRUCTURE SIZING (OFF-SITE)

WITH M. MESA CONTRIBUTION - ESTIMATE 'A'

AP.	CONTRIB BASINS	TOTAL AREA (AC.)	COMPUTED TC (min.)	i_{100} (in/hr)	RATIONAL 'C'	Q100 (CFS)	Q10 (CFS)	STRUCTURE SIZE
1.	CENTRAL EXCESS		54			250*	0*	84" @ 0.002**
2.	F	30.0	15	4.21	0.45	56.8	37.3	
2.	+ CENT.		⟨54⟩			⟨251.2⟩		84" @ 0.002*
3.	F, 1, 3	68.5	19	3.73	0.70	178.9	117.5	
3.	+ CENT.		⟨54⟩			⟨262.7⟩		84" @ 0.002
4.	F, 1, 3, 11, 12	88.2	25	3.24	0.76	217.2	142.7	
4.	+ CENT.		⟨54⟩			⟨352.7⟩		96" @ 0.002
5.	F, 1, 3, 4, 11, 12	101.7	26	3.18	0.77	249.0	163.6	
5.	+ CENT		⟨34⟩			⟨389.5⟩		96" @ 0.002
6.	F, 1, 3, 4, 6A 11, 12	142.8	27	3.12	0.76	338.7	222.5	
6.	+ CENT.		⟨34⟩			⟨480.0⟩		102" @ 0.002
7.	F, 1, 3-5, 6A 11, 12	154.4	28	3.06	0.77	364.2	239.3	
7.	+ CENT.		⟨34⟩			⟨512.6⟩		102" @ 0.002
8.	F, 1, 3-6, 11, 12	168.0	31	2.91	0.76	371.5	244.1	102" @ 0.002
8.	+ CENT		⟨35⟩			⟨546.1⟩		
9.	F, 3-7, 9, 11-13	411.0	32	2.86	0.70	822.8	540.6	
9.	+ CENT.		⟨35⟩			⟨1001.8⟩		10' x 10' CBC @ 0.002
10.	F, 3-9, 11-13	460.8	33	2.82	0.72	935.6	614.7	
10.	+ CENT		⟨36⟩			⟨1160.1⟩		10' x 10' CBC @ 0.002

* CENTRAL OVERLAND PEAK OCCURS AT t = 54 mins.

** SIZE SD FOR 250 CFS.

MANZANO MESA

INFRASTRUCTURE SIZING (OFF-SITE)

WITH M. MESA CONTRIBUTION. ESTIMATE 'A'

AP.	CONTRIB BASINS	TOTAL AREA (AC.)	COMPUTED TC (MIN.)	i_{100} (in/hr)	RATIONAL 'C'	Q100 (CFS)	Q10 (CFS)	STRUCTURE SIZE
11.	F, 3-9, 11-13 G.	504.8	37	2.66	0.72	966.8	635.2	
11.	+ CENT		⟨41⟩			⟨1176.9⟩		10'x10' CBC @ 0.002
12.	F, G, H, 3-9, 11-13	548.6	39	2.59	0.71	1008.8	662.8	
12	+ CENT		⟨43⟩			⟨1229.7⟩		10'x10' CBC @ 0.002
13.	F-I, 3-9 11-13	600.8	45	2.40	0.70	1009.3	663.1	
13.	+ CENT		⟨50⟩			⟨1247.1⟩		10'x10' CBC @ 0.005

MANZANO MESA

INFRASTRUCTURE SIZING

WITHOUT M. MESA CONTRIBUTION - ESTIMATE 'B'

AP.	CONTRIB BASINS	TOTAL AREA (AC.)	COMPUTED TC (min.)	i_{100} (in/hr)	RATIONAL 'C'	Q100 (CFS)	Q10 (CFS)	STRUCTURE SIZE
1.	CENTRAL EXCESS	247.0	54	2.19	0.62	330.0 <250.0>		84" @ 0.002
2.	CENTRAL + F	277.0	54	2.19	0.64	327.7		84"@0.002
11.	CENT, F G	321	58			335.5		90"@0.002
12	CENT, F G, H	364.8	58			348.7		90"@ 0.002
13	CENT, F-I	417.0	32			412.4		96" @ 0.002

MANZANO MESA
INFRASTRUCTURE SIZING (ON-SITE)

AP.	CONTRIB BASINS	TOTAL AREA (AC.)	COMPUTED TC (min.)	i_{100} (in/hr)	RATIONAL 'C'	Q100 (CFS)	Q10 (CFS)	STRUCTURE SIZE
3	1.	25.6	15	4.21	0.89	95.9	63.0	42" STUB
4	11, 12	19.7	32	2.87	0.95	53.7	35.3	30" SD + 2 As, 6, CCs
5	4	13.5	10	5.17	0.89	62.1	40.8	36" STUB
7	5	11.6	13	4.53	0.89	46.8	30.7	30" STUB
8	6b	13.6	13	4.53	0.75	46.2	30.4	30" STUB
10.	8	49.8	24	3.31	0.89	146.7	96.4	48" STUB
14.	2	38.5	19	3.73	0.89	127.8	84.0	48" STUB
16.	9a	119.8	29	3.00	0.65	233.6	153.5	54" SD + 8As, 16CCs
17.	9, 13, 7	243.1	29	3.00	0.65	474.0	311.4	72" SD + 2As 2CCs + SPEC INLET BOX
18	6a	41.1	13	4.53	0.75	139.6	91.7	48" SD + 6As, 8CCs

OFF-SITE HYDROLOGY

Taken From: AMDS RESTUDY
EXISTING CONDITIONS, PREPARED
BY BOHANNAN-HUSTON, INC.

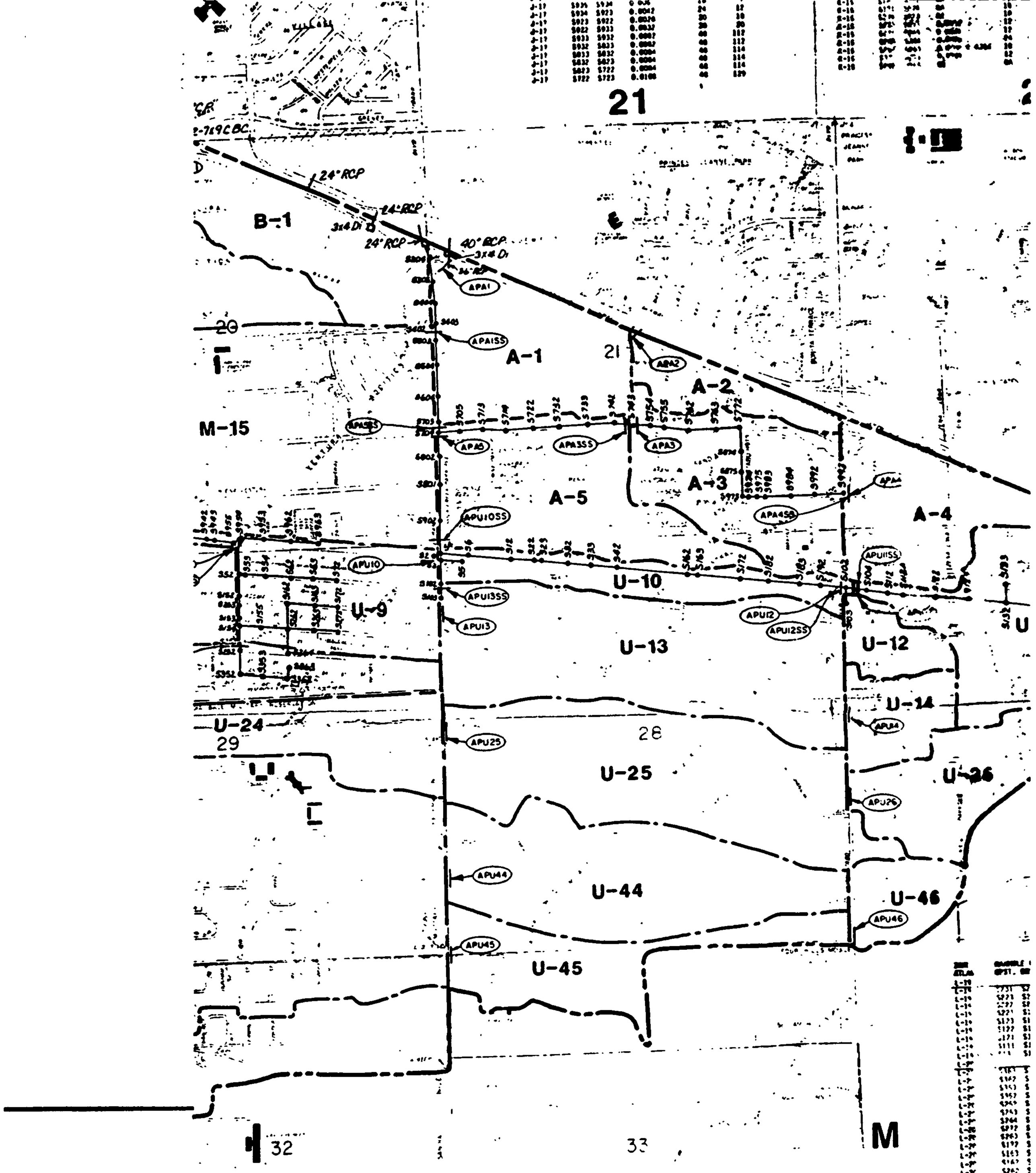

PE /FT)	INTER. SLOPE (FT/FT)	DIA. (IN)	CAPACITY (CFS)	PRESSURE FLOW (CFS)
1330		24	35	
1130		24	35	
[illegible]		24	42	

ZONE ATLAS	MANHOLE NO. UPST.	MANHOLE NO. DNST.	SLOPE (FT/FT)	INTER. SLOPE (FT/FT)	DIA. (IN)	CAPACITY (CFS)	PRESSURE FLOW (CFS)
L-17 (CONT.)							
L-17/L-1	S503	S502	0.0500		12	6	
L-17	A	B	0.0036		30	21	
L-17	B	C	0.0050		30	25	
L-17	[illegible]	[illegible]	[illegible]		66	194	

```
*
*
*ADD APU13-SS TO APU10
ADD HYD                    ID=36      HYD=APU10
                           ID=28      ID=35

*TOTAL FLOW AT APU10
PRINT HYD                  ID=36      CODE=10
```

HYDROGRAPH NUMBER APU10

TIME HRS	FLOW CFS	TIME HRS	FLOW CFS	TIME HRS	FLOW CFS
0.000	0.	1.875	60.	3.749	2.
0.208	0.	2.083	43.	3.958	1.
0.417	2.	2.291	28.	4.166	1.
0.625	47.	2.500	16.	4.374	0.
0.833	210.	2.708	10.	4.583	0.
1.041	230.	2.916	7.	4.791	0.
1.250	169.	3.124	5.	4.999	0.
1.458	114.	3.333	4.		
1.666	81.	3.541	3.		

```
RUNOFF VOLUME =        17.774 ACRE-FT
PEAK DISCHARGE RATE =        241.5 CFS
PEAK OCCURRED AT  0.96 HRS.
```

```
*
*
*DIVIDE SS AT APU10
DIVIDE HYD                 ID=36      Q=160
                           ID=37      HYD=APU10SS >P
                           ID=38      HYD=APU10OL >P

*APU10-OL
PRINT HYD                  ID=38      CODE=10
```

HYDROGRAPH NUMBER APU10OL>P

TIME HRS	FLOW CFS	TIME HRS	FLOW CFS	TIME HRS	FLOW CFS
0.000	0.	1.875	0.	3.749	0.
0.208	0.	2.083	0.	3.958	0.
0.417	0.	2.291	0.	4.166	0.
0.625	0.	2.500	0.	4.374	0.
0.833	50.	2.708	0.	4.583	0.
1.041	70.	2.916	0.	4.791	0.
1.250	9.	3.124	0.	4.999	0.
1.458	0.	3.333	0.		
1.666	0.	3.541	0.		

```
RUNOFF VOLUME =         2.139 ACRE-FT
PEAK DISCHARGE RATE =         81.5 CFS
PEAK OCCURRED AT  0.96 HRS.
```

```
*
*APU10-SS
PRINT HYD                  ID=37      CODE=10
```

HYDROGRAPH NUMBER APU10SS>P

TIME HRS	FLOW CFS	TIME HRS	FLOW CFS	TIME HRS	FLOW CFS
0.000	0.	1.875	60.	3.749	2.
0.208	0.	2.083	43.	3.958	1.
0.417	2.	2.291	28.	4.166	1.
0.625	47.	2.500	16.	4.374	0.
0.833	160.	2.708	10.	4.583	0.
1.041	160.	2.916	7.	4.791	0.
1.250	160.	3.124	5.	4.999	0.
1.458	114.	3.333	4.		
1.666	81.	3.541	3.		

```
PEAK DISCHARGE RATE =        160.0 CFS
PEAK OCCURRED AT  0.77 HRS.

*
*STORE APU10-SS FOR BASIN A RUN
PUNCH HYD                    ID=37
*
```

17050

RECEIVED
MAY 14 1990
Ans'd.....

CITY OF ALBUQUERQUE

ALBUQUERQUE, NEW MEXICO

INTER-OFFICE CORRESPONDENCE REF. NO.: WPHYD1759

May 11, 1990

TO: Scott Davis, Project Engineer

FROM: Gilbert Aldaz, City/County Floodplain Administrator

SUBJECT: JUAN TABO STORM DRAIN, PROJECT NO 3599

The purpose of this memorandum is to request two submittals of the above referenced project. The purpose of this submittal would be to request a Conditional Letter of Map Revision from the Federal Emergency Management Agency. The map revision would consist of removing the 100-year floodplains from Juan Tabo Boulevard to Eubank Boulevard, due to the proposed storm drain improvements.

I have reviewed the referenced drainage report and proposed construction plans, it appears there is sufficient detail to make this formal submittal. The submittal should include two current drainage reports and construction plans of improvements proposed to be built. Once the project is constructed, we will then be required to make a second submittal of as-built drawings to secure the actual Letter of Map Revision.

The reason it is important to submit at this time, is because the consultant is still under contract through construction; therefore, he could address any comments FEMA may have regarding the drainage report or construction plans.

xc: Dennis Lorenz, Espey Huston & Associates

GA
(wp+1759)

City of Albuquerque
P.O. BOX 1293 ALBUQUERQUE, NEW MEXICO 87103

November 13, 1992

Jeff Mortensen, P.E.
Jeff Mortensen & Assoc.
6010-B Midway Park Blvd. NE
Albuquerque, N.M. 87109

RE: DRAINAGE PLAN FOR TRACT A, MANZANO MESA (L-21/D37)
RECEIVED OCTOBER 15, 1992 FOR EASEMENT LIMITS
STAMPED & DATED 10-02-92

Dear Mr. Mortensen:

Based on the information included in the submittal referenced above, City Hydrology approves the 300' x 1300' easement. Grading a 30' wide swale would cause too much erosion and require a maintenace covenant. When the easement is marked on the plat, submit it to Fred Aguirre for his signature.

If I can be of further assistance, you may contact me at 768-2727

Sincerely,

John P. Curtin

John P. Curtin, P.E.
PWD/Hydrology

xc: Fred Aguirre

WPHYD+3772;jpc

CITY OF ALBUQUERQUE

ALBUQUERQUE, NEW MEXICO

INTER-OFFICE CORRESPONDENCE

REF. NO._____

February 28, 1991

TO: Louis E. Saavedra, Mayor

FROM: Robert E. Gurule, Director, Public Works Department REG

SUBJECT: NOTICE OF EMERGENCY RULE/RETENTION PONDING

At the request of Mr. Kevin Murphy, the Hydrology Division has prepared a Notice Of Emergency Rule for your consideration. The purpose of this Emergency Rule is to formalize the City's policy.

Under the City's policy, retention ponding is allowed on a temporary basis only. We have found that the permanent retention ponds, a policy of the 1970's, became mosquito breeding areas and quickly failed as they became clogged with silt. We remedied this by allowing retention ponding as a temporary solution until proper drainage facilities were installed.

The DPM Steering Committee has created a drainage sub-committee to look into the retention pond question. The committee consists of private and public engineers and one professor from the university. The members are:

Dr. Richard Heggen, Civil Engineering Professor, UNM
Chuck Easterling, P.E., Easterling & Associates, Inc.
Brian Burnett, P.E., Bohannan-Huston, Inc.
Dwayne Sheppard, P.E., Public Works Department
Bob Foglesong, P.E., Bernalillo County Public Works
Cliff E. Anderson, P.E., AMAFCA
Fred Aguirre, P.E., Public Works Department

With the issuance of this Emergency Rule, we can approve plans which require retention on a temporary basis without creating a burden on the development community or the City. This rule will serve until the drainage sub-committee recommendations are adopted by the DPM Steering Committee.

Concur:

Walter H. Nickerson, Jr., P.E.

Concur:

Daniel W. Hogan 3/1/91

Daniel W. Hogan, P.E.

xc: Kevin Murphy

FJA:REG/bsj

NOTICE OF EMERGENCY RULE

Pursuant to Article XI, Chapter 7 of the Revised Ordinances of Albuquerque, 1974:

I, Louis E. Saavedra, Mayor of the City of Albuquerque, have determined that there are urgent and compelling reasons to include certain rules in the Development Process Manual relating to the Minimum Standards for the design of Subdivisions.

This modification of rules is necessary to preclude possible inaccuracies and inconsistencies in the application of certain design criteria for the design of drainage management and flood control systems within the platting and planning jurisdiction of the City of Albuquerque.

I, therefore, declare that the following modifications to the Development Process Manual of the City of Albuquerque shall become effective immediately:

Volume II, of the Development Process Manual shall be modified as follows:

Chapter 22, page 7. Expand part C.3. to include the following:

All Detention ponds must be evacuated in 24 hours or less. Ponds that take more than six hours to drain will be designed for a 24 hour storm. Credit for evacuation by means of percolation will not be taken into account.

Retention ponds will only be permitted on a temporary basis and will only be allowed on a case by case basis as determined by the City Engineer. The criteria for temporary ponds may include but are not limited to the following:

Design of the pond volume will be based on a 100 year 10 day storm with no percolation credit for volume reduction;

The inclusion of an emergency spillway with the pond to carry the 100 year design flow which enters the pond;

The acceptance by the owner of maintenance responsibilities and legal liabilities of the pond;

Approval by the State Engineer if the pond comes under that agent's jurisdiction; and,

Fencing as required by the City Engineer.

Additional modifications may be incorporated into the next periodic update of the Development Process Manual.

For further information regarding this matter, contact the City Engineer at telephone number 768-2650 or by mail at City/County Government Center, One Civic Plaza, Public Works Department, Engineering Group, 3rd Floor, 87103.

LSaavedra

Louis E. Saavedra, Mayor

TO BE PUBLISHED IN THE ALBUQUERQUE JOURNAL AND ALBUQUERQUE TRIBUNE ON _____.
date

```
                    Haestad Methods FlowMaster I  version 3.13

ÄÄÄÄÄÄÄÄÄÄÄÄÄÄÄÄÄÄÄÄÄÄÄÄÄÄÄÄÄÄÄÄ Rectangular ÄÄÄÄÄÄÄÄÄÄÄÄÄÄÄÄÄÄÄÄÄÄÄÄÄÄÄÄÄÄÄÄ
³                                                                            ³
³                                                                            ³
³                                                                            ³
³  Comment: MANZANO MESA                                                     ³
³                                                                            ³
³  Solve For......Depth                                                      ³
³                                                                            ³
³  Bottom Width...      10.00 ft          Velocity........      7.43 fps    ³
³  Manning's n....       0.015            Flow Area.......    135.87 sf     ³
³  Channel Slope..       0.0010 ft/ft     Flow Top Width..     10.00 ft    ³
³  Depth..........      13.59 ft          Wetted Perimeter     37.17 ft    ³
³  Discharge......    1010.00 cfs         Critical Depth..      6.82 ft    ³
³                                          Critical Slope..      0.0054 ft/ft ³
³                                          Froude Number...      0.36       ³
³                                                                            ³
³                                                                            ³
³                                                                            ³
³                                                                            ³
ÀÄÄÄÄÄÄÄÄÄÄÄÄÄÄÄÄÄÄÄ
```

96101015 2A L-21

9128

QUITCLAIM DEED

The ALBUQUERQUE METROPOLITAN ARROYO FLOOD CONTROL AUTHORITY, a political subdivision of the State of New Mexico, for consideration paid, quitclaims to the CITY OF ALBUQUERQUE, a New Mexico Municipal Corporation, whose address is P.O. Box 1293, Albuquerque, New Mexico 87103, the following described real estate in Bernalillo County, New Mexico:

Certain Flood Plain Easements identified as 100 YEAR FLOOD PLAIN EASEMENT NO. 1, 100 YEAR FLOOD PLAIN EASEMENT NO. 2 and 100 YEAR FLOOD PLAIN EASEMENT NO. 3, as shown on the Replat For TRACTS A THROUGH J MANZANO MESA, being the same as shown and designated on the plat of said subdivision as filed in the Office of the County Clerk of Bernalillo County, New Mexico on June 5, 1991 in Volume 91C, folio 112 under Document Number 91044235.

Witness its hand and seal this 29 day of August, 1996.

GRANTOR: Albuquerque Metropolitan Arroyo Flood Control Authority

BY: Geneiva Meeker

Geneiva F. Meeker, Chair
Board of Directors

ATTEST: Ronald D. Brown

Ronald D. Brown, Secretary-Treasurer

STATE OF NEW MEXICO
COUNTY OF BERNALILLO
FILED
1996 SEP 11 PM 12: 11
BK 96 PG 9128
JUDY D. WOODWARD
CO. CLERK RECORDER

STATE OF NEW MEXICO)
)SS.
COUNTY OF BERNALILLO)

This instrument was acknowledged before me on Aug. 29, 1996 by Geneiva F. Meeker as Chair of the Board of Directors of Albuquerque Metropolitan Arroyo Flood Control Authority ("AMAFCA"), a political subdivision of the State of New Mexico, on behalf of AMAFCA.

My commission expires:
June 1, 1999
(SEAL)

Irene Jeffries
Notary Public

CITY OF
Albuquerque

P.O. Box 1293 Albuquerque, NM 87103

Martin J. Chávez, Mayor

September 19, 1996

Pat Conley, PE
Smith Engineering Company
6400 Uptown Blvd NE Suite 500E
Albuquerque, NM 87110

RE: MASTER PLAN DRAINAGE REPORT FOR MANZANO MESA (L-21/D37)
RECEIVED AUGUST 16, 1996 FOR FINAL PLAT (BULK LAND DIVISION)
ENGINEER'S STAMP DATED 8/6/96

Dear Mr. Conley:

Based on the information included in the submittal referenced above, City Hydrology accepts Drainage Report for Final Plat (Bulk Land Division).

If I can be of further assistance, You may contact me at 768-2727.

Sincerely,

John P. Curtin

John P. Curtin, P.E.
Civil Engineer, Hydrology

c: Andrew Garcia
Fred Aguirre, DRB 95-370

Smith Engineering Company

A Full Service Engineering Company

August 14, 1996

John P. Curtin, P.E.
City of Albuquerque
Hydrology Department
PO Box 1293
Albuquerque, NM 87103

RE: Manzano Mesa Master Drainage Plan
DRB Case Number 95-370
SEC # 195202-01B

Dear Mr. Curtin:

Smith Engineering Company (SEC) has reviewed your comments on the Manzano Mesa Master Drainage Plan. We have listed each of your comments with an appropriate response to each.

"*The off-site "SEASDA" basins are not shown on Plate 1 or any where else in the Report.*". All off-site basins within the AHYMO input file are shown in Appendix E, "Selective References from November 1995, South Eubank Area Storm Drainage Analysis (SEASDA). There are additional off-site basins that contribute to the new storm drain that are not in the AHYMO input file or shown in this report. These additional off-site basins contribute to the existing storm drain in Central Avenue, from east of Juan Tabo Boulevard. The AHYMO input file has incorporated the developed conditions, 6 hour - 100 year storm hydrograph at the Elizabeth Street and Central Avenue intersection; which includes the off-site basins east of Juan Tabo Boulevard.

"*Storm drain sizes and slopes on Plate 1 do no match the AHYMO analysis.*" SEC has corrected any discrepancies between the pipe sizes on Plate 1 and what is in the AHYMO analysis.

"*Justify the use of Land Treatment "A" for a developed area.*" Section 22.2 of the DPM, Table A-4, lists what are considered as Land Treatment A. In addition to undeveloped areas, "native grasses, weeds, and shrubs in typical densities with minimal disturbance to grading, ground cover and infiltration capacity and croplands", are included as Land Treatment A. SEC has consulted with Cliff Anderson, the author of AHYMO, and we have concluded using landscaping such as flower beds, shrubs, or gardens as Land Treatment A. After calculating the percent of Land Treatment D for residential property, typically twenty-five percent of the remainder area is proportioned to Land Treatment A.

6400 Uptown Boulevard N.E., Suite 500E, Albuquerque, New Mexico 87110 Telephone 505 / 884-0700 Fax 505 / 884-2376
Albuquerque, NM Roswell, NM Tempe, AZ

"*Clarify what shallow concentrated flow is on Table B-1.*" Shallow concentrate flow is a transition zone in the hydrologic overland flow path from sheet flow to flow that is heavily concentrated in a street or channel. A typical hydrologic basin has sheet flow for the first 400 feet of the upper most part of the basin. Shallow concentrated flow is from 400 feet to 2000 feet of the upper most part of the basin. The flow is assumed heavily concentrated after 2000 feet. We have included this information on page 8 of the Report.

"*What is the DRB number for this Plat?*" The DRB number for the sketch plat was 95-370. The number for final DRB plat approval should be the same as for the DRB sketch plat approval.

"*Which City Project will construct the Juan Tabo pond and storm drain?*" The official project name is Juan Tabo Detention Basin and the number is 4790.92. The construction should start at the beginning of November 1996.

If you have any further comments or questions, please do not hesitate to call me at 884-0700.

Sincerely,

Smith Engineering Company

Thomas Dalton, E.I.
Civil Engineering Intern

Smith Engineering Company

A Full Service Engineering Company

November 13, 1997

Mr. Loren Meinz, PE
Hydrology Division
COA Public Works Department
PO Box 1293
Albuquerque, New Mexico 87103

Re: Manzano Mesa Master Drainage Report
Modifications to Proposed Storm Drain Alignment
SEC #195202-01B

Dear Mr. Meinz:

Smith Engineering Company (SEC) is submitting this letter outlining the modifications which are made to the Manzano Mesa Master Drainage Plan dated August 1996 and prepared by SEC. Per discussions with Sandy Zuschlag, COA CIP, and Chris Green, Consensus Planning (CP), we are modifying the master drainage report as follows:

- A 20' drainage easement will be dedicated by COA CIP on the park tract, Tract 2, to allow for installation of a storm drain at a future date. This drain will remain as sized on the Master Drainage Plan.
- System "C" can be constructed in this 20' easement at a future date.

CP has contracted with Surveying Control, Inc. to prepare a paper easement for this drainage easement which will be filed with the City. SEC is forwarding a copy of Plate 1 to COA Hydrology, the COA Development Section, and Mr. Mortensen (APS engineer) for incorporation into the report. If you have any questions, please call me at 884-0700.

Sincerely,

Smith Engineering Company

Patrick J. Conley, PE
Project Manager

RECEIVED
NOV 14 1997
HYDROLOGY SECTION

cc: Jeff Mortensen
COA Development
File

C:\PJC\MANZANOMESA\REVISIONSTOMMMASTERDRAINAGEREPORTFORSYSTEMC

6400 Uptown Boulevard, N.E. Suite 500E Albuquerque, N. M. 87110 Telephone 505/884-0700 Fax 505/884-2376

MYERS & OLIVER
A PROFESSIONAL CORPORATION
LAWYERS
6400 UPTOWN BOULEVARD, N.E.
SUITE 300-WEST
ALBUQUERQUE, NEW MEXICO 87110

JOHN A. MYERS
SCOTT OLIVER*
KEVIN J. MCCREADY
*ALSO LICENSED IN TEXAS

TELEPHONE
(505) 889-4040

FACSIMILE
(505) 889-4025

March 3, 1993

Telefaxed
Councillor Michael Brasher
Albuquerque City Council
City/County Building
Albuquerque, New Mexico 87102

Re: Manzano Mesa

Dear Councillor Brasher:

Thank you for meeting with representatives of the Manzano Mesa Partnership and APS to discuss the access concerns of the Shaw Mobile Home Park. We understand that we will proceed as follows:

1. The City will begin work on placing a traffic signal at Gibson and Eubank and the necessary related modifications to Eubank. We will support the City's efforts.

2. The City and APS will try to work out a temporary alternative access from the mobile home park to Eubank.

3. You will not pursue adoption of your bill freezing development of the Manzano Mesa property.

APS has expressed a willingness to work with the City on the temporary easement subject to the following concerns:

1. APS is owed deeds from the City on some vacated rights-of-way which APS needs to receive;

2. APS will bear no expense for construction or maintenance of a temporary access road;

3. APS must be indemnified from liabilities resulting from use of the temporary access road; and

4. APS must have the unilateral right to terminate the easement in the event the easement impairs its or Manzano Mesa's right to use, sell, or develop their property.

The Manzano Mesa Partnership needs to approve the easement and shares APS's concerns.

It appears that the best solution is to grant the temporary easement over the property presently being used as a road. Manzano Mesa Partnership is proceeding with its development and is constructing a drainage channel across the existing road which is necessitating barricading the existing road.

Perhaps the City Engineering Department should decide what would be an appropriate manner for the road to cross the channel. The Manzano Mesa Partnership is evaluating the feasibility of modifying its drainage pond so that it will not interfere with the existing road.

We look forward to working with you towards a satisfactory resolution of this problem.

Sincerely,

MYERS & OLIVER
A Professional Corporation

By: _____
John A. Myers

JAM:klw
cc: Don Peterson, Esq.
Mr. Charles Haegelin
Mr. Stan Strickman
Ms. Geneva Mitchell, Shaw Mobile Home Park
Mr. Rick Beltramo
Mr Chuck Atwood

93039952

FILED WITH CITY CLERK'S OFFICE
4/21/93
9256

ADDENDUM #1

TO THE SUBDIVISION IMPROVEMENTS AGREEMENT 2253
FOR MANZANO MESA/AGREEMENT TO CONSTRUCT
AND GUARANTEE PUBLIC IMPROVEMENTS
Project #4231.80

THIS ADDENDUM amends the Subdivision Improvements Agreement for Manzano Mesa dated May 22, 1991 and is made this 22nd day of April, 1992 by and between the City of Albuquerque, New Mexico ("City"), a municipal corporation, whose address is P.O. Box 1293, Albuquerque, New Mexico 87103 and Albuquerque Public Schools ("APS"), New Mexico Municipal School District #12, whose address is P.O. Box 25704, Albuquerque, New Mexico 87102, is made in Albuquerque, New Mexico, and is entered into as of the date of final execution of this agreement.

1. Recital

WHEREAS APS and the City have previously entered into a Subdivision Improvements Agreement dated May 22, 1991 regarding improvements for the Manzano Mesa Subdivision, and

WHEREAS the City requires an additional agreement regarding storm drainage improvements related to development of Manzano Mesa prior to approving a plat for major subdivision, and

WHEREAS the additional improvements can best be agreed to in an addendum to the original agreement dated May 22, 1991 so that all other provisions of the original agreement may still apply, and now therefore the City and APS agree as follows:

2. Improvements and Responsibility

A. At the earliest of either the construction of the City's Eubank Storm Drain System (AMDS Project 2-03-18) or the paving of Elizabeth Street due to APS' development of adjacent property, APS will bear the cost and responsibility for the construction of that portion of the Elizabeth Street storm drain system (as identified in the approved Drainage Master Plan for Manzano Mesa) between Eubank Boulevard and the Park site (Tract F, Manzano Mesa Replat).

B. Until such time as the Eubank and Elizabeth storm drains are in place, a temporary retention pond will be located in Tract F, (which will be wholly owned by Albuquerque Public Schools, having been traded for Tract J, to be owned by the City of Albuquerque) said pond to be constructed by the subdivision developer at the time of development. APS, as a public entity, agrees to accept responsibility for the maintenance of the pond, until such time as it is no longer needed due to the Eubank and Elizabeth storm drain systems availability for use. APS further agrees to accept responsibility for the reclamation of the pond site to consist of grading the site to match the original grade (prior to pond excavation).

3. Entire Addendum

This addendum contains the entire addendum to the agreement of the parties and supersedes any and all other agreements or understandings, oral or written, whether previous to the execution hereof or contemporaneous herewith.

4. Terms of Original Agreement/Severability

All other terms and conditions of the original agreement dated May 22, 1991 still apply. If any part of this Addendum is held to be invalid or unenforceable, the remainder of the Addendum and the original Agreement will remain valid and enforceable if the remainder is reasonably capable of completion.

STATE OF NEW MEXICO
COUNTY OF SANDOVAL
FILED IN MY OFFICE
93 APR 21 AM 10: 49
93-9 9253
9255

Executed on the date stated in the first paragraph of this Addendum. 9255

ALBUQUERQUE PUBLIC SCHOOLS

By [Signature]: [signature]
Name: Richard Toledo
Title: Deputy Superintendent
Dated: 12/9/92

CITY OF ALBUQUERQUE

[signature]
Arthur A. Blumenfeld
Chief Administrative Officer
Dated: 4-20-93

Approved by:
[signature] 4/20/93
[signature] 4/13/93
Director of Public Works
[signature] 4/13/93

APS' NOTARY

STATE OF NEW MEXICO)
) SS.
COUNTY OF BERNALILLO)

The foregoing instrument was acknowledged before me on this 9th day of December, 1992, by Richard Toledo, Deputy Superintendent, of Albuquerque Public Schools.

[signature]
Notary Public

My Commission Expires:
7/30/95

CITY'S NOTARY

STATE OF NEW MEXICO)
) SS.
COUNTY OF BERNALILLO)

The foregoing instrument was acknowledged before me on this 21st day of April, 1993, by ROBERT E. GURULE IV, Chief Administrative Officer of the City of Albuquerque, a municipal corporation, on behalf of said corporation.

[signature]
Notary Public

My Commission Expires:
8-1-93

CITY OF
Albuquerque
P.O. Box 1293 Albuquerque, NM 87103

July 25, 1996

Martin J. Chávez, Mayor

Pat Conley, PE
Smith Engineering Company
6400 Uptown Blvd NE Suite 500E
Albuquerque, NM 87110

RE: MASTER PLAN DRAINAGE REPORT FOR MANZANO MESA (L-21/D37)
RECEIVED JULY 3, 1996 FOR FINAL PLAT (BULK LAND DIVISION)
ENGINEER'S STAMP DATED 7/2/96

Dear Mr. Conley:

Based on the information included in the submittal referenced above, City Hydrology has the following comments:

The AHYMO analysis is very confusing. The off-site "SEASDA" basins are not shown on Plate 1 or any where else in the Report. This makes the off-site analysis hard to visualize. Storm drain sizes & slopes on Plate 1 do not match the AHYMO analysis. Justify the use of Land Treatment "A" for a developed area. Clarify what shallow concentrated flow is on Table B-1.

What is the DRB number for this Plat? Which City Project will construct the Juan Tabo pond & storm drain?

If you have any questions about this project, You may contact me at 768-2727.

Sincerely,

John P. Curtin

John P. Curtin, P.E.
Civil Engineer, Hydrology

c: Andrew Garcia
Fred Aguirre, DRB ??? 95-370

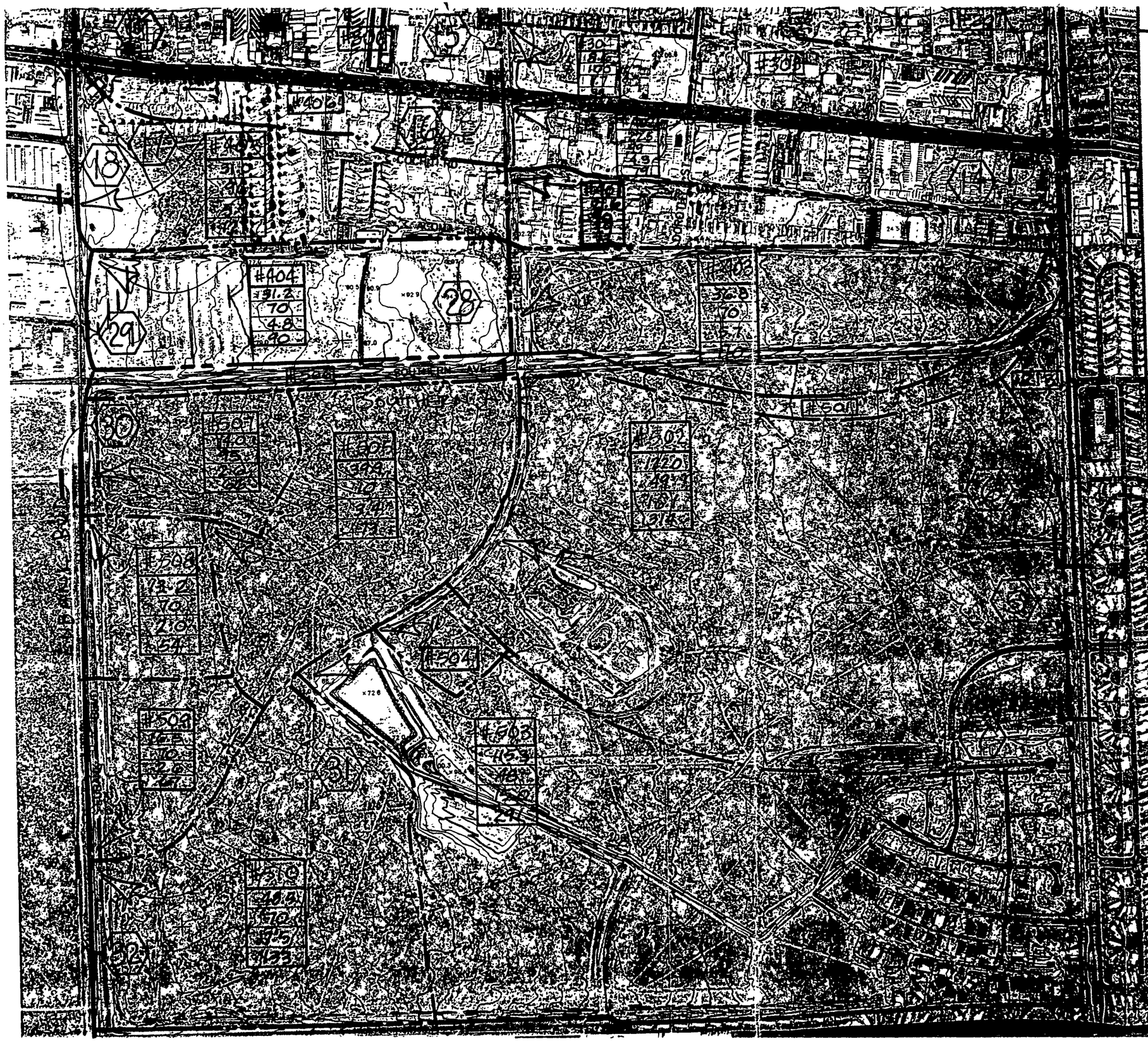

NOTES

LEGEND EXHIBIT OF BASIN #401

34 — ANALYSIS POINT NUMBER WITH LOCATION BAR

STUDY BOUNDARY

BASIN BOUNDARY

SUB-BASIN BOUNDARY

SUB-BASIN NUMBER
AREA (ACRES)
% IMPERVIOUS
100-YEAR RUNOFF VOLUME (AC-FT)
100-YEAR PEAK RUNOFF FLOW (CFS)

SUB-BASIN DATA

DRAINAGE BASIN MAP

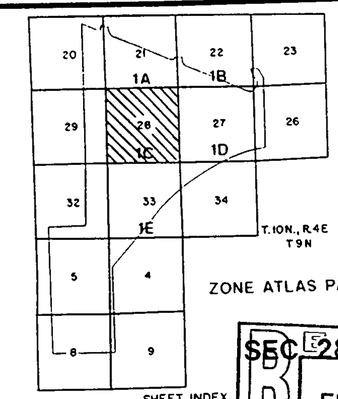

N

1"=500'

2 CONTOUR INTERVAL

ZONE ATLAS PAGE L-21

SEC 28

RECEIVED FEB 17 2000 TRANSPORTATION SECTION

THE AERIAL PHOTOGRAPH ON THIS SHEET HAS BEEN RECTIFIED TO SELECTED PLANIMETRIC DETAIL OBTAINED DURING MAP COMPILATION. CONSEQUENTLY THE PHOTO IMAGES FALLING OUTSIDE OF THE MAPPING AREA ARE UNCONTROLLED

500 250 0 500 1000

DATE OF PHOTOGRAPHY: MARCH 2, 1994

PROJ # 4790

SOUTH EUBANK AREA STORM DRAINAGE ANALYSIS

89-01-08

Smith Engineering Company

A Full Service Engineering Company

6400 Uptown Boulevard, N.E. Suite 500E Albuquerque, New Mexico 87110

MAP L-21 | 1C

```
DIVIDE HYD          DIVTOM.1   23   71        .11138       125.00      11.981      2.01693    1.467    1.754
                      209.13  AND   24        .01441       100.22       1.550      2.01693    1.567   10.869
*S ROUTE DIVTOM.1 THRU 210 IN 48" AND 54" PIPE
*S Q(CAP) = 208 CFS, AT SLOPE=0.013
```

COMMAND	HYDROGRAPH IDENTIFICATION	FROM ID NO.	TO ID NO.	AREA (SQ MI)	PEAK DISCHARGE (CFS)	RUNOFF VOLUME (AC-FT)	RUNOFF (INCHES)	TIME TO PEAK (HOURS)	CFS PER ACRE	NOTATION
										PAGE = 2
ROUTE	DIVTOM.12	71	72	.11138	125.00	11.981	2.01689	1.766	1.754	
*S ROUTING 209.13 THRU 210 ON TOMLINSON DRIVE TO OUTFALL										
ROUTE	207C.12	24	22	.01441	65.76	1.550	2.01728	1.633	7.131	
COMPUTE NM HYD	203.00	-	21	.08386	172.02	8.709	1.94717	1.600	3.205	PER IMP= 75.0
*S DIVIDE SOUTH SIDE CENTRAL AVENUE BETWEEN MH# S-132 AND MH# S-262(CHECK TO S										
*S**** OLF HYD 203.03 IS AP #10 *****										
DIVIDE HYD	CB5	21	24	.00444	1.00	.461	1.94716	.967	.352	
	203.03	AND	25	.07942	171.02	8.247	1.94716	1.600	3.365	
*S**** PIPE HYD CB5.1 IS AP #10 *****										
ADD HYD	CB5.1	24&11	21	.05584	62.00	6.500	2.18245	1.367	1.735	
*S FROM MH# S-102 TO MH# S-132										
*S Q(CAP) = 73 CFS										
ROUTE	CB5.12	21	27	.05584	62.00	6.500	2.18245	1.966	1.735	
*S ROUTING 203.03 THRU 204 ON CENTRAL AVENUE'S SOUTH SIDE										
ROUTE	203.02	25	23	.07942	152.20	8.248	1.94723	1.667	2.995	
COMPUTE NM HYD	204.00	-	21	.06581	141.97	7.399	2.10798	1.600	3.371	PER IMP= 86.0
ADD HYD	204.10	23&21	24	.14523	287.70	15.646	2.02007	1.633	3.095	
*S DIVIDE SOUTH SIDE CENTRAL AVENUE BETWEEN MH# S-102 AND MH# S-123										
*S OLF HYD 204.13 IS AT JUAN TABO AND CENTRAL ON THE SOUTH SIDE										
*S**** OLF HYD 204.13 IS AP #14 *****										
DIVIDE HYD	CB6	24	25	.10358	117.00	11.160	2.02007	1.467	1.765	
	204.13	AND	86	.04164	170.70	4.486	2.02007	1.633	6.405	
ADD HYD	CB6.1	27&25	21	.15943	179.00	17.660	2.07694	1.966	1.754	
*S TOTAL PIPE FLOW AT JUAN TABO AND CENTRAL										
*S Q(CAP) AT MH# S-102 IS 260 CFS										
*S**** PIPE HYD CB6.2 IS AP #13 AND AP #14 *****										
ADD HYD	CB6.2	14&21	99	.20518	278.00	22.793	2.08297	1.766	2.117	
COMPUTE NM HYD	205.00	-	21	.01633	43.64	1.651	1.89569	1.500	4.175	PER IMP= 71.0
*S ROUTING 205 THRU 206 ON JUAN TABO STREET										
ROUTE	205.02	21	23	.01633	36.77	1.651	1.89570	1.567	3.519	
COMPUTE NM HYD	206.00	-	24	.01425	38.20	1.550	2.03920	1.500	4.189	PER IMP= 81.0
ADD HYD	206.10	23&24	21	.03058	73.94	3.201	1.96254	1.533	3.778	
*S DIVIDE OLF HYD 206.1 AT MH# S-592										
*S PIPE HYD 206.13 GOES TO PROPOSED SURGE POND										
DIVIDE HYD	CB18	21	27	.02644	42.00	2.768	1.96254	1.433	2.482	
	206.13	AND	28	.00414	31.94	.433	1.96254	1.533	12.068	
*S FROM MH# S-791 TO MH# S-592										
*S Q(CAP) = 48 CFS										
ROUTE	CB18.02	27	29	.02644	41.97	2.768	1.96256	1.700	2.480	
*S**** SUB-BASIN 208 IS AP #5 *****										
COMPUTE NM HYD	208.00	-	24	.09685	190.67	9.850	1.90704	1.600	3.076	PER IMP= 72.0
*S DIVIDE SUB-BASIN 208 AT MH# S-692										
DIVIDE HYD	CB19	24	27	.09400	161.00	9.561	1.90703	1.533	2.676	
	208.03	AND	21	.00285	29.67	.290	1.90703	1.600	16.269	
*S ROUTING 208.03 THRU 208 ON JUAN TABO STREET										
ROUTE	208.02	21	24	.00285	22.63	.290	1.90884	1.667	12.411	
*S TOTAL PIPE FLOW AT MH# S-691										
ADD HYD	CB19.1	27&29	23	.12045	202.97	12.329	1.91922	1.700	2.633	
*S DIVIDE PIPE HYD CB19.1 BY 36" INLET PIPE AT MH# S-691										
DIVIDE HYD	CB19.13	23	91	.06513	55.00	6.666	1.91922	1.400	1.320	
	DET.5	AND	92	.05532	147.97	5.662	1.91922	1.700	4.179	
*S TOTAL INFLOW TO DETENTION POND IN SUB-BASIN 502										
ADD HYD	DET.502	28&92	21	.05945	178.96	6.095	1.92223	1.533	4.703	
*S FROM MH# S-691 TO MH# S-792										
*S Q(CAP) = 47 CFS										
ROUTE	CB19.12	91	23	.06513	55.00	6.666	1.91922	1.467	1.320	
*S TOTAL PIPE FLOW AT MH# S-792										
ADD HYD	CB19.2	23&24	28	.06798	77.63	6.956	1.91878	1.667	1.784	
*S FROM MH# S-94(OUTFALL) TO MH# S-792										
*S Q(CAP) = 94 CFS										
ROUTE	CB19.12	28	29	.06798	71.89	6.956	1.91878	1.700	1.652	
COMPUTE NM HYD	207.00	-	23	.03038	70.01	2.857	1.76351	1.533	3.601	PER IMP= 63.0
*S ROUTE 207 THRU 210 IN PROPOSED 48" PIPE										
*S Q(CAP) = 76 CFS, AT SLOPE=0.0033										
ROUTE	207.02	23	71	.03038	66.41	2.857	1.76351	1.567	3.415	
COMPUTE NM HYD	210.00	-	24	.02613	51.48	2.153	1.54525	1.533	3.078	PER IMP= 47.0
ADD HYD	210.10	24&22	23	.04054	108.40	3.703	1.71298	1.633	4.178	
*S DIVIDE OLF HYD 210.1 BY PROPOSED TOMLINSON PIPE NETWORK										
*S**** OLF HYD 210.13 IS AP #3 *****										
DIVIDE HYD	DIVTOM.2	23	74	.03129	50.00	2.858	1.71298	1.500	2.497	
	210.13	AND	22	.00925	58.40	.845	1.71298	1.633	9.865	
*S ROUTING 210.13 THRU 211 ON TOMLINSON DRIVE TO OUTFALL										

COMMAND	HYDROGRAPH IDENTIFICATION	FROM ID NO.	TO ID NO.	AREA (SQ MI)	PEAK DISCHARGE (CFS)	RUNOFF VOLUME (AC-FT)	RUNOFF (INCHES)	TIME TO PEAK (HOURS)	CFS PER ACRE	NOTATION
ROUTE	210.12	22	27	.00925	48.56	.845	1.71354	1.667	8.203	
ADD HYD	DIVTOM.3	74&72	73	.14267	175.00	14.840	1.95024	1.766	1.917	
ADD HYD	207.10	73&71	72	.17305	241.10	17.697	1.91746	1.567	2.177	
*S ROUTE 207.1 THRU 211 IN 60" PIPE										
*S Q(CAP) = 263 CFS, AT SLOPE=0.0118										
ROUTE	211.12	72	73	.17305	240.14	17.697	1.91745	1.567	2.168	
COMPUTE NM HYD	211.00	-	23	.06408	110.04	5.340	1.56261	1.600	2.683	PER IMP= 48.0
*S TOTAL OLF AT TOMLINSON OUTFALL										
*S**** OLF HYD 211.1 IS AP #4 ****										
ADD HYD	211.10	23&27	22	.07333	151.89	6.186	1.58163	1.633	3.236	
*S TOTAL FLOW AT TOMLINSON OUTFALL										
ADD HYD	211.20	22&73	25	.24638	386.68	23.882	1.81750	1.633	2.452	
COMPUTE NM HYD	212.00	-	22	.05122	111.55	5.313	1.94479	1.567	3.403	PER IMP= 74.0
*S DIVIDE SUB-BASIN 212 BETWEEN MH# S-94(OUTFALL) AND MH# S-791										
*S**** OLF HYD 212.03 IS AP #8 *****										
DIVIDE HYD	CB20	22	24	.04540	69.80	4.709	1.94478	1.467	2.402	
	212.03	AND	27	.00582	41.75	.604	1.94478	1.567	11.210	
*S TOTAL FLOW IN THE "EXISTING" JUAN TABO STORM DRAIN SYSTEM										
*S**** PIPE HYD CB20.1 IS AP #8 *****										
ADD HYD	CB20.1	24&29	22	.11338	141.69	11.665	1.92919	1.700	1.953	
*S JUAN TABO ROAD, SOUTH OF CENTRAL										
COMPUTE NM HYD	213.00	-	24	.00828	18.50	1.021	2.31187	1.633	3.490	PER IMP= 100.0
COMPUTE NM HYD	301.00	-	31	.05794	99.24	5.468	1.76955	1.633	2.676	PER IMP= 62.0
*S FROM MH# S-973 TO MH# S-993 IN BEUENA VENTURA STREET										
*S Q(CAP) = 306 CFS ; 60" @ S=0.016										
ROUTE	CB3.02	17	32	.14318	300.07	14.955	1.95848	1.533	3.275	
*S OLF HYD 108.13 THRU 301 ON BEUENA VENTURA STREET										
ROUTE	108.12	18	13	.00155	10.60	.163	1.96180	1.600	10.650	
ADD HYD	301.10	13&31	33	.05949	105.85	5.631	1.77455	1.600	2.780	
*S HYD 301.13 IS TOTAL OLF AT JANE AND BEUENA VENTURA										
*S**** OLF HYD 301.13 IS AP #20 *****										
DIVIDE HYD	CB8	33	34	.05334	70.00	5.048	1.77455	1.533	2.051	
	301.13	AND	35	.00616	35.85	.583	1.77455	1.600	9.099	
ADD HYD	CB8.1	34&32	36	.19651	370.07	20.003	1.90856	1.533	2.942	
*S FROM MH# S-772 TO MH# S-973 IN JANE STREET										
*S Q(CAP) = 356 CFS ; 66" @ S=0.013										
ROUTE	CB8.12	36	31	.19651	369.48	20.003	1.90856	1.567	2.938	
*S OLF HYD 301.13 THRU 302 ON JANE STREET										
ROUTE	301.12	35	32	.00616	27.09	.583	1.77539	1.700	6.876	
COMPUTE NM HYD	302.00	-	33	.02999	51.08	2.830	1.76916	1.633	2.661	PER IMP= 63.0
*S DIVIDE BETWEEN MH# S-772 AND MH# S-973										
DIVIDE HYD	CB9	32	35	.00616	27.09	.583	1.77525	1.700	6.876	
	301.16	AND	36	.00000	.00	.000	.00000	-.033	.000	
*S DIVIDE SUB-BASIN OLF 302 BY MAXIMUM CB INFLOW AT JANE AND CHICO										
*S DIVIDE AT MH# S-772										
DIVIDE HYD	CHICO.CB	33	81	.02118	20.00	1.999	1.76915	1.467	1.475	
	302.03	AND	82	.00881	31.08	.831	1.76915	1.633	5.513	
ADD HYD	CB9.1	31&35	34	.20267	383.78	20.586	1.90451	1.633	2.959	
*S TOTAL PIPE FLOW AT CHICO AND JANE										
ADD HYD	CB9.1	34&81	83	.22385	403.78	22.585	1.89170	1.633	2.818	
*S ROUTING HYD CB9.1 FOR PROPOSED 84" IN JANE STREET NORTH OF CHICO ROAD										
*S Q(CAP) = 398 CFS ; 84" @ S=0.0045 FT/FT ; N=0.014										
ROUTE	CB9.12	83	31	.22385	401.93	22.585	1.89170	1.633	2.805	
*S ROUTING HYD CB9.12 FOR PROPOSED 66" PARALLEL TO FREEWAY										
*S Q(CAP) = 418 CFS ; 66" @ S=0.018										
ROUTE	CHICO.DIV	31	71	.22385	398.79	22.585	1.89170	1.633	2.784	
*S**** OLF HYD 302.1 IS AP #21 *****										
ADD HYD	302.10	82&36	34	.00881	31.08	.831	1.76915	1.633	5.513	
ROUTE	302.12	34	32	.00881	26.48	.831	1.76973	1.733	4.698	
COMPUTE NM HYD	303.00	-	33	.08070	128.69	7.616	1.76955	1.700	2.492	PER IMP= 62.0
ADD HYD	303.10	33&32	34	.08951	154.81	8.447	1.76955	1.700	2.702	
*S DIVIDE BETWEEN MH# S-743 AND MH# S-772 BY CB CAPACITY										
*S**** PIPE HYD CB10 IS AP #22 *****										
DIVIDE HYD	CB10	34	35	.07372	85.00	6.957	1.76955	1.533	1.802	
	303.13	AND	33	.01579	69.81	1.490	1.76955	1.700	6.907	
*S FROM MH# S-704 TO MH# S-743 IN CHICO ROAD										
*S Q(CAP) = 216 CFS										
ROUTE	CB10.12	35	36	.07372	85.00	6.957	1.76956	1.966	1.802	
COMPUTE NM HYD	304.00	-	31	.01342	39.16	1.655	2.31187	1.533	4.559	PER IMP= 100.0
ROUTE	304.03	31	32	.01342	28.02	1.655	2.31189	1.600	3.262	
COMPUTE NM HYD	305.00	-	31	.03919	64.44	3.290	1.57396	1.633	2.569	PER IMP= 49.0

FILE = EUBSDC.SUM

COMMAND	HYDROGRAPH IDENTIFICATION	FROM ID NO.	TO ID NO.	AREA (SQ MI)	PEAK DISCHARGE (CFS)	RUNOFF VOLUME (AC-FT)	RUNOFF (INCHES)	TIME TO PEAK (HOURS)	CFS PER ACRE	NOTATION
ADD HYD	305.10	31&32	35	.05261	92.16	4.944	1.76216	1.600	2.737	
*S TOTAL OLF AT CHICO AND MORRIS										
*S**** OLF HYD 305.2 IS AP #22 *****										
ADD HYD	305.20	35&33	32	.06840	156.37	6.435	1.76386	1.667	3.572	
ROUTE	305.22	32	33	.06840	127.02	6.435	1.76387	1.766	2.902	
COMPUTE NM HYD	306.00	-	31	.03441	83.70	4.243	2.31187	1.600	3.801	PER IMP= 100.0
*S ROUTING SUB-BASIN 306 THRU 308 (THRU WALL BETWEEN BASIN 306 AND 308)										
ROUTE	306.03	31	32	.03441	74.97	4.243	2.31187	1.667	3.404	
*S SUB-BASIN 307 PONDS										
COMPUTE NM HYD	307.00	-	34	.02937	64.35	2.258	1.44180	1.500	3.423	PER IMP= 40.0
COMPUTE NM HYD	308.00	-	31	.08051	133.77	6.512	1.51655	1.600	2.596	PER IMP= 45.0
ADD HYD	308.10	31&32	35	.11492	205.71	10.755	1.75468	1.633	2.797	
*S EXISTING DETENTION BASIN IN BASIN 308										
*S ROUTING RESERVOIR WITH 36" ORIFICE										
*S**** PIPE FLOW 308.RES IS AP #23 *****										
ROUTE RESERVOIR	308.RES	35	39	.11492	69.84	10.755	1.75468	2.100	.950	AC-FT= 4.46
*S										
*S OUTFLOW(CFS) STORAGE(AC-FT) ELEV(FT)										
*S 0 0 5456										
*S 19 0.09 5458										
*S 48 1.25 5460										
*S 69 4.09 5462										
*S 83 10.36 5464										
*S										
COMPUTE NM HYD	309.00	-	31	.01291	29.71	1.064	1.54525	1.500	3.596	PER IMP= 47.0
ADD HYD	309.10	33&31	32	.08131	137.75	7.499	1.72914	1.766	2.647	
*S DIVIDE BY CB CAPACITY ON CHICO STREET BETWEEN MH# S-704 TO MH# S-743										
*S OLF HYD 309.13 IS AT CHICO AND EUBANK										
*S**** OLF HYD 309.13 IS AP #24 *****										
DIVIDE HYD	CB11	32	33	.04222	30.00	3.894	1.72914	1.433	1.110	
	309.13	AND	37	.03909	107.75	3.605	1.72914	1.766	4.307	
ADD HYD	CB11.1	33&36	38	.11594	115.00	10.851	1.75483	1.966	1.550	
*S TOTAL PIPE FLOW AT CHICO AND EUBANK FROM THE CHICO SYSTEM										
*S**** PIPE HYD CB11.2 IS AP #24 *****										
ADD HYD	CB11.2	38&39	32	.23086	184.59	21.606	1.75476	1.966	1.249	
COMPUTE NM HYD	310.00	-	38	.05825	145.16	6.710	2.15990	1.567	3.894	PER IMP= 90.0
COMPUTE NM HYD	311.00	-	39	.10616	208.97	11.041	1.95009	1.633	3.076	PER IMP= 75.0
COMPUTE NM HYD	312.00	-	33	.02461	71.05	2.756	2.09963	1.500	4.511	PER IMP= 85.0
*S BASIN 400 IS SOUTH OF CENTRAL										
COMPUTE NM HYD	401.00	-	41	.03371	73.42	3.928	2.18485	1.633	3.403	PER IMP= 90.0
COMPUTE NM HYD	402.00	-	42	.03516	76.91	4.315	2.30112	1.633	3.418	PER IMP= 99.0
*S OLF HYD 103.13 THRU 303 AND 304 ON NORTH SIDE OF CENTRAL STREET										
ROUTE	103.12	15	43	.01204	49.25	1.351	2.10442	1.667	6.390	
*S OLF HYD 204.13 THRU 402 ON SOUTH SIDE CENTRAL STREET										
ROUTE	204.12	86	44	.04164	115.32	4.487	2.02019	1.766	4.327	
ADD HYD	402.10	42&44	45	.07680	181.32	8.802	2.14877	1.733	3.689	
*S DIVIDE BY CB ON NORTH SIDE CENTRAL STREET BETWEEN MH# S-42 AND MH# S-102										
*S OLF HYD 103.13 IS FLOW ON CENTRAL'S NORTH SIDE AT ELIZABETH AND CENTRAL										
*S**** OLF HYD 103.13 IS AP #15 *****										
DIVIDE HYD	CB14	43	42	.01168	42.00	1.310	2.10432	1.633	5.620	
	103.13	AND	44	.00037	7.25	.041	2.10432	1.667	30.987	
*S DIVIDE BY CB ON SOUTH SIDE CENTRAL STREET BETWEEN MH# S-42 AND MH# S-102										
*S OLF HYD 402.13 IS CENTRAL'S TOTAL SOUTH SIDE FLOW AT ELIZABETH AND CENTRAL										
*S**** OLF HYD 402.13 IS AP #16 *****										
DIVIDE HYD	CB15	45	46	.04224	49.00	4.841	2.14877	1.500	1.812	
	402.13	AND	47	.03456	132.32	3.961	2.14877	1.733	5.982	
*S FROM MH# S-42 TO MH# S-102										
*S Q(CAP) = 276 CFS										
ROUTE	CB6.22	99	43	.20518	277.94	22.793	2.08298	1.766	2.117	
ADD HYD	CB14.1	42&43	45	.21685	319.72	24.104	2.08412	1.700	2.304	
*S TOTAL PIPE FLOW AT CENTRAL AND ELIZABETH										
*S**** PIPE HYD CB15.1 IS AP #15 AND AP #16 *****										
ADD HYD	CB15.1	45&46	42	.25909	368.72	28.945	2.09466	1.700	2.224	
*S TOTAL PIPE FLOW AT ELIZABETH AND COCHITI										
ADD HYD	401.1CB	42&41	71	.29280	441.03	32.873	2.10505	1.633	2.353	
*S ROUTE PIPE HYD "401.1CB" THRU 403 IN 78" PIPE ON ELIZABETH STREET TO SOUTHERN										
*S Q(CAP) = 430 CFS, AT N=0.014 AND SLOPE=0.0072										
ROUTE	401.12CB	71	72	.29280	437.08	32.873	2.10505	1.667	2.332	
*S OLF HYD 103.13 THRU 304 ON NORTH SIDE CENTRAL STREET; BETWEEN EUBANK AND ELIZ										
ROUTE	103.12	44	46	.00037	1.17	.041	2.11845	1.700	5.023	
*S OLF HYD 402.13 THRU 402 ON SOUTH SIDE CENTRAL STREET; BETWEEN EUBANK AND ELIZ										
ROUTE	402.12	47	42	.03456	109.12	3 961	2.14892	1.833	4.933	

COMMAND	HYDROGRAPH IDENTIFICATION	FROM ID NO.	TO ID NO.	AREA (SQ MI)	PEAK DISCHARGE (CFS)	RUNOFF VOLUME (AC-FT)	RUNOFF (INCHES)	TIME TO PEAK (HOURS)	CFS PER ACRE	NOTATION
COMPUTE NM HYD	403.00	-	41	.05744	110.01	5.677	1.85327	1.600	2.992	PER IMP= 70.0
COMPUTE NM HYD	404.00	-	44	.04882	89.80	4.825	1.85327	1.633	2.874	PER IMP= 70.0
*S **** SUB-BASIN 405B ****										
*S ** EASTERN HALF OF OLD BASIN 405 ****										
COMPUTE NM HYD	405B	-	90	.02687	74.78	3.107	2.16836	1.533	4.349	PER IMP= 90.0
*S ROUTE 405B THRU BASIN 404 IN FUTURE DRAINAGE CHANNEL ***										
*S FUTURE DRAINAGE CHANNEL TO BE LOCATED ON NORTH EDGE OF BASIN 404 ***										
ROUTE	R.405B	90	91	.02687	74.45	3.107	2.16837	1.533	4.330	
*S ADD SUB-BASIN 404 TO R.405B - NEW AP-298 ***										
ADD HYD	AP.298	91&44	92	.07569	153.44	7.933	1.96511	1.567	3.168	
*S ROUTE AP.298 THROUGH PROPOSED 404 POND AT NW CORNER OF BASIN 404										
ROUTE RESERVOIR	404POND	92	44	.07569	104.30	7.933	1.96511	1.766	2.153	AC-FT= 2.20
*S DIVIDE TOTAL FLOW AT NORTHWEST CORNER OF BASIN 404 INTO STORM DRAIN FLOW *										
*S AND OVERFLOW THAT SPILLS INTO EUBANK BOULEVARD AT BELL *										
DIVIDE HYD	AP298.SD	44	90	.07569	104.30	7.933	1.96511	1.766	2.153	
	AP298.OLF	AND	56	.00000	.00	.000	.00000	-.033	.000	
ROUTE	ACOMA.OUT	56	91	.00000	.00	.000	.00000	-.033	.000	
*S ROUTING STORM DRAIN FLOW (AP29B.SD) AT EUBANK/BELL										
*S NORTH ALONG EUBANK BLVD TO CONFLUENCE WITH HOME DEPOT SD (MH-1942)										
ROUTE	R.APG.SD	90	92	.07569	104.04	7.933	1.96511	1.766	2.148	
COMPUTE NM HYD	406.00	-	44	.01810	45.54	2.173	2.25016	1.567	3.930	PER IMP= 95.0
ADD HYD	406.10	42&44	45	.05266	130.71	6.133	2.18369	1.833	3.878	
*S DIVIDE BY CB ON NORTH SIDE CENTRAL STREET BETWEEN MH# S-4 AND MH# S-42										
*S**** OLF HYD 103.23 IS AP #18 *****										
DIVIDE HYD	CB16	46	42	.00037	1.17	.041	2.11458	1.700	5.023	
	103.23	AND	44	.00000	.00	.000	.00000	-.033	.000	
*S DIVIDE BY CB ON SOUTH SIDE CENTRAL STREET BETWEEN MH# S-4 AND MH# S-42										
*S**** OLF HYD 406.13 IS AP #17 *****										
DIVIDE HYD	CB17	45	48	.03265	49.00	3.802	2.18369	1.567	2.345	
	406.13	AND	49	.02002	81.71	2.331	2.18369	1.833	6.379	
*S TOTAL PIPE FLOW AT CENTRAL AND EUBANK FROM EXISTING 66"										
*S**** PIPE HYD CB17.1 IS AP #17 *****										
ADD HYD	CB17.1	42&48	40	.03301	50.17	3.843	2.18293	1.700	2.375	
*S DIVIDE PIPE HYD CB17.1 BY MAXIMUM PIPE CAPACITY OF 60" IN EUBANK										
DIVIDE HYD	CB17.13	40	43	.03301	50.17	3.843	2.18293	1.700	2.375	
	CB17.OLF	AND	48	.00000	.00	.000	.00000	-.033	.000	
COMPUTE NM HYD	501.00	-	51	.01967	41.55	2.275	2.16836	1.633	3.301	PER IMP= 90.0
*S ROUTING 213 THRU 501 ON SOUTHERN STREET										
ROUTE	213.02	24	52	.00828	12.54	1.021	2.31188	1.800	2.366	
ADD HYD	403.10	41&52	53	.06572	118.31	6.698	1.91102	1.633	2.813	
*S TOTAL OLF AT SOUTHERN AND ELIZABETH										
ADD HYD	501.10	51&53	52	.08539	159.86	8.973	1.97030	1.633	2.925	
*S ADD PIPE HYD 401.12CB WITH OLF HYD 501.1 FOR PROPOSED PIPE										
ADD HYD	501.20	72&52	71	.37819	592.24	41.846	2.07462	1.667	2.447	
*S ROUTING 501.2 THRU 502 ON ELIZABETH STREET WITH PROPOSED 90" PIPE										
*S Q(CAP) = 584 CFS, AT SLOPE=0.0067										
ROUTE	501.22	71	73	.37819	587.82	41.846	2.07462	1.667	2.429	
COMPUTE NM HYD	502.00	-	52	.19070	313.77	16.069	1.57996	1.633	2.571	PER IMP= 49.0
COMPUTE NM HYD	503.00	-	55	.18018	290.84	15.045	1.56562	1.633	2.522	PER IMP= 48.0
COMPUTE NM HYD	504.00	-	56	.00886	15.57	.482	1.02027	1.500	2.746	PER IMP= 10.0
COMPUTE NM HYD	505.00	-	59	.06230	72.84	3.390	1.02027	1.633	1.827	PER IMP= 10.0
*S TOTAL PROPOSED PIPE FLOW AT END OF SUB-BASIN 502										
ADD HYD	502.10	52&73	72	.56889	893.16	57.915	1.90881	1.667	2.453	
ADD HYD	504.10	56&55	53	.18904	301.08	15.527	1.54005	1.633	2.489	
ADD HYD	505.10	53&59	52	.25134	373.91	18.917	1.41121	1.633	2.324	
*S TOTAL FLOW TO PROPOSED DETENTION BASIN										
ADD HYD	505.20	52&72	73	.82023	1264.54	76.832	1.75633	1.633	2.409	
*S ROUTING PROPOSED RESERVOIR WITH 66" OUTLET										
ROUTE RESERVOIR	504.RES	73	71	.82023	291.91	76.832	1.75633	2.333	.556	AC-FT= 43.11

```
*S
*S        OUTFLOW(CFS)    STORAGE(AC-FT)    ELEV(FT)
*S            0                0             75.5
*S           50              0.081           76
*S           88              3.575           78
*S          170             12.981           80
*S          240             27.687           82
*S          282             36.367           83
*S          295             45.216           84
*S          310             54.233           85
*S
*S ROUTING 504.RES IN PROPOSED ELIZABETH STREET'S 78" THRU BASIN 509/510
*S Q(CAP) = 472 CFS ; SLOPE=0.0094
```

COMMAND	HYDROGRAPH IDENTIFICATION	FROM ID NO.	TO ID NO.	AREA (SQ MI)	PEAK DISCHARGE (CFS)	RUNOFF VOLUME (AC-FT)	RUNOFF (INCHES)	TIME TO PEAK (HOURS)	CFS PER ACRE	NOTATION
ROUTE	504.R2	71	72	.82023	291.83	76.832	1.75633	2.366	.556	
*S *** SUB-BASIN 405AA ****										
*S *** HOME DEPOT DRAINAGE BASIN "A" *										
COMPUTE NM HYD	405AA	-	94	.00799	23.65	.924	2.16836	1.500	4.623	PER IMP= 90.0
*S ** ROUTE 405AA THROUGH HOME DEPOT PARKING LOT POND										
*S ** USING A 4" ORIFICE PLATE										
ROUTE RESERVOIR	PONDA	94	97	.00799	.77	.895	2.09947	2.566	.150	AC-FT= .77
*S * SUB-BASIN 405AB ****										
*S HOME DEPOT DRAINAGE BASIN "B" *										
COMPUTE NM HYD	405AB	-	98	.01757	51.96	2.032	2.16836	1.500	4.621	PER IMP= 90.0
*S ADD SUB-BASIN 405AB TO OUTFLOW FROM PONDA ROUTING										
ADD HYD	BPONDA	98&97	99	.02556	52.51	2.927	2.14681	1.500	3.210	
*S ROUTE BPONDA THROUGH HOME DEPOT PARKING LOT POND B										
ROUTE RESERVOIR	AP.29D	99	97	.02556	3.02	2.910	2.13464	2.433	.185	AC-FT= 1.64
*S ADD HOME DEPOT FLOW TO STORM DRAIN FLOW AT R.AP.G.SD										
ADD HYD	AP.D	97&92	94	.10125	106.84	10.843	2.00791	1.766	1.649	
ROUTE	AP.29E	94	97	.10125	106.75	10.841	2.00766	1.800	1.647	
COMPUTE NM HYD	507.00	-	51	.02184	66.23	2.609	2.24012	1.500	4.738	PER IMP= 95.0
COMPUTE NM HYD	508.00	-	52	.02059	53.72	2.035	1.85327	1.500	4.077	PER IMP= 70.0
*S TOTAL FLOW AT EUBANK AND 500' SOUTH OF SOUTHERN										
*S**** OLF HYD 508.1 IS AP #30 *****										
ADD HYD	508.10	51&52	57	.04243	119.95	4.644	2.05238	1.500	4.417	
COMPUTE NM HYD	509.00	-	51	.02582	67.36	2.552	1.85327	1.500	4.076	PER IMP= 70.0
COMPUTE NM HYD	510.00	-	52	.07573	167.53	7.485	1.85328	1.567	3.457	PER IMP= 70.0
ADD HYD	510.10	52&51	54	.10155	230.14	10.037	1.85327	1.533	3.541	
*S TOTAL PROPOSED PIPE FLOW AT ELIZABETH AND EUBANK										
ADD HYD	510.20	72&54	71	.92178	345.85	86.869	1.76701	2.000	.586	
*S ROUTING 510.1 IN PROPOSED 96" FROM ELIZABTH TO SUB-BASIN 606 ON EUBANK										
*S Q(CAP) = 465 CFS AT SLOPE=0.003										
ROUTE	510.22	71	72	.92178	344.01	86.869	1.76701	2.033	.583	
*S ADD PIPE HYD AP.29E TO PIPE HYD CB17.13 ***										
*S TOTAL PROPOSED PIPE FLOW AT EUBANK AND CENTRAL										
*S**** PIPE HYD EUB.1 IS AP #19 *****										
ADD HYD	EUB.1	97&43	81	.13426	156.33	14.685	2.05076	1.800	1.819	
*S FROM MH# S-704 TO MH# S-4										
*S Q(CAP) = 187 CFS										
ROUTE	CB17.12	81	42	.13426	155.02	14.681	2.05018	1.833	1.804	
*S TOTAL PIPE FLOW AT EUBANK AND CHICO										
ADD HYD	CB17.2	32&42	43	.36512	337.89	36.286	1.86339	1.866	1.446	
*S DIVIDE PIPE HYD CB17.2 BY MAXIMUM PIPE CAPACITY OF 60" IN EUBANK										
*S OLF HYD CB17.OLF2 IS AMOUNT OF FLOW THAT COMES OUT FROM MH S-704										
*S**** PIPE HYD CB17.23 IS AP #25 *****										
DIVIDE HYD	CB17.23	43	42	.32733	235.00	32.531	1.86339	1.600	1.122	
	CB17.OLF2	AND	44	.03779	102.89	3.755	1.86339	1.866	4.254	
*S FROM MH# S-503 TO MH# S-704										
*S Q(CAP) = 235 CFS										
ROUTE	CB17.22	42	43	.32733	235.00	32.528	1.86325	1.966	1.122	
*S TOTAL OLF FLOW AT EUBANK AND CHICO										
ADD HYD	309.20	37&44	46	.07688	205.76	7.360	1.79513	1.800	4.182	
*S OLF HYD 309.13 THRU 310 ON EUBANK STREET; FROM CHICO TO COPPER										
ROUTE	309.22	46	42	.07688	199.81	7.360	1.79520	1.833	4.061	
ADD HYD	310.10	42&38	48	.13513	265.15	14.070	1.95241	1.800	3.066	
*S DIVIDE BY CB ON EUBANK STREET BETWEEN MH# S-704 AND MH# S-503, INCLUDING 48										
*S**** OLF HYD 310.13 IS AP #26 *****										
DIVIDE HYD	CB12	48	44	.11200	160.00	11.662	1.95241	1.567	2.232	
	310.13	AND	49	.02313	105.15	2.408	1.95241	1.800	7.103	
*S TOTAL PIPE FLOW AT EUBANK AND COPPER										
*S**** PIPE HYD CB17.3 IS AP #27 *****										
ADD HYD	CB17.3	44&43	48	.43933	395.00	44.191	1.88598	1.966	1.405	
COMPUTE NM HYD	601.00	-	61	.03286	75.65	3.322	1.89569	1.533	3.597	PER IMP= 71.0
*S SUB-BASIN 602 EITHER PONDS OR GOES INTO TIJERAS ARROYO										
COMPUTE NM HYD	602.00	-	62	.01436	26.02	.770	1.00588	1.500	2.832	PER IMP= .0
COMPUTE NM HYD	603.00	-	63	.01970	35.70	1.057	1.00588	1.500	2.831	PER IMP= .0
COMPUTE NM HYD	604.00	-	64	.06839	127.07	6.348	1.74050	1.600	2.903	PER IMP= 60.5
*S ROUTING 604 THRU 603 ON GRAVEL ROAD										
ROUTE	604.02	64	65	.06839	123.73	6.348	1.74050	1.633	2.827	
*S OLF HYD 604.1 EITHER PONDS OR GOES INTO TIJERAS ARROYO										
*S**** OLF HYD 604.1 IS AP #33 *****										
ADD HYD	604.10	63&65	64	.08809	147.32	7.405	1.57621	1.633	2.613	
COMPUTE NM HYD	605.00	-	65	.04536	80.92	5.286	2.18485	1.733	2.787	PER IMP= 90.0
COMPUTE NM HYD	606.00	-	66	.06633	154.15	7.729	2.18485	1.600	3.631	PER IMP= 90.0
*S OLF HYD 606.1 GOES INTO EXISTING RETENTION BASIN										

COMMAND	HYDROGRAPH IDENTIFICATION	FROM ID NO.	TO ID NO.	AREA (SQ MI)	PEAK DISCHARGE (CFS)	RUNOFF VOLUME (AC-FT)	RUNOFF (INCHES)	TIME TO PEAK (HOURS)	CFS PER ACRE	NOTATION
ADD HYD	606.10	65&66	67	.11169	217.95	13.015	2.18484	1.633	3.049	
ADD HYD	606.20	72&67	73	1.03347	542.01	99.884	1.81217	1.633	.819	
*S ROUTING 606.2 IN PROPOSED 96" THRU SUB-BASIN 607										
*S Q(CAP) = 600 CFS AT SLOPE=0.005										
ROUTE	606.22	73	71	1.03347	531.99	99.884	1.81217	1.700	.804	
COMPUTE NM HYD	607.00	-	65	.12156	223.97	12.545	1.93498	1.667	2.879	PER IMP= 68.0
ADD HYD	607.10	65&71	72	1.15503	752.95	112.429	1.82509	1.667	1.019	
*S ROUTING 607.1 IN PROPOSED 96" ; S=0.0082 FT/FT										
ROUTE	607.12	72	71	1.15503	745.74	112.429	1.82509	1.700	1.009	
COMPUTE NM HYD	608.00	-	65	.08609	74.20	4.330	.94295	1.700	1.347	PER IMP= 15.0
*S TOTAL FLOW TO PROPOSED OUTFALL CHANNEL										
ADD HYD	608.10	65&71	68	1.24112	819.94	116.758	1.76390	1.700	1.032	
*S**** SUB-BASIN 609 IS AP #35 *****										
COMPUTE NM HYD	609.00	-	65	.02603	25.38	1.062	.76501	1.600	1.523	PER IMP= .0
FINISH										

```
                                  FROM  TO                    PEAK        RUNOFF                TIME TO   CFS
                     HYDROGRAPH   ID    ID        AREA     DISCHARGE     VOLUME      RUNOFF       PEAK    PER
COMMAND            IDENTIFICATION NO.   NO.      (SQ MI)     (CFS)       (AC-FT)   (INCHES)    (HOURS)   ACRE      NOTATION

*S                50                0.081        76
*S                88                3.575        78
*S               170               12.981        80
*S               240               27.687        82
*S               282               36.367        83
*S               295               45.216        84
*S               310               54.233        85
*S
*S ROUTING 504.RES IN PROPOSED ELIZABETH STREET'S 78" THRU BASIN 509/510
*S Q(CAP) = 472 CFS ; SLOPE=0.0094
ROUTE                    504.R2   71   72        .82023       291.83      76.832     1.75633     2.366     .556
*S *** SUB-BASIN 405AA ****
*S *** HOME DEPOT DRAINAGE BASIN "A" *
COMPUTE NM HYD           405AA    -    94        .00799        23.65        .924     2.16836     1.500    4.623 PER IMP=  90.0
*S ** ROUTE 405AA THROUGH HOME DEPOT PARKING LOT POND
*S ** USING A 4" ORIFICE PLATE
ROUTE RESERVOIR          PONDA    94   97        .00799          .77        .895     2.09947     2.566     .150 AC-FT=     .77
*S * SUB-BASIN 405AB ****
*S HOME DEPOT DRAINAGE BASIN "B" *
COMPUTE NM HYD           405AB    -    98        .01757        51.96       2.032     2.16836     1.500    4.621 PER IMP=  90.0
*S  ADD SUB-BASIN 405AB TO OUTFLOW FROM PONDA ROUTING
ADD HYD                  BPONDA 98&97  99        .02556        52.51       2.927     2.14681     1.500    3.210
*S ROUTE BPONDA THROUGH HOME DEPOT PARKING LOT POND B
ROUTE RESERVOIR          AP.29D   99   97        .02556         3.02       2.910     2.13464     2.433     .185 AC-FT=    1.64
*S  ADD HOME DEPOT FLOW TO STORM DRAIN FLOW AT R.AP.G.SD
ADD HYD                    AP.D 97&92  94        .11360       105.91      12.105     1.99794     1.700    1.457
ROUTE                    AP.29E   94   97        .11360       105.97      12.104     1.99772     1.700    1.458
COMPUTE NM HYD           507.00   -    51        .02184        66.23       2.609     2.24012     1.500    4.738 PER IMP=  95.0
COMPUTE NM HYD           508.00   -    52        .02059        53.72       2.035     1.85327     1.500    4.077 PER IMP=  70.0
*S TOTAL FLOW AT EUBANK AND 500' SOUTH OF SOUTHERN
*S****     OLF HYD 508.1 IS AP #30     *****
ADD HYD                  508.10 51&52  57        .04243       119.95       4.644     2.05238     1.500    4.417
COMPUTE NM HYD           509.00   -    51        .02582        67.36       2.552     1.85327     1.500    4.076 PER IMP=  70.0
COMPUTE NM HYD           510.00   -    52        .07573       167.53       7.485     1.85328     1.567    3.457 PER IMP=  70.0
ADD HYD                  510.10 52&51  54        .10155       230.14      10.037     1.85327     1.533    3.541
*S TOTAL PROPOSED PIPE FLOW AT ELIZABETH AND EUBANK
ADD HYD                  510.20 72&54  71        .92178       345.85      86.869     1.76701     2.000     .586
*S ROUTING 510.1 IN PROPOSED 96" FROM ELIZABTH TO SUB-BASIN 606 ON EUBANK
*S Q(CAP) = 465 CFS AT SLOPE=0.003
ROUTE                    510.22   71   72        .92178       344.01      86.869     1.76701     2.033     .583
*S  ADD PIPE HYD AP.29E TO PIPE HYD CB17.13 ***
*S  TOTAL PROPOSED PIPE FLOW AT EUBANK AND CENTRAL
*S****     PIPE HYD EUB.1 IS AP #19     *****
ADD HYD                    EUB.1 97&43  81        .14661       156.14      15.947     2.03943     1.700    1.664
*S FROM MH# S-704  TO  MH# S-4
*S Q(CAP) = 187 CFS
ROUTE                   CB17.12   81   42        .14661       153.08      15.943     2.03889     1.733    1.631
*S TOTAL PIPE FLOW AT EUBANK AND CHICO
ADD HYD                  CB17.2 32&42  43        .37747       332.60      37.548     1.86512     1.800    1.377
*S DIVIDE PIPE HYD CB17.2 BY MAXIMUM PIPE CAPACITY OF 60" IN EUBANK
*S OLF HYD CB17.OLF2 IS AMOUNT OF FLOW THAT COMES OUT FROM MH S-704
*S****     PIPE HYD CB17.23 IS AP #25     *****
DIVIDE HYD              CB17.23   43   42        .33611       235.00      33.434     1.86512     1.567    1.092
                      CB17.OLF2  AND   44        .04136        97.60       4.114     1.86512     1.800    3.687
*S FROM MH# S-503  TO  MH# S-704
*S Q(CAP) = 235 CFS
ROUTE                   CB17.22   42   43        .33611       235.00      33.432     1.86499     1.833    1.092
*S TOTAL OLF FLOW AT EUBANK AND CHICO
ADD HYD                  309.20 37&44  46        .08045       204.98       7.719     1.79905     1.766    3.981
*S OLF HYD 309.13 THRU 310 ON EUBANK STREET; FROM CHICO TO COPPER
ROUTE                    309.22   46   42        .08045       198.34       7.719     1.79911     1.833    3.852
ADD HYD                  310.10 42&38  48        .13870       268.15      14.429     1.95063     1.800    3.021
*S DIVIDE BY CB ON EUBANK STREET BETWEEN MH# S-704  AND  MH# S-503, INCLUDING 48
*S****     OLF HYD 310.13 IS AP #26     *****
DIVIDE HYD                 CB12   48   44        .11413       160.00      11.873     1.95063     1.567    2.191
                         310.13  AND   49        .02457       108.15       2.556     1.95063     1.800    6.878
*S TOTAL PIPE FLOW AT EUBANK AND COPPER
*S****     PIPE HYD CB17.3 IS AP #27     *****
ADD HYD                  CB17.3 44&43  48        .45024       395.00      45.305     1.88669     1.833    1.371
COMPUTE NM HYD           601.00   -    61        .03286        75.65       3.322     1.89569     1.533    3.597 PER IMP=  71.0
*S SUB-BASIN 602 EITHER PONDS OR GOES INTO TIJERAS ARROYO
```

COMMAND	HYDROGRAPH IDENTIFICATION	FROM ID NO.	TO ID NO.	AREA (SQ MI)	PEAK DISCHARGE (CFS)	RUNOFF VOLUME (AC-FT)	RUNOFF (INCHES)	TIME TO PEAK (HOURS)	CFS PER ACRE	NOTATION
COMPUTE NM HYD	602.00	-	62	.01436	26.02	.770	1.00588	1.500	2.832	PER IMP= .0
COMPUTE NM HYD	603.00	-	63	.01970	35.70	1.057	1.00588	1.500	2.831	PER IMP= .0
COMPUTE NM HYD	604.00	-	64	.06839	127.07	6.348	1.74050	1.600	2.903	PER IMP= 60.5
*S ROUTING 604 THRU 603 ON GRAVEL ROAD										
ROUTE	604.02	64	65	.06839	123.73	6.348	1.74050	1.633	2.827	
*S OLF HYD 604.1 EITHER PONDS OR GOES INTO TIJERAS ARROYO										
*S**** OLF HYD 604.1 IS AP #33 *****										
ADD HYD	604.10	63&65	64	.08809	147.32	7.405	1.57621	1.633	2.613	
COMPUTE NM HYD	605.00	-	65	.04536	80.92	5.286	2.18485	1.733	2.787	PER IMP= 90.0
COMPUTE NM HYD	606.00	-	66	.06633	154.15	7.729	2.18485	1.600	3.631	PER IMP= 90.0
*S OLF HYD 606.1 GOES INTO EXISTING RETENTION BASIN										
ADD HYD	606.10	65&66	67	.11169	217.95	13.015	2.18484	1.633	3.049	
ADD HYD	606.20	72&67	73	1.03347	542.01	99.884	1.81217	1.633	.819	
*S ROUTING 606.2 IN PROPOSED 96" THRU SUB-BASIN 607										
*S Q(CAP) = 600 CFS AT SLOPE=0.005										
ROUTE	606.22	73	71	1.03347	531.99	99.884	1.81217	1.700	.804	
COMPUTE NM HYD	607.00	-	65	.12156	223.97	12.545	1.93498	1.667	2.879	PER IMP= 68.0
ADD HYD	607.10	65&71	72	1.15503	752.95	112.429	1.82509	1.667	1.019	
*S ROUTING 607.1 IN PROPOSED 96" ; S=0.0082 FT/FT										
ROUTE	607.12	72	71	1.15503	745.74	112.429	1.82509	1.700	1.009	
COMPUTE NM HYD	608.00	-	65	.08609	74.20	4.330	.94295	1.700	1.347	PER IMP= 15.0
*S TOTAL FLOW TO PROPOSED OUTFALL CHANNEL										
ADD HYD	608.10	65&71	68	1.24112	819.94	116.758	1.76390	1.700	1.032	
*S**** SUB-BASIN 609 IS AP #35 *****										
COMPUTE NM HYD	609.00	-	65	.02603	25.38	1.062	.76501	1.600	1.523	PER IMP= .0
FINISH										

Smith Engineering Company
A Full Service Engineering Company

February 2, 1998

Loren D. Meinz
Civil Engineer
City of Albuquerque Public Works Dept
Hydrology Division
P.O. Box 1293
Albuquerque, NM 87103

Re: Supplement to the Amendment #1 for the South Eubank Area Storm Drainage Analysis (November 1995)

Dear Mr. Meinz:

Smith Engineering Company has developed an alternative scenario for Amendment #1 to the South Eubank Area Storm Drainage Analysis. This alternative follows the same hydrologic assumptions that we outlined in Amendment #1, except that *sub-basin 506 (flow from Southern Avenue) has been routed west to a future Southern Storm Drain System and not into the project area.* The following paragraphs describe the results of this analysis.

The AHYMO model, Eubsdc.dat, was used to model the 100-year 6-hour event for this alternative scenario to Amendment #1. A schematic for the AHYMO model is shown in Plate 5C. A 10-year 6-hour analysis was also performed using the AHYMO model, Eubsdc10.dat. The summary output for the 100-year event is attached.

The results of this updated analysis show that there is still a combined peak flow at the northwest corner of 404 of 153 cfs. A proposed detention basin was modeled at this location to reduce this peak flow so as not to exceed the capacity of the proposed Eubank Storm Drain (Cochiti to Bell) which is 110 cfs. Without the additional flow from sub-basin 506, the restricted flow at 404 must be less than or equal to 104 cfs. A summary of the peak flows at the analysis points is shown in Table 1.

TABLE 1. SUMMARY OF PEAK FLOWS AND RUNOFF VOLUMES AT ANALYSIS POINTS

Analysis Point	Description	100-yr 6-hr Peak Q Overland (cfs)	100-yr 6-hr Peak Q in Storm Drain (cfs)
29	Flow west on Acoma	0	N/A
29A	Flow just south of Eubank/Bell	0	N/A
29B	Flow at NW corner of 404 upstream of proposed detention basin	153	N/A
29C	Flow just north of Eubank/Bell	0	104
29D	Flow from Home Depot SD	N/A	3
29E	Flow just south of Eubank/Central (Capacity is 110 cfs +/-)	0	107*

* Total flow in Eubank Storm Drain is sum of the restricted flow from NW corner of sub-basin 404 (104 cfs), and restricted flow from Home Depot (3 cfs).

6400 Uptown Boulevard, N.E Suite 500E Albuquerque, N. M 87110 Telephone 505/884-0700 Fax 505/884-2376

The following recommendations are made for this alternative to Amendment #1:

- Allow the 100-year peak flow of 32 cfs from sub-basin 506 (Southern Ave. Flow) to flow west on Southern Avenue.
- Reduce the 100-year peak flow generated by sub-basin 404 (including the historic flow contributed by sub-basin 405B) from 153 cfs to 104 cfs. This would require a detention basin with an approximate volume of 2.2 acre-feet.
- Restrict the 100-year peak flow from Home Depot (sub-basins 405AA and 405AB) to 3 cfs as presented in the "Drainage Report for Albuquerque II Home Depot".
- Reduce the 100-year discharge that flows west on Acoma to 0 cfs.

Should you have any questions or comments about this analysis please call Steve Kemna at (505) 884-0700.

Sincerely,

Smith Engineering Company

Stephen Paul Kemna

Stephen P. Kemna, P.E.

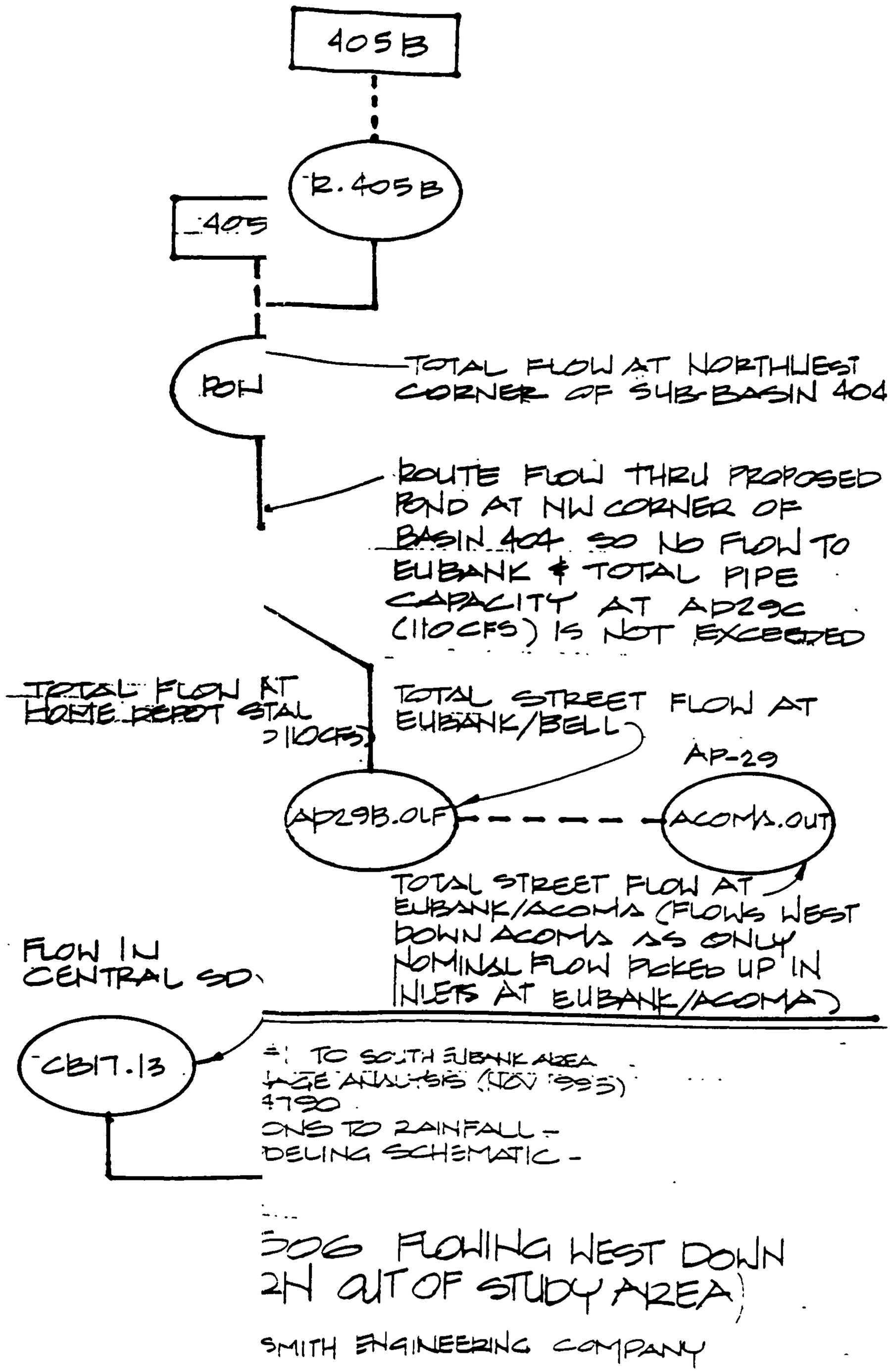
405B
R.405B
405
POH
TOTAL FLOW AT NORTHWEST CORNER OF SUB-BASIN 404
ROUTE FLOW THRU PROPOSED POND AT NW CORNER OF BASIN 404 SO NO FLOW TO EUBANK & TOTAL PIPE CAPACITY AT AP29C (110CFS) IS NOT EXCEEDED
TOTAL FLOW AT HOME DEPOT STAL >110CFS
TOTAL STREET FLOW AT EUBANK/BELL
AP-29
AP29B.OLF
ACOMA.OUT
TOTAL STREET FLOW AT EUBANK/ACOMA (FLOWS WEST DOWN ACOMA AS ONLY NOMINAL FLOW PICKED UP IN INLETS AT EUBANK/ACOMA)
FLOW IN CENTRAL SD
CB17.13
TO SOUTH EUBANK AREA
AGE ANALYSIS (NOV '99 S)
4790
ONS TO RAINFALL -
DELING SCHEMATIC -
506 FLOWING WEST DOWN
2H OUT OF STUDY AREA)
SMITH ENGINEERING COMPANY

```
AHYMO SUMMARY TABLE (AHYMO194) - AMAFCA Hydrologic Model - January, 1994          RUN DATE (MON/DAY/YR) =01/28/1998
INPUT FILE = EUBSDC.DAT                                                                   USER NO.= T_DALTON.S94

                                 FROM  TO                    PEAK        RUNOFF                TIME TO    CFS      PAGE =   1
                     HYDROGRAPH   ID   ID        AREA     DISCHARGE     VOLUME      RUNOFF      PEAK     PER
COMMAND        IDENTIFICATION    NO.  NO.      (SQ MI)      (CFS)       (AC-FT)    (INCHES)   (HOURS)   ACRE      NOTATION

*S       INCLUDES PROPOSED 96" PIPE AND DETENTION BASIN WITH 66" OUTLET PIPE
*S       THAT PICK UP FLOWS FROM BASIN 501, 502, 503, 504, 401, 403
*S       DOES PICK UP PIPE FLOW FROM CENTRAL AND ELIZABETH
*S       INCREASE PIPE SIZE IN JANE STREET AND DIVERTS THIS FLOW NORTH WARD
*S       TO I-40 DIVERSION CHANNEL
*S       TAKE FLOW FROM 54" STUB-OUT AT CENTRAL AND EUBANK TO EUBANK LINE
*S
START                                                                                          TIME=        .0
RAINFALL  TYPE= 1                                                                              RAIN6=     2.56
*S  100-YEAR STORM
*S  ONE-HOUR=2.07
*S  SIX-HOUR=2.56
*S HYD 101 IS OLF THAT IS AT THE BEGINNING OF THE CENTRAL SD SYSTEM
COMPUTE NM HYD        101.00   -    11        .03319       103.12       4.092      2.31187    1.500    4.855 PER IMP= 100.0
*S ROUTING 101 THRU 102 ON CENTRAL AVENUE'S NORTH SIDE
ROUTE                 101.02   11   12        .03319        91.32       4.092      2.31188    1.533    4.299
COMPUTE NM HYD        102.00   -    11        .05253       149.46       5.978      2.13387    1.500    4.446 PER IMP=  88.0
ADD HYD               102.10 11&12  13        .08572       237.16      10.071      2.20279    1.533    4.323
*S DIVIDE BETWEEN MH# S-132 TO MH# S-262
*S****     PIPE HYD CB1 AND OLF HYD 102.13 IS AP #9     *****
DIVIDE HYD               CB1   13   11        .05140        61.00       6.039      2.20279    1.367    1.854
                      102.13  AND   12        .03432       176.16       4.032      2.20279    1.533    8.020
*S OLF HYD 102.13 THRU 103 ON CENTRAL STREET'S NORTH SIDE
ROUTE                 102.12   12   14        .03432       137.98       4.032      2.20293    1.600    6.282
COMPUTE NM HYD        103.00   -    13        .02347        49.09       2.453      1.95937    1.600    3.268 PER IMP=  77.0
ADD HYD               103.13 13&14  12        .05779       187.07       6.485      2.10399    1.600    5.058
*S DIVIDE CATCH BASINS AND CATTLE GUARD BETWEEN MH# S-102  TO  MH# S-132
*S OLF HYD 103.03 IS AT JUAN TABO AND CENTRAL ON THE NORTH SIDE
*S****     OLF HYD 103.03 IS AP #13     *****
DIVIDE HYD               CB2   12   14        .04575        99.00       5.133      2.10399    1.500    3.381
                      103.03  AND   15        .01204        88.07       1.351      2.10399    1.600   11.427
*S INCLUDES SUB-BASIN 104 AND 105
COMPUTE NM HYD        105.00   -    16        .06765       170.33       7.502      2.07926    1.533    3.934 PER IMP=  84.0
COMPUTE NM HYD        106.00   -    17        .03425        68.27       3.016      1.65135    1.567    3.115 PER IMP=  48.0
*S ROUTING 106 THRU 105/108 ON SKYLINE ROAD
ROUTE                 106.02   17   18        .03425        61.47       3.016      1.65136    1.633    2.804
COMPUTE NM HYD        108.00   -    13        .04283       111.62       4.599      2.01333    1.533    4.072 PER IMP=  80.0
ADD HYD               106.10 16&18  17        .10190       222.24      10.518      1.93543    1.567    3.408
*S TOTAL FLOW GOING TO JUAN TABO'S CATTLE GUARD
ADD HYD               108.10 13&17  16        .14473       327.77      15.117      1.95848    1.533    3.539
*S CATTLE GUARD AND CATCH BASINS BETWEEN MH# S-993  TO  MH# S-903
*S****     OLF HYD 108.13 IS AP #12     *****
DIVIDE HYD               CB3   16   17        .14318       300.00      14.955      1.95848    1.500    3.274
                      108.13  AND   18        .00155        27.77        .162      1.95847    1.533   27.915
COMPUTE NM HYD        201.00   -    21        .02777        84.21       3.318      2.24012    1.500    4.738 PER IMP=  95.0
*S EXISTING DETENTION BASIN IN BASIN 201
*S ROUTING RESERVOIR WITH SMALL ORIFICE PIPES AND 20' WEIR
ROUTE RESERVOIR      201.RES   21   22        .02777        23.79       3.316      2.23882    1.933    1.339 AC-FT=     2.05
*S
*S       OUTFLOW(CFS)    STORAGE(AC-FT)    ELEV(FT)
*S           0                0             5620
*S           2.5              0.468         5621
*S           3.8              0.937         5622
*S           4.8              1.405         5623
*S           5.6              1.873         5624
*S          29.0              2.107         5624.5
*S          70.0              2.342         5625
*S
*S ROUTING 201.RES THRU 202
ROUTE                 201.02   22   21        .02777        20.59       3.315      2.23821    2.066    1.159
COMPUTE NM HYD        202.00   -    22        .04041       103.90       4.816      2.23453    1.567    4.017 PER IMP=  95.0
COMPUTE NM HYD        209.00   -    25        .05761       119.24       5.400      1.75764    1.567    3.234 PER IMP=  62.0
ADD HYD               202.10 21&22  24        .06818       105.99       8.131      2.23602    1.567    2.429
ADD HYD               209.10 24&25  23        .12579       225.22      13.531      2.01693    1.567    2.798
*S DIVIDE OLF HYD 209.1 BY PROPOSED TOMLINSON PIPE NETWORK
*S****     OLF HYD 209.13 IS AP #1     *****
```

Pipe Report

Pipe	Upstream Node	Downstream Node	Discharge (cfs)	Length (ft)	Constructed Slope (ft/ft)	Section Size	Roughness	Capacity (cfs)	Upstream Invert Elevation (ft)	Downstream Invert Elevation (ft)	Upstream Ground Elevation (ft)	Downstream Ground Elevation (ft)	Upstream Cover (ft)	Downstream Cover (ft)	Upstream HGL (ft)	Downstream HGL (ft)	Upstream Depth (ft)	Downstream Depth (ft)	Average Velocity (ft/s)
54"	7+73	7+38	110 00	74 00	0 005000	54 inch	0 013	139 04	5,456 07	5,455 70	5,464 70	5,464 20	4 13	4 00	5,464 30	5,464 07	8 23	8 37	6 92
54"	7+38	S-103 AT HOME DEPO	110 00	445 00	0 004989	54 inch	0 013	138 89	5,455 80	5,453 38	5,464 20	5,463 55	4 10	5 67	5,464 03	5,462 64	8 43	9 26	6 92
54"	S-103 AT HOME DEPOT	S-102	110 00	238 00	0 005084	54 inch	0 013	140 21	5,453 38	5,452 17	5,463 55	5,468 00	5 67	11 33	5,462 53	5,461 78	9 15	9 61	6 92
54"	S-102	S-4 AT CENTRAL	110 00	290 00	0 006483	54 inch	0 013	158 32	5,452 07	5,450 19	5,468 00	5,465 00	11 43	10 31	5,461 75	5,460 84	9 68	10 65	6 92
60"	S-4 AT CENTRAL	S-902	160 00	470 00	0 005000	60 inch	0 013	184 15	5,449.72	5,447 37	5,465 00	5,463 70	10 28	11 33	5,460 68	5,458 91	10 96	11 54	8 15
60"	S-902	S-801	160 00	490 00	0 005306	60 inch	0 013	189 70	5,447 22	5,444 62	5,463 70	5,459 50	11 48	9 88	5,458 86	5,457 01	11 64	12 39	8 15
60"	S-801	S-802	160 00	372 00	0 005376	60 inch	0 013	190 96	5,444 62	5,442 62	5,459 50	5,457 00	9 88	9 38	5,456 96	5,455 55	12 34	12 93	8 15
60"	S-802	S-704 AT CHICO	160 00	265 00	0 004943	60 inch	0 013	183 11	5,442 47	5,441.18	5,457 00	5,454 50	9 53	8 34	5,455 50	5,454 50	13 03	13 34	8 15

APPENDIX B


```
AHYMO SUMMARY TABLE (AHYMO194) - AMAFCA Hydrologic Model - January, 1994          RUN DATE (MON/DAY/YR) =01/28/1998
INPUT FILE = EUBSDB.DAT                                                                   USER NO.= T_DALTON.S94

                                FROM  TO                    PEAK        RUNOFF                TIME TO   CFS      PAGE =   1
                   HYDROGRAPH   ID    ID        AREA     DISCHARGE     VOLUME      RUNOFF       PEAK    PER
COMMAND          IDENTIFICATION NO.   NO.      (SQ MI)     (CFS)       (AC-FT)    (INCHES)    (HOURS)  ACRE      NOTATION

*S       INCLUDES PROPOSED 96" PIPE AND DETENTION BASIN WITH 66" OUTLET PIPE
*S       THAT PICK UP FLOWS FROM BASIN 501, 502, 503, 504, 401, 403
*S       DOES PICK UP PIPE FLOW FROM CENTRAL AND ELIZABETH
*S       INCREASE PIPE SIZE IN JANE STREET AND DIVERTS THIS FLOW NORTH WARD
*S       TO I-40 DIVERSION CHANNEL
*S       TAKE FLOW FROM 54" STUB-OUT AT CENTRAL AND EUBANK TO EUBANK LINE
*S
START                                                                                                  TIME=        .0
RAINFALL  TYPE= 1                                                                                      RAIN6=     2.56
*S  100-YEAR STORM
*S  ONE-HOUR=2.07
*S  SIX-HOUR=2.56
*S HYD 101 IS OLF THAT IS AT THE BEGINNING OF THE CENTRAL SD SYSTEM
COMPUTE NM HYD        101.00   -    11        .03319      103.12      4.092     2.31187    1.500    4.855 PER IMP= 100.0
*S ROUTING 101 THRU 102 ON CENTRAL AVENUE'S NORTH SIDE
ROUTE                 101.02   11   12        .03319       91.32      4.092     2.31188    1.533    4.299
COMPUTE NM HYD        102.00   -    11        .05253      149.46      5.978     2.13387    1.500    4.446 PER IMP=  88.0
ADD HYD               102.10 11&12  13        .08572      237.16     10.071     2.20279    1.533    4.323
*S DIVIDE BETWEEN MH# S-132 TO MH# S-262
*S****     PIPE HYD CB1 AND OLF HYD 102.13 IS AP #9     *****
DIVIDE HYD               CB1   13   11        .05140       61.00      6.039     2.20279    1.367    1.854
                      102.13  AND   12        .03432      176.16      4.032     2.20279    1.533    8.020
*S OLF HYD 102.13 THRU 103 ON CENTRAL STREET'S NORTH SIDE
ROUTE                 102.12   12   14        .03432      137.98      4.032     2.20293    1.600    6.282
COMPUTE NM HYD        103.00   -    13        .02347       49.09      2.453     1.95937    1.600    3.268 PER IMP=  77.0
ADD HYD               103.13 13&14  12        .05779      187.07      6.485     2.10399    1.600    5.058
*S DIVIDE CATCH BASINS AND CATTLE GUARD BETWEEN MH# S-102  TO  MH# S-132
*S OLF HYD 103.03 IS AT JUAN TABO AND CENTRAL ON THE NORTH SIDE
*S****     OLF HYD 103.03 IS AP #13     *****
DIVIDE HYD               CB2   12   14        .04575       99.00      5.133     2.10399    1.500    3.381
                      103.03  AND   15        .01204       88.07      1.351     2.10399    1.600   11.427
*S INCLUDES SUB-BASIN 104 AND 105
COMPUTE NM HYD        105.00   -    16        .06765      170.33      7.502     2.07926    1.533    3.934 PER IMP=  84.0
COMPUTE NM HYD        106.00   -    17        .03425       68.27      3.016     1.65135    1.567    3.115 PER IMP=  48.0
*S ROUTING 106 THRU 105/108 ON SKYLINE ROAD
ROUTE                 106.02   17   18        .03425       61.47      3.016     1.65136    1.633    2.804
COMPUTE NM HYD        108.00   -    13        .04283      111.62      4.599     2.01333    1.533    4.072 PER IMP=  80.0
ADD HYD               106.10 16&18  17        .10190      222.24     10.518     1.93543    1.567    3.408
*S TOTAL FLOW GOING TO JUAN TABO'S CATTLE GUARD
ADD HYD               108.10 13&17  16        .14473      327.77     15.117     1.95848    1.533    3.539
*S CATTLE GUARD AND CATCH BASINS BETWEEN MH# S-993  TO  MH# S-903
*S****     OLF HYD 108.13 IS AP #12     *****
DIVIDE HYD               CB3   16   17        .14318      300.00     14.955     1.95848    1.500    3.274
                      108.13  AND   18        .00155       27.77       .162     1.95847    1.533   27.915
COMPUTE NM HYD        201.00   -    21        .02777       84.21      3.318     2.24012    1.500    4.738 PER IMP=  95.0
*S EXISTING DETENTION BASIN IN BASIN 201
*S ROUTING RESERVOIR WITH SMALL ORIFICE PIPES AND 20' WEIR
ROUTE RESERVOIR      201.RES   21   22        .02777       23.79      3.316     2.23882    1.933    1.339 AC-FT=     2.05
*S
*S       OUTFLOW(CFS)    STORAGE(AC-FT)    ELEV(FT)
*S           0                0              5620
*S           2.5              0.468          5621
*S           3.8              0.937          5622
*S           4.8              1.405          5623
*S           5.6              1.873          5624
*S          29.0              2.107          5624.5
*S          70.0              2.342          5625
*S
*S ROUTING 201.RES THRU 202
ROUTE                 201.02   22   21        .02777       20.59      3.315     2.23821    2.066    1.159
COMPUTE NM HYD        202.00   -    22        .04041      103.90      4.816     2.23453    1.567    4.017 PER IMP=  95.0
COMPUTE NM HYD        209.00   -    25        .05761      119.24      5.400     1.75764    1.567    3.234 PER IMP=  62.0
ADD HYD               202.10 21&22  24        .06818      105.99      8.131     2.23602    1.567    2.429
ADD HYD               209.10 24&25  23        .12579      225.22     13.531     2.01693    1.567    2.798
*S DIVIDE OLF HYD 209.1 BY PROPOSED TOMLINSON PIPE NETWORK
*S****     OLF HYD 209.13 IS AP #1     *****
```

```
DIVIDE HYD          DIVTOM.1   23   71        .11138       125.00      11.981      2.01693    1.467    1.754
                      209.13  AND   24        .01441       100.22       1.550      2.01693    1.567   10.869
*S ROUTE DIVTOM.1 THRU 210 IN 48" AND 54" PIPE
*S Q(CAP) = 208 CFS, AT SLOPE=0.013
```

COMMAND	HYDROGRAPH IDENTIFICATION	FROM ID NO.	TO ID NO.	AREA (SQ MI)	PEAK DISCHARGE (CFS)	RUNOFF VOLUME (AC-FT)	RUNOFF (INCHES)	TIME TO PEAK (HOURS)	CFS PER ACRE	NOTATION
ROUTE	DIVTOM.12	71	72	.11138	125.00	11.981	2.01689	1.766	1.754	
*S ROUTING 209.13 THRU 210 ON TOMLINSON DRIVE TO OUTFALL										
ROUTE	207C.12	24	22	.01441	65.76	1.550	2.01728	1.633	7.131	
COMPUTE NM HYD	203.00	-	21	.08386	172.02	8.709	1.94717	1.600	3.205	PER IMP= 75.0
*S DIVIDE SOUTH SIDE CENTRAL AVENUE BETWEEN MH# S-132 AND MH# S-262(CHECK TO S										
*S**** OLF HYD 203.03 IS AP #10 *****										
DIVIDE HYD	CB5	21	24	.00444	1.00	.461	1.94716	.967	.352	
	203.03	AND	25	.07942	171.02	8.247	1.94716	1.600	3.365	
*S**** PIPE HYD CB5.1 IS AP #10 *****										
ADD HYD	CB5.1	24&11	21	.05584	62.00	6.500	2.18245	1.367	1.735	
*S FROM MH# S-102 TO MH# S-132										
*S Q(CAP) = 73 CFS										
ROUTE	CB5.12	21	27	.05584	62.00	6.500	2.18245	1.966	1.735	
*S ROUTING 203.03 THRU 204 ON CENTRAL AVENUE'S SOUTH SIDE										
ROUTE	203.02	25	23	.07942	152.20	8.248	1.94723	1.667	2.995	
COMPUTE NM HYD	204.00	-	21	.06581	141.97	7.399	2.10798	1.600	3.371	PER IMP= 86.0
ADD HYD	204.10	23&21	24	.14523	287.70	15.646	2.02007	1.633	3.095	
*S DIVIDE SOUTH SIDE CENTRAL AVENUE BETWEEN MH# S-102 AND MH# S-123										
*S OLF HYD 204.13 IS AT JUAN TABO AND CENTRAL ON THE SOUTH SIDE										
*S**** OLF HYD 204.13 IS AP #14 *****										
DIVIDE HYD	CB6	24	25	.10358	117.00	11.160	2.02007	1.467	1.765	
	204.13	AND	86	.04164	170.70	4.486	2.02007	1.633	6.405	
ADD HYD	CB6.1	27&25	21	.15943	179.00	17.660	2.07694	1.966	1.754	
*S TOTAL PIPE FLOW AT JUAN TABO AND CENTRAL										
*S Q(CAP) AT MH# S-102 IS 260 CFS										
*S**** PIPE HYD CB6.2 IS AP #13 AND AP #14 *****										
ADD HYD	CB6.2	14&21	99	.20518	278.00	22.793	2.08297	1.766	2.117	
COMPUTE NM HYD	205.00	-	21	.01633	43.64	1.651	1.89569	1.500	4.175	PER IMP= 71.0
*S ROUTING 205 THRU 206 ON JUAN TABO STREET										
ROUTE	205.02	21	23	.01633	36.77	1.651	1.89570	1.567	3.519	
COMPUTE NM HYD	206.00	-	24	.01425	38.20	1.550	2.03920	1.500	4.189	PER IMP= 81.0
ADD HYD	206.10	23&24	21	.03058	73.94	3.201	1.96254	1.533	3.778	
*S DIVIDE OLF HYD 206.1 AT MH# S-592										
*S PIPE HYD 206.13 GOES TO PROPOSED SURGE POND										
DIVIDE HYD	CB18	21	27	.02644	42.00	2.768	1.96254	1.433	2.482	
	206.13	AND	28	.00414	31.94	.433	1.96254	1.533	12.068	
*S FROM MH# S-791 TO MH# S-592										
*S Q(CAP) = 48 CFS										
ROUTE	CB18.02	27	29	.02644	41.97	2.768	1.96256	1.700	2.480	
*S**** SUB-BASIN 208 IS AP #5 *****										
COMPUTE NM HYD	208.00	-	24	.09685	190.67	9.850	1.90704	1.600	3.076	PER IMP= 72.0
*S DIVIDE SUB-BASIN 208 AT MH# S-692										
DIVIDE HYD	CB19	24	27	.09400	161.00	9.561	1.90703	1.533	2.676	
	208.03	AND	21	.00285	29.67	.290	1.90703	1.600	16.269	
*S ROUTING 208.03 THRU 208 ON JUAN TABO STREET										
ROUTE	208.02	21	24	.00285	22.63	.290	1.90884	1.667	12.411	
*S TOTAL PIPE FLOW AT MH# S-691										
ADD HYD	CB19.1	27&29	23	.12045	202.97	12.329	1.91922	1.700	2.633	
*S DIVIDE PIPE HYD CB19.1 BY 36" INLET PIPE AT MH# S-691										
DIVIDE HYD	CB19.13	23	91	.06513	55.00	6.666	1.91922	1.400	1.320	
	DET.5	AND	92	.05532	147.97	5.662	1.91922	1.700	4.179	
*S TOTAL INFLOW TO DETENTION POND IN SUB-BASIN 502										
ADD HYD	DET.502	28&92	21	.05945	178.96	6.095	1.92223	1.533	4.703	
*S FROM MH# S-691 TO MH# S-792										
*S Q(CAP) = 47 CFS										
ROUTE	CB19.12	91	23	.06513	55.00	6.666	1.91922	1.467	1.320	
*S TOTAL PIPE FLOW AT MH# S-792										
ADD HYD	CB19.2	23&24	28	.06798	77.63	6.956	1.91878	1.667	1.784	
*S FROM MH# S-94(OUTFALL) TO MH# S-792										
*S Q(CAP) = 94 CFS										
ROUTE	CB19.12	28	29	.06798	71.89	6.956	1.91878	1.700	1.652	
COMPUTE NM HYD	207.00	-	23	.03038	70.01	2.857	1.76351	1.533	3.601	PER IMP= 63.0
*S ROUTE 207 THRU 210 IN PROPOSED 48" PIPE										
*S Q(CAP) = 76 CFS, AT SLOPE=0.0033										
ROUTE	207.02	23	71	.03038	66.41	2.857	1.76351	1.567	3.415	
COMPUTE NM HYD	210.00	-	24	.02613	51.48	2.153	1.54525	1.533	3.078	PER IMP= 47.0
ADD HYD	210.10	24&22	23	.04054	108.40	3.703	1.71298	1.633	4.178	
*S DIVIDE OLF HYD 210.1 BY PROPOSED TOMLINSON PIPE NETWORK										
*S**** OLF HYD 210.13 IS AP #3 *****										
DIVIDE HYD	DIVTOM.2	23	74	.03129	50.00	2.858	1.71298	1.500	2.497	
	210.13	AND	22	.00925	58.40	.845	1.71298	1.633	9.865	
*S ROUTING 210.13 THRU 211 ON TOMLINSON DRIVE TO OUTFALL										

COMMAND	HYDROGRAPH IDENTIFICATION	FROM ID NO.	TO ID NO.	AREA (SQ MI)	PEAK DISCHARGE (CFS)	RUNOFF VOLUME (AC-FT)	RUNOFF (INCHES)	TIME TO PEAK (HOURS)	CFS PER ACRE	NOTATION
ROUTE	210.12	22	27	.00925	48.56	.845	1.71354	1.667	8.203	
ADD HYD	DIVTOM.3	74&72	73	.14267	175.00	14.840	1.95024	1.766	1.917	
ADD HYD	207.10	73&71	72	.17305	241.10	17.697	1.91746	1.567	2.177	
*S ROUTE 207.1 THRU 211 IN 60" PIPE										
*S Q(CAP) = 263 CFS, AT SLOPE=0.0118										
ROUTE	211.12	72	73	.17305	240.14	17.697	1.91745	1.567	2.168	
COMPUTE NM HYD	211.00	-	23	.06408	110.04	5.340	1.56261	1.600	2.683	PER IMP= 48.0
*S TOTAL OLF AT TOMLINSON OUTFALL										
*S**** OLF HYD 211.1 IS AP #4 ****										
ADD HYD	211.10	23&27	22	.07333	151.89	6.186	1.58163	1.633	3.236	
*S TOTAL FLOW AT TOMLINSON OUTFALL										
ADD HYD	211.20	22&73	25	.24638	386.68	23.882	1.81750	1.633	2.452	
COMPUTE NM HYD	212.00	-	22	.05122	111.55	5.313	1.94479	1.567	3.403	PER IMP= 74.0
*S DIVIDE SUB-BASIN 212 BETWEEN MH# S-94(OUTFALL) AND MH# S-791										
*S**** OLF HYD 212.03 IS AP #8 *****										
DIVIDE HYD	CB20	22	24	.04540	69.80	4.709	1.94478	1.467	2.402	
	212.03	AND	27	.00582	41.75	.604	1.94478	1.567	11.210	
*S TOTAL FLOW IN THE "EXISTING" JUAN TABO STORM DRAIN SYSTEM										
*S**** PIPE HYD CB20.1 IS AP #8 *****										
ADD HYD	CB20.1	24&29	22	.11338	141.69	11.665	1.92919	1.700	1.953	
*S JUAN TABO ROAD, SOUTH OF CENTRAL										
COMPUTE NM HYD	213.00	-	24	.00828	18.50	1.021	2.31187	1.633	3.490	PER IMP= 100.0
COMPUTE NM HYD	301.00	-	31	.05794	99.24	5.468	1.76955	1.633	2.676	PER IMP= 62.0
*S FROM MH# S-973 TO MH# S-993 IN BEUENA VENTURA STREET										
*S Q(CAP) = 306 CFS ; 60" @ S=0.016										
ROUTE	CB3.02	17	32	.14318	300.07	14.955	1.95848	1.533	3.275	
*S OLF HYD 108.13 THRU 301 ON BEUENA VENTURA STREET										
ROUTE	108.12	18	13	.00155	10.60	.163	1.96180	1.600	10.650	
ADD HYD	301.10	13&31	33	.05949	105.85	5.631	1.77455	1.600	2.780	
*S HYD 301.13 IS TOTAL OLF AT JANE AND BEUENA VENTURA										
*S**** OLF HYD 301.13 IS AP #20 *****										
DIVIDE HYD	CB8	33	34	.05334	70.00	5.048	1.77455	1.533	2.051	
	301.13	AND	35	.00616	35.85	.583	1.77455	1.600	9.099	
ADD HYD	CB8.1	34&32	36	.19651	370.07	20.003	1.90856	1.533	2.942	
*S FROM MH# S-772 TO MH# S-973 IN JANE STREET										
*S Q(CAP) = 356 CFS ; 66" @ S=0.013										
ROUTE	CB8.12	36	31	.19651	369.48	20.003	1.90856	1.567	2.938	
*S OLF HYD 301.13 THRU 302 ON JANE STREET										
ROUTE	301.12	35	32	.00616	27.09	.583	1.77539	1.700	6.876	
COMPUTE NM HYD	302.00	-	33	.02999	51.08	2.830	1.76916	1.633	2.661	PER IMP= 63.0
*S DIVIDE BETWEEN MH# S-772 AND MH# S-973										
DIVIDE HYD	CB9	32	35	.00616	27.09	.583	1.77525	1.700	6.876	
	301.16	AND	36	.00000	.00	.000	.00000	-.033	.000	
*S DIVIDE SUB-BASIN OLF 302 BY MAXIMUM CB INFLOW AT JANE AND CHICO										
*S DIVIDE AT MH# S-772										
DIVIDE HYD	CHICO.CB	33	81	.02118	20.00	1.999	1.76915	1.467	1.475	
	302.03	AND	82	.00881	31.08	.831	1.76915	1.633	5.513	
ADD HYD	CB9.1	31&35	34	.20267	383.78	20.586	1.90451	1.633	2.959	
*S TOTAL PIPE FLOW AT CHICO AND JANE										
ADD HYD	CB9.1	34&81	83	.22385	403.78	22.585	1.89170	1.633	2.818	
*S ROUTING HYD CB9.1 FOR PROPOSED 84" IN JANE STREET NORTH OF CHICO ROAD										
*S Q(CAP) = 398 CFS ; 84" @ S=0.0045 FT/FT ; N=0.014										
ROUTE	CB9.12	83	31	.22385	401.93	22.585	1.89170	1.633	2.805	
*S ROUTING HYD CB9.12 FOR PROPOSED 66" PARALLEL TO FREEWAY										
*S Q(CAP) = 418 CFS ; 66" @ S=0.018										
ROUTE	CHICO.DIV	31	71	.22385	398.79	22.585	1.89170	1.633	2.784	
*S**** OLF HYD 302.1 IS AP #21 *****										
ADD HYD	302.10	82&36	34	.00881	31.08	.831	1.76915	1.633	5.513	
ROUTE	302.12	34	32	.00881	26.48	.831	1.76973	1.733	4.698	
COMPUTE NM HYD	303.00	-	33	.08070	128.69	7.616	1.76955	1.700	2.492	PER IMP= 62.0
ADD HYD	303.10	33&32	34	.08951	154.81	8.447	1.76955	1.700	2.702	
*S DIVIDE BETWEEN MH# S-743 AND MH# S-772 BY CB CAPACITY										
*S**** PIPE HYD CB10 IS AP #22 *****										
DIVIDE HYD	CB10	34	35	.07372	85.00	6.957	1.76955	1.533	1.802	
	303.13	AND	33	.01579	69.81	1.490	1.76955	1.700	6.907	
*S FROM MH# S-704 TO MH# S-743 IN CHICO ROAD										
*S Q(CAP) = 216 CFS										
ROUTE	CB10.12	35	36	.07372	85.00	6.957	1.76956	1.966	1.802	
COMPUTE NM HYD	304.00	-	31	.01342	39.16	1.655	2.31187	1.533	4.559	PER IMP= 100.0
ROUTE	304.03	31	32	.01342	28.02	1.655	2.31189	1.600	3.262	
COMPUTE NM HYD	305.00	-	31	.03919	64.44	3 290	1.57396	1.633	2.569	PER IMP= 49.0

```
                                  FROM  TO                    PEAK        RUNOFF                TIME TO    CFS      PAGE =   4
                     HYDROGRAPH   ID    ID        AREA     DISCHARGE     VOLUME      RUNOFF       PEAK     PER
COMMAND            IDENTIFICATION  NO.   NO.     (SQ MI)     (CFS)       (AC-FT)   (INCHES)    (HOURS)   ACRE      NOTATION

ADD HYD                305.10 31&32  35        .05261       92.16        4.944     1.76216      1.600    2.737
*S TOTAL OLF AT CHICO AND MORRIS
*S****     OLF HYD 305.2 IS AP #22     *****
ADD HYD                305.20 35&33  32        .06840      156.37        6.435     1.76386      1.667    3.572
ROUTE                  305.22   32   33        .06840      127.02        6.435     1.76387      1.766    2.902
COMPUTE NM HYD         306.00    -   31        .03441       83.70        4.243     2.31187      1.600    3.801 PER IMP= 100.0
*S ROUTING SUB-BASIN 306 THRU 308 ( THRU WALL BETWEEN BASIN 306 AND 308)
ROUTE                  306.03   31   32        .03441       74.97        4.243     2.31187      1.667    3.404
*S SUB-BASIN 307 PONDS
COMPUTE NM HYD         307.00    -   34        .02937       64.35        2.258     1.44180      1.500    3.423 PER IMP=  40.0
COMPUTE NM HYD         308.00    -   31        .08051      133.77        6.512     1.51655      1.600    2.596 PER IMP=  45.0
ADD HYD                308.10 31&32  35        .11492      205.71       10.755     1.75468      1.633    2.797
*S EXISTING DETENTION BASIN IN BASIN 308
*S ROUTING RESERVOIR WITH 36" ORIFICE
*S****     PIPE FLOW 308.RES IS AP #23     *****
ROUTE RESERVOIR       308.RES   35   39        .11492       69.84       10.755     1.75468      2.100     .950 AC-FT=    4.46
*S
*S        OUTFLOW(CFS)    STORAGE(AC-FT)    ELEV(FT)
*S            0                0            5456
*S           19               0.09          5458
*S           48               1.25          5460
*S           69               4.09          5462
*S           83              10.36          5464
*S
COMPUTE NM HYD         309.00    -   31        .01291       29.71        1.064     1.54525      1.500    3.596 PER IMP=  47.0
ADD HYD                309.10 33&31  32        .08131      137.75        7.499     1.72914      1.766    2.647
*S DIVIDE BY CB CAPACITY ON CHICO STREET BETWEEN MH# S-704  TO  MH# S-743
*S OLF HYD 309.13 IS AT CHICO AND EUBANK
*S****     OLF HYD 309.13 IS AP #24     *****
DIVIDE HYD               CB11   32   33        .04222       30.00        3.894     1.72914      1.433    1.110
                       309.13  AND   37        .03909      107.75        3.605     1.72914      1.766    4.307
ADD HYD                CB11.1 33&36  38        .11594      115.00       10.851     1.75483      1.966    1.550
*S TOTAL PIPE FLOW AT CHICO AND EUBANK FROM THE CHICO SYSTEM
*S****     PIPE HYD CB11.2 IS AP #24     *****
ADD HYD                CB11.2 38&39  32        .23086      184.59       21.606     1.75476      1.966    1.249
COMPUTE NM HYD         310.00    -   38        .05825      145.16        6.710     2.15990      1.567    3.894 PER IMP=  90.0
COMPUTE NM HYD         311.00    -   39        .10616      208.97       11.041     1.95009      1.633    3.076 PER IMP=  75.0
COMPUTE NM HYD         312.00    -   33        .02461       71.05        2.756     2.09963      1.500    4.511 PER IMP=  85.0
*S BASIN 400 IS SOUTH OF CENTRAL
COMPUTE NM HYD         401.00    -   41        .03371       73.42        3.928     2.18485      1.633    3.403 PER IMP=  90.0
COMPUTE NM HYD         402.00    -   42        .03516       76.91        4.315     2.30112      1.633    3.418 PER IMP=  99.0
*S OLF HYD 103.13 THRU 303 AND 304 ON NORTH SIDE OF CENTRAL STREET
ROUTE                  103.12   15   43        .01204       49.25        1.351     2.10442      1.667    6.390
*S OLF HYD 204.13 THRU 402 ON SOUTH SIDE CENTRAL STREET
ROUTE                  204.12   86   44        .04164      115.32        4.487     2.02019      1.766    4.327
ADD HYD                402.10 42&44  45        .07680      181.32        8.802     2.14877      1.733    3.689
*S DIVIDE BY CB ON NORTH SIDE CENTRAL STREET BETWEEN MH# S-42  AND MH# S-102
*S OLF HYD 103.13 IS FLOW ON CENTRAL'S NORTH SIDE AT ELIZABETH AND CENTRAL
*S****     OLF HYD 103.13 IS AP #15     *****
DIVIDE HYD               CB14   43   42        .01168       42.00        1.310     2.10432      1.633    5.620
                       103.13  AND   44        .00037        7.25         .041     2.10432      1.667   30.987
*S DIVIDE BY CB ON SOUTH SIDE CENTRAL STREET BETWEEN MH# S-42  AND MH# S-102
*S OLF HYD 402.13 IS CENTRAL'S TOTAL SOUTH SIDE FLOW AT ELIZABETH AND CENTRAL
*S****     OLF HYD 402.13 IS AP #16     *****
DIVIDE HYD               CB15   45   46        .04224       49.00        4.841     2.14877      1.500    1.812
                       402.13  AND   47        .03456      132.32        3.961     2.14877      1.733    5.982
*S FROM MH# S-42  TO  MH# S-102
*S Q(CAP) = 276 CFS
ROUTE                  CB6.22   99   43        .20518      277.94       22.793     2.08298      1.766    2.117
ADD HYD                CB14.1 42&43  45        .21685      319.72       24.104     2.08412      1.700    2.304
*S TOTAL PIPE FLOW AT CENTRAL AND ELIZABETH
*S****     PIPE HYD CB15.1 IS AP #15 AND AP #16     *****
ADD HYD                CB15.1 45&46  42        .25909      368.72       28.945     2.09466      1.700    2.224
*S TOTAL PIPE FLOW AT ELIZABETH AND COCHITI
ADD HYD               401.1CB 42&41  71        .29280      441.03       32.873     2.10505      1.633    2.353
*S ROUTE PIPE HYD "401.1CB" THRU 403 IN 78" PIPE ON ELIZABETH STREET TO SOUTHERN
*S Q(CAP) = 430 CFS, AT N=0.014 AND SLOPE=0.0072
ROUTE                401.12CB   71   72        .29280      437.08       32.873     2.10505      1.667    2.332
*S OLF HYD 103.13 THRU 304 ON NORTH SIDE CENTRAL STREET; BETWEEN EUBANK AND ELIZ
ROUTE                  103.12   44   46        .00037        1.17         .041     2.11845      1.700    5.023
*S OLF HYD 402.13 THRU 402 ON SOUTH SIDE CENTRAL STREET; BETWEEN EUBANK AND ELIZ
ROUTE                  402.12   47   42        .03456      109.12        3.961     2.14892      1.833    4.933
```

```
                                FROM  TO                    PEAK        RUNOFF                TIME TO    CFS
                   HYDROGRAPH   ID    ID        AREA     DISCHARGE     VOLUME      RUNOFF     PEAK     PER
COMMAND          IDENTIFICATION NO.   NO.      (SQ MI)     (CFS)       (AC-FT)    (INCHES)   (HOURS)   ACRE     NOTATION

COMPUTE NM HYD        403.00    -    41        .05744      110.01       5.677     1.85327    1.600    2.992 PER IMP=  70.0
COMPUTE NM HYD        404.00    -    44        .04882       89.80       4.825     1.85327    1.633    2.874 PER IMP=  70.0
*S **** SUB-BASIN 405B ****
*S ** EASTERN HALF OF OLD BASIN 405 ****
COMPUTE NM HYD          405B    -    90        .02687       74.78       3.107     2.16836    1.533    4.349 PER IMP=  90.0
*S ROUTE 405B THRU BASIN 404 IN FUTURE DRAINAGE CHANNEL ***
*S FUTURE DRAINAGE CHANNEL TO BE LOCATED ON NORTH EDGE OF BASIN 404 ***
ROUTE                 R.405B   90    91        .02687       74.45       3.107     2.16837    1.533    4.330
*S  ADD SUB-BASIN 404 TO R.405B - NEW AP-29B ***
ADD HYD               AP.29B 91&44   92        .07569      153.44       7.933     1.96511    1.567    3.168
*S ROUTE AP.29B THROUGH PROPOSED 404 POND AT NW CORNER OF BASIN 404
ROUTE RESERVOIR      404POND   92    44        .07569       86.75       7.933     1.96512    1.833    1.791 AC-FT=    2.61
*S DIVIDE TOTAL FLOW AT NORTHWEST CORNER OF BASIN 404 INTO STORM DRAIN FLOW *
*S AND OVERFLOW THAT SPILLS INTO EUBANK BOULEVARD AT BELL *
DIVIDE HYD          AP29B.SD   44    90        .07295       75.00       7.645     1.96510    1.667    1.606
                   AP29B.OLF  AND    91        .00274       11.75        .287     1.96511    1.833    6.702
COMPUTE NM HYD        506.00    -    56        .01509       32.37       1.549     1.92516    1.567    3.352 PER IMP=  75.0
*S ROUTING 506 THRU 404 ON EUBANK BLVD TO AP-29A
ROUTE                 AP.29A   56    58        .01509       29.83       1.549     1.92516    1.633    3.089
*S DIVIDE FLOW FROM SOUTHERN BLVD (ROUTED TO BELL) INTO SD FLOW *
*S AND OVERFLOW THAT CONTINUES NORTH ON EUBANK BLVD *
DIVIDE HYD          AP29A.SD   58    44        .01509       29.83       1.549     1.92512    1.633    3.089
                   AP29A.OLF  AND    92        .00000         .00        .000      .00000    -.033     .000
*S  ADD AP29A.OLF TO AP29B.OLF TO OBTAIN TOTAL STREET FLOW AT EUB/BELL***
ADD HYD            AP29C.OLF 92&91   56        .00274       11.75        .287     1.96511    1.833    6.702
ROUTE              ACOMA.OUT   56    91        .00274       11.51        .287     1.96699    1.866    6.565
*S  ADD AP29A.SD TO AP29B.SD TO OBTAIN TOTAL SD FLOW AT EUBANK/BELL ***
ADD HYD             AP29C.SD 44&90   96        .08804      104.08       9.195     1.95825    1.667    1.847
*S ROUTING STORM DRAIN FLOW (AP29C.SD) AT EUBANK/BELL
*S NORTH ALONG EUBANK BLVD TO CONFLUENCE WITH HOME DEPOT SD (MH-1942)
ROUTE               R.APG.SD   96    92        .08804      103.18       9.195     1.95826    1.700    1.831
COMPUTE NM HYD        406.00    -    44        .01810       45.54       2.173     2.25016    1.567    3.930 PER IMP=  95.0
ADD HYD               406.10 42&44   45        .05266      130.71       6.133     2.18369    1.833    3.878
*S DIVIDE BY CB ON NORTH SIDE CENTRAL STREET BETWEEN MH# S-4  AND MH# S-42
*S****     OLF HYD 103.23 IS AP #18     *****
DIVIDE HYD              CB16   46    42        .00037        1.17        .041     2.11458    1.700    5.023
                      103.23  AND    44        .00000         .00        .000      .00000    -.033     .000
*S DIVIDE BY CB ON SOUTH SIDE CENTRAL STREET BETWEEN MH# S-4  AND  MH# S-42
*S****     OLF HYD 406.13 IS AP #17     *****
DIVIDE HYD              CB17   45    48        .03265       49.00       3.802     2.18369    1.567    2.345
                      406.13  AND    49        .02002       81.71       2.331     2.18369    1.833    6.379
*S TOTAL PIPE FLOW AT CENTRAL AND EUBANK FROM EXISTING 66"
*S****     PIPE HYD CB17.1 IS AP #17     *****
ADD HYD               CB17.1 42&48   40        .03301       50.17       3.843     2.18293    1.700    2.375
*S DIVIDE PIPE HYD CB17.1 BY MAXIMUM PIPE CAPACITY OF 60" IN EUBANK
DIVIDE HYD           CB17.13   40    43        .03301       50.17       3.843     2.18293    1.700    2.375
                    CB17.OLF  AND    48        .00000         .00        .000      .00000    -.033     .000
COMPUTE NM HYD        501.00    -    51        .01967       41.55       2.275     2.16836    1.633    3.301 PER IMP=  90.0
*S ROUTING 213 THRU 501 ON SOUTHERN STREET
ROUTE                 213.02   24    52        .00828       12.54       1.021     2.31188    1.800    2.366
ADD HYD               403.10 41&52   53        .06572      118.31       6.698     1.91102    1.633    2.813
*S TOTAL OLF AT SOUTHERN AND ELIZABETH
ADD HYD               501.10 51&53   52        .08539      159.86       8.973     1.97030    1.633    2.925
*S ADD PIPE HYD 401.12CB WITH OLF HYD 501.1 FOR PROPOSED PIPE
ADD HYD               501.20 72&52   71        .37819      592.24      41.846     2.07462    1.667    2.447
*S ROUTING 501.2 THRU 502 ON ELIZABETH STREET WITH PROPOSED 90" PIPE
*S Q(CAP) = 584 CFS, AT SLOPE=0.0067
ROUTE                 501.22   71    73        .37819      587.82      41.846     2.07462    1.667    2.429
COMPUTE NM HYD        502.00    -    52        .19070      313.77      16.069     1.57996    1.633    2.571 PER IMP=  49.0
COMPUTE NM HYD        503.00    -    55        .18018      290.84      15.045     1.56562    1.633    2.522 PER IMP=  48.0
COMPUTE NM HYD        504.00    -    56        .00886       15.57        .482     1.02027    1.500    2.746 PER IMP=  10.0
COMPUTE NM HYD        505.00    -    59        .06230       72.84       3.390     1.02027    1.633    1.827 PER IMP=  10.0
*S TOTAL PROPOSED PIPE FLOW AT END OF SUB-BASIN 502
ADD HYD               502.10 52&73   72        .56889      893.16      57.915     1.90881    1.667    2.453
ADD HYD               504.10 56&55   53        .18904      301.08      15.527     1.54005    1.633    2.489
ADD HYD               505.10 53&59   52        .25134      373.91      18.917     1.41121    1.633    2.324
*S TOTAL FLOW TO PROPOSED DETENTION BASIN
ADD HYD               505.20 52&72   73        .82023     1264.54      76.832     1.75633    1.633    2.409
*S ROUTING PROPOSED RESERVOIR WITH 66" OUTLET
ROUTE RESERVOIR      504.RES   73    71        .82023      291.91      76.832     1.75633    2.333     .556 AC-FT=   43.11
*S
*S          OUTFLOW(CFS)    STORAGE(AC-FT)    ELEV(FT)
```

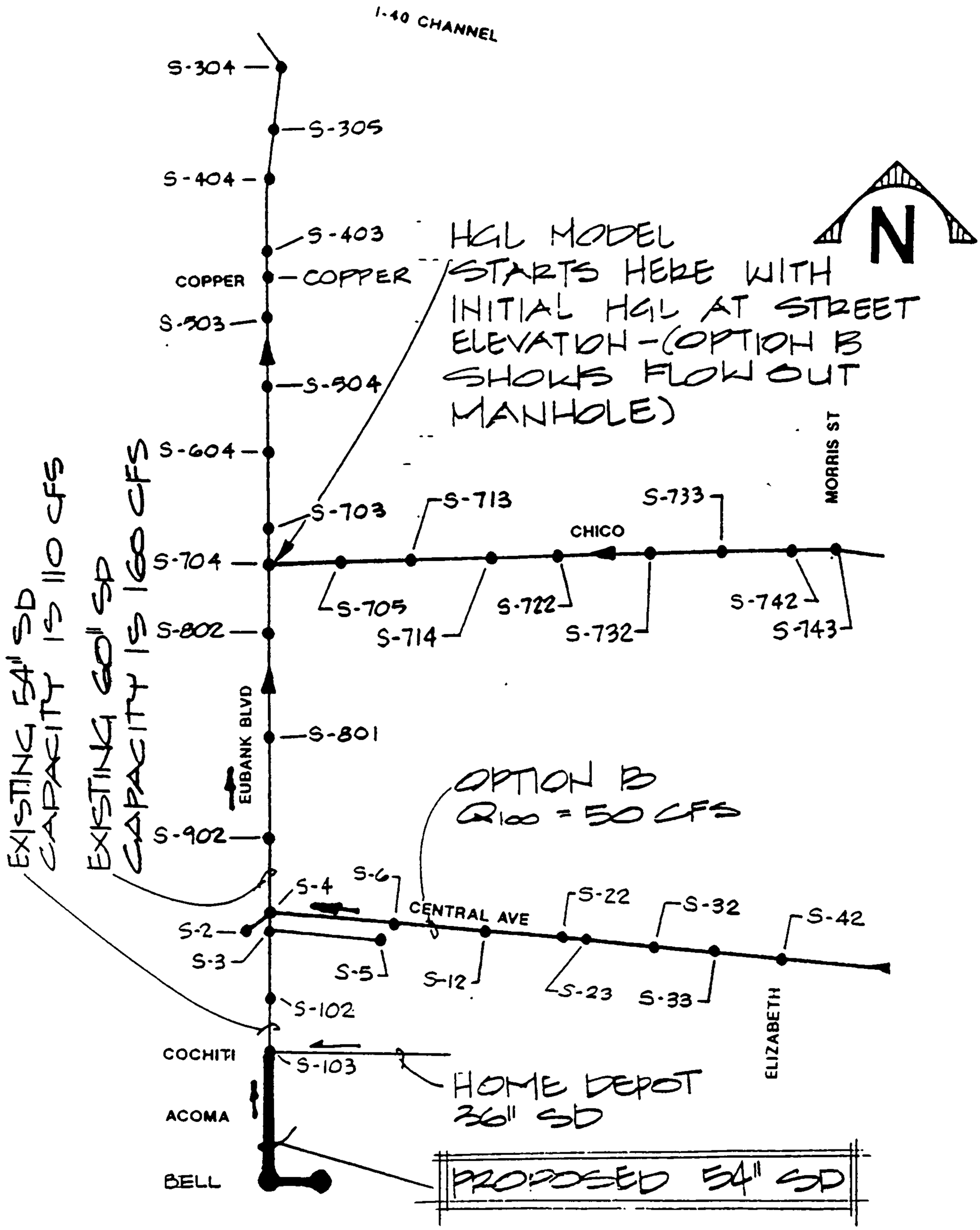

FIGURE 1
SCHEMATIC OF COA SD SYSTEM

SMITH ENGINEERING COMPANY

APPENDIX A

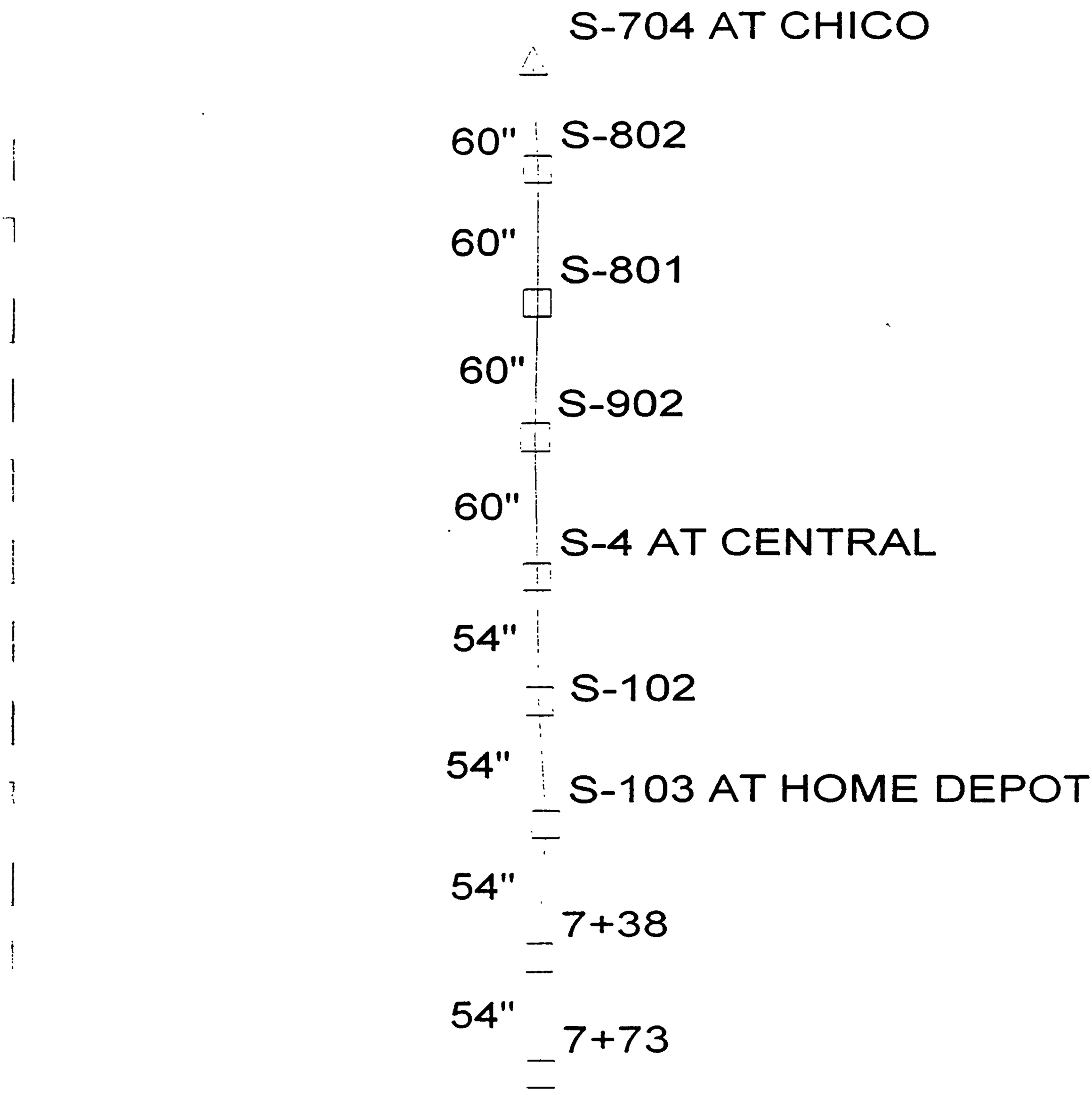
S-704 AT CHICO
60"
S-802
60"
S-801
60"
S-902
60"
S-4 AT CENTRAL
54"
S-102
54"
S-103 AT HOME DEPOT
54"
7+38
54"
7+73

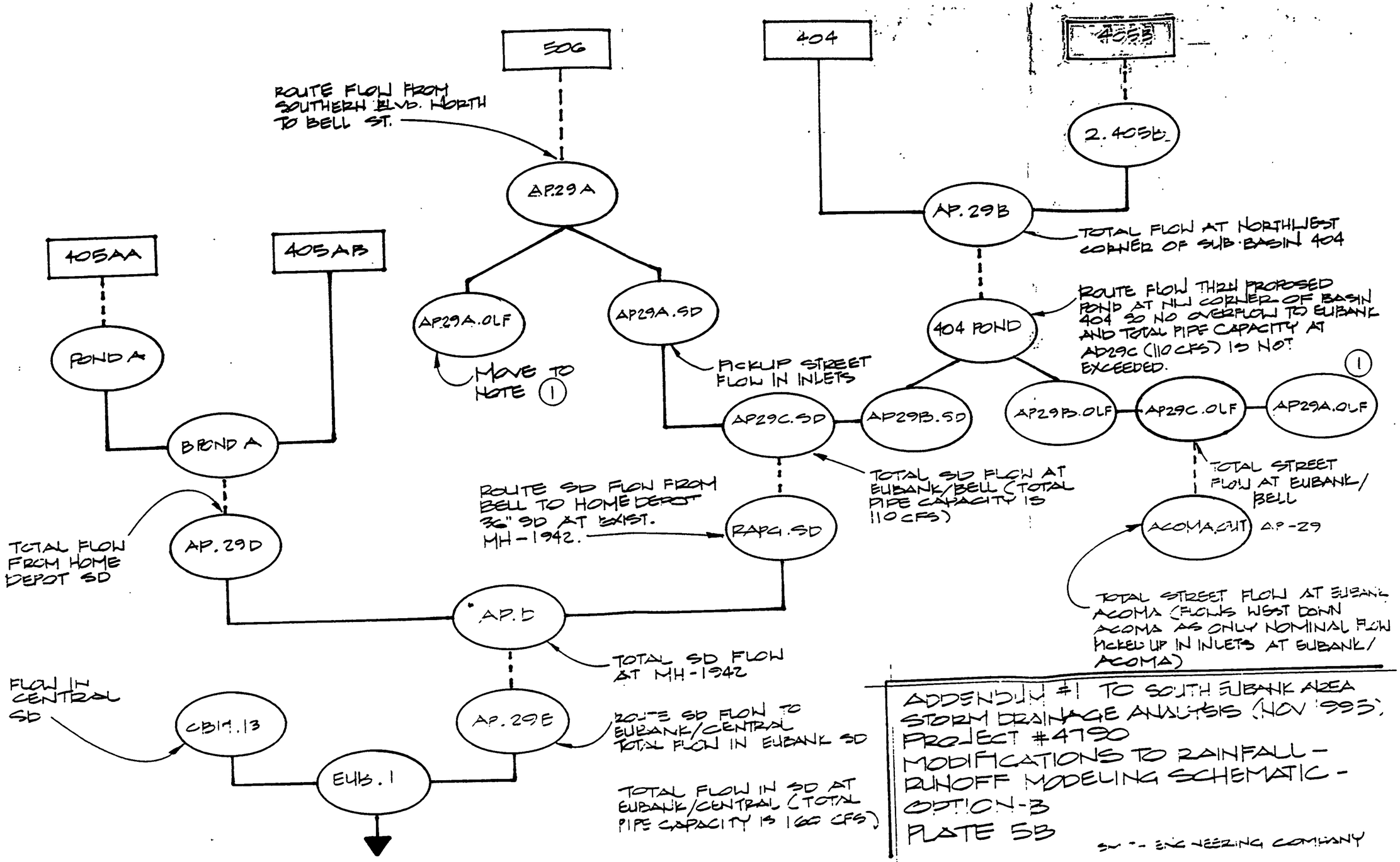

ADDENDUM #1 TO SOUTH EUBANK AREA STORM DRAINAGE ANALYSIS (NOV 1995)
PROJECT #4790
MODIFICATIONS TO RAINFALL-RUNOFF MODELING SCHEMATIC - OPTION-3
PLATE 5B

SM - ENGINEERING COMPANY

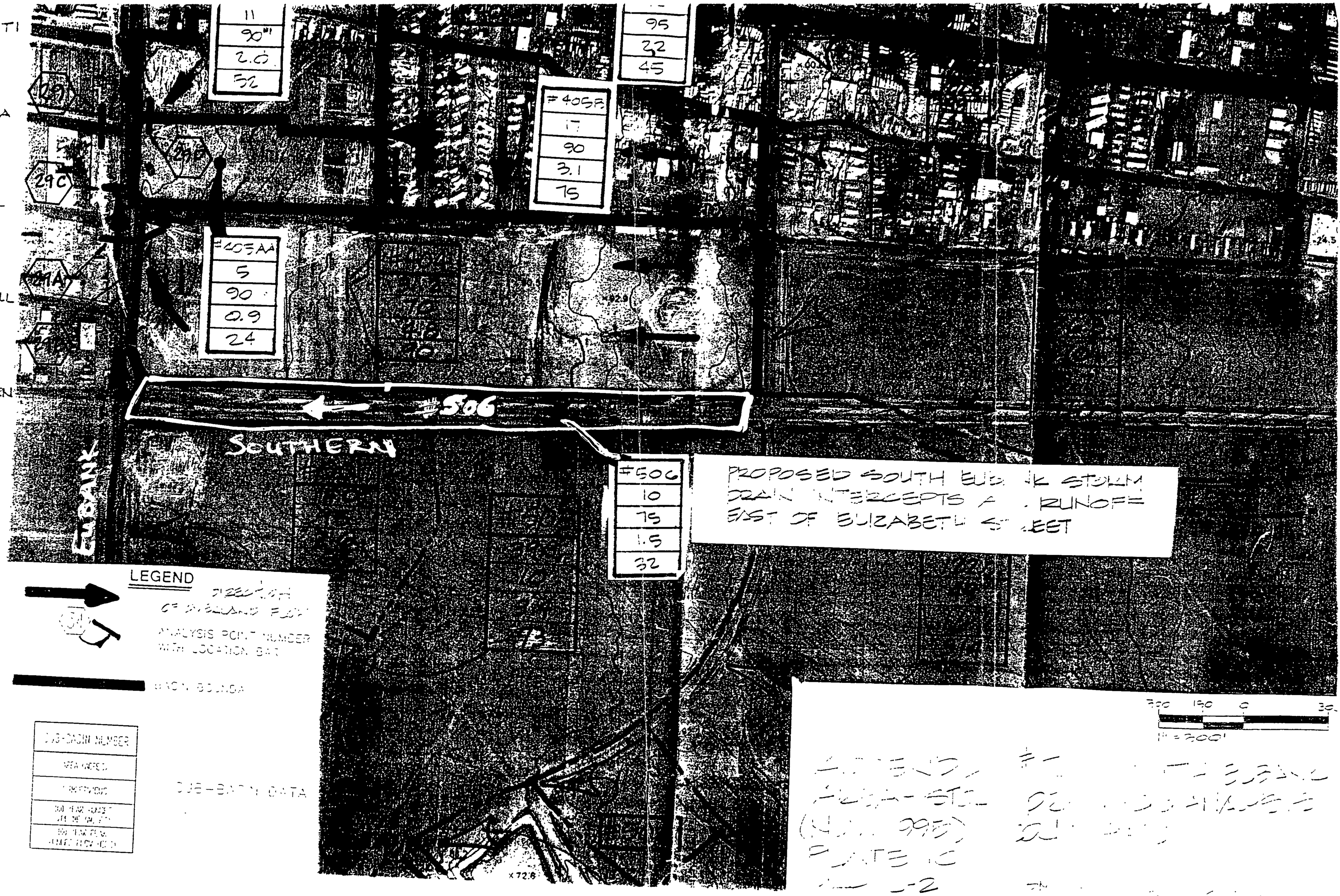
C CHITI
OMA
29C
29A
TRUMBULL
SOUTHERN
EUBANK
11
90"
2.0
52
95
22
45
#405B
17
90
3.1
75
#405AA
5
90
0.9
24
#506
10
75
1.5
32
PROPOSED SOUTH EUBANK STORM DRAIN INTERCEPTS A RUNOFF EAST OF ELIZABETH STREET
LEGEND
ANALYSIS POINT NUMBER WITH LOCATION BAR
SUB-BASIN NUMBER
SUB-BASIN DATA
300 150 0 300
1" = 300'

TABLE 1. SUMMARY OF BASIN PARAMETERS

Basin	Area (ac)	Tp (hrs)	Land Treatment (%) A	B	C	D	100-Yr 6-Hr Peak Q (cfs)	100-Yr 6-Hr Vol (ac-ft)
404	31	0.26	10	20	0	70	90	4.8
405B	17	0.15	0	10	0	90	75	3.1
405AA	5	0.13	0	10	0	90	24	0.9
405AB	11	0.13	0	10	0	90	52	2.0
506	10	0.21	10	15	0	75	32	1.5
406*	12	0.20	1	0	4	95	45	2.2

* Sub-basin 406 does not contribute to the study area, but a portion of its original area was transferred to sub-basin 405AB.

TABLE 2. SUMMARY OF PEAK FLOWS AND RUNOFF VOLUMES AT ANALYSIS POINTS

Analysis Point	Description	100-yr 6-hr Peak Q Overland (cfs)	100-yr 6-hr Peak Q in Storm Drain (cfs)
29	Flow west on Acoma	0	N/A
29A	Flow just south of Eubank/Bell	30	N/A
29B	Flow at NW corner of 404 upstream of proposed detention basin	153	N/A
29C	Flow just north of Eubank/Bell	0	104
29D	Flow from Home Depot SD	N/A	3
29E	Flow just south of Eubank/Central (Capacity is 110 cfs +/-)	0	106*

* Total flow in Eubank Storm Drain is sum of routed flow from sub-basin 506 (30 cfs), restricted flow from NW corner of sub-basin 404 (87 cfs), and restricted flow from Home Depot (3 cfs). Due to differences in timing and effects of routing this total flow is 106 cfs.

Recommendations

It is important to insure that as development proceeds in the study area that the capacity of the existing and proposed storm drains will not be exceeded. The following recommendations are made based on the updated hydrology summarized in the previous paragraphs:

- Collect the 100-year peak flow of 32 cfs from sub-basin 506 (Southern Blvd. Flow) near the northwest corner of sub-basin 404.
- Reduce the 100-year peak flow generated by sub-basin 404 (including the historic flow contributed by sub-basin 405B) from 153 cfs to 87 cfs. This would require a detention basin with an approximate volume of 2.6 acre-feet.
- Restrict the 100-year peak flow from Home Depot (sub-basins 405AA and 405AB) to 3 cfs as presented in the "Drainage Report for Albuquerque II Home Depot".
- Reduce the 100-year discharge that flows west on Acoma to 0 cfs.

Should you have any questions or comments about this analysis please call Steve Kemna at (505) 884-0700.

Sincerely,

Smith Engineering Company

Stephen Paul Kemna

Stephen P. Kemna, P.E.

6400 Uptown Boulevard, N.E. Suite 500E Albuquerque, N. M. 87110 Telephone 505/884-0700 Fax 505/884-2376

- A future detention basin has been modeled at the northwest corner of sub-basin 404 in order to restrict the 100-year peak flows entering the existing and proposed Eubank Storm Drain, and in order to eliminate runoff flowing west down Acoma.

Analysis of Storm Drain Capacity

An analysis of the existing Eubank Storm Drain System (from Chico to Cochiti) and the proposed Eubank Storm Drain System (Cochiti to Bell) was performed using the program, StormCAD v 1.5. This program evaluates the capacity of these storm drains based on the hydraulic grade line. A schematic of this storm drain system is shown in Figure 1. The output from StormCAD is shown in Appendix A.

The results from StormCAD show that the existing Eubank Storm Drain (from Chico to Cochiti) has a capacity of about 160 cfs. Option B shows that about 50 cfs will be flowing west down the Central Avenue Storm Drain and joining the Eubank Storm Drain. This results in a capacity of only about 110 cfs for the Eubank Storm Drain from Central to Bell. This StormCAD model was started with an HGL at street level at Chico due to the fact that Option B predicts flow out of the manhole at Chico/Eubank during the 100-year event.

The "South Eubank Area Storm Drainage Analysis" estimated the capacity of the Eubank Storm Drain from Central to Bell at 140 cfs. In fact, our updated analysis shows that the capacity of this system is only 110 cfs.

Hydrologic Analysis

The AHYMO model, Optionb.dat, was modified as described in the previous paragraphs. A drainage map showing the updated sub-basins is shown on Plate 1C. The updated 100-year 6-hour AHYMO model, Eubsdb.dat, is shown as a schematic in Plate 5B. A 10-year 6-hour analysis was also performed using the AHYMO model, Eubsdb10.dat. The summary output for the 100-year event is included in Appendix B.

The results of this updated analysis show that about 32 cfs is generated by sub-basin 506 for the 100-year event. This flow turns north onto Eubank Boulevard. Sub-basin 405B produces a 100-year peak flow of 75 cfs that has historically flowed south into sub-basin 404. The combined peak flow at the northwest corner of 404 is 153 cfs. A proposed detention basin was modeled at this location to reduce this peak flow so as not to exceed the capacity of the proposed Eubank Storm Drain (Cochiti to Bell) which is 110 cfs. A summary of the hydrologic parameters used in this amendment is shown in Table 1. A summary of the peak flows at the analysis points is shown in Table 2.

Smith Engineering Company
A Full Service Engineering Company

February 2, 1998

Loren D. Meinz
Civil Engineer
City of Albuquerque Public Works
Hydrology Division
P.O. Box 1293
Albuquerque, NM 87103

Re: Amendment #1 to the South Eubank Area Storm Drainage Analysis (November 1995)

Dear Mr. Meinz:

Smith Engineering Company is pleased to submit to your office an amendment to the hydrology for the South Eubank Area Storm Drainage Analysis (November 1995). This Amendment #1 updates the hydrology that contributes to the proposed Eubank Storm Drain between Cochiti Road and Bell Avenue. A total drainage area of about 86 acres has been reanalyzed based on field inspections and hydraulic analysis of the existing Eubank Storm Drain System. The following paragraphs describe this analysis.

Hydrologic Assumptions

Five sub-basins have been delineated that contribute runoff to Eubank Boulevard between Cochiti Road and Bell Avenue. These sub-basins are 506, 404, 405B, 405AA, and 405AB. These sub-basins are shown on Plate 1C. Sub-basin 506 represents Southern Avenue from Elizabeth Street to Eubank Boulevard. This flow is assumed to flow north on Eubank. Sub-basin 405B flows west and south into sub-basin 404. The combined flow from 404 collects at the northwest corner of this sub-basin where it presently flows north in Eubank and then west down Acoma. Sub-basins 405AA and 405AB represent the drainage at the Home Depot as described in the "Drainage Report for Albuquerque II Home Depot" (April 28, 1994). The modeling of the Home Depot limits the outflow from this site to a 100-year peak flow of 3 cfs as described in their drainage report. The hydrologic analysis for this amendment analyzed the 100-year 6-hour event (also modeled in the original "South Eubank Area Storm Drainage Analysis"). All sub-basins south of Southern Avenue will not enter our project area. They will either flow west in a future Southern Storm Drain System or south in a future South Eubank Storm Drain System (as described in the "Manzano Mesa Master Drainage Study", August 1996). All hydrologic analysis was performed for future developed conditions with Option B in place. Option B assumes that the future South Eubank Storm Drain System that will extend down Elizabeth Street will intercept flow from the east of the study area.

Changes to Option B

The following changes were made to the AHYMO Option B model (Optionb.dat) used in the "South Eubank Area Storm Drainage Analysis" report.

- Based on the "Drainage Report for Albuquerque II Home Depot" a portion of sub-basin 406 was added to sub-basin 405AB.
- Sub-basin 405 was split into 405AA, 405AB, and 405B based on information obtained from field visits and the "Drainage Report for Albuquerque II Home Depot".
- Sub-basin 405B was modeled with a land treatment of 90% "D".

RECEIVED
FEB 17 2000
HYDROLOGY SECTION

6400 Uptown Boulevard, N E Suite 500E Albuquerque, N M 87110 Telephone 505/884-0700 Fax 505/884-2376

City of Albuquerque

February 17, 2000

Bruce Stidworthy, PE
Bohannan Huston, Inc.
7500 Jefferson NE
Albuquerque, NM 87109

Re: Costco Wholesale - Eubank Grading and Drainage Plan
Engineer's Stamp dated 2-15-00 (L21/D37)

Dear Mr. Stidworthy,

Based upon the information provided in your resubmittal dated 2-17-00, the above referenced site is approved for Site Development Plan for Subdivision, Site Development Plan for Building Permit and Final Plat.

Please be advised that prior to Building Permit approval, a more comprehensive grading and drainage plan will be required.

If you have any questions, you can contact me at 924-3986

Sincerely,

Bradley L. Bingham

Bradley L. Bingham, PE
Hydrology Review Engineer

C: Fred Aguirre, DRB
file

DRB Case No 1000262
DRC Project No.
Prelim. Plat Approved:
Prelim. Plat Expires:
Site Plan Approved:

Date Submitted:

Figure 12

INFRASTRUCTURE LIST

EXHIBIT "A"
TO SUBDIVISION IMPROVEMENTS AGREEMENT
DEVELOPMENT REVIEW BOARD (D.R.B.) REQUIRED INFRASTRUCTURE LIST

COSTCO WHOLESALE WAREHOUSE

Following is a summary of Public/Private Infrastructure required to be constructed or financially guaranteed for the above development. This listing is not necessarily a complete listing. During the SIA process and/or in the review of the constrution drawings, if the DRB Chair determines that appurtenant items and/or unforeseen items have not been included in the infrastructure listing, the DRC Chair may include those items in the listing and related financial guarantee. Likewise, if the DRC Chair determines that appurtenant or non essential items can be deleted from the listing, those items may be deleted as well as the related portions of the financial guarantees. All such revisions require approval by the DRC Chair, the User Department and agent/owner. If such approvals are obtained, these revisions to the listing will be incorporated administratively. In addition, any unforeseen items which arise during construction which are necessary to complete the project and which normally are the Subdivider's responsibility will be required as a condition of project acceptance and close out by the City.

Size	Type Improvement	Location	From	To
ROADWAY IMPROVEMENTS				
29' WIDE	ARTERIAL PAVING W/5' BIKE LANE AND PCC C&G NORTH SIDE ONLY	SOUTHERN	EUBANK	ELIZABETH
14' WIDE	BIKE PATH	SOUTHERN	EUBANK	ELIZABETH
29' WIDE	ARTERIAL PAVING W/5' BIKE LANE AND PCC C&G AND SIDEWALK EAST SIDE ONLY	EUBANK	SOUTHERN	COSTCO N. PROPERTY LINE
4' WIDE	TEMPORARY BIKE PATH	S. OF SOUTHERN	EUBANK	ELIZABETH
	TRIANGULAR ISLANDS	AT RIGHT-IN/RIGHT-OUT DRIVEWAYS		
	NE QUADRANT OF INTERSECTION INCLUDING ARTERIAL PVMT & C&G	EUBANK/SOUTHERN		
24' WIDE	ARTERIAL PAVING	EUBANK/SOUTHERN	500' S. OF SOUTHERN	SOUTHERN
17' WIDE	ARTERIAL PAVING W/12' NORTHBOUND RIGHT-TURN LANE AND 5' BIKE LANE	EUBANK/SOUTHERN	500' S. OF SOUTHERN	SOUTHERN
WIDTH VARIES	CONNECTI THE NEW SOUTHERN ALIGNMENT TWEXISTING SOUTHERN WEST OF EUBANK	SOUTHERN	EUBANK	APPROX 500' W. OF EUBANK
	LENGHTEN LEFT TURN LANES	EUBANK	NORTH AND SOUTH APPROACHES TO CENTRAL	
12' WIDE	SOUTHBOUND LANE	EUBANK	CENTRAL	SOUTHERN

RECEIVED
FEB 17 2000
HYDROLOGY SECTION

Size	Type Improvement	Location	From	To
ROADWAY IMPROVEMENTS CONT'D				
12' WIDE	ARTERIAL PV,MT RT. TURN DECEL LANE	SOUTHBOUND ELIZABETH AT COSTCO ENTRANCE		
12' WIDE	ARTERIAL PVMT. RT. TURN DECEL LANE	WESTBOUND SOUTHERN AT COSTCO ENTRANCE		
12' WIDE	ARTERIAL PVMT, RT. TURN DECEL LANE	NORTHBOUND EUBANK AT THE 2 COSTCO ENTRANCES		
UTILITIES				
10"	WATERLINE	SOUTHERN	EUBANK	ELIZABETH
10"	SANITARY SEWER	SOUTHERN	EUBANK	ELIZABETH
DRAINAGE				
36" – 42"	STORM DRAIN	EUBANK	NORTH PROPERTY LINE	SOUTHERN
48"	STORM DRAIN	ESMT N. OF COSTO BLDG.	E. PROP. LINE OF COSTCO	EUBANK
	~~CONFINE THE EXISTING FLOODPLAIN ON THE SITE TO THE PROPOSED POND~~			
	Public TEMP POND Agreement & Covenant	Public Drainage Esmt		

Prepared by:_____
Firm: Bohannan Huston

Development Review Board Member Approval

Transportation Development Date	Utility Development Date	Parks and Recreation D Date
City Engineer Date	AMAFCA Date	DRB Chair Date

DRC REVISIONS

REVISIONS	DATE	DRC CHAIR	USER DEPT	AGENT/OWNER
1				
2				

DRAINAGE INFORMATION SHEET

PROJECT TITLE: Costco Wholesale ZONE ATLAS/DRNG. FILE # L-21 / D-37

DRB #: _____ EPC #: 99-136 WORK ORDER #: 6382.81

LEGAL DESCRIPTION: Tract A & 1C Manzano Mesa

CITY ADDRESS: NE Corner of Southern and Eubank

ENGINEERING FIRM: Bohannan Huston, Inc. CONTACT: Lynn Mazur, P.E.

ADDRESS: 7500 Jefferson NE, Albuquerque, NM 87109 PHONE: (505) 823-1000

OWNER: Costco Wholesale CONTACT: Peter Kahn

ADDRESS: _____ PHONE: _____

ARCHITECT: _____ CONTACT: _____

ADDRESS: _____ PHONE: _____

SURVEYOR: _____ CONTACT: _____

ADDRESS: _____ PHONE: _____

CONTRACTOR: _____ CONTACT: _____

ADDRESS: _____ PHONE: _____

TYPE OF SUBMITTAL:

- ____ DRAINAGE REPORT
- ____ DRAINAGE PLAN
- ____ FINAL GRADING & DRAINAGE PLAN
- ____ GRADING PLAN
- ____ EROSION CONTROL PLAN
- ____ ENGINEER'S CERTIFICATION
- X OTHER: Addendum No. 1 to Drainage Report

PRE-DESIGN MEETING:

- ____ YES
- ____ NO
- ____ COPY PROVIDED

CHECK TYPE OF APPROVAL SOUGHT:

- ____ SKETCH PLAT APPROVAL
- ____ PRELIMINARY PLAT APPROVAL
- ____ S. DEV. PLAN FOR SUBD. APPROVAL
- ____ S. DEV. PLAN FOR BLDG. PERMIT APPROVAL
- ____ SECTOR PLAN APPROVAL
- ____ FINAL PLAT APPROVAL
- ____ FOUNDATION PERMIT APPROVAL
- ____ BUILDING PERMIT APPROVAL
- ____ CERTIFICATE OF OCCUPANCY APPROVAL
- ____ GRADING PERMIT APPROVAL
- ____ PAVING PERMIT APPROVAL
- ____ S.A.D. DRAINAGE REPORT
- ____ DRAINAGE REQUIREMENTS
- ____ SUBDIVISION CERTIFICATION
- X OTHER For information only (SPECIFY)

DATE SUBMITTED: 07/27/00

BY: Bohannan Huston, Inc.

Revised 02/98

July 27, 2000

BOHANNAN-HUSTON, INC

Courtyard One

7500 JEFFERSON NE

Albuquerque

NM 87109-4335

voice 505 823.1000

fax 505 821 0892

Loren D. Meinz, P.E.
Hydrology Project Engineer
City of Albuquerque
Public Works Department
400 Marquette Avenue NW
Third Floor, Room 301
PO Box 1293
Albuquerque, NM 87103

Re: Addendum No. 1 for "Drainage Report for Costco Wholesale" dated March 16, 2000
Project No. 6382.81

Dear Mr. Meinz:

Addendum No. 1 to the referenced Drainage Report is presented for your information. It addresses revisions to the offsite drainage plan for the Costco Wholesale retail store at the northeast corner of Southern Boulevard and Eubank Boulevard.

Detention Pond Riser Pipe

The original drainage plan proposed a Type "D" inlet in the detention pond to drain the water. However, the City expressed concern that sediment control measures would not be adequate to prevent the inlet from filling with silt and debris. Therefore, the inlet was replaced with an 18-inch corrugated metal (CMP) riser pipe with holes drilled in it and an open top to drain water directly into the 36-inch storm drain. The top of the pipe will be 2.5 feet above the pond bottom with a gravel pad around it. The gravel will allow water to flow through it while filtering out sediment.

The 18-inch riser pipe will have ten rows of 1-inch holes at 4-inch spacing (see Attachment 4). The top of the pipe will be open with a fabricated grate cover. It will be connected to the 36-inch storm drain with a concrete collar. See Sheet 34C in Attachment 1, which has the revised offsite drainage plan sheets.

Detention Pond Volume

The detention pond is sloped at a slight grade from south to north toward the outlet point. To maintain a minimum three feet of freeboard, the pond bottom was lowered one-half foot. The detention pond layout is shown on Sheet 34B in Attachment 1. The revised pond volume rating curve is in Attachment 2.

BHI sent this in to me. I looked at it. MH ELEV Rim look wrong in table.

? where did she get the HGL 5466.50 to start with?

Loren.

Smith had lower HGL in Eubank - so might be ok.

Concrete Rundown

Tract 2 is an undeveloped site directly east of the Costco site. In the interim condition, runoff will flow to the west toward Costco. In the Drainage Report, the runoff from this tract flowed over the eastern edge of the detention pond. The City was concerned that the runoff would have the potential to cause erosion. Therefore, a temporary berm was added along the southern and eastern sides of the detention pond to divert the existing overland flow to a concrete rundown. The rundown will be three feet wide by one foot high with a riprap erosion control pad on the pond bottom.

When Tract 2 is developed, runoff will be conveyed to the pond by other means, and the temporary berm could be removed, if required. The temporary berm is shown on Sheet 34B, and a detail of the concrete rundown is shown on Sheet 34C in Attachment 1.

Hydrology

The 100-year peak flow rates for the interim and ultimate conditions were calculated for the Drainage Report. The detention pond inflow rates did not change for Addendum No. 1. However, the riser pipe will affect the outflow. The riser pipe outflow rating curves and the revised pond storage/stage discharge curve were run in the AHYMO model. The flow in the 36-inch storm drain increased for both conditions, but the total flow in the Eubank Storm Drain at Bell Avenue decreased. The decreased flow is due to the fact that the riser pipe will cause water to be detained in the pond for a longer period. Therefore, the peak outflow will be added at a lower point on the 100-year peak flow hydrograph for the Eubank Storm Drain. The revised AHYMO Summary Tables for interim and ultimate conditions are in Attachment 3. The following table summarizes peak flow rates at major analysis points in the system.

TABLE 1
100-YEAR PEAK FLOW RATES

Analysis Point	Interim Flow (cfs)	Ultimate Flow (cfs)
Detention Pond Inflow	159	133
Detention Pond Outflow	55	47
36-inch Storm Drain Flow to Eubank SD	68	64
Eubank SD Flow at Bell Avenue	99	102

Hydraulics

The addition of the riser pipe and increase in pond storage volume will affect the hydraulic function of the storm drain system. The riser pipe will restrict outflow from the pond. A spreadsheet was created to calculate the outflow through the riser pipe at various water surface elevations in the pond. The outflow will be orifice flow through the drilled holes up to the top of the riser. At that point, the outflow will be a combination of orifice and weir flow.

Since there is more inflow in the interim condition, an 8-inch orifice plate will be welded on top of the riser pipe to restrict the outflow. When the Elizabeth Street storm drain is constructed (ultimate conditions), the orifice plate should be removed. At the 100-year water surface elevation, the outflow will be 55 cfs for interim conditions (depth = 6.0 feet) and 47 cfs for ultimate conditions (depth = 4.3 feet). There will be 1.5

feet of freeboard for the interim condition and 3.0 feet of freeboard for the ultimate condition. The riser outflow spreadsheets are included in Attachment 4.

The outflow at incremental depths was compared with inlet control on the 36-inch storm drain. The lesser of the two values will control the pond outflow. See the "Detention Pond Outflow" spreadsheets in Attachment 5.

The revised flow rates were used to calculate the interim and ultimate hydraulic grade lines (HGL) in the 36-inch storm drain. The Storm & Sanitary SelectCAD design software was used to generate the HGL. The results indicate that the HGL will remain below finished grade until the last manhole (MH 6) where the pipe turns to tie to the Eubank Storm Drain. A bolted cover is proposed so that pressurized flow will not surcharge the manhole. The revised interim and ultimate HGL's are shown on Sheet 34A in Attachment 1. The HGL calculations are included in Attachment 6.

If you have any questions or comments regarding Addendum No. 1, please contact me at (505) 823-1000.

Sincerely,
Bohannan Huston, Inc.

Lynn M. Mazur

Lynn M. Mazur, P.E.
Water Resources Group

LMM\gr
Enclosure

cc: Bruce Stidworthy, P.E., Bohannan Huston, Inc. (w/enclosure)

ATTACHMENTS

1. Offsite Drainage Plan Sheets

2. Pond Volume Rating Curve

3. AHYMO Summary Tables
   a. Interim Conditions
   b. Ultimate Conditions

4. Riser Pipe Outflow Spreadsheets
   a. Int. Conds.
   b. Ult. Conds.

5. Detention Pond Outflow

6. Hydraulic Grade Line Calculations
   a. Int. Conds.
   b. Ult. Conds.

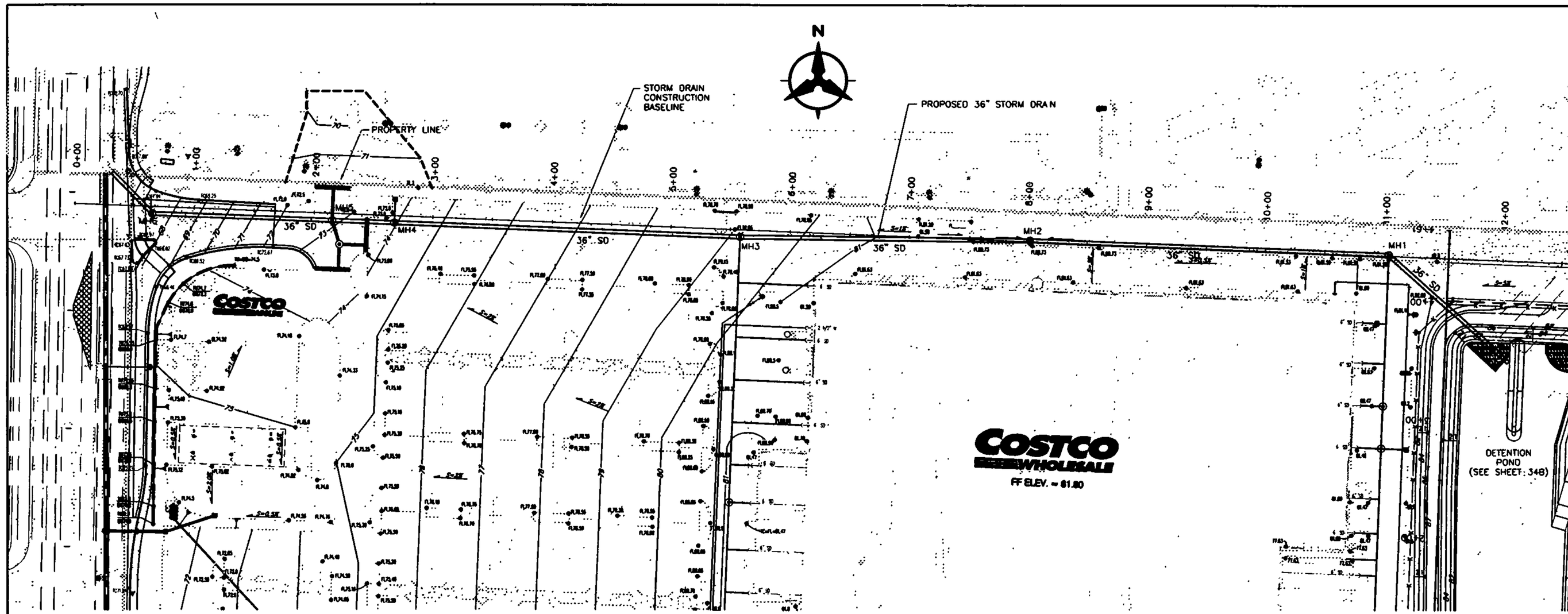

GENERAL NOTES

1. THIS CONTRACTOR SHALL BE RESPONSIBLE FOR THE COMPLETE INSTALLATION OF ALL WORK RELATED TO MECHANICAL UTILITIES AS SHOWN ON THIS PLAN INCLUDING: TRENCHING, BACKFILL, SUPPORTS, CLEANOUT PADS, SERVICE STUBS AND BOXES, SERVICE LINES, TESTING, CLEANING, AND STERILIZING. ANY WORK NOT ACCEPTED BY THE ARCHITECT OR ENGINEER DUE TO IMPROPER WORKMANSHIP OR LACK OF PROPER COORDINATION SHALL BE REMOVED AND CORRECTLY INSTALLED AT THE CONTRACTOR'S EXPENSE, AS DIRECTED.

2. ALL WORK DETAILED ON THESE PLANS TO BE PERFORMED UNDER CONTRACT SHALL, EXCEPT AS OTHERWISE STATED OR PROVIDED OF HEREON, BE CONSTRUCTED IN ACCORDANCE WITH THE CITY OF ALBUQUERQUE STANDARD SPECIFICATIONS FOR PUBLIC WORKS CONSTRUCTION.

3. UTILITY LINES SHALL BE INSTALLED PRIOR TO PAVEMENT, CURB AND GUTTER, AND/OR SIDEWALK, AS APPLICABLE.

4. ROUGH GRADING OF SITE (±0.5') SHALL BE COMPLETED PRIOR TO INSTALLATION OF UTILITY LINES.

36" STORM DRAIN

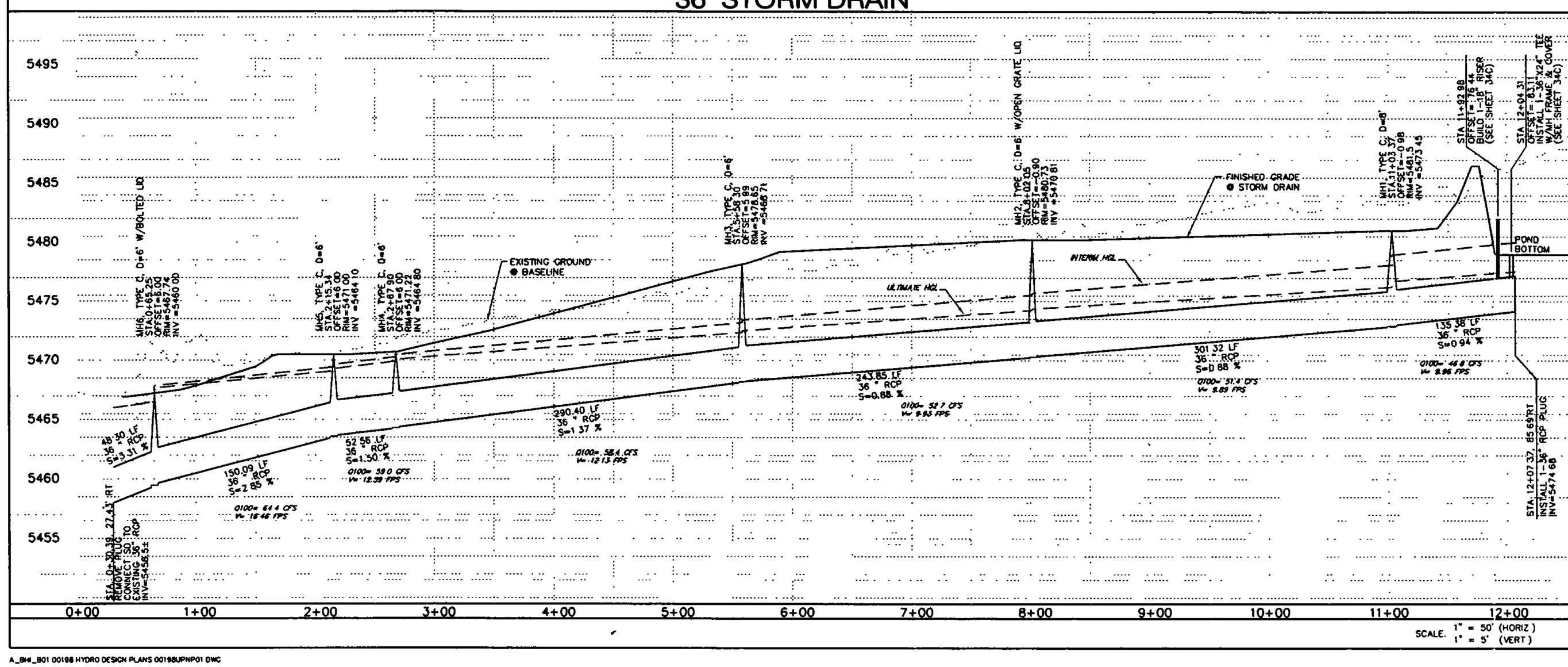

SCALE. 1" = 50' (HORIZ.)
1" = 5' (VERT.)

SURVEY INFORMATION			
FIELD NOTES			
NO.	BY	DATE	

BENCH MARKS	
To reach the station from the intersection of Central Ave and Eubank Blvd., go south on Eubank Blvd. 0.3 miles to Southern Ave., then east on Southern Ave. 0.4 miles to the Little League Baseball field and the station. The station mark is a standard ACS brass tablet, stamped 3-L21", set in top of a concrete post which is about 0.2 ft below ground surface at the southwest corner of a chainlink fence. Ground-to-Grid= 0.999864584 X=1559424.9480, Y=1480483.3968, ELEV.=5499.07 (Ground Coord.)	

AS-BUILT INFORMATION	
CONTRACTOR	DATE
STAKED BY	
INSPECTOR'S NOTES	DATE
FIELD VERIFICATION BY	
DATE	
DRAWINGS CORRECTED BY	DATE

MICRO-FILM INFORMATION	
RECORDED BY	DATE
NO	

ENGINEER'S SEAL

LYNN M. MAJOR NEW MEXICO 11797 REGISTERED PROFESSIONAL ENGINEER

No.	Date	REMARKS	By
		REVISIONS	
		DESIGN	

Designed By L.M.M. DATE: 04.03.00
Drawn By S.F.G. DATE: 04.03.00
Checked By L.M.M. DATE: 04.03.00

Bohannan ▲ Huston
Courtyard One 7500 JEFFERSON NE Albuquerque NEW MEXICO 87109
ENGINEERS PLANNERS PHOTOGRAMMETRISTS SURVEYORS SOFTWARE DEVELOPERS

CITY OF ALBUQUERQUE
PUBLIC WORKS DEPARTMENT
ENGINEERING DEVELOPMENT GROUP

COSTCO WHOLESALE
36" STORM DRAIN
PLAN & PROFILE

Design Review Committee	City Engineer Approval	Last Design Update	Mo./Day/Yr.	Mo./Day/Yr.

City Project No	Zone Map No	Sheet	Of
638281	L-21-Z	34A	74

A_BHI_801 00198 HYDRO DESIGN PLANS 00198UPNP01.DWG

BHI JOB NO 00198A7 05

Date 05 02 00

Copyright Bohannan Huston 2000

ATTACHMENT 1

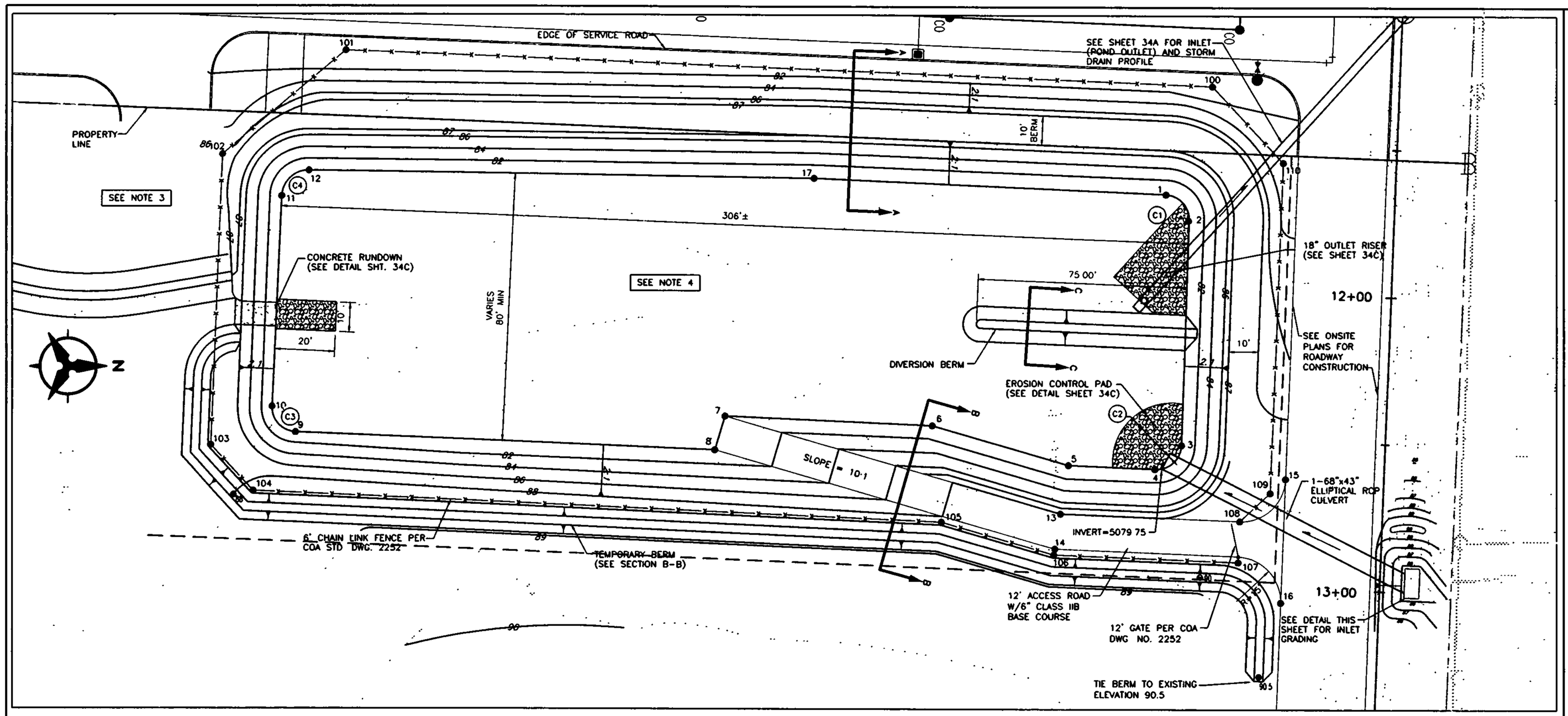

POND GRADING PLAN

SCALE. 1"=20'

NOTES

1. CONTRACTOR SHALL SCARIFY EXISTING GROUND 1' AND COMPACT BERM TO MAXIMUM DENSITY OF 95% ASTM 1550 AND OPTIMUM MOISTURE
2. FILL FOR DIVERSION BERMS AND TEMPORARY BERM SHALL BE COMPACTED TO MAXIMUM DENSITY OF 95% ASTM 1550 AND OPTIMUM MOISTURE.
3. COORDINATE GRADING IN THIS AREA WITH SITE GRADING
4. POND BOTTOM SHALL BE SEEDED PER SEEDING MIX IN COA STD SPEC 1012 4 1 2
5. GRAVEL MULCH SEEDING SHALL BE PER MIX IN COA STD SPEC. 1012 4 1 2 GRAVEL SHALL BE 3/4" TO 3" FRACTURED FACE GRAVEL (85%), COLOR SANTA ANA TAN

POINTS TABLE FOR POND BOTTOM			
POINT #	NORTHING	EASTING	ELEVATION
1	1,480,958 41	1,557,602 73	5479.55
2	1,480,965 87	1,557,611.52	5479.55
3	1,480,963 50	1,557,687 80	5479 75
4	1,480,954.66	1,557,695 95	5479.75
5	1,480,925.53	1,557,694 68	5479 70
6	1,480,879 58	1,557,681.24	5479 65
7	1,480,809.50	1,557,678.14	5480 00
8	1,480,806 13	1,557,689.66	5480 00
9	1,480,664 72	1,557,683.81	5480 30
10	1,480,656 86	1,557,675.09	5480.30
11	1,480,660 12	1,557,603 75	5480 00
12	1,480,669 24	1,557,595.11	5480.00
13	1,480,922 83	1,557,711 19	5488.00
14	1,480,920 88	1,557,723.12	5488.48
15	1,480,998 57	1,557,699 21	5488 00
16	1,480,996 88	1,557,741.18	5489 00
17	1,480,839 61	1,557,597 46	5479.70

POINTS TABLE FOR FENCE		
POINT #	NORTHING	EASTING
100	1480973.89	1557565 94
101	1480681.55	1557554.21
102	1480640.10	1557589.57
103	1480636.16	1557688 15
104	1480650.54	1557703 80
105	1480882.61	1557714 04
106	1480920.55	1557725.11
107	1480982.42	1557727.59
108	1480982.98	1557713.60
109	1480993.37	1557704 01
110	1480997.87	1557591 92

CURVE TABLE FOR POND BOTTOM				
CURVE	DELTA	RADIUS	TANGENT	LENGTH
C1	90°00'00"	8 00	8 00	12 57
C2	89°59'02"	8 50	8 50	13 35
C3	88°37'26"	8 40	8 20	13 00
C4	88°28'05"	9.00	8.76	13.90

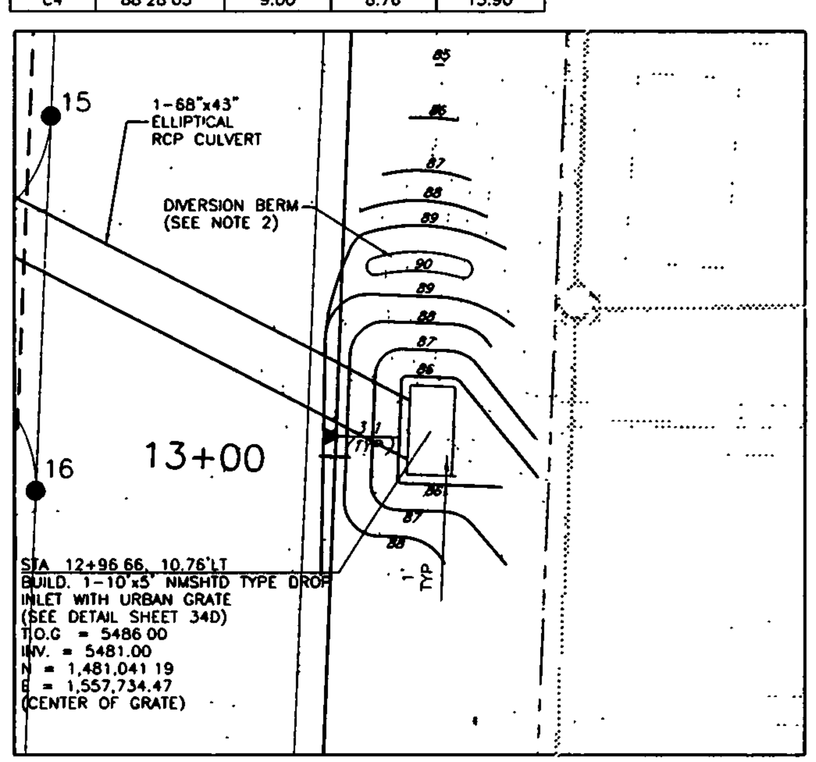

OFFSITE FLOW INLET DETAIL

SCALE 1"=10'

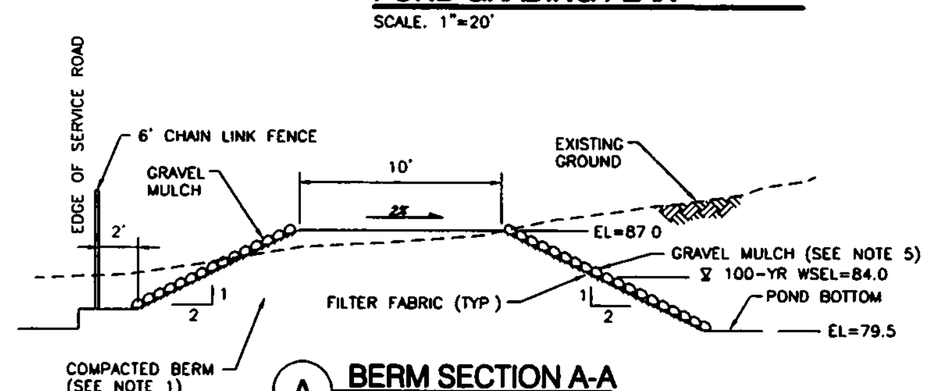

A BERM SECTION A-A

N T.S

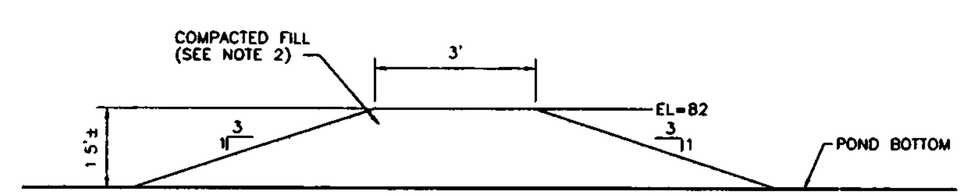

C DIVERSION BERM SECTION C-C

N T.S.

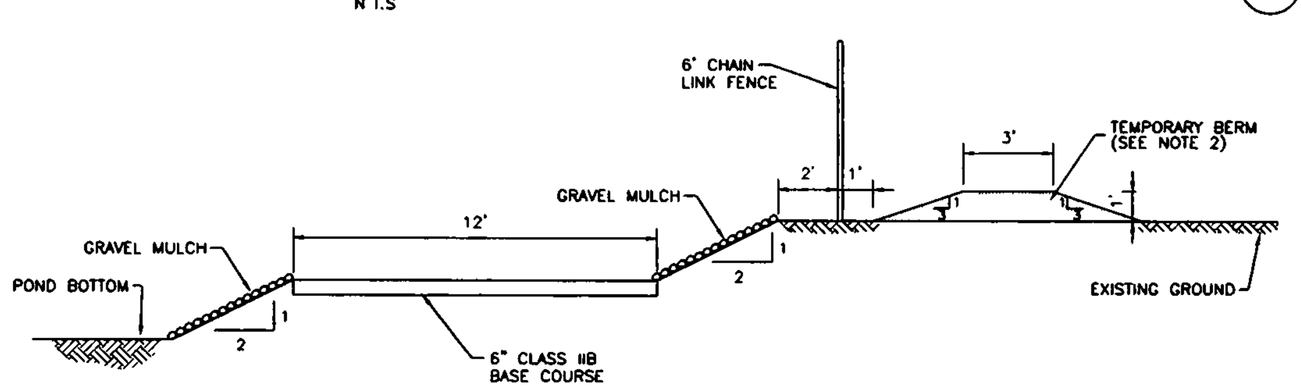

B ACCESS ROAD SECTION B-B

N T S

AS-BUILT INFORMATION

CONTRACTOR | DATE
WORK STAKED BY | DATE
INSPECTOR ACCEPTANCE BY | DATE
FIELD VERIFICATION BY | DATE
DRAWINGS CORRECTED BY | DATE

MICRO-FILM INFORMATION

RECORDED BY | DATE
NO

BENCH MARKS

To reach the station from the intersection of Central Ave and Eubank Blvd., go south on Eubank Blvd. 0.3 miles to Southern Ave., then east on Southern Ave 0 4 miles to the Little League Baseball field and the station The station mark is a standard ACS brass tablet, stamped "S-121", set in top of a concrete post which is about 0 2 ft. below ground surface at the southwest corner of a chainlink fence Ground-to-Grid= 0 999644584 X=1558424.8480, Y=1480485.3988, ELEV=5499.07 (Ground Coord.)

SURVEY INFORMATION

FIELD NOTES

NO.	BY	DATE

ENGINEER'S SEAL

LYNN M MAJOR NEW MEXICO 11797 REGISTERED PROFESSIONAL ENGINEER

No	Date	REMARKS	By
		REVISIONS	
		DESIGN	

Designed By L M M DATE. 04.03.00
Drawn By S F G. DATE 04 03.00
Checked By L M M DATE: 04 03.00

Bohannan ▲ Huston

Courtyard One 7500 JEFFERSON NE Albuquerque NEW MEXICO 87109

ENGINEERS PLANNERS PHOTOGRAMMETRISTS SURVEYORS SOFTWARE DEVELOPERS

CITY OF ALBUQUERQUE
PUBLIC WORKS DEPARTMENT
ENGINEERING DEVELOPMENT GROUP

COSTCO WHOLESALE
DETENTION POND

Design Review Committee	City Engineer Approval	Last Design Update	Mo /Day/Yr	Mo /Day/Yr

City Project No	Zone Map No	Sheet	Of
638281	L-21-Z	34B	74

A_BHI_B01 00198 HYDRO DESIGN PLANS 00198PLAN01 DWG

BHI JOB NO 00198A7 05

Date. 04 03 00

Copyright Bohannan Huston 2000

ATTACHMENT 1

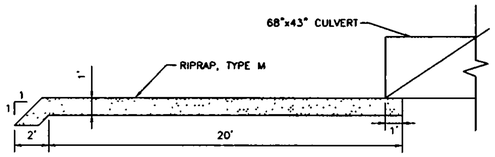

CULVERT EROSION CONTROL PAD
NTS

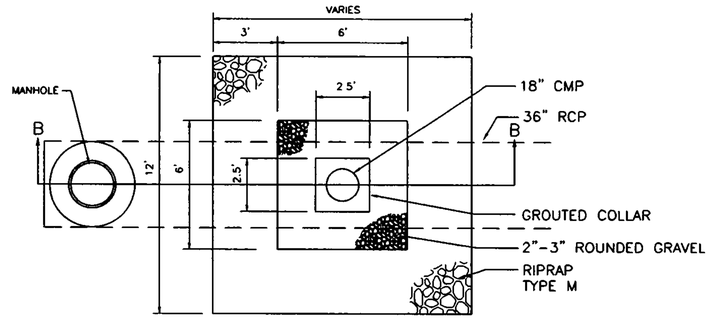

PLAN

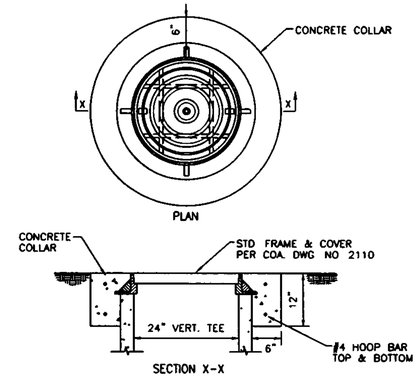

FRAME & COVER DETAIL
N.T.S

NOTE:
FRAME & COVER AND CONCRETE COLLAR SHALL BE INCIDENTAL TO TEE SECTION.

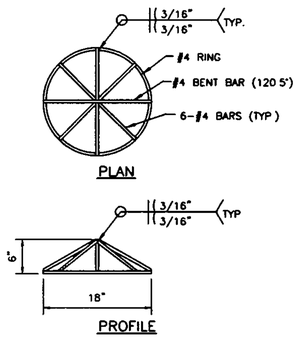

OUTLET RISER CAP DETAIL
N.T.S.

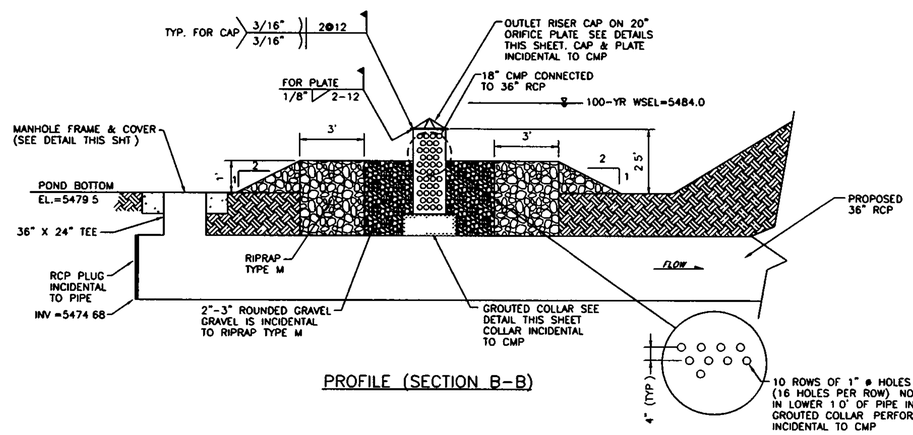

PROFILE (SECTION B-B)

OUTLET RISER DETAIL
N.T.S.

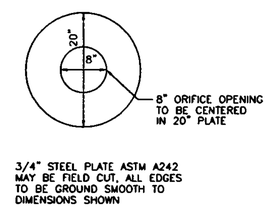

3/4" STEEL PLATE ASTM A242
MAY BE FIELD CUT, ALL EDGES
TO BE GROUND SMOOTH TO
DIMENSIONS SHOWN

ORIFICE PLATE DETAIL
N.T.S

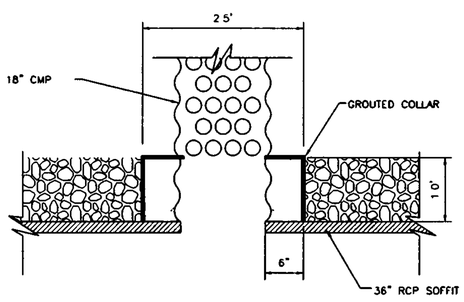

GROUTED COLLAR DETAIL
N.T.S.

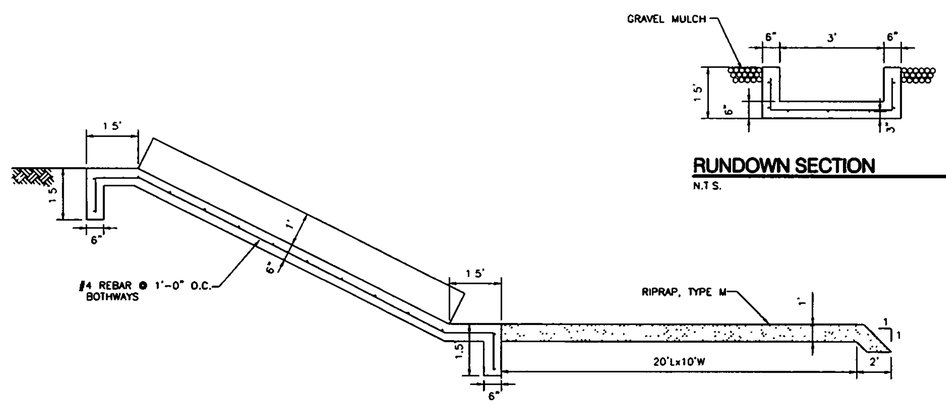

RUNDOWN SECTION
N.T.S.

RUNDOWN ELEVATION
NTS

NOTES

1. STRUCTURAL CAST-IN-PLACE CONCRETE SHALL BE 3500 PSI CHAMFER ALL EXPOSED EDGES OF CONCRETE 3/4".
2. ALL REINFORCING BARS SHALL CONFORM TO AASHTO SPECIFICATION M-31, GRADE 60
3. FIELD CUT AND BEND REINFORCING BARS AS REQUIRED FOR THE STRUCTURE

AS-BUILT INFORMATION

CONTRACTOR	DATE
REVIEWED BY INSPECTOR'S	DATE
REPRESENTATIVE BY FIELD	DATE
VERIFICATION BY ENGINEER	DATE
CORRECTED BY	DATE

MICRO-FILM INFORMATION

RECORDED BY	DATE
NO	

BENCH MARKS

To reach the station from the intersection of Central Ave and Eubank Blvd., go south on Eubank Blvd. 0.3 miles to Southern Ave.; then east on Southern Ave 0.4 miles to the Little League Baseball field and the station. The station mark is a standard ACS brass tablet, stamped "3-L21", set in top of a concrete post which is about 0.2 ft. below ground surface at the southwest corner of a chainlink fence. Ground-to-Grid= 0.999644584
X=1558424.9480, Y=1480485.3958, ELEV=5499.07 (Ground Coord.)

SURVEY INFORMATION

FIELD NOTES

NO.	BY	DATE

ENGINEER'S SEAL

LYNN M. MAZOR
NEW MEXICO
11797
REGISTERED PROFESSIONAL ENGINEER

No.	Date	REMARKS	By
		REVISIONS	
		DESIGN	

Designed By L.M.M. DATE 04.03.00
Drawn By S.F.G. DATE: 04.03.00
Checked By L.M.M. DATE 04.03.00

Bohannan ▲ Huston
Courtyard One 7500 JEFFERSON NE Albuquerque NEW MEXICO 87109
ENGINEERS PLANNERS PHOTOGRAMMETRISTS SURVEYORS SOFTWARE DEVELOPERS

CITY OF ALBUQUERQUE
PUBLIC WORKS DEPARTMENT
ENGINEERING DEVELOPMENT GROUP

COSTCO WHOLESALE
POND DETAILS

Design Review Committee	City Engineer Approval	Last Design Update	Mo./Day/Yr.	Mo./Day/Yr.

City Project No	Zone Map No	Sheet	Of
638281	L-21-Z	34C	74

A_BHI_B01 00198 HYDRO DESIGN PLANS 00198MD01 DWG

ATTACHMENT 1

BHI JOB NO 00198A7 05

Date 05 02 00
Copyright Bohannan Huston 2000

COSTCO DETENTION POND
DETENTION POND VOLUME

AVG. BOTTOM WIDTH = 90
AVG. BOTTOM LENGTH = 300

ELEV. (FT)	AREA (AC)	VOLUME (AC-FT)
0.00	0.62	0.00
0.33	0.63	0.21
0.66	0.64	0.42
0.99	0.66	0.63
1.32	0.67	0.85
1.65	0.68	1.07
1.98	0.69	1.30
2.31	0.70	1.53
2.47	0.71	1.64
2.97	0.73	2.00
3.50	0.75	2.39
4.00	0.77	2.77
4.50	0.79	3.16
5.00	0.81	3.56
5.50	0.83	3.97
6.00	0.85	4.39
7.00	0.89	5.26

Avg. bottom elevation = 5479.88 ft.
100-Year WSEL from AHYMO = 4.32 ft.

Avg. water surface elevation in pond = 5484.2 ft.

ATTACHMENT 2

```
AHYMO SUMMARY TABLE (AHYMO194) - AMAFCA Hydrologic Model - January, 1994          RUN DATE (MON/DAY/YR) =06/29/2000
INPUT FILE = INTERIM.HYM                                                                  USER NO.= BOHN_HNM.STE

                              FROM  TO                    PEAK        RUNOFF                TIME TO    CFS      PAGE =   1
                HYDROGRAPH    ID    ID        AREA     DISCHARGE     VOLUME      RUNOFF     PEAK      PER
COMMAND       IDENTIFICATION  NO.   NO.      (SQ MI)     (CFS)       (AC-FT)    (INCHES)   (HOURS)   ACRE     NOTATION

START                                                                                                      TIME=       .00
*S*    ANALYSIS OF DETENTION POND EAST OF COSTCO SITE, EUBANK AND SOUTHERN.
*S*    THIS FILE MODELS INTERIM CONDITIONS WITH POND FROM GRADING PLAN.
*S*    100 YEAR, 24 HOUR STORM
*S*
*S*
*S*    RAINFALL AND DRAINAGE BASINS FROM "SOUTH EUBANK AREA STORM DRAIN
*S*    ANALYSIS", SMITH ENGINEERING CO., NOV. 1995
*S*    BASINS TO POND IN INTERIM CONDITIONS:  405B, 401, PORTION OF 404
*S*    USE LAND TREATMENT FACTORS FROM BHI CONCEPTUAL GRADING & DRNG PLAN.
RAINFALL  TYPE= 2                                                                                          RAIN24=   3.170
*S*    1-HOUR = 2.07
*S*    6-HOUR = 2.56
*S*   24-HOUR = 3.17
*S*
*S*** COMPUTE HYD FOR BASIN 401 EAST OF ELIZABETH
COMPUTE NM HYD        401.10   -     1        .03380        73.05       4.931      2.73533    1.600    3.377 PER IMP=  90.00
*S*** ROUTE THROUGH BASIN 405B TO DETENTION POND INLET
ROUTE                401.1OR    1   11        .03380        76.30       4.931      2.73534    1.650    3.527
*S*** COMPUTE HYD FOR BASIN 405B WEST OF ELIZABETH
COMPUTE NM HYD        405.00   -     2        .02660        73.82       3.881      2.73533    1.500    4.336 PER IMP=  90.00
*S*** ADD BASIN 405B FLOW TO ROUTED FLOW
ADD HYD               405.AP 11& 2  12        .06040       127.75       8.811      2.73532    1.600    3.305
*S*** COMPUTE HYD FOR PORTION OF BASIN 404 EAST OF POND, TRACT 2 = 15 AC.
COMPUTE NM HYD          2.00   -     3        .02340        31.53       1.093       .87562    1.550    2.105 PER IMP=    .00
*S*** ADD TRACT 2 FLOW TO TOTAL FLOW AT POND
ADD HYD               TR2.AP  3&12  13        .08380       157.00       9.904      2.21602    1.600    2.927
*S*** COMPUTE HYD FOR DETENTION POND AREA
COMPUTE NM HYD          8.10   -     8        .00140         2.48        .074       .99001    1.500    2.771 PER IMP=   1.00
*S*** ADD POND AREA FOR TOTAL FLOW TO DETENTION POND
ADD HYD               TR2.AP 13& 8  13        .08520       158.87       9.978      2.19576    1.600    2.914
*S*  ROUTE TOTAL FLOW THROUGH POND WITH 18" RISER PIPE W/ORIFICE PLATE & 36" OUT
ROUTE RESERVOIR       TR2.RR   13   16        .08520        55.21       9.956      2.19110    2.050    1.012 AC-FT=    4.384
*S*** COMPUTE HYD FOR BASIN 1-C
COMPUTE NM HYD          1.00   -     1        .00200         5.89        .292      2.73533    1.500    4.603 PER IMP=  90.00
*S*** COMPUTE HYD FOR BASIN 1-G
COMPUTE NM HYD          1.00   -     2        .00270         8.26        .421      2.92382    1.500    4.781 PER IMP= 100.00
*S*** ADD BASINS 1-C AND 1-G
ADD HYD                 ADD1  1& 2   1        .00470        14.15        .713      2.84350    1.500    4.705
*S*** ADD TO POND DISCHARGE FOR TOTAL AT AP1
ADD HYD                  AP1  1&16   3        .08990        58.67      10.669      2.22521    2.000    1.020
*S*** ROUTE TO AP2 THROUGH PROPOSED STORM DRAIN
ROUTE                 AP1.SR    3   13        .08990        58.68      10.669      2.22513    2.000    1.020
*S*** COMPUTE HYD FOR BASIN 1-D
COMPUTE NM HYD          1.00   -     1        .00130         3.84        .190      2.73533    1.500    4.611 PER IMP=  90.00
*S*** ADD TO TOTAL PIPE FLOW AT AP2
ADD HYD                  AP2  1&13   3        .09120        59.60      10.858      2.23240    2.000    1.021
*S*** ROUTE TO AP3 THROUGH PROPOSED STORM DRAIN
ROUTE                 AP2.SR    3   13        .09120        59.60      10.858      2.23237    2.000    1.021
*S*** COMPUTE HYD FOR BASIN 1-B
```

ATTACHMENT 3a

COMMAND	HYDROGRAPH IDENTIFICATION	FROM ID NO.	TO ID NO.	AREA (SQ MI)	PEAK DISCHARGE (CFS)	RUNOFF VOLUME (AC-FT)	RUNOFF (INCHES)	TIME TO PEAK (HOURS)	CFS PER ACRE	NOTATION
COMPUTE NM HYD	1.00	-	8	.00270	7.62	.367	2.54685	1.500	4.411	PER IMP= 80.00
*S*** COMPUTE HYD FOR BASIN 1-F										
COMPUTE NM HYD	1.00	-	2	.00310	9.48	.483	2.92382	1.500	4.780	PER IMP= 100.00
*S*** ADD BASINS 1-B AND 1-F										
ADD HYD	1BF.ADD	8& 2	2	.00580	17.11	.850	2.74823	1.500	4.608	
*S*** ADD TO TOTAL PIPE FLOW AT AP3										
ADD HYD	AP3	13& 2	3	.09700	63.84	11.708	2.26322	1.950	1.028	
*S*** ROUTE TO AP4 THROUGH PROPOSED STORM DRAIN										
ROUTE	AP3.SR	3	13	.09700	63.83	11.708	2.26317	1.950	1.028	
*S*** COMPUTE HYD FOR BASIN 1-E										
COMPUTE NM HYD	1.00	-	1	.00530	15.58	.773	2.73533	1.500	4.593	PER IMP= 90.00
*S*** ADD TO TOTAL PIPE FLOW AT AP4										
ADD HYD	AP4	1&13	3	.10230	67.93	12.481	2.28762	1.950	1.038	
*S*** ROUTE TO AP5 (EUBANK STORM DRAIN) THROUGH PROPOSED STORM DRAIN										
ROUTE	AP4.SR	3	13	.10230	67.94	12.481	2.28761	1.950	1.038	
*S*** COMPUTE HYD FOR BASIN 1-A										
COMPUTE NM HYD	1.00	-	1	.00800	22.55	1.087	2.54685	1.500	4.404	PER IMP= 80.00
*S*** ADD TO TOTAL PIPE FLOW AT AP5 (MANHOLE AT BELL AVE)										
ADD HYD	AP4	1&13	3	.11030	76.28	13.568	2.30642	1.500	1.081	
*S*** COMPUTE HYD FOR BASIN 506 - SOUTHERN BLVD. BASIN										
COMPUTE NM HYD	6.10	-	6	.01250	26.13	1.589	2.38405	1.550	3.266	PER IMP= 75.00
*S*** ADD TO TOTAL PIPE FLOW AT AP5										
ADD HYD	AP4	3& 6	3	.12280	98.57	15.157	2.31431	1.500	1.254	
FINISH										

ATTACHMENT 3a

```
 AHYMO SUMMARY TABLE (AHYMO194) - AMAFCA Hydrologic Model - January, 1994          RUN DATE (MON/DAY/YR) =04/28/2000
INPUT FILE = ULTIMATE.HYM                                                                  USER NO.= BOHN_HNM.STE

                              FROM  TO                    PEAK        RUNOFF                TIME TO    CFS      PAGE =   1
                  HYDROGRAPH   ID   ID        AREA     DISCHARGE     VOLUME      RUNOFF      PEAK     PER
COMMAND        IDENTIFICATION  NO.  NO.     (SQ MI)      (CFS)       (AC-FT)    (INCHES)   (HOURS)   ACRE     NOTATION

START                                                                                                      TIME=       .00
*S*    ANALYSIS OF DETENTION POND EAST OF COSTCO SITE, EUBANK AND SOUTHERN.
*S*    THIS FILE MODELS ULTIMATE CONDITIONS POND ON GRADING PLAN WITH 2% BULKING
*S*    100 YEAR, 24 HOUR STORM
*S*
*S*
*S*    RAINFALL AND DRAINAGE BASINS FROM "SOUTH EUBANK AREA STORM DRAIN
*S*    ANALYSIS", SMITH ENGINEERING CO., NOV. 1995
*S*    BASINS TO POND FOR ULTIMATE CONDITIONS:  405B AND PORTION OF 404
*S*    USE LAND TREATENT FACTORS FROM BHI CONCEPTUAL GRADING & DRNG PLAN.
RAINFALL  TYPE= 2                                                                                          RAIN24=   3.170
*S*    1-HOUR = 2.07
*S*    6-HOUR = 2.56
*S*   24-HOUR = 3.17
*S*
*S*    USE 2% BULKING FACTOR
SEDIMENT BULK                                                                                              PK BF =    1.02
*S*** COMPUTE HYD FOR BASIN 405B WEST OF ELIZABETH
COMPUTE NM HYD        405.00   -     2        .02660        75.30       3.958      2.79004    1.500    4.423 PER IMP=  90.00
*S*** COMPUTE HYD FOR PORTION OF BASIN 404 EAST OF POND, TRACT 2 = 15 AC.
COMPUTE NM HYD          2.00   -     3        .02340        56.98       3.002      2.40553    1.550    3.805 PER IMP=  70.00
*S*** ADD TRACT 2 FLOW AND BASIN 405B
ADD HYD               TR2.AP  3& 2  13        .05000       130.47       6.960      2.61007    1.500    4.077
*S*** COMPUTE HYD FOR DETENTION POND AREA
COMPUTE NM HYD          8.10   -     8        .00140         2.53        .075      1.00981    1.500    2.827 PER IMP=   1.00
*S*** ADD POND AREA FOR TOTAL FLOW TO DETENTION POND
ADD HYD               TR2.AP 13& 8  13        .05140       133.00       7.035      2.56628    1.500    4.043
*S*  ROUTE TOTAL FLOW THROUGH POND WITH 18" RISER PIPE & 36" OUTFALL
ROUTE RESERVOIR       TR2.RR   13   16        .05140        46.76       7.022      2.56146    1.850    1.422 AC-FT=    3.020
*S*** COMPUTE HYD FOR BASIN 1-C
COMPUTE NM HYD          1.00   -     1        .00200         6.01        .298      2.79004    1.500    4.695 PER IMP=  90.00
*S*** COMPUTE HYD FOR BASIN 1-G
COMPUTE NM HYD          1.00   -     2        .00270         8.43        .429      2.98229    1.500    4.877 PER IMP= 100.00
*S*** ADD BASINS 1-C AND 1-G
ADD HYD                 ADD1  1& 2   1        .00470        14.44        .727      2.90037    1.500    4.799
*S*** ADD TO POND DISCHARGE FOR TOTAL AT MH1
ADD HYD                  AP1  1&16   3        .05610        51.43       7.749      2.58985    1.850    1.432
*S*** ROUTE TO MH2 THROUGH PROPOSED STORM DRAIN
ROUTE                 AP1.SR    3   13        .05610        51.44       7.749      2.58980    1.850    1.433
*S*** COMPUTE HYD FOR BASIN 1-D
COMPUTE NM HYD          1.00   -     1        .00130         3.91        .193      2.79004    1.500    4.703 PER IMP=  90.00
*S*** ADD TO TOTAL PIPE FLOW AT MH2
ADD HYD                  AP2  1&13   3        .05740        52.69       7.942      2.59433    1.850    1.434
*S*** ROUTE TO MH3 THROUGH PROPOSED STORM DRAIN
ROUTE                 AP2.SR    3   13        .05740        52.70       7.942      2.59428    1.850    1.435
*S*** COMPUTE HYD FOR BASIN 1-B
COMPUTE NM HYD          1.00   -     8        .00270         7.77        .374      2.59778    1.500    4.499 PER IMP=  80.00
*S*** COMPUTE HYD FOR BASIN 1-F
COMPUTE NM HYD          1.00   -     2        .00310         9.67        .493      2.98229    1.500    4.876 PER IMP= 100.00
```

ATTACHMENT 3b

COMMAND	HYDROGRAPH IDENTIFICATION	FROM ID NO.	TO ID NO.	AREA (SQ MI)	PEAK DISCHARGE (CFS)	RUNOFF VOLUME (AC-FT)	RUNOFF (INCHES)	TIME TO PEAK (HOURS)	CFS PER ACRE	NOTATION
*S*** ADD BASINS 1-B AND 1-F										
ADD HYD	1BF.ADD	8& 2	2	.00580	17.45	.867	2.80320	1.500	4.701	
*S*** ADD TO TOTAL PIPE FLOW AT MH3										
ADD HYD	AP3	13& 2	3	.06320	58.44	8.809	2.61346	1.800	1.445	
*S*** ROUTE TO MH5 THROUGH PROPOSED STORM DRAIN										
ROUTE	AP3.SR	3	13	.06320	58.40	8.809	2.61341	1.800	1.444	
*S*** COMPUTE HYD FOR BASIN 1-E										
COMPUTE NM HYD	1.00	-	1	.00530	15.89	.789	2.79004	1.500	4.685	PER IMP= 90.00
*S*** ADD TO TOTAL PIPE FLOW AT MH5										
ADD HYD	AP4	1&13	3	.06850	64.02	9.598	2.62707	1.800	1.460	
*S*** ROUTE TO EUBANK STORM DRAIN										
ROUTE	AP4.SR	3	13	.06850	64.00	9.597	2.62705	1.800	1.460	
*S*** COMPUTE HYD FOR BASIN 1-A										
COMPUTE NM HYD	1.00	-	1	.00800	23.00	1.108	2.59778	1.500	4.492	PER IMP= 80.00
*S*** ADD TO TOTAL EUBANK SD FLOW AT BELL AVE										
ADD HYD	AP4	1&13	3	.07650	78.14	10.706	2.62398	1.500	1.596	
*S*** COMPUTE HYD FOR BASIN 506 - SOUTHERN BLVD. BASIN										
COMPUTE NM HYD	6.10	-	6	.01250	26.65	1.621	2.43173	1.550	3.331	PER IMP= 75.00
*S*** ADD TO TOTAL EUBANK SD FLOW										
ADD HYD	AP4	3& 6	3	.08900	101.84	12.327	2.59698	1.550	1.788	
FINISH										

ATTACHMENT 3b

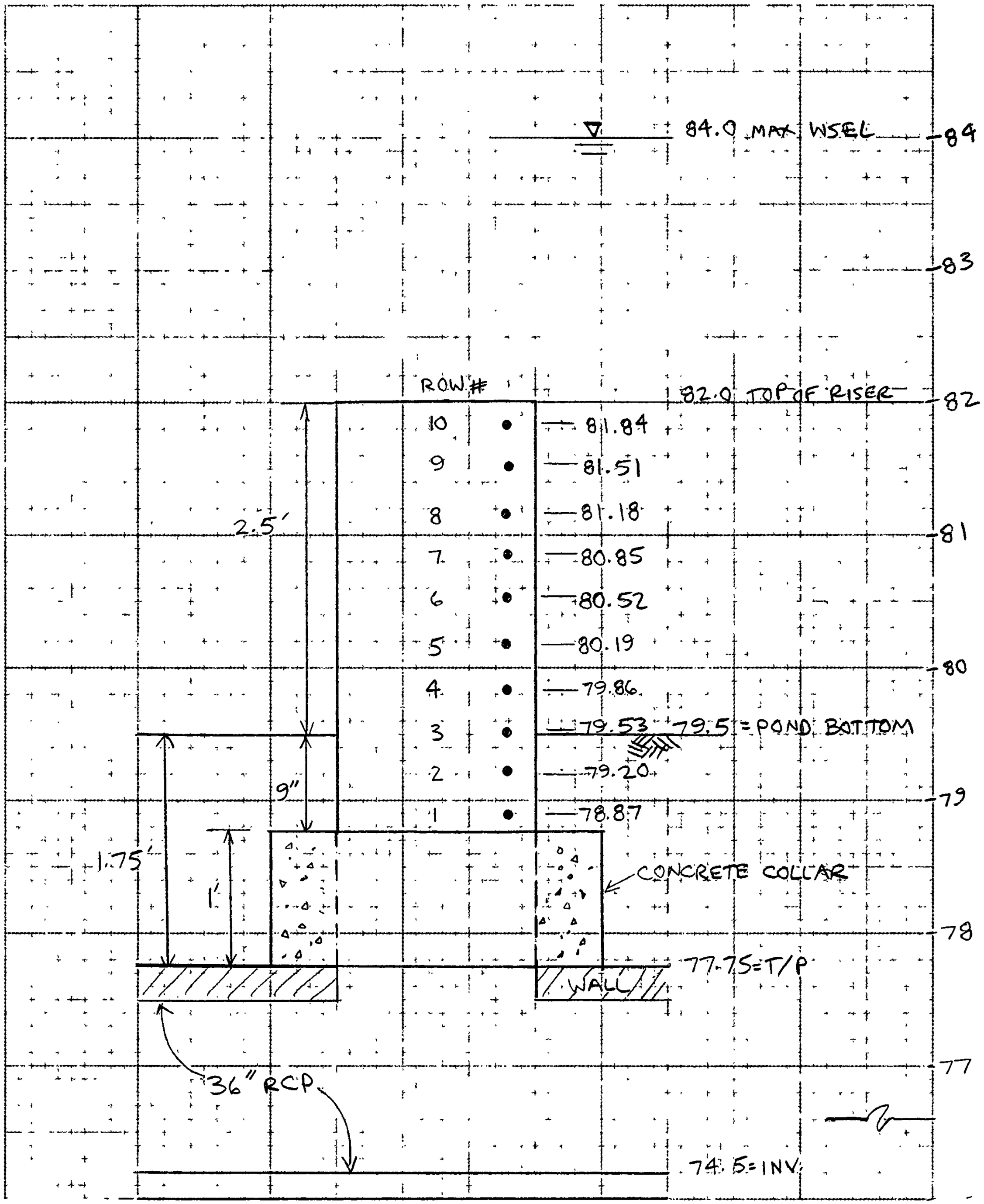

Bohannan Huston

PROJECT NAME Costco Wholesale SHEET 1 OF 1

PROJECT NO. 00198A7 05 BY LMM DATE 4-25-00

SUBJECT Riser Pipe CH'D DATE

ENGINEERS PLANNERS PHOTOGRAMMETRISTS SURVEYORS SOFTWARE DEVELOPERS

ATTACHMENT 4

COSTCO WHOLESALE DETENTION POND - INTERIM CONDITIONS
18-INCH PORTED CMP RISER TOWER DESIGN WITH ORIFICE PLATE ON TOP

DESIGN PARAMETERS
Peak Discharge Rate at 100 year water surface = 38 cfs
Outlet Works to be ported riser tower
Riser tower invert = 5479 5
100-year water surface elevation = 5484
Top of Pond = 5487
Outflow from Orifice Equation = $CA(2gh)^{1/2} = 0\ 61 \times 0\ 09 \times (2 \times 32\ 2 \times h)^{1/2} = 0\ 441\ h^{1/2}$

18-INCH PORTED CMP RISER WITH TOP OPENING & 1-INCH HOLES @ 4-INCH SPACING

	WATER ELEV (ft)	OPENING ROW NO	NO OF OPEN	OPENING DIAMETER (in)	OPENING AREA (sf)	ROW #1 OPENING HEAD (ft)	ROW #2 OPENING HEAD (ft)	ROW #3 OPENING HEAD (ft)	ROW #4 OPENING HEAD (ft)	ROW #5 OPENING HEAD (ft)	ROW #6 OPENING HEAD (ft)	ROW #7 OPENING HEAD (ft)	ROW #8 OPENING HEAD (ft)	ROW #9 OPENING HEAD (ft)	ROW #10 OPENING HEAD (ft)	CUM PORT FLOW RATE (cfs)	TOWER TOP OPENING WEIR LENGTH (ft)	WEIR HEAD (ft)	WEIR FLOW RATE (cfs)	TOTAL FLOW RATE (cfs)	WATER ELEV (cfs)
	5478 87	1	16	1	0 09	0 00	0 00	0 00	0 00	0 00	0 00	0 00	0 00	0 00	0 00	0					0 00
	5479 20	2	16	1	0 09	0 33	0 00	0 00	0 00	0 00	0 00	0 00	0 00	0 00	0 00	0 25					0 00
POND INVERT	5479 53	3	16	1	0 09	0 66	0 33	0 00	0 00	0 00	0 00	0 00	0 00	0 00	0 00	0 61			0 00	0 61	0 00
	5479 86	4	16	1	0 09	0 99	0 66	0 33	0 00	0 00	0 00	0 00	0 00	0 00	0 00	1 05			0 00	1 05	0 33
	5480 19	5	16	1	0 09	1 32	0 99	0 66	0 33	0 00	0 00	0 00	0 00	0 00	0 00	1 56			0 00	1 56	0 66
	5480 52	6	16	1	0 09	1 65	1 32	0 99	0 66	0 33	0 00	0 00	0 00	0 00	0 00	1 87			0 00	1 87	0 99
	5480 85	7	16	1	0 09	1 98	1 65	1 32	0 99	0 66	0 33	0 00	0 00	0 00	0 00	2 74			0 00	2 74	1 32
	5481 18	8	16	1	0 09	2 31	1 98	1 65	1 32	0 99	0 66	0 33	0 00	0 00	0 00	3 41			0 00	3 41	1 65
	5481 51	9	16	1	0 09	2 64	2 31	1 98	1 65	1 32	0 99	0 66	0 33	0 00	0 00	3 88			0 00	3 88	1 98
	5481 84	10	16	1	0 09	2 97	2 64	2 31	1 98	1 65	1 32	0 99	0 66	0 33	0 00	4 89			0 00	4 89	2 31
TOP OF RISER	5482 00					3 13	2 80	2 47	2 14	1 81	1 48	1 15	0 82	0 49	0 16	5 34			0 00	5 34	2 47
	5482 50					3 63	3 30	2 97	2 64	2 31	1 98	1 65	1 32	0 99	0 66	6 28	2 09	0 5	2 45	8 73	2 97
	5483 00					4 13	3 80	3 47	3 14	2 81	2 48	2 15	1 82	1 49	1 16	7 05		1	6 93	13 98	3 47
	5483 50					4 63	4 30	3 97	3 64	3 31	2 98	2 65	2 32	1 99	1 66	7 73		1 5	12 74	20 46	3 97
100-YR WSEL	5484 00					5 13	4 80	4 47	4 14	3 81	3 48	3 15	2 82	2 49	2 16	8 35		2	19 61	27 95	4 47
	5484 50					5 63	5 30	4 97	4 64	4 31	3 98	3 65	3 32	2 99	2 66	8 92		2 5	27 40	36 32	4 97
	5485 00					6 13	5 80	5 47	5 14	4 81	4 48	4 15	3 82	3 49	3 16	9 45		3	36 02	45 48	5 47
	5485 50					6 63	6 30	5 97	5 64	5 31	4 98	4 65	4 32	3 99	3 66	9 96		3 5	45 39	55 35	5 97
	5486 00					7 13	6 80	6 47	6 14	5 81	5 48	5 15	4 82	4 49	4 16	10 44		4	55 46	65 90	6 47
TOP OF BERM	5487 00					8 13	7 80	7 47	7 14	6 81	6 48	6 15	5 82	5 49	5 16	11 34		5	77 51	88 85	7 47

ATTACHMENT 4a

COSTCO WHOLESALE DETENTION POND
18-INCH PORTED CMP RISER TOWER DESIGN

DESIGN PARAMETERS
Peak Discharge Rate at 100 year water surface = 38 cfs
Outlet Works to be ported riser tower
Riser tower invert = 5479 5
100-year water surface elevation = 5484
Top of Pond = 5487
Outflow from Orifice Equation = $CA(2gh)^{1/2} = 0\ 61 \times 0\ 09 \times (2 \times 32\ 2 \times h)^{1/2} = 0\ 441\ h^{1/2}$

18-INCH PORTED CMP RISER WITH TOP OPENING & 1-INCH HOLES @ 4-INCH SPACING

																	TOWER				
																CUM	TOP				
		OPENING	NO			ROW #1	ROW #2	ROW #3	ROW #4	ROW #5	ROW #6	ROW #7	ROW #8	ROW #9	ROW #10	PORT	OPENING		WEIR	TOTAL	
	WATER	ROW	OF	OPENING	OPENING	OPENING	OPENING	OPENING	OPENING	OPENING	OPENING	OPENING	OPENING	OPENING	OPENING	FLOW	WEIR	WEIR	FLOW	FLOW	WATER
	ELEV	NO	OPEN	DIAMETER	AREA	HEAD	HEAD	HEAD	HEAD	HEAD	HEAD	HEAD	HEAD	HEAD	HEAD	RATE	LENGTH	HEAD	RATE	RATE	ELEV
	(ft)			(in)	(sf)	(ft)	(ft)	(ft)	(ft)	(ft)	(ft)	(ft)	(ft)	(ft)	(ft)	(cfs)	(ft)	(ft)	(cfs)	(cfs)	(cfs)
	5478 87	1	16	1	0 09	0 00	0 00	0 00	0 00	0 00	0 00	0 00	0 00	0 00	0 00	0					0 00
	5479 20	2	16	1	0 09	0 33	0 00	0 00	0 00	0 00	0 00	0 00	0 00	0 00	0 00	0 25					0 00
POND INVERT	5479 53	3	16	1	0 09	0 66	0 33	0 00	0 00	0 00	0 00	0 00	0 00	0 00	0 00	0 61			0 00	0 61	0 00
	5479 86	4	16	1	0 09	0 99	0 66	0 33	0 00	0 00	0 00	0 00	0 00	0 00	0 00	1 05			0 00	1 05	0 33
	5480 19	5	16	1	0 09	1 32	0 99	0 66	0 33	0 00	0 00	0 00	0 00	0 00	0 00	1 56			0 00	1 56	0 66
	5480 52	6	16	1	0 09	1 65	1 32	0 99	0 66	0 33	0 00	0 00	0 00	0 00	0 00	1 87			0 00	1 87	0 99
	5480 85	7	16	1	0 09	1 98	1 65	1 32	0 99	0 66	0 33	0 00	0 00	0 00	0 00	2 74			0 00	2 74	1 32
	5481 18	8	16	1	0 09	2 31	1 98	1 65	1 32	0 99	0 66	0 33	0 00	0 00	0 00	3 41			0 00	3 41	1 65
	5481 51	9	16	1	0 09	2 64	2 31	1 98	1 65	1 32	0 99	0 66	0 33	0 00	0 00	3 88			0 00	3 88	1 98
	5481 84	10	16	1	0 09	2 97	2 64	2 31	1 98	1 65	1 32	0 99	0 66	0 33	0 00	4 89			0 00	4 89	2 31
TOP OF RISER	5482 00					3 13	2 80	2 47	2 14	1 81	1 48	1 15	0 82	0 49	0 16	5 34			0 00	5 34	2 47
	5482 50					3 63	3 30	2 97	2 64	2 31	1 98	1 65	1 32	0 99	0 66	6 28	4 71	0 5	5 52	11 80	2 97
	5483 00					4 13	3 80	3 47	3 14	2 81	2 48	2 15	1 82	1 49	1 16	7 05		1	15 62	22 67	3 47
	5483 50					4 63	4 30	3 97	3 64	3 31	2 98	2 65	2 32	1 99	1 66	7 73		1 5	28 70	36 43	3 97
100-YR WSEL	5484 00					5 13	4 80	4 47	4 14	3 81	3 48	3 15	2 82	2 49	2 16	8 35		2	44 19	52 53	4 47
	5484 50					5 63	5 30	4 97	4 64	4 31	3 98	3 65	3 32	2 99	2 66	8 92		2 5	61 76	70 67	4 97
	5485 00					6 13	5 80	5 47	5 14	4 81	4 48	4 15	3 82	3 49	3 16	9 45		3	81 18	90 63	5 47
	5485 50					6 63	6 30	5 97	5 64	5 31	4 98	4 65	4 32	3 99	3 66	9 96		3 5	102 30	112 26	5 97
	5486 00					7 13	6 80	6 47	6 14	5 81	5 48	5 15	4 82	4 49	4 16	10 44		4	124 98	135 42	6 47
TOP OF BERM	5487 00					8 13	7 80	7 47	7 14	6 81	6 48	6 15	5 82	5 49	5 16	11 34		5	174 67	186 01	7 47

ATTACHMENT 4b

COSTCO WHOLESALE DETENTION POND OUTFLOW

Outflow from Riser Pipe vs. Inlet Control on 36" Pipe
See spreadsheet "Riser.xls" for Riser Pipe Outflow
36" pipe outflow from FHWA Inlet Control Nomograph

Head (ft)	Riser Pipe Outflow (cfs)	36" Pipe Outflow (cfs)	Control Q (cfs)
0.33	1.05	2.00	1.05
0.66	1.56	5.50	1.56
0.99	1.87	7.50	1.87
1.32	2.74	10.00	2.74
1.65	3.41	12.00	3.41
1.98	3.88	19.50	3.88
2.31	4.89	25.00	4.89
2.47	5.34	28.00	5.34
2.97	11.80	35.00	11.80
3.50	22.67	40.00	22.67
4.00	36.43	50.00	36.43
4.50	52.53	53.00	52.53
5.00	70.67	60.00	60.00
5.50	90.63	68.00	68.00
6.00	112.26	70.00	70.00
7.00	186.01	78.00	78.00

ATTACHMENT 5

COSTCO WHOLESALE OFFSITE STORM DRAIN - INTERIM CONDITIONS

==========

Storm & Sanitary SelectCAD Hydraulic Grade Line Calculations

Drainage File: P:\00198\Hydro\design\Control\00198.sdb

Design File: P:\00198\HYDRO\DESIGN\DRAWING\WORKAREA\00198LYNN.DWG

Display Log: P:\00198\HYDRO\DESIGN\DRAWING\WORKAREA\int_hgl.log

Date: Thursday, June 29, 2000 11:27:14

==========

where come from?

HGL/EGL Computations:

Table A:

Struct ID	D (in)	Q (cfs)	L (ft)	V (ft/s)	d (ft)	dc (ft)	$V^2/2g$ (ft)	Sf (ft/ft)	Dnstrm Soffit (ft)	EGLdn (ft)	HGLdn (ft)	Tot Loss (ft)	EGLup (ft)	HGLup (ft)	Rim Elev. (ft)
Outfall	-	-	-	-	-	-	-	-	-	-	-	-	-	5466.50	-
P8	36	67.90	48.32	9.61	-	-	1.43	0.0105	5461.50	5467.93	5466.50	0.51	5468.44	5467.01	-
MH6	-	-	-	-	-	-	-	-	-	5468.44	5467.01	1.36	5469.80	5468.36	5472.61
P6	36	67.90	150.15	9.61	-	-	1.43	0.0105	5463.00	5469.80	5468.36	1.58	5471.38	5469.94	-
MH5	-	-	-	-	-	-	-	-	-	5471.38	5469.94	0.21	5471.59	5470.16	5471.09
P5	36	64.40	52.57	9.11	-	-	1.29	0.0095	5467.10	5471.59	5470.16	0.50	5472.09	5470.80	-
MH4	-	-	-	-	-	-	-	-	-	5472.09	5470.80	0.20	5472.28	5470.99	5472.21
P4	36	63.80	290.43	9.03	-	-	1.27	0.0093	5467.80	5472.28	5470.99	2.69	5474.98	5473.71	-
MH3	-	-	-	-	-	-	-	-	-	5474.98	5473.71	0.20	5475.18	5473.91	5476.71
P3	36	59.60	243.86	8.43	-	-	1.10	0.0081	5471.71	5475.18	5473.91	1.97	5477.15	5476.05	-
MH2	-	-	-	-	-	-	-	-	-	5477.15	5476.05	0.16	5477.31	5476.21	5482.11
P2	36	58.70	301.33	8.30	-	-	1.07	0.0079	5473.81	5477.31	5476.21	2.37	5479.68	5478.61	-
MH1	-	-	-	-	-	-	-	-	-	5479.68	5478.61	0.84	5480.52	5479.45	5484.34
P1	36	55.20	135.38	7.81	-	-	0.95	0.0069	5476.45	5480.52	5479.45	0.94	5481.46	5480.52	-

Table B:

	Losses							Loss Coefficients							
Str ID	Hf	Hb	Hstr	Hc	He	Hj	Total	Dstr	Ko	CD	Cd	Cq	Cp	Cb	K
Outfall	-	-	-	-	-	-	-	-	-	-	-	-	-	-	-
P8	0.51	-	-	-	-	-	0.51	-	-	-	-	-	-	-	-
MH6	-	-	1.36	-	-	-	1.36	7.01	1.137	1.000	0.832	1.000	1.000	1.000	0.946
P6	1.58	-	-	-	-	-	1.58	-	-	-	-	-	-	-	-
MH5	-	-	0.21	-	-	-	0.21	5.84	0.200	1.000	0.746	1.000	1.000	1.000	0.149
P5	0.50	-	-	-	-	-	0.50	-	-	-	-	-	-	-	-
MH4	-	-	0.20	-	-	-	0.20	6.00	0.200	1.000	0.758	1.000	1.000	1.000	0.152
P4	2.69	-	-	-	-	-	2.69	-	-	-	-	-	-	-	-
MH3	-	-	0.20	-	-	-	0.20	5.00	0.238	1.000	0.679	1.000	1.000	1.000	0.162
P3	1.97	-	-	-	-	-	1.97	-	-	-	-	-	-	-	-
MH2	-	-	0.16	-	-	-	0.16	5.24	0.204	1.000	0.698	1.000	1.000	1.000	0.143
P2	2.37	-	-	-	-	-	2.37	-	-	-	-	-	-	-	-
MH1	-	-	0.84	-	-	-	0.84	5.20	1.134	1.000	0.695	1.000	1.000	1.000	0.788
P1	0.94	-	-	-	-	-	0.94	-	-	-	-	-	-	-	-

ATTACHMENT 6a

COSTCO WHOLESALE OFFSITE STORM DRAIN - ULTIMATE CONDITIONS

==========
Storm & Sanitary SelectCAD Hydraulic Grade Line Calculations

Drainage File: P:\00198\Hydro\design\Control\00198.sdb

Design File: P:\00198\HYDRO\DESIGN\DRAWING\FINAL\00198DSGN.DWG

Display Log: P:\00198\HYDRO\DESIGN\DRAWING\FINAL\ult_hgl.log

Date: Wednesday, May 03, 2000 05:26:42
==========

HGL/EGL Computations:

Table A:

Struct ID	D (in)	Q (cfs)	L (ft)	V (ft/s)	d (ft)	dc (ft)	$V^2/2g$ (ft)	Sf (ft/ft)	Dnstrm Soffit (ft)	EGLdn (ft)	HGLdn (ft)	Tot Loss (ft)	EGLup (ft)	HGLup (ft)	Rim Elev. (ft)
Outfall	-	-	-	-	-	-	-	-	-	-	-	-	-	5466.50	-
P8	36	64.60	48.32	9.14	-	-	1.30	0.0095	5461.50	5467.80	5466.50	0.46	5468.26	5466.96	-
MH6	-	-	-	-	-	-	-	-	-	5468.26	5466.96	1.22	5469.48	5468.18	5472.61
P6	36	64.60	150.15	9.14	-	-	1.30	0.0095	5463.00	5469.48	5468.18	1.43	5470.91	5469.61	-
MH5	-	-	-	-	-	-	-	-	-	5470.91	5469.61	0.19	5471.09	5469.80	5471.09
P5	36	59.00	52.57	8.35	-	-	1.08	0.0079	5467.10	5471.09	5469.80	0.42	5471.51	5470.43	-
MH4	-	-	-	-	-	-	-	-	-	5471.51	5470.43	0.16	5471.67	5470.59	5472.21
P4	36	58.40	290.43	8.26	-	-	1.06	0.0078	5467.80	5471.67	5470.59	2.26	5473.93	5472.87	-
MH3	-	-	-	-	-	-	-	-	-	5473.93	5472.87	0.15	5474.08	5473.02	5476.71
P3	36	52.70	243.86	7.46	-	-	0.86	0.0063	5471.71	5474.08	5473.02	1.54	5475.62	5474.76	-
MH2	-	-	-	-	-	-	-	-	-	5475.62	5474.76	0.12	5475.75	5474.88	5482.11
P2	36	51.40	301.33	7.27	-	-	0.82	0.0060	5473.81	5475.75	5474.88	1.81	5477.56	5476.74	-
MH1	-	-	-	-	-	-	-	-	-	5477.56	5476.74	0.50	5478.06	5477.23	5484.34
P1	36	46.80	135.38	6.62	-	-	0.68	0.0050	5476.45	5478.06	5477.23	0.68	5478.73	5478.05	-

Table B:

	Losses							Loss Coefficients							
Str ID	Hf	Hb	Hstr	Hc	He	Hj	Total	Dstr	Ko	CD	Cd	Cq	Cp	Cb	K
Outfall	-	-	-	-	-	-	-	-	-	-	-	-	-	-	-
P8	0.46	-	-	-	-	-	0.46	-	-	-	-	-	-	-	-
MH6	-	-	1.22	-	-	-	1.22	6.96	1.137	1.000	0.828	1.000	1.000	1.000	0.942
P6	1.43	-	-	-	-	-	1.43	-	-	-	-	-	-	-	-
MH5	-	-	0.19	-	-	-	0.19	5.51	0.200	1.000	0.720	1.000	1.000	1.000	0.144
P5	0.42	-	-	-	-	-	0.42	-	-	-	-	-	-	-	-
MH4	-	-	0.16	-	-	-	0.16	5.63	0.200	1.000	0.729	1.000	1.000	1.000	0.146
P4	2.26	-	-	-	-	-	2.26	-	-	-	-	-	-	-	-
MH3	-	-	0.15	-	-	-	0.15	4.16	0.238	1.000	0.608	1.000	1.000	1.000	0.145
P3	1.54	-	-	-	-	-	1.54	-	-	-	-	-	-	-	-
MH2	-	-	0.12	-	-	-	0.12	3.95	0.238	1.000	0.590	1.000	1.000	1.000	0.140
P2	1.81	-	-	-	-	-	1.81	-	-	-	-	-	-	-	-
MH1	-	-	0.50	-	-	-	0.50	3.33	1.134	1.000	0.532	1.000	1.000	1.000	0.603
P1	0.68	-	-	-	-	-	0.68	-	-	-	-	-	-	-	-

ATTACHMENT 6b