CITY OF
Albuquerque
Public Works Department

March 17, 1997

Martin J. Chávez, Mayor

Robert E. Gurulé, Director

Rick Beltramo, P.E.
AVID Engineering, Inc.
5801 Osuna Road NE, Suite 200
Albuquerque, New Mexico 87109

RE: ENGINEER'S CERTIFICATION FOR WILLOW WOOD SUBDIVISION UNIT 5, (L21/D37A2) SUBMITTED FOR RELEASE OF FINANCIAL GUARANTEES, ENGINEER'S STAMP DATED 3/6/97.

Dear Mr. Beltramo:

Based on the information provided in the submittal of March 6, 1997, the above referenced plan is adequate to satisfy the requirement for Subdivision Certification for release of financial guarantees per the Infrastructure List.

If you should have any questions, or if I may be of further assistance to you, please call me at 924-3982.

Sincerely,

Susan Calongne

Susan M. Calongne, P.E.
City/County Floodplain Administrator

c: Terri Martin (Work Order No. 4604.94)
File

DRAINAGE INFORMATION SHEET

PROJECT TITLE: WILLOW WOOD UNIT 5 ZONE ATLAS/DRAINAGE FILE# L-21 / D37 A 2

LEGAL DESCRIPTION: **WILLOW WOOD , UNIT 5**

CITY ADDRESS: **JUAN TABO AND HERMAN ROSER**

ENGINEERING FIRM: AVID ENGINEERING, INC., CONTACT: Rick Beltramo
ADDRESS: 5801 Osuna Rd. NE, Suite 200 87109 PHONE: 881-5357

OWNER: MANZANO MESA LTD / CURB INC. CONTACT: CHARLES A. HAEGELIN

ADDRESS: 6301 INDIAN SCHOOL RD NE, SUITE 680 PHONE: 881-9190

ARCHITECT: NA CONTACT: NA
ADDRESS: NA PHONE: NA
SURVEYOR: AVID ENGINEERING, INC. CONTACT: Ruan Bacigalupa
ADDRESS: Same as Above PHONE: 881-5357
CONTRACTOR: New Concepts, Inc. CONTACT: NA
ADDRESS: NA PHONE: NA

PRE-DESIGN MEETING:

____ YES
XX NO
____ COPY OF CONFERENCE RECAP SHEET PROVIDED

DRB NO. 92-106
EPC NO. ____
PROJECT NO. 4604.94

TYPE OF SUBMITTAL:

____ DRAINAGE REPORT
____ DRAINAGE PLAN
____ CONCEPTUAL GRADING & DRAIN PLAN
____ GRADING PLAN
____ EROSION CONTROL PLAN
XX ENGINEER'S CERTIFICATION

CHECK TYPE OF APPROVAL SOUGHT:

____ SECTOR PLAN APPROVAL
____ SKETCH PLAT APPROVAL
____ PRELIMINARY PLAT APPROVAL
____ SITE DEVELOPMENT PLAN APPROVAL
____ FINAL PLAT APPROVAL
____ BUILDING PERMIT APPROVAL
____ FOUNDATION PERMIT APPROVAL
____ CERTIFICATE OF OCCUPANCY APPROVAL
____ ROUGH GRADING PERMIT APPROVAL
____ GRADING/PAVING PERMIT APPROVAL
XX OTHER ~~WORK ORDER RELEASE~~ (SPECIFY) SIA + FINANCIAL RELEASE.

DATE SUBMITTED: ~~3-5-97~~ 3-6-97

BY: Rick Beltramo

AVID ENGINEERING, INC.

March 6, 1997

Civil • Structural • Transportation

Ms. Calongne P.E.
City/County Floodplain Administrator
Public Works Department
Plaza Del Sol
Albuquerque, NM 87103

RE: WILLOW WOOD SUBDIVISION, UNIT 5
GRADING AND DRAINAGE CERTIFICATION Drainage File L21/D37

Dear Susan:

Submitted for your review is the Grading and Drainage Certification for Unit 5 (preliminary plat units 7 & 8). This certification is the standard certification and includes a drainage information sheet, city record drawings and site grading certification drawings.

All requirements have been meet for city final acceptance of the public improvements except for the hydrology approval of the grading certification. The Subdivision Improvements Guarantee (SIA) is due to expire in the very near future. The owner does not want to extend the financial guarantees. In order to meet the deadline, your assistance is needed to expedite the process. Any assistance would be greatly appreciated. Should you have any questions or need additional information, please call anytime.

Sincerely,

Rick Beltramo, P.E.
Project Manager

Attachments
cc: Stan Strickman, Trails Inc.

5801 Osuna Rd. NE • Suite 200 • Albuquerque, NM 87109 • (505) 881-5357 • Fax 505-881-7602

Rick Beltran

Public Works Department

Martin J. Chávez, Mayor

February 27, 1997

Robert E. Gurulé, Director

REGISTERED MAIL/RETURN RECEIPT REQUESTED

Charles A. Haegelin, President
MANZANO MESA LIMITED PARTNERSHIP
6301 Indian School Rd. NE #680
Albuquerque, NM 87110

Re: NOTICE OF UPCOMING DEADLINE FOR COMPLETION OF IMPROVEMENTS AND CITY'S INTENTION TO CALL FINANCIAL GUARANTY - SIA

PROJECT: WILLOW WOOD UNIT 5; PROJECT NO: 4604

Dear Mr. Haegelin:

I am the Assistant City Attorney who represents the City in matters relating to construction of infrastructure by subdividers. As you are aware, MANZANO MESA LIMITED PARTNERSHIP (the "Subdivider") signed a 1ST EXTENSION TO SUBDIVISION IMPROVEMENTS AGREEMENT (the "Agreement") with the City committing the Subdivider to complete construction of required infrastructure by APRIL 1, 1996 ("Construction Deadline"). The Subdivider elected to execute an original agreement which did not use the entire two-year maximum time allowed by the Subdivision Ordinance for completion of construction. Therefore, if construction will not be completed by the Construction Deadline, the City may grant the Subdivider an extension of time to complete the construction of the required subdivision improvements if the Subdivider meets the following conditions.

The City may grant an extension, not to exceed a total of two years from the date of execution of the original agreement with the City, if the Subdivider submits a written request for extension of time to construct, and delivers the request to the City Engineering Division, Project Review Section, Room 402 at least fifteen (15) days prior to the APRIL 1, 1997 Construction Deadline. The City will review the request and apparent consequences of granting an extension. If the extension is allowed, the Subdivider will be required to complete an extension agreement and submit the required, revised financial guaranty to the City by APRIL 1, 1997.

THIS LETTER PROVIDES NOTICE TO THE SUBDIVIDER THAT, IF THE CONSTRUCTION IS NOT COMPLETED BY THE APRIL 1, 1997 CONSTRUCTION DEADLINE, THE CITY MAY DECLARE THE AGREEMENT TO BE IN DEFAULT AND WILL HOLD MANZANO MESA LIMITED PARTNERSHIP AND THE SURETY, JOINTLY AND SEVERALLY LIABLE FOR 125% OF THE COST

OF COMPLETING THE IMPROVEMENTS UNLESS: (1) THE SUBDIVIDER SUBMITS A WRITTEN REQUEST FOR EXTENSION BY MARCH 17, 1997; AND (2) (IF THE CITY APPROVES THE EXTENSION) THE SUBDIVIDER SUBMITS THE REQUIRED EXTENSION AGREEMENT AND FINANCIAL GUARANTY TO THE CITY BY APRIL 1, 1997.

PLEASE NOTE THAT THE CITY REQUIRES THE FINANCIAL INSTITUTION ISSUING THE FINANCIAL GUARANTY TO BE A FEDERALLY INSURED INSTITUTION OR A SURETY LICENSED TO DO BUSINESS IN NEW MEXICO.

Please immediately contact the Project Administrator, Teresa Martin at 924-3997 and tell her whether: (1) the construction will be completed by the APRIL 1, 1997 Construction Deadline; or (2) the Subdivider will be submitting a written request for extension by MARCH 17, 1997; and, if an extension is granted by the City, the Subdivider then will be submitting an extension agreement and related financial guaranty to the City by APRIL 1, 1997.

Very truly yours,

Kevin J. Curran
Assistant City Attorney

KJC/tsl

cc: File

#1 (3/88)

Susan, can we have City approval by
If not, I will need to begin
process Public Hearing Submittal
(must be submitted in Fri, 12:00 noon, March 14th)

AVID ENGINEERING, INC.
Civil • Structural • Transportation
5801 Osuna Rd. NE • Suite 200 • Albuquerque, NM 87109
(505) 881-5357 • Fax 505-881-7602

LETTER OF TRANSMITTAL

TO: Susan Calongne, P.E.	DATE: 3-6-97
COA - Plaza Del Sol	PROJECT: Willow Wood Unit 5
	PROJECT NO.: 4604.94
ATTN:	DRN. FILE: L-21/D37
RE:	DRB: 92-106
	AVID 5054.73

WE ARE SENDING:

QTY.	DESCRIPTION	FOR
1	Set G & D Cert	Review & Approval
1	Drn. Info Sheet	Your Information
1	Copy SIA Call Letter	Your Information

REMARKS:

BY: [signature]

RECEIVED: Lina Pool 3-6-97 DATE:

If enclosures are not as noted, kindly notify us at once.

The contractor's correction period began the date of this letter and is effective for a period of one (1) year.

Sincerely,

Russell B. Givler, P.E.
Chief Construction Engineer,
Public Works Department

cc: Rick Beltramo, Avid Engineering
Tom Lakeman,New Concepts
Fred Aguirre, Engineering Group, PWD
Tina Pohl, Engineering Group, PWD
Terri Martin, Engineering Group, PWD
Martin Barker, Engineering Group, PWD
Linda Adamsko, Special Assessments, DFM
Sam Hall, Operations Group, PWD
Jim Fink, Operations Group, PWD
Dean Wall, Engineering Group, PWD
Jack McDonough, Water/Wastewater Group, PWD
Ray Chavez, Traffic Engineering, PWD
Josie Jaramillo, New Meter Sales, Finance Group, PWD
Richard Zamora, Engineering Group, PWD
f/Project No. 4604.94
f/Readers
f/Warranty:Contract

City of Albuquerque

P. O. BOX 1293 ALBUQUERQUE, NEW MEXICO 87103
PUBLIC WORKS DEPARTMENT

March 14, 1997

CERTIFICATE OF WORK ORDER COMPLETION

Manzano Mesa Limited Partnership
6301 Indian School NE
Suite 680
Albuquerque, NM 98110

RE: WILLOWWOOD SUBDIVISION UNIT 5 PROJECT NO. 4604.94
MAP NO. L-21

Dear Sir:

This is to certify that the City of Albuquerque accepts Project No. 4604.94 as being completed according to approved plans and construction specifications. Please be advised this certificate of completion and acceptance shall only become effective upon final plat approval and filing in the office of the Bernalillo County Clerk's Office.

The project is described as follows:

- Installation of waterline and services, storm drain, paving along Jewel Cave Road.
- Installation of water and sewerline with sevices, paving along Los Padres Street.
- Installed water, sewerline with services, storm drain and paving along Chiricahua Street.
- Installed water, sewerline with services, storm drain and paving along Thunder Basin Road.
- Installed water, sewerline with services, storm drain and paving along Wasatch Road.
- Installed water, sewerline with services, storm drain and paving along Wolf Creek Road.
- Installed waterline and services and paving along Arches Road.
- Also on the above streets constructed wheelchair ramps curb and gutter. Fire hydrants were installed.

CITY OF
Albuquerque

March 18, 1997

Martin J. Chávez, Mayor

CERTIFICATION OF COMPLETION AND ACCEPTANCE

Charles A. Haegelin
President of General Partner
Manzano Mesa Limited Partnership
6301 Indian School Rd. NE #680
Albuquerque, NM 87110

RE: WILLOW WOOD UNIT 5; CITY PROJECT NO. 4604, MAP NO. L-21

Dear Mr. Haegelin:

This is to certify that the City of Albuquerque accepts the construction of the infrastructure provided in the Work Order Construction Plans, City Project No. 4604.94 as compliance with completing the required public infrastructure listed in the Subdivision Improvements Agreement (SIA) between Manzano Mesa Limited Partnership and the City of Albuquerque executed on May 6, 1996.

Having satisfied the requirements referenced above, the SIA and any associated Financial Guaranty, held by the City, can now be released. The Contractors one-year warranty period started at the date of acceptance by the Chief Construction Engineer, dated March 14, 1997.

Please be advised this Certificate of Completion and Acceptance shall only become effective upon final plat approval and filing in the office of the Bernalillo County Clerk's Office.

Should you have any questions or issues regarding this project, please contact me.

Sincerely,

John R. Castillo, P.E.
Acting City Engineer
Dev. & Bld. Services Div.
Public Works Department

c. Rick Beltramo, AVID Engineering, Inc.
Robert S. Hoog, AIF, Insurance Company of the West
Teresa Martin, Project Administrator, Project Review
Theresa Lucero, Assistant Project Administrator , PWD
Kym Dicome, DRB Chairman, Planning
Fred Aguirre, Hydrology, PWD
Richard Dourte, Transportation Development, PWD
John M. Stomp, Jr. III, Utility Development, PWD
Ed Stang, Planning Section, CIP
f/Project file

Author: John P. Curtin at CABQ-PUBWORKS
Date: 6/24/96 4:35 PM
Priority: Normal
TO: David L. Cates at CABQ-PWDSUN
BCC: John P. Curtin
Subject: Willow Wood 5 Storm Drain

---------- Message Contents ----------

David:

I have no objection to the storm drain modifications proposed by Rick Beltramo of AVID. The slow velocities will cause sediment problems but Rick's calculations indicate that it won't be any worse than what was proposed originally.

John P. Curtin 768-2727

AVID Engineering, Inc.

FAX COVER SHEET

REVISED STORM DRAIN AT CHIRICAHUA AND WOLF CREEK
WILLOW WOOD SUBDIVISION, UNIT 5

DATE: **Monday, June 24, 1996** AVID JN 5054.53

FAX TO: **John Curtin, COA Hydrology** 768-3629

FROM: **Rick Beltramo, AVID Engineering, Inc.** **3 pages including cover sheet**

John: As you requested, I re-ran the HGL spread sheet analysis. The revised geometry only resulted in an in crease of 0.02 ft., very small. I consider this change in the HGL is too small to warrant a revision to the plans or the drainaghe report.

Please call if you have any questions.

FAXED 6-24-96

file:c\projects\willow\corr\fax6.doc

JUN 27 1996

SUMMARY OF HYDRAULIC CALCULATIONS, CHIRICAHUA ST - 100 Year Event
CLOSED CONDUIT

REVISED HGL ANALYSIS BASED ON REVISED HYMO, FEB 8, 1996
revised june 24, 1996
PROJECT WILLOWWOOD
BY: RLB
FILE:PROJECTS\WILLOW\HYD\HGL96.WB1

1	2	3	4	5	6	7	8	9	10		11	12	13	14		15	16	17	18	19	20	21	22			Comments
											JUNCTION		LOSSES													
STATION	STRUCT	D	Q	A	V	K	Sf	L	DELTA	Q	D	ANGLE	hf	hb	Aavg	hj	hmh	ht	hmsc	SUM	E.G.	hv	H.G.	STATION	STRUCT	
OUTFALL	MH	AP 19																			5484.16	0.54	5483.62			(1) AND (2)
		60	116	19.64	5.91	2604	0.0020	159					0.32					0.01		0.01	5484.17	0.54	5483.63	OUTFALL	MH	100 YEAR
STA 19+11	CB JUNCTION	90 D CONF							5	7	46	90			19.64	0.15				0.32	5484.49	0.54	5483.95			100 YEAR
		60	109	19.64	5.55	2604	0.0018	57					0.10							0.15	5484.64	0.48	5484.16	STA 19+11	CB JUNCTION	(3)
STA 18+54	H & V BEND	7 D BEND							7	0				0.03	19.64		0.02	0.01		0.10	5484.73	0.48	5484.26			
		60	109	19.64	5.55	2604	0.0018	108					0.19							0.06	5484.80	0.48	5484.32	STA 18+54	H & V BEND	
STA 17+60	MH	90 D CONF								20	30	90			16.10	0.03	0.03			0.19	5484.98	0.48	5484.51			
		48	83	12.57	6.60	1436	0.0033	146					0.49							0.07	5485.05	0.68	5484.38	STA 17+46	MH	
STA 16+00	2-WYES	45 D CONF								22	24	45			12.57	0.62	0.02			0.49	5485.54	0.68	5484.86			
		48	61	12.57	4.85	1436	0.0018	161					0.29							0.64	5486.18	0.37	5485.82	STA 16+00	2-WYES	
STA 14+39	MH	90 D CONF								14	30	90			12.57	0.30	0.01			0.29	5486.47	0.37	5486.11			
		48	47	12.57	3.74	1436	0.0011	258					0.28							0.31	5486.78	0.22	5486.56	STA 14+39	MH	
STA 11+81	MH	90 D CONF								25	30	90			9.82	0.34	0.01			0.28	5487.06	0.22	5486.84			
		36	22	7.07	3.11	667	0.0011	206					0.22							0.35	5487.40	0.15	5487.25	STA 11+81	MH	
STA 9+75	MH	45 D BEND							45	0				0.02	7.07		0.01			0.22	5487.63	0.15	5487.48			
		36	22	7.07	3.11	667	0.0011	75			45		0.06							0.03	5487.66	0.15	5487.51	STA 9+75	MH	
STA 10+50	MH	45 D BEND							45					0.02	3.53		0.01			0.08	5487.74	0.15	5487.59			
																				0.03	5487.77	0.15	5487.62	STA 10+50	MH	

Before Revision

REVISED GEOMETRY CHANGES HGL +0.04 ft, from 5487.62 to 5487.64. RELATIVELY, A "NO-IMPACT CHANGE TO THE HGL.

SUMMARY OF HYDRAULIC CALCULATIONS, CHIRICAHUA ST - 100 Year Event
CLOSED CONDUIT

REVISED HGL ANALYSIS BASED ON REVISED HYMO, FEB 8, 1996
PROJECT WILLOWWOOD
BY: RLB
FILE.PROJECTS\WILLOW\HYD\HGL96.WB1

REVISED June 24, 1996

1	2	3	4	5	6	7	8	9	10		11	12	13	14		15	16	17	18	19	20	21	22			Comments
											JUNCTION		LOSSES													
STATION	STRUCT	D	Q	A	V	K	Sf	L	DELTA	Q	D	ANGLE	hf	hb	Aavg	hj	hmh	ht	hmisc	SUM	E.G.	hv	H.G.	STATION	STRUCT	
																					5484 16	0.54	5483.62			(1) AND (2)
OUTFALL	MH	AP 19																0.01		0 01	5484.17	0 54	5483 63	OUTFALL	MH	100 YEAR
		60	116	19.64	5.91	2604	0 0020	159					0 32							0.32	5484 49	0 54	5483 95			100 YEAR
STA 19+11	CB JUNCTION	90 D CONF							5	7	46	90			19.64	0.15				0.15	5484.64	0.48	5484.16	STA 19+11	CB JUNCTION	(3)
		60	109	19.64	5.55	2604	0.0018	57					0.10							0.10	5484.73	0.48	5484.26			
STA 18+54	H & V BEND	7 D BEND							7	0				0 03	19.64		0 02	0.01		0.06	5484.80	0.48	5484.32	STA 18+54	H & V BEND	
		60	109	19.64	5 55	2604	0.0018	94					0.16							0.16	5484.96	0.48	5484.48			
STA 17+60	MH	90 D CONF								20	30	90			16.10	0 03	0.03			0.07	5485.03	0 68	5484.35	STA 17+46	MH	
		48	83	12.57	6 60	1436	0.0033	160					0 53							0.53	5485.56	0 68	5484.89			
STA 16+00	2-WYES	45 D CONF								22	24	45			12 57	0 62	0 02			0 64	5486 20	0 37	5485 84	STA 16+00	2-WYES	
		48	61	12 57	4 85	1436	0.0018	161					0 29							0 29	5486 49	0.37	5486 13			
STA 14+39	MH	90 D CONF								14	30	90			12 57	0 30	0.01			0 31	5486 80	0 22	5486.59	STA 14+39	MH	
		48	47	12.57	3 74	1436	0 0011	258					0 28							0.28	5487.08	0.22	5486.86			
STA 11+81	MH	90 D CONF								25	30	90			9.82	0 34	0 01			0.35	5487.43	0 15	5487 28	STA 11+81	MH	
		36	22	7.07	3 11	667	0 0011	206					0 22							0.22	5487 65	0.15	5487.50			
STA 9+75	MH	45 D BEND							45	0				0 02	7 07		0 01			0 03	5487.68	0 15	5487.53	STA 9+75	MH	
		36	22	7.07	3.11	667	0.0011	75			45		0 08							0 08	5487.76	0 15	5487.61			
STA 10+50	MH	45 D BEND							45					0 02	3.53		0.01			0 03	5487.79	0.15	5487.64	STA 10+50	MH	

NOTES
(1) MAINLINE FLOW = 387 cfs @ Tp=1 567 hrs
(2) CONFLUENCE AT MAINLINE IS NON-PRESSURE FLOW, USE 0 8D FOR STARTING WSEL
(3) VERTICAL CONFLUENCE AT CATCH BASIN

revised HGL

MANHOLE MOVED NORTH 15', to Sta ~17+60.

AVID ENGINEERING, INC.
Civil • Structural • Transportation
5801 Osuna Rd. NE • Suite 200 • Albuquerque, NM 87109
(505) 881-5357 • Fax 505-881-7602

LETTER OF TRANSMITTAL

TO: John Curtin	DATE: 6-20-96
COA - Hydrology	PROJECT: Willowwood Subd.
	PROJECT NO.: 5054.53
ATTN:	
RE: Field Revisions	

WE ARE SENDING:

QTY.	DESCRIPTION	FOR
1 set	Design Revision,	Your Review & Approval
	Willow Wood 5,	
	sheets 16, 20, 21 & 22	

REMARKS: John, our plans for the Chiricahua SD are in conflict with the SAS. I have proposed a field design change which would resolve the conflict. The design has prepared and submitted to the contractor Wednesday for review. Today I submitted the plans to City Survey, Construction and you.

Please review and comment on the revision. I would like to obtain approval without having to go through a DRC review.

BY: [signature] JUN 20 1996

RECEIVED: N. Lopez DATE: 6/20/96

If enclosures are not as noted, kindly notify us at once.

CITY OF
Albuquerque
P.O. Box 1293 Albuquerque, NM 87103

May 9, 1996

Martin J. Chávez, Mayor

Rick Beltramo, PE
AVID Engineering
6100 Seagull Ln NE Ste 102
Albuquerque, NM 87109

RE: DRAINAGE REPORT FOR WILLOW WOOD SUBD (L-21/D37A2)
RECEIVED APRIL 5, 1996 FOR WORK ORDER & FINAL PLAT
REVISED March 1996

Dear Mr. Beltramo:

Based on the information included in the submittal referenced above and the additional information provided May 8, 1996; City Hydrology accepts the revised Report for Work Order & Final Plat. It is City Hydrology's understanding that DRB approved the Grading Plan dated 10/24/95.

Engineer's Certification of grading & drainage per DPM checklist must be accepted before the Financial Guaranty will be released.

If you have any questions about this project, You may contact me at 768-2727.

Sincerely,

John P. Curtin, P.E.
Civil Engineer/Hydrology

c: Andrew Garcia
Fred Aguirre, DRB 92-0106
Stan Strickman, Manzano Mesa, 6301 Indian School NE Suite 208, 87110

AVID ENGINEERING, INC.

Civil • Structural • Transportation

May 7, 1996

MAY - 8 1996

HYDROLOGY DIV.

Mr. John Curtin, P.E.
City Engineer/Hydrology
Public Works Department
City/County Building
Albuquerque, NM 87103
[Hand Delivered]

RE: WILLOW WOOD, UNIT 5 - DRAINAGE REPORT COMMENTS

Dear John:

This letter addresses your most recent comments to the Unit 5 drainage report. Below is a brief restatement of your comments and associated response.

Comment: Are catch basin street flow depths and associated analysis correct? Does the roll type curb meet DPM criteria?

Response: I reviewed the AHYMO analysis in detail and revised it to evaluate actual street flow depths verses the more approximate method used in the original analysis, using roll type curb. In general the street flows and flow depths used were conservative except for one case. Wastach Rd. was slightly under capacity, using roll type curb. Based on the revised analysis, the flow depth at the first inlet was 0.363 ft. verses 0.333 ft. available. Please note that the flow is in subcritical regime. The total energy is 0.423 ft. verses 0.533 ft. available. In summary, the flow depth exceeds the curb by 0.03 ft. (.36 inches).

Standard curb driveway cuts disrupt flow and is less efecient than roll curb at these flow rates, and especially at the lower frequency storm events. For this reason I recommend using roll curb.

Should you not agree with this position please let me know and I will change the curb to standard curb and gutter. Attached are copies of portions of the AHYMO analysis which give street flow depths computed.

Comment: Should a clogging factor be applied to the battery of inlets at the north end of Chiricahua St.?

Response: I revised the analysis to include a clogging 20% clogging factor to the grates. I also revised the curb opening analysis to reflect vertical support members, which reduces the effective area. Both of these factors reduced the ability of the inlet to collect street flow.

5801 Osuna Rd. NE • Suite 200 • Albuquerque, NM 87109 • (505) 881-5357 • Fax 505-881-7602

The net result was an increase in depth of ponding over the inlet from 1.4 ft. to 1.55 ft. (elevation 88.35). The changes seemed to have relatively minor effects on the depth of ponding. I believe that this is due to the fact that the equations used for analyzing inlet capacity in sump conditions are based on the weir equation and the orifice equation. Both of these equations are exponential equations which yield a large increase in capacity verses a small increase in depth.

In summary, the increase in depth of ponding is still acceptable. The lowest building pad is elevation 90.0, providing 1.65 ft. of freeboard for the 2x100 year event. Attached is the revised analysis.

Comment: The geometry and dimensions shown on the construction plans for the sump inlet appear to be incorrect.

Response: Yes, the dimensions shown were incorrect, and have been corrected on the construction plans prior to sign-off by Billy Goolsby. This comment does not affect the drainage report, only the construction plans.

I and the developer recognize and appreciate you efforts to expedite this project. Due to your efforts, the developer was able to meet the project schedule. Should you have any questions, or need any revisions to the report or the construction plans, please call anytime.

Sincerely:

Rick Beltramo,P.E.
Project Manager

Attachments
c: Stan and Mary Strickman, Trails Management, Inc.

FILE: C:\PROJECTS\WILLOW\CORR\CUTAIN1.DOC

AVIC ENGINEERING, INC.

REVISED CATCH BASIN ANALYSIS

STREET	Dn (ft)	D AVAILABLE (ft)	E (ft)	E AVAILABLE (ft)
JEWEL CAVE	0.6	0.67	0.77	0.97
Q @ 1st Grate = 36.7 cfs				
THUNDERBASIN				
Q1st = 13 cfs	0.458	0.67	0.51	0.97
WASTACH	0.363	0.353*	0.423	0.533* [1]
Q - 1st Grate = 8.6 cfs				
WOLF CREEK	0.46	0.67	0.57	0.97
Q 1st GRATE = 18.4 cfs [2]				

* ROLL TYPE CURB AND GUTTER

NOTES [1] FLOW DEPTH EXCEEDS CURB BY 0.03 ft.
[2] FLOW INCREASED 3 cfs FOR ARCHES/TONY SANCHEZ BY-PASS FLOW

PROJECT NAME Willow Wood, Unit 5 SHEET 1 OF 13
PROJECT NO. BY DATE 4/5/96
SUBJECT Supplemental Analysis CH'D DATE

R. AHYMO Analysis To Check
Dev Rpt Analysis.
- Conclusion: Analysis closely meets findings in this AHYMO.

4/15/96
RLB

AHYMO PROGRAM (AHYMO194) - AMAFCA Hydrologic Model - January, 1994
RUN DATE (MON/DAY/YR) = 04/15/1996
START TIME (HR:MIN:SEC) = 09:33:50 USER NO.= AVID_NM.I01
INPUT FILE = C:\PROJECTS\WILLOW\HYD\CHIR.IN

*WILLOW WOOD 15APRIL96
*COMPUTATIONS FOR 6 HR STORM (TYPE 1), ZONE 3
*ALL AREAS ARE 5 UNITS/ACRE: 50% D, 25% C, 25% B ASSUMED
*FILE: C:\PROJECTS\WILLOW\CHIR.IN
*REVISIONS [1] SCHOOL SITE PARAMETERS PER APS, BASIN C-1-A
* [2] PHASE 6, UNIT 9 ADDED TO WILLOW WOOD, C-1-B
* [3] OFFSITE DIVERTED BY FUTURE IMPROVEMENTS, C-1-C
START TIME=0.0 HR PUNCH CODE=0
RAINFALL TYPE=1 (SIX HR STORM) RAIN QUARTER=0.0 IN
RAIN ONE=2.07 IN RAIN SIX=2.54 IN
RAIN DAY=0.0 IN DT=0.0333333 HRS

COMPUTED 6-HOUR RAINFALL DISTRIBUTION BASED ON NOAA ATLAS 2 - PEAK AT 1.40 HR.

DT = .033333 HOURS END TIME = 5.999995 HOURS

.0000	.0029	.0059	.0090	.0121	.0154	.0186
.0220	.0254	.0289	.0325	.0362	.0400	.0439
.0479	.0520	.0562	.0606	.0651	.0698	.0746
.0796	.0848	.0902	.0958	.1016	.1077	.1141
.1209	.1280	.1355	.1412	.1473	.1539	.1679
.1994	.2478	.3173	.4122	.5369	.6959	.8938
1.1353	1.3587	1.4522	1.5311	1.6013	1.6652	1.7240
1.7786	1.8297	1.8775	1.9225	1.9650	2.0051	2.0431
2.0791	2.1132	2.1456	2.1763	2.2055	2.2128	2.2197
2.2263	2.2327	2.2388	2.2446	2.2502	2.2557	2.2610
2.2661	2.2710	2.2759	2.2805	2.2851	2.2896	2.2939
2.2982	2.3023	2.3064	2.3103	2.3142	2.3181	2.3218
2.3255	2.3291	2.3326	2.3361	2.3395	2.3429	2.3462
2.3495	2.3527	2.3559	2.3590	2.3621	2.3651	2.3681
2.3711	2.3740	2.3768	2.3797	2.3825	2.3853	2.3880
2.3907	2.3934	2.3960	2.3987	2.4012	2.4038	2.4063
2.4088	2.4113	2.4138	2.4162	2.4186	2.4210	2.4234
2.4257	2.4280	2.4303	2.4326	2.4349	2.4371	2.4393
2.4415	2.4437	2.4459	2.4480	2.4501	2.4522	2.4543
2.4564	2.4585	2.4605	2.4626	2.4646	2.4666	2.4686
2.4705	2.4725	2.4744	2.4764	2.4783	2.4802	2.4821
2.4840	2.4858	2.4877	2.4895	2.4913	2.4932	2.4950
2.4968	2.4986	2.5003	2.5021	2.5038	2.5056	2.5073
2.5090	2.5107	2.5125	2.5141	2.5158	2.5175	2.5192
2.5208	2.5225	2.5241	2.5257	2.5273	2.5290	2.5306
2.5322	2.5337	2.5353	2.5369	2.5384	2.5400	

PRINT HYD ID=10 CODE=1

OUTFLOW HYDROGRAPH REACH .00

RUNOFF VOLUME = .00000 INCHES = .0000 ACRE-FEET

```
*****************************************************************************
*
*
*
*COMPUTE HYDROGRAPH FOR BASINS A-14,A-15
COMPUTE NM HYD     ID=10  HYD NO=105.0  DA=0.0128 SQ MI
             %A=0.0  %B=25.0  %C=25.0  %D=50.0
             TP=0.1333 HR
             MASS RAINFALL=-1

   K =  .072649HR   TP =  .133300HR   K/TP RATIO =  .545000    SHAPE CONSTANT, N =
7.106420
   UNIT PEAK =  25.268   CFS  UNIT VOLUME =   .9989     B =  526.28     P60 = 2.0700
   AREA =     .006400 SQ MI   IA =   .10000 INCHES   INF =   .04000 INCHES PER HOUR
   RUNOFF COMPUTED BY INITIAL ABSTRACTION/INFILTRATION NUMBER METHOD - DT =
.033333


   K =  .120467HR   TP =  .133300HR   K/TP RATIO =  .903729    SHAPE CONSTANT, N =
3.920589
   UNIT PEAK =  16.797   CFS  UNIT VOLUME =   .9997     B =  349.84     P60 = 2.0700
   AREA =     .006400 SQ MI   IA =   .42500 INCHES   INF =  1.04000 INCHES PER HOUR
   RUNOFF COMPUTED BY INITIAL ABSTRACTION/INFILTRATION NUMBER METHOD - DT =
.033333

PRINT HYD        ID=10 CODE=1

                    PARTIAL HYDROGRAPH   105.00


   RUNOFF VOLUME =     1.66364 INCHES     =      1.1357 ACRE-FEET
   PEAK DISCHARGE RATE =     31.79 CFS  AT   1.500 HOURS   BASIN AREA =   .0128 SQ. MI.


*
*
*
*ROUTE DOWN JEWEL CAVE TO CHIRICAHUA
*28' SECTION, S=0.5%
COMPUTE RATING CURVE CID=1  VS NO=1  NO SEGS=1  MIN ELEV=100.00
             MAX ELEV=100.67 CH SLP=0.005  FP SLP=0.005
             N=0.017  DIST=28.0
             00.0   100.67  0.0   100.00   2.0   100.13
             14.0   100.33 26.0   100.13  28.0   100.00
             28.0   100.67

                    RATING CURVE VALLEY SECTION  1.0
                      WATER      FLOW       FLOW       TOP
                     SURFACE     AREA       RATE      WIDTH
                      ELEV      SQ FT      CFS        FT
                     100.00      .00       .00       .00
                     100.04      .02       .01      1.09
```

100.07	.08	.05	2.17
100.11	.17	.15	3.26
100.14	.31	.28	5.33
100.18	.57	.54	9.56
100.21	.99	1.04	13.79
100.25	1.55	1.84	18.02
100.28	2.26	3.01	22.25
100.32	3.12	4.59	26.48
100.35	4.09	6.96	28.00
100.39	5.08	9.97	28.00
100.42	6.07	13.39	28.00
100.46	7.06	17.21	28.00
100.49	8.04	21.39	28.00
100.53	9.03	25.92	28.00
100.56	10.02	30.79	28.00
100.60	11.01	35.98	28.00
100.63	11.99	41.48	28.00
100.67	12.98	47.29	28.00

COMPUTE TRAVEL TIME ID=11 REACH NO=1 NO VS=1 L=350 SLP=0.005

TRAVEL TIME TABLE
REACH= 1.0

WATER DEPTH FEET	AVERAGE AREA SQ.FT.	FLOW RATE CFS	TRAVEL TIME HRS
.035	.019	.01	.2375
.071	.077	.05	.1496
.106	.172	.15	.1142
.141	.312	.28	.1063
.176	.574	.54	.1039
.212	.986	1.04	.0923
.247	1.547	1.84	.0816
.282	2.257	3.01	.0730
.317	3.116	4.59	.0661
.353	4.094	6.96	.0572
.388	5.081	9.97	.0495
.423	6.068	13.39	.0440
.458	7.056	17.21	.0399
.494	8.043	21.39	.0366
.529	9.031	25.92	.0339
.564	10.018	30.79	.0316
.599	11.005	35.98	.0297
.635	11.993	41.48	.0281
.670	12.980	47.29	.0267

[ok] d=.56<.67

ROUTE ID=11 HYD NO=105.1 INFLOW ID=10
PRINT HYD ID=11 CODE=1

PARTIAL HYDROGRAPH 105.10

RUNOFF VOLUME = 1.66366 INCHES = 1.1357 ACRE-FEET
PEAK DISCHARGE RATE = 31.29 CFS AT 1.533 HOURS BASIN AREA = .0128 SQ. MI.

```
*
*
*
*COMPUTE HYDROGRAPH FOR BASINS B-4
COMPUTE NM HYD      ID=4  HYD NO=106.4  DA=0.0075 SQ MI
                %A=0.0  %B=25.0  %C=25.0  %D=50.0
                TP=0.1333 HR
                MASS RAINFALL=-1

     K =   .072649HR    TP =   .133300HR    K/TP RATIO =   .545000    SHAPE CONSTANT, N =
7.106420
     UNIT PEAK =   14.805    CFS   UNIT VOLUME =    .9987      B =   526.28      P60 = 2.0700
     AREA =      .003750 SQ MI    IA =    .10000 INCHES    INF =    .04000 INCHES PER HOUR
     RUNOFF COMPUTED BY INITIAL ABSTRACTION/INFILTRATION NUMBER METHOD - DT =
.033333


     K =   .120467HR    TP =   .133300HR    K/TP RATIO =   .903729    SHAPE CONSTANT, N =
3.920589
     UNIT PEAK =   9.8417    CFS   UNIT VOLUME =    .9991      B =   349.84      P60 = 2.0700
     AREA =      .003750 SQ MI    IA =    .42500 INCHES    INF =   1.04000 INCHES PER HOUR
     RUNOFF COMPUTED BY INITIAL ABSTRACTION/INFILTRATION NUMBER METHOD - DT =
.033333

   PRINT HYD          ID=4 CODE=1

                          PARTIAL HYDROGRAPH   106.40


     RUNOFF VOLUME =     1.66364 INCHES     =       .6655 ACRE-FEET
     PEAK DISCHARGE RATE =      18.63 CFS  AT   1.500 HOURS   BASIN AREA =   .0075 SQ. MI.


*
*
*
*JEWE CAVE TOTAL
*ADD HYDROGRAPH TO TOTAL
ADD HYD            ID=12  HYD=206.4  ID I=11  ID II=4
PRINT HYD          ID=12  CODE=1

                          PARTIAL HYDROGRAPH   206.40


   RUNOFF VOLUME =     1.66362 INCHES     =      1.8011 ACRE-FEET
   PEAK DISCHARGE RATE =      49.20 CFS  AT   1.533 HOURS   BASIN AREA =   .0203 SQ. MI.


*
*
```

```
*
*ROUTE DOWN JEWEL CAVE TO CHIRICAHUA
*28' SECTION, S=0.5%
COMPUTE RATING CURVE CID=1  VS NO=1  NO SEGS=1  MIN ELEV=100.00
          MAX ELEV=100.67 CH SLP=0.005  FP SLP=0.005
          N=0.017  DIST=28.0
          00.0   100.67  0.0   100.00   2.0   100.13
          14.0   100.33 26.0   100.13  28.0   100.00
          28.0   100.67
```

RATING CURVE VALLEY SECTION 1.0

WATER SURFACE ELEV	FLOW AREA SQ FT	FLOW RATE CFS	TOP WIDTH FT
100.00	.00	.00	.00
100.04	.02	.01	1.09
100.07	.08	.05	2.17
100.11	.17	.15	3.26
100.14	.31	.28	5.33
100.18	.57	.54	9.56
100.21	.99	1.04	13.79
100.25	1.55	1.84	18.02
100.28	2.26	3.01	22.25
100.32	3.12	4.59	26.48
100.35	4.09	6.96	28.00
100.39	5.08	9.97	28.00
100.42	6.07	13.39	28.00
100.46	7.06	17.21	28.00
100.49	8.04	21.39	28.00
100.53	9.03	25.92	28.00
100.56	10.02	30.79	28.00
100.60	11.01	35.98	28.00
100.63	11.99	41.48	28.00
100.67	12.98	47.29	28.00

```
COMPUTE TRAVEL TIME ID=13  REACH NO=1  NO VS=1  L=350  SLP=0.005
```

TRAVEL TIME TABLE

REACH= 1.0

WATER DEPTH FEET	AVERAGE AREA SQ.FT.	FLOW RATE CFS	TRAVEL TIME HRS
.035	.019	.01	.2375
.071	.077	.05	.1496
.106	.172	.15	.1142
.141	.312	.28	.1063
.176	.574	.54	.1039
.212	.986	1.04	.0923
.247	1.547	1.84	.0816
.282	2.257	3.01	.0730
.317	3.116	4.59	.0661
.353	4.094	6.96	.0572
.388	5.081	9.97	.0495
.423	6.068	13.39	.0440

Q @ 1st grate =

$49.3 - \left(\frac{17}{25} \times 18.6\right) = 36.7$ cfs

JEWEL COVE

.458	7.056	17.21	.0399
.494	8.043	21.39	.0366
.529	9.031	25.92	.0339
.564	10.018	30.79	.0316
.599	11.005	35.98	.0297
.635	11.993	41.48	.0281
.670	12.980	47.29	.0267

$Q_{GRATE\ 2} = 36.7$

$dh = 0.6\,ft < 0.67$ [ok]

$E = \frac{\left(\frac{Q}{A}\right)^2}{64.4} + 0.6 = 0.77 < .97$ [ok]

ROUTE ID=13 HYD NO=105.1 INFLOW ID=12
TRAVEL TIME TABLE EXCEEDED
PRINT HYD ID=13 CODE=1

PARTIAL HYDROGRAPH 105.10

RUNOFF VOLUME = 1.66364 INCHES = 1.8012 ACRE-FEET
PEAK DISCHARGE RATE = 49.83 CFS AT 1.567 HOURS BASIN AREA = .0203 SQ. MI.

*
*
*
*COMPUTE HYDROGRAPH FOR BASINS B-3, THUNDER BASIN
COMPUTE NM HYD ID=3 HYD NO=106.3 DA=0.0106 SQ MI
%A=0.0 %B=25.0 %C=25.0 %D=50.0
TP=0.1333 HR
MASS RAINFALL=-1

K = .072649HR TP = .133300HR K/TP RATIO = .545000 SHAPE CONSTANT, N = 7.106420
UNIT PEAK = 20.925 CFS UNIT VOLUME = .9989 B = 526.28 P60 = 2.0700
AREA = .005300 SQ MI IA = .10000 INCHES INF = .04000 INCHES PER HOUR
RUNOFF COMPUTED BY INITIAL ABSTRACTION/INFILTRATION NUMBER METHOD - DT = .033333

K = .120467HR TP = .133300HR K/TP RATIO = .903729 SHAPE CONSTANT, N = 3.920589
UNIT PEAK = 13.910 CFS UNIT VOLUME = .9995 B = 349.84 P60 = 2.0700
AREA = .005300 SQ MI IA = .42500 INCHES INF = 1.04000 INCHES PER HOUR
RUNOFF COMPUTED BY INITIAL ABSTRACTION/INFILTRATION NUMBER METHOD - DT = .033333

PRINT HYD ID=3 CODE=1

PARTIAL HYDROGRAPH 106.30

RUNOFF VOLUME = 1.66364 INCHES = .9405 ACRE-FEET
PEAK DISCHARGE RATE = 26.33 CFS AT 1.500 HOURS BASIN AREA = .0106 SQ. MI.

*

```
*
*
*ROUTE DOWN THUNDER BASIN
*28' SECTION, S=0.6%
COMPUTE RATING CURVE CID=1  VS NO=1  NO SEGS=1  MIN ELEV=100.00
          MAX ELEV=100.67 CH SLP=0.006  FP SLP=0.006
          N=0.017  DIST=28.0
          00.0   100.67  0.0   100.00   2.0   100.13
          14.0   100.33 26.0   100.13  28.0   100.00
          28.0   100.67
```

RATING CURVE VALLEY SECTION 1.0

WATER SURFACE ELEV	FLOW AREA SQ FT	FLOW RATE CFS	TOP WIDTH FT
100.00	.00	.00	.00
100.04	.02	.01	1.09
100.07	.08	.05	2.17
100.11	.17	.16	3.26
100.14	.31	.31	5.33
100.18	.57	.59	9.56
100.21	.99	1.14	13.79
100.25	1.55	2.02	18.02
100.28	2.26	3.29	22.25
100.32	3.12	5.02	26.48
100.35	4.09	7.63	28.00
100.39	5.08	10.92	28.00
100.42	6.07	14.67	28.00
100.46	7.06	18.85	28.00
100.49	8.04	23.43	28.00
100.53	9.03	28.39	28.00
100.56	10.02	33.72	28.00
100.60	11.01	39.41	28.00
100.63	11.99	45.44	28.00
100.67	12.98	51.80	28.00

COMPUTE TRAVEL TIME ID=14 REACH NO=1 NO VS=1 L=700 SLP=0.006

TRAVEL TIME TABLE
REACH= 1.0

WATER DEPTH FEET	AVERAGE AREA SQ.FT.	FLOW RATE CFS	TRAVEL TIME HRS
.035	.019	.01	.4337
.071	.077	.05	.2732
.106	.172	.16	.2085
.141	.312	.31	.1941
.176	.574	.59	.1897
.212	.986	1.14	.1685
.247	1.547	2.02	.1490
.282	2.257	3.29	.1332
.317	3.116	5.02	.1206
.353	4.094	7.63	.1044
.388	5.081	10.92	.0904

.423	6.068	14.67	.0804
.458	7.056	18.85	.0728
.494	8.043	23.43	.0668
.529	9.031	28.39	.0618
.564	10.018	33.72	.0578
.599	11.005	39.41	.0543
.635	11.993	45.44	.0513
.670	12.980	51.80	.0487

$\frac{19}{27} \times 23.6\ cfs = 16.6\ cfs$

$\frac{\left(\frac{Q}{\Delta}\right)^2}{64.4} + .458 = .57$

ROUTE ID=14 HYD NO=105.1 INFLOW ID=3
PRINT HYD ID=14 CODE=1

PARTIAL HYDROGRAPH 105.10

RUNOFF VOLUME = 1.66367 INCHES = .9405 ACRE-FEET
PEAK DISCHARGE RATE = 23.65 CFS AT 1.533 HOURS BASIN AREA = .0106 SQ. MI.

*
*
*
*ADD HYDROGRAPH TO TOTAL
ADD HYD ID=15 HYD=206.0 ID I=14 ID II=13
PRINT HYD ID=15 CODE=1

PARTIAL HYDROGRAPH 206.00

RUNOFF VOLUME = 1.66361 INCHES = 2.7416 ACRE-FEET
PEAK DISCHARGE RATE = 73.41 CFS AT 1.567 HOURS BASIN AREA = .0309 SQ. MI.

*
*
*
*COMPUTE HYDROGRAPH FOR BASINS B-2
COMPUTE NM HYD ID=2 HYD NO=106.0 DA=0.0059 SQ MI
%A=0.0 %B=25.0 %C=25.0 %D=50.0
TP=0.1333 HR
MASS RAINFALL=-1

K = .072649HR TP = .133300HR K/TP RATIO = .545000 SHAPE CONSTANT, N = 7.106420
UNIT PEAK = 11.647 CFS UNIT VOLUME = .9984 B = 526.28 P60 = 2.0700
AREA = .002950 SQ MI IA = .10000 INCHES INF = .04000 INCHES PER HOUR
RUNOFF COMPUTED BY INITIAL ABSTRACTION/INFILTRATION NUMBER METHOD - DT = .033333

K = .120467HR TP = .133300HR K/TP RATIO = .903729 SHAPE CONSTANT, N = 3.920589
UNIT PEAK = 7.7422 CFS UNIT VOLUME = .9988 B = 349.84 P60 = 2.0700

AREA = .002950 SQ MI IA = .42500 INCHES INF = 1.04000 INCHES PER HOUR
RUNOFF COMPUTED BY INITIAL ABSTRACTION/INFILTRATION NUMBER METHOD - DT = .033333

PRINT HYD ID=2 CODE=1

PARTIAL HYDROGRAPH 106.00

RUNOFF VOLUME = 1.66365 INCHES = .5235 ACRE-FEET
PEAK DISCHARGE RATE = 14.66 CFS AT 1.500 HOURS BASIN AREA = .0059 SQ. MI.

```
*
*
*
*RATING CURVE AT WASTACH
*28' SECTION, S=0.6%
COMPUTE RATING CURVE CID=1 VS NO=1 NO SEGS=1 MIN ELEV=100.00
          MAX ELEV=100.67 CH SLP=0.006 FP SLP=0.006
          N=0.017 DIST=28.0
          00.0  100.67  0.0  100.00  2.0  100.13
          14.0  100.33 26.0  100.13 28.0  100.00
          28.0  100.67
```

RATING CURVE VALLEY SECTION 1.0

WATER SURFACE ELEV	FLOW AREA SQ FT	FLOW RATE CFS	TOP WIDTH FT
100.00	.00	.00	.00
100.04	.02	.01	1.09
100.07	.08	.05	2.17
100.11	.17	.16	3.26
100.14	.31	.31	5.33
100.18	.57	.59	9.56
100.21	.99	1.14	13.79
100.25	1.55	2.02	18.02
100.28	2.26	3.29	22.25
100.32	3.12	5.02	26.48
100.35	4.09	7.63	28.00
100.39	5.08	10.92	28.00
100.42	6.07	14.67	28.00
100.46	7.06	18.85	28.00
100.49	8.04	23.43	28.00
100.53	9.03	28.39	28.00
100.56	10.02	33.72	28.00
100.60	11.01	39.41	28.00
100.63	11.99	45.44	28.00
100.67	12.98	51.80	28.00

COMPUTE TRAVEL TIME ID=16 REACH NO=1 NO VS=1 L=300 SLP=0.006

TRAVEL TIME TABLE
REACH= 1.0

WATER DEPTH FEET	AVERAGE AREA SQ.FT.	FLOW RATE CFS	TRAVEL TIME HRS
.035	.019	.01	.1859
.071	.077	.05	.1171
.106	.172	.16	.0893
.141	.312	.31	.0832
.176	.574	.59	.0813
.212	.986	1.14	.0722
.247	1.547	2.02	.0639
.282	2.257	3.29	.0571
.317	3.116	5.02	.0517
.353	4.094	7.63	.0447
.388	5.081	10.92	.0388
.423	6.068	14.67	.0345
.458	7.056	18.85	.0312
.494	8.043	23.43	.0286
.529	9.031	28.39	.0265
.564	10.018	33.72	.0248
.599	11.005	39.41	.0233
.635	11.993	45.44	.0220
.670	12.980	51.80	.0209

d=0.423

Q @ 1st Grade = 60% x 14.36
= 8.62 cfs
d = .363 > .333
E = .363 + .06
= .423 < .533 [ok]

ROUTE ID=16 HYD NO=105.1 INFLOW ID=2
PRINT HYD ID=16 CODE=1

PARTIAL HYDROGRAPH 105.10

RUNOFF VOLUME = 1.66369 INCHES = .5235 ACRE-FEET
PEAK DISCHARGE RATE = 14.38 CFS AT 1.533 HOURS BASIN AREA = .0059 SQ. MI.

*
*
*
*TOTAL IN CHIRC AT WASTACH
*ADD HYDROGRAPH TO TOTAL
ADD HYD ID=17 HYD=206.0 ID I=16 ID II=15
PRINT HYD ID=17 CODE=1

PARTIAL HYDROGRAPH 206.00

RUNOFF VOLUME = 1.66361 INCHES = 3.2651 ACRE-FEET
PEAK DISCHARGE RATE = 86.86 CFS AT 1.567 HOURS BASIN AREA = .0368 SQ. MI.

*
*
*
*COMPUTE HYDROGRAPH FOR BASINS B-1, WOLF CREEK

```
COMPUTE NM HYD      ID=1  HYD NO=106.0  DA=0.0109 SQ MI
                %A=0.0  %B=25.0  %C=25.0  %D=50.0
                TP=0.1333 HR
                MASS RAINFALL=-1

     K =   .072649HR    TP =   .133300HR    K/TP RATIO =   .545000    SHAPE CONSTANT, N =
7.106420
     UNIT PEAK =   21.517    CFS   UNIT VOLUME =    .9989      B =   526.28      P60 = 2.0700
     AREA =      .005450 SQ MI    IA =    .10000 INCHES    INF =    .04000 INCHES PER HOUR
     RUNOFF COMPUTED BY INITIAL ABSTRACTION/INFILTRATION NUMBER METHOD - DT =
.033333


     K =   .120467HR    TP =   .133300HR    K/TP RATIO =   .903729    SHAPE CONSTANT, N =
3.920589
     UNIT PEAK =   14.303    CFS   UNIT VOLUME =    .9995      B =   349.84      P60 = 2.0700
     AREA =      .005450 SQ MI    IA =    .42500 INCHES    INF =   1.04000 INCHES PER HOUR
     RUNOFF COMPUTED BY INITIAL ABSTRACTION/INFILTRATION NUMBER METHOD - DT =
.033333

PRINT HYD          ID=1 CODE=1

                         PARTIAL HYDROGRAPH   106.00


     RUNOFF VOLUME =      1.66364 INCHES      =        .9671 ACRE-FEET
     PEAK DISCHARGE RATE =      27.07 CFS  AT   1.500 HOURS   BASIN AREA =   .0109 SQ. MI.


*
*
*
*RATING CURVE AT WOLF CREEK
*28' SECTION, S=0.6%
COMPUTE RATING CURVE CID=1  VS NO=1  NO SEGS=1  MIN ELEV=100.00
                MAX ELEV=100.67 CH SLP=0.006  FP SLP=0.006
                N=0.017  DIST=28.0
                00.0   100.67  0.0   100.00   2.0   100.13
                14.0   100.33 26.0   100.13  28.0   100.00
                28.0   100.67
```

RATING CURVE VALLEY SECTION 1.0

WATER SURFACE ELEV	FLOW AREA SQ FT	FLOW RATE CFS	TOP WIDTH FT
100.00	.00	.00	.00
100.04	.02	.01	1.09
100.07	.08	.05	2.17
100.11	.17	.16	3.26
100.14	.31	.31	5.33
100.18	.57	.59	9.56
100.21	.99	1.14	13.79
100.25	1.55	2.02	18.02

100.28	2.26	3.29	22.25
100.32	3.12	5.02	26.48
100.35	4.09	7.63	28.00
100.39	5.08	10.92	28.00
100.42	6.07	14.67	28.00
100.46	7.06	18.85	28.00
100.49	8.04	23.43	28.00
100.53	9.03	28.39	28.00
100.56	10.02	33.72	28.00
100.60	11.01	39.41	28.00
100.63	11.99	45.44	28.00
100.67	12.98	51.80	28.00

COMPUTE TRAVEL TIME ID=16 REACH NO=1 NO VS=1 L=300 SLP=0.006

TRAVEL TIME TABLE

REACH= 1.0

WATER DEPTH FEET	AVERAGE AREA SQ.FT.	FLOW RATE CFS	TRAVEL TIME HRS
.035	.019	.01	.1859
.071	.077	.05	.1171
.106	.172	.16	.0893
.141	.312	.31	.0832
.176	.574	.59	.0813
.212	.986	1.14	.0722
.247	1.547	2.02	.0639
.282	2.257	3.29	.0571
.317	3.116	5.02	.0517
.353	4.094	7.63	.0447
.388	5.081	10.92	.0388
.423	6.068	14.67	.0345
.458	7.056	18.85	.0312
.494	8.043	23.43	.0286
.529	9.031	28.39	.0265
.564	10.018	33.72	.0248
.599	11.005	39.41	.0233
.635	11.993	45.44	.0220
.670	12.980	51.80	.0209

$\frac{19}{33} \times 26.77 + 3 \doteq 18.4$ cfs
+ 3 cfs from
ARCVIEW/Tony Sanchez

dn = .458

$E = \frac{\left[\frac{Q}{A}\right]^2}{64.4} + .458 = 0.569$

ROUTE ID=18 HYD NO=105.1 INFLOW ID=1

PRINT HYD ID=18 CODE=1

PARTIAL HYDROGRAPH 105.10

RUNOFF VOLUME = 1.66367 INCHES = .9671 ACRE-FEET

PEAK DISCHARGE RATE = 26.77 CFS AT 1.533 HOURS BASIN AREA = .0109 SQ. MI.

*

*

*TOTAL IN CHIRC AT WOLF CREEK

*ADD HYDROGRAPH TO TOTAL

AVIC ENGINEERING, INC.

REVISED INLET ANALYSIS – CHIRICAHUA ST.

Q DESIGN = 116 cfs

REVISE CURRENT DESIGN BY a) APPLYING CLOGGING FACTOR, and

b) ACCOUNT FOR CURB OPENING STRUCTURAL MEMBERS.

$$Q_{GRATE} = f \times C \times P \times H^{3/2}$$

$$0.8 \times \underbrace{3.0}_{\text{CLOGGING FACTOR OF 20\%}} \times \underbrace{16'}_{\text{EFFECTIVE WEIR PERIMETER}} \times \underbrace{H^{3/2}}_{\text{DEPTH OF PONDING OVER GRATE}}$$

$$Q_{CURB\ OPENING} = C \times A \times H^{1/2}$$ (SEE NOMOGRAPH)

$Q_{COMBINED} = 116.1$ cfs @ $d = 1.55$ ft

ELEV. = 86.8 + 1.55 = 88.35 vs 90°

FREEBOARD @ 2x100YR WSEL = 1.65 ft

depth over grate increases from 1.4 ft to 1.55 ft.

PROJECT NAME Wilson Woods, Unit 5 SHEET 1 OF 2

PROJECT NO. BY DATE 4/15/96

SUBJECT Supplemental Analysis CH'D DATE

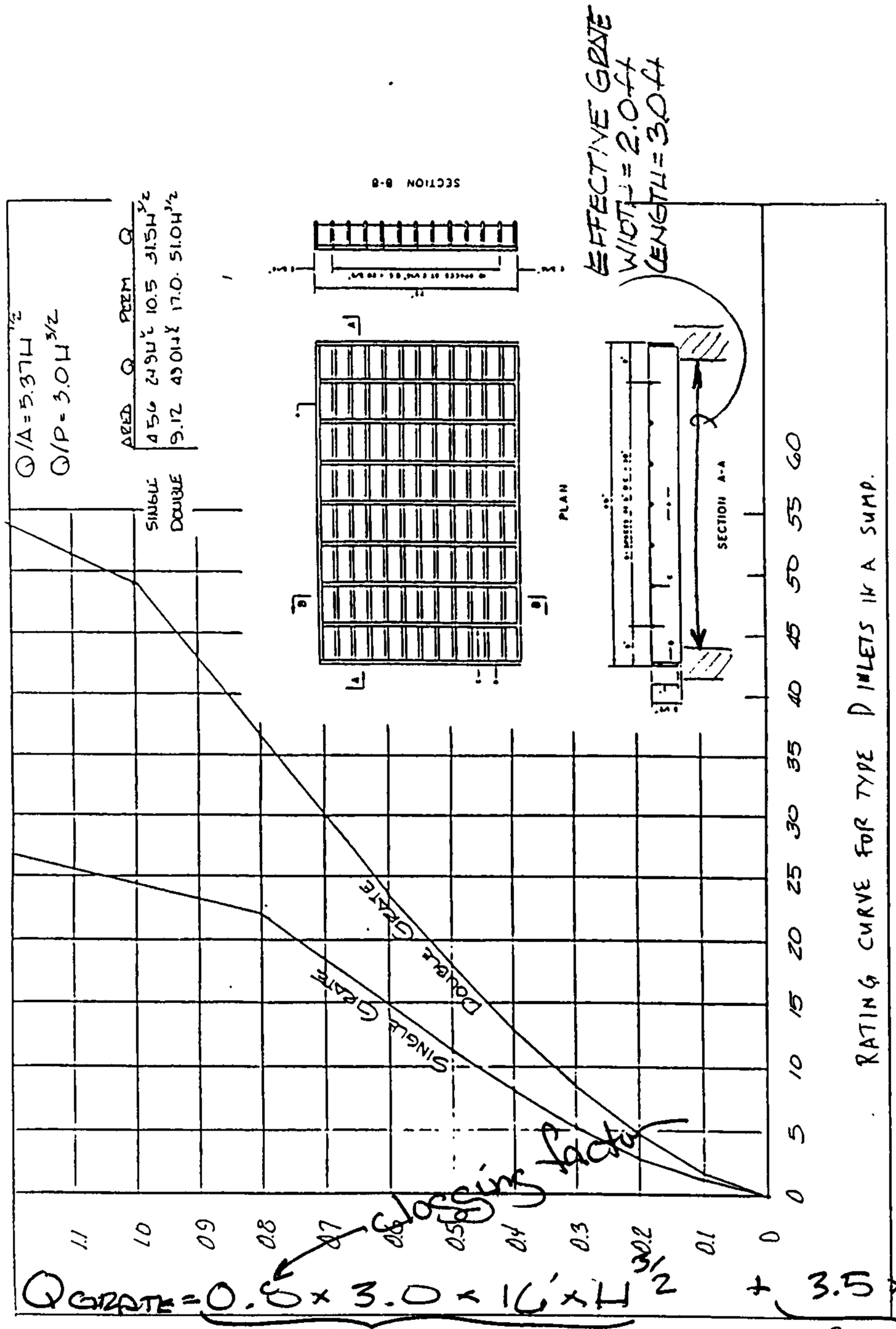

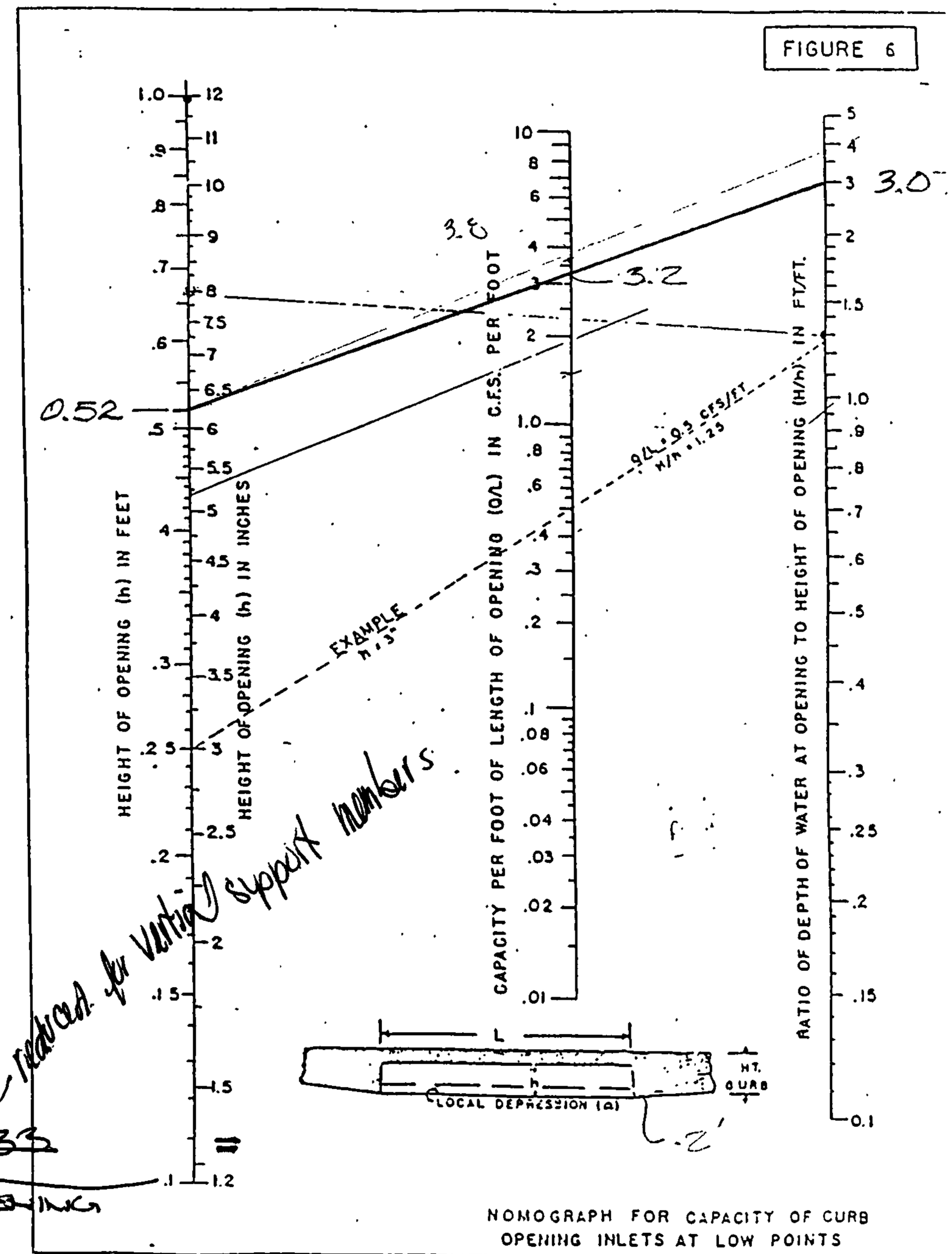

clogging factor

12', reduced for vertical support members

$Q_{GRATE} = \underbrace{0.6 \times 3.0 \times 16' \times H^{3/2}}_{GRATE} + \underbrace{3.5 \times \cancel{13.33}}_{CURB\ OPENING}$ 12'

$Q_{GRATE} = P \times 3.0 \times H^{3/2}$ @ Q_{CURB} TYPE 'C' INLET

$= (2 \times 2' + 16/3') \times 3.0 \times 1.4^{3/2}$ d = 1.4'

$h = 6\frac{1}{4}$ in. $= 0.52$ ft $H = 1.4' + .2$ ft $= 1.6$ ft

$H/h = 3.07$ $Q/L = 3.2$ $Q = 3.2 \times 12$ ft $= 38$ cfs

$Q_{TOTAL} = 74 + 42 = 116.1$ [ok] @ d = 1.55 ft

DRAINAGE INFORMATION SHEET

PROJECT TITLE: Willow Wood Subdivision Unit 5 ZONE ATLAS/DRAINAGE FILE # L-21/D37A2

LEGAL DESCRIPTION: Tract D-1, Manzano Mesa

CITY ADDRESS: West of Juan Tabo, North of Gibson

ENGINEERING FIRM: AVID ENGINEERING, INC. CONTACT: Rick Beltramo

ADDRESS: 6100 Seagull Ln., NE, Suite 102, 87109 PHONE: 881-5357

OWNER: Manzano Mesa Limited Partnership CONTACT: Stan Strickman

ADDRESS: 6301 Indian School, NE, Suite 208 PHONE: 242-6375

ARCHITECT: None CONTACT: ____

ADDRESS: ____ PHONE: ____

SURVEYOR: AVID ENGINEERING, INC. CONTACT: Ruan Bacigalupa

ADDRESS: Same as Above PHONE: 881-5357

CONTRACTOR: None CONTACT: ____

ADDRESS: ____ PHONE: ____

PRE-DESIGN MEETING:

X YES

____ NO

____ COPY OF CONFERENCE RECAP SHEET PROVIDED

DRB NO. DRB-92-0106

EPC NO. ____

PROJECT NO. 4604.90-94

TYPE OF SUBMITTAL:

X DRAINAGE REPORT

____ DRAINAGE PLAN

____ CONCEPTUAL GRADING & DRAIN PLAN

____ GRADING PLAN

____ EROSION CONTROL PLAN

____ ENGINEER'S CERTIFICATION

CHECK TYPE OF APPROVAL SOUGHT:

____ SECTOR PLAN APPROVAL

____ SKETCH PLAT APPROVAL

____ PRELIMINARY PLAT APPROVAL

____ SITE DEVELOPMENT PLAN APPROVAL

____ FINAL PLAT APPROVAL

____ BUILDING PERMIT APPROVAL

____ FOUNDATION PERMIT APPROVAL

____ CERTIFICATE OF OCCUPANCY APPROVAL

____ ROUGH GRADING PERMIT APPROVAL

____ GRADING/PAVING PERMIT APPROVAL

XX OTHER W.O. (SPECIFY)

APR - 5 1996
HYDROLOGY DIVISION

DATE SUBMITTED: 3/27/96

BY: [signature]

REV. 10/85

4C Inlet on Chiricahua

$A_g = 4.2(4).50 = 8.4\ sf$

$P = 1 + 13.5 + 1 = 15.5'$

@ d = .9' (Top of Curb)

$Q_w = 3.0(15.5')(.9')^{1.5} = 40\ cfs$ *

$Q_o = .67(8.4)\sqrt{64.4(.9)} = 43\ cfs$

@ d = 1.2' do = 0.95' (@ ℄)

$Q = 0.67(8.4)\sqrt{64.4(1.2)} + 0.67(.5)13.5\sqrt{64.4(.95)}$

$49.5 + 35.4 = 85\ cfs$

@ d = 1.4' do = 1.15'

$Q = 53.4 + 38.9 = 92\ cfs$

@ d = 2.0' do = 1.75'

$Q = 63.9 + 48.0 = 112\ cfs$

@ d = 2.2' do = 1.95' (1' above ℄)

$Q = 67.0 + 50.7 = 118\ cfs$

City of Albuquerque
P.O. BOX 1293 ALBUQUERQUE, NEW MEXICO 87103

November 8, 1995

Rick Beltramo, PE
AVID Engineering, Inc.
5801 Osuna NE Suite 200
Albuquerque, NM 87109

RE: GRADING PLAN FOR WILLOW WOOD UNIT 5 (L-21/D37A2)
RECEIVED OCTOBER 26, 1995 FOR ROUGH GRADING PERMIT
ENGINEER'S STAMP DATED 10/24/95

Dear Mr. Beltramo:

Based on the information included in the submittal referenced above, City Hydrology approves a Rough Grading Permit for Unit 5. Written permission must be obtained from any adjacent property owner before any grading of their property.

If you have any questions about this project, You may contact me at 768-2727.

Sincerely,

John P. Curtin

John P. Curtin, P.E.
Civil Engineer, Hydrology

c: Andrew Garcia
Larry Caudill, Environmental Health
Stan Strickman, Manzano Mesa, 6301 Indian School NE Suite 208, 87110

THE CITY OF ALBUQUERQUE IS AN EQUAL OPPORTUNITY/REASONABLE ACCOMMODATION EMPLOYER

DRAINAGE INFORMATION SHEET

PROJECT TITLE: Willow Wood Subdivision, Unit 5 ZONE ATLAS/DRAINAGE FILE # L-21/D37A

LEGAL DESCRIPTION: Tract D-1, Manzano Mesa

CITY ADDRESS: West of Juan Tabo, North of Gibson

ENGINEERING FIRM: AVID ENGINEERING, INC. CONTACT: Rick Beltramo

ADDRESS: 6100 Seagull Ln., NE, Suite 102, 87109 PHONE: 881-5357

OWNER: Manzano Mesa Limited Partnership CONTACT: Stan Strickman

ADDRESS: 6301 Indian School, NE, Suite 208 PHONE: 242-6375

ARCHITECT: None CONTACT:

ADDRESS: PHONE:

SURVEYOR: AVID ENGINEERING, INC. CONTACT: Ruan Bacigalupa

ADDRESS: Same as Above PHONE: 881-5357

CONTRACTOR: None CONTACT:

ADDRESS: PHONE:

PRE-DESIGN MEETING:

X YES DRB NO. DRB-92-0106

___ NO EPC NO.

___ COPY OF CONFERENCE RECAP SHEET PROVIDED PROJECT NO. 4604.90-93

TYPE OF SUBMITTAL:

___ DRAINAGE REPORT

___ DRAINAGE PLAN

XX CONCEPTUAL GRADING & DRAIN PLAN

XX GRADING PLAN

___ EROSION CONTROL PLAN

___ ENGINEER'S CERTIFICATION

CHECK TYPE OF APPROVAL SOUGHT:

___ SECTOR PLAN APPROVAL

___ SKETCH PLAT APPROVAL

___ PRELIMINARY PLAT APPROVAL

___ SITE DEVELOPMENT PLAN APPROVAL

___ FINAL PLAT APPROVAL

___ BUILDING PERMIT APPROVAL

___ FOUNDATION PERMIT APPROVAL

___ CERTIFICATE OF OCCUPANCY APPROVAL

XX ROUGH GRADING PERMIT APPROVAL

___ GRADING/PAVING PERMIT APPROVAL

___ OTHER _____ (SPECIFY)

DATE SUBMITTED: 10/25/95.

BY: Rick Beltramo

RECEIVED OCT 26 1995

AVID ENGINEERING, INC.
Civil • Structural • Transportation
5801 Osuna Rd. NE • Suite 200 • Albuquerque, NM 87109
(505) 881-5357 • Fax 505-881-7602

LETTER OF TRANSMITTAL

TO: John Curtain City Hydrologist 3rd Floor, City/County Bldg.	DATE: 10/25/95 PROJECT: Willowood 5 PROJECT NO.:
ATTN:	
RE: Rough Grade Permit	

WE ARE SENDING:

QTY.	DESCRIPTION	FOR
2	sets Blue Lines	Your Review
1	set Mylars, for insertion	Your Review
	into W.O. plans	
1	Drainage Info Sheet	Your Information

REMARKS: John, as we discussed, we have revised the plans to show ex. ground contours.

We have also modified the grading detail to meet the 2:1 max. slope requirement per the DPM. This is an interim condition until permanent sideyard walls are constructed.

Please review, and if possible approve for rough grading.

BY: [signature]

RECEIVED: D. Lopez OCT 26 DATE: 10/26/95

If enclosures are not as noted, kindly notify us at once.

AVID ENGINEERING, INC.
Civil • Structural • Transportation
5801 Osuna Rd. NE • Suite 200 • Albuquerque, NM 87109
(505) 881-5357 • Fax 505-881-7602

LETTER OF TRANSMITTAL

TO: John Curtin City Hydrologist 3rd Floor City/County Bldg.	DATE: 10/23/95 PROJECT: Willow Wood Unit 5 PROJECT NO.:
ATTN:	
RE: L-21/D37A2	

WE ARE SENDING:

QTY.	DESCRIPTION	FOR
2 sets	Revised Rough Grading Permits	

REMARKS: John, These are the responses to your comments to the rough grading application, received Oct 19, 1995.

1) "The dark shaded strip" represents sidewalk, and is further noted.
2) The contractor has been supplied a) interior contours and our earthwork computations. The contours were replotted to show heavier.
3) Note 1 has been revised adding "except for interim sideyard grades". Construction of the sideyard garden walls will complete the construction and eliminate any slopes steeper than 4:1. If this is not acceptable, please let me know and we will revise the sideyard detail.
4) The city spec. 1012 is used in full.

BY: [signature]

RECEIVED: Valerie Hunter DATE: 10-23-95

Must show existing Contours On-site.

If enclosures are not as noted, kindly notify us at once.

City of Albuquerque

P.O. BOX 1293 ALBUQUERQUE, NEW MEXICO 87103

October 12, 1995

Rick Beltramo, PE
AVID Engineering, Inc.
5801 Osuna NE Suite 200
Albuquerque, NM 87109

RE: GRADING PLAN FOR WILLOW WOOD UNIT 5 (L-21/D37A2)
RECEIVED SEPTEMBER 28, 1995 FOR ROUGH GRADING PERMIT
ENGINEER'S STAMP DATED 9/26/95

Dear Mr. Beltramo:

Based on the information included in the submittal referenced above, City Hydrology has the following comments:

What does the dark shaded strip next Arches Road represent? There are no existing contours within the site. How will the Contractor determine how much cut or fill is required? The existing contours outside the site are so faint that the reviewer can only determine how the proposed grading fits with the adjacent property on the east side where there are existing spot elevations.

Note 1 of the Erosion Control Plan states that "slopes shall not exceed 4:1". The swales in the Sideyard Grading Detail require a 2:1 slope. Also this detail must indicate the condition that the Engineer will certify.

Update #4 created Spec Section 1012 "Native Seeding". The seed mix proposed does not match 1012.4.1.1. Is Note 9 based on an obsolete spec?

If you have any questions about this project, You may contact me at 768-2727.

Sincerely,

John P. Curtin

John P. Curtin, P.E.
Civil Engineer, Hydrology

c: Andrew Garcia
Stan Strickman, Manzano Mesa, 6301 Indian School NE Suite 208, 87110

DRAINAGE INFORMATION SHEET

PROJECT TITLE: Willow Wood Subdivision, UNIT 5 ZONE ATLAS/DRAINAGE FILE # L-21/D37A 2

LEGAL DESCRIPTION: Tract D-1, Manzano Mesa

CITY ADDRESS: West of Juan Tabo, North of Gibson

ENGINEERING FIRM: AVID ENGINEERING, INC. CONTACT: Rick Beltramo

ADDRESS: ~~6100 Seagull Ln., NE, Suite 102, 87109~~ 5801 Osuna NE Suite 200 PHONE: 881-5357

OWNER: Manzano Mesa Limited Partnership CONTACT: Stan Strickman

ADDRESS: 6301 Indian School, NE, Suite 208 PHONE: 242-6375

ARCHITECT: None CONTACT:

ADDRESS: PHONE:

SURVEYOR: AVID ENGINEERING, INC. CONTACT: Ruan Bacigalupa

ADDRESS: Same as Above PHONE: 881-5357

CONTRACTOR: None CONTACT:

ADDRESS: PHONE:

PRE-DESIGN MEETING:

____ YES DRB NO. DRB-92-0106

____ NO EPC NO.

____ COPY OF CONFERENCE RECAP SHEET PROVIDED PROJECT NO. 4604.90-93

TYPE OF SUBMITTAL:

____ DRAINAGE REPORT

____ DRAINAGE PLAN

____ CONCEPTUAL GRADING & DRAIN PLAN

X GRADING PLAN

____ EROSION CONTROL PLAN

____ ENGINEER'S CERTIFICATION

CHECK TYPE OF APPROVAL SOUGHT:

____ SECTOR PLAN APPROVAL

____ SKETCH PLAT APPROVAL

____ PRELIMINARY PLAT APPROVAL

____ SITE DEVELOPMENT PLAN APPROVAL

____ FINAL PLAT APPROVAL

____ BUILDING PERMIT APPROVAL

____ FOUNDATION PERMIT APPROVAL

____ CERTIFICATE OF OCCUPANCY APPROVAL

XX ROUGH GRADING PERMIT APPROVAL

____ GRADING/PAVING PERMIT APPROVAL

____ OTHER _____ (SPECIFY)

DATE SUBMITTED: 9/28/95

BY: James Domenick

SEP 2 8 1995

REV. 10/85

AVID ENGINEERING, INC.
Civil • Structural • Transportation
5801 Osuna Rd. NE • Suite 200 • Albuquerque, NM 87109
(505) 881-5357 • Fax 505-881-7602

LETTER OF TRANSMITTAL

TO: John Curtin	DATE: 9/20/95
COA- HYDROLOGY	PROJECT: WILLOWWOOD UNIT 5
City/County 3rd Floor.	
	PROJECT NO.: 5054.53 Corr. File
ATTN:	
RE: ROUGH GRADING PERMIT- L-21/D37	

WE ARE SENDING:

QTY.	DESCRIPTION	FOR
2 sets	Blue Lines	Review
1 sets	REPRODUCIBLES	Review
1	drainage information Sheet	Your Info.

REMARKS: John, please review and approve this rough grading plan. We would like to ~~start~~ rough grading/mass grading within a few weeks.

please sign all copies and retain one copy for your files.

BY: [signature]

RECEIVED: A. Lopez

DATE: SEP 28 1995

If enclosures are not as noted, kindly notify us at once.

FIGURE 6

Revised Lot Lines

CITY OF ALBUQUERQUE
NOTICE OF D.R.C. MEETING

9-15-95
(DATE)

PROJECT NO: 4604.94
ZONE ATLAS: L-21

PROJECT NAME: Willowwood Subd Unit 5
LOCATION:

TYPE OF PROJECT: AHBA ✓ CIP ___ PWC ___ SAD ___ ALL PRIVATE ___

Contact Person: Rick Beltramo Phone: 881-5357
Firm: Avid Engr.

X Scheduled with the D.R.C. on 9-20-95 at 1:30 in Conf. Room 302
___ No DRC Meeting Scheduled. Please return any comments by ___

The Project Is Scheduled For:
/ / Design Report Review
/ / Pre-Design Meeting
/ / Preliminary Plan Review
/X/ Final Plan Review (Approved Infra. List)
/ / Signoff of Plans (Mylars Required)
/ / ___

The Project Relates To:
/✓/ Water /✓/ San. Sewer /✓/ Paving /✓/ Storm Drainage / / ___

The Attached Package Includes:
/D/ Drawings /S/ Spec's /E/ Estimate /R/ Report /M/ Memo Only

Indicated below are the Departments/Divisions that have received project documents and/or are invited to attend. It will be the Project Managers responsiblity to notify consulting engineering firms of date and time of scheduled meetings.

/D/ DRC Chairman	Project Review Section	All
/D/ Traffic Repres	Transportation Development	All
/D/ Water Repres.	Utility Design	All
/D/ Hydro Repres. CURTIN	Hydrology	All
/D/ Const. Repres.	Construction	All
/ / Bill Coleman	Traffic Operations	
/ / Dick Salas	Street Maintenance	
/ / Sergio Miranda	Water (Shutoff Plan)	ALL WATER SHUTOFF
/ / Diane Scena	Parks & Recreation	ALL LANDSCAPING
/ /	Utility Coordinator	ALL PWC & CIP
/ / Jim Hamel	Transit Department	CIP/Memo
/ / Rick Roybal	Construction Coordinator	CIP/Memo
/ / Jim Fink	Line Maintenance	CIP-SAS/Memo
/ / Joe Dellalonga	City Architect	ARCHITECTURAL
/ / Lee Lunsford	SAD Engineer	SAD/Memo
/ / Joe Luehring	Transportation Develop.	CIP/Memo
/ / Roger Green	Utility Design	CIP/WATER & SAS
/ / Mike Minturn	General Services Dept.	BUILDINGS
/ / Greg Smith	PWD/Legal	DWGS & SPECS
/ / Richard Sertich	Planning Department	CIP/Memos
/ / CIP Manager	CIP	CIP/Memos
/ / ___	___	___
/ / ___	___	___

RG/tm (WP+123400) Rev. 11/05/91

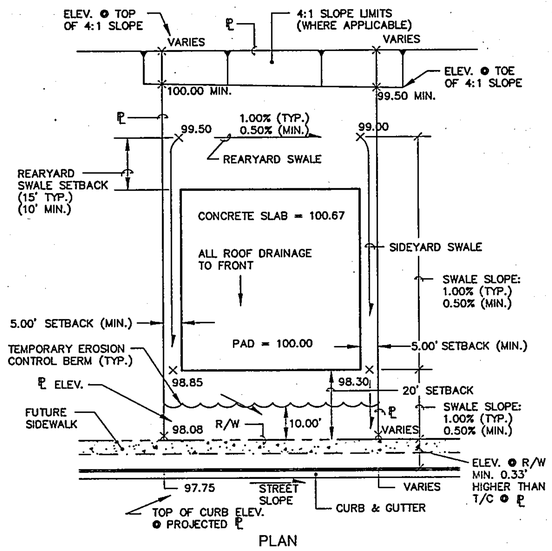

PLAN

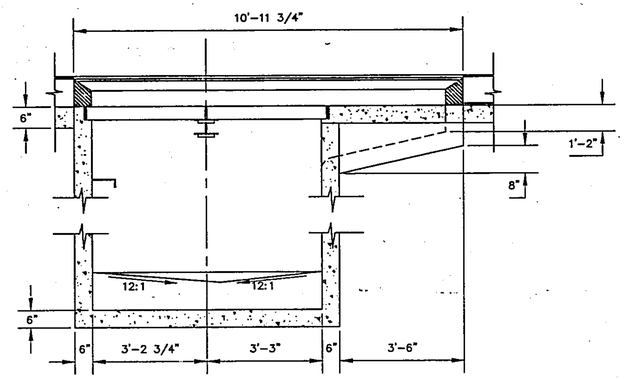

STORM INLET DOUBLE "A"

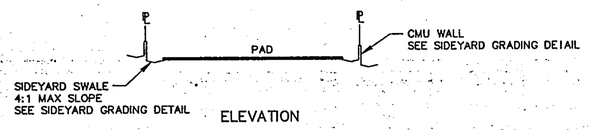

ELEVATION

TYPICAL LOT GRADING DETAIL

SCALE: 1"=20'

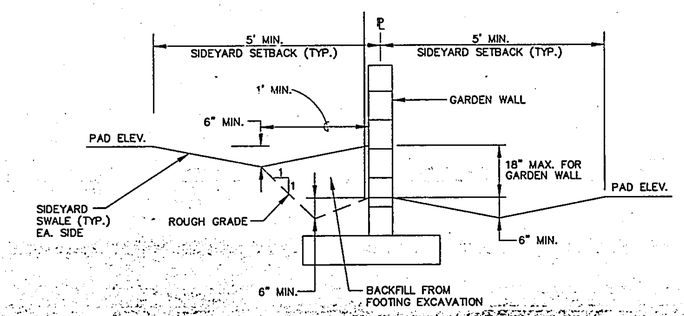

SIDEYARD GRADING DETAIL

NTS

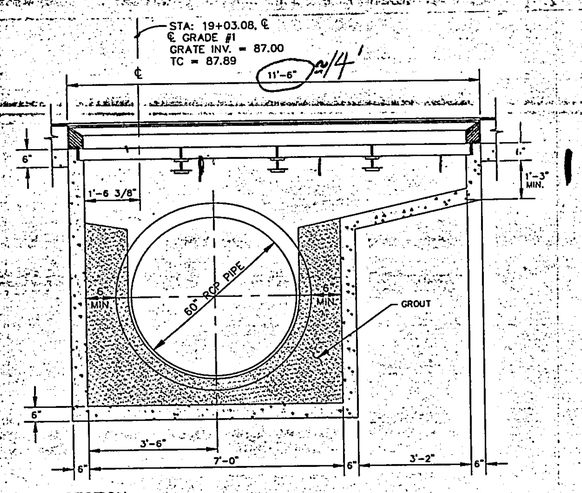

SECTION

QUADRUPLE "C" MODIFIED CATCH BASIN △1

NO SCALE

EROSION CONTROL PLAN

1. SLOPES SHALL NOT EXCEED 4:1.

2. THE CONTRACTOR MUST OBTAIN A TOPSOIL DISTURBANCE PERMIT FROM THE ENVIRONMENTAL HEALTH DIVISION PRIOR TO COMMENCING CONSTRUCTION.

3. THE CONTRACTOR IS TO REFER TO EARTHWORK SPECIFICATIONS AS NOTED IN THE SOILS REPORT SUPPLIED BY CURB INC.

4. THE CONTRACTOR SHALL CONFORM TO ALL CITY, COUNTY, STATE AND FEDERAL DUST CONTROL MEASURES AND REQUIREMENTS AND WILL BE RESPONSIBLE FOR PREPARING AND OBTAINING ALL NECESSARY APPLICATIONS AND APPROVALS.

5. THE CONTRACTOR SHALL ENSURE THAT NO SOIL ERODES FROM THE CONSTRUCTION SITE. EROSION CONTROL MEASURES ARE INTENDED TO CONTROL MINOR FLOWS AND PROHIBIT THE RELEASE OF SEDIMENT INTO ADJACENT STREETS AND PROPERTY. EROSION CONTROL AND DIVERSION BERMS SHALL BE CONSTRUCTED IN ACCORDANCE WITH THE DETAIL SHOWN ON THIS SHEET, AT LOCATIONS SHOWN ON THE GRADING PLAN.

6. THE CONTRACTOR IS RESPONSIBLE FOR MAINTAINING TEMPORARY BERMS THROUGHOUT THE CONSTRUCTION PHASE. THE OWNER WILL MAINTAIN BERMS AFTER COMPLETION AND ACCEPTANCE OF CONSTRUCTION.

7. TEMPORARY EROSION CONTROL BERMS LOCATED ON INDIVIDUAL LOTS SHALL REMAIN IN PLACE UNTIL THE CONSTRUCTION OF EACH RESPECTIVE BUILDING IS COMPLETE, ON A LOT BY LOT BASIS.

8. THE TOLERANCES FOR ROUGH GRADING SHALL CONFORM TO THE FOLLOWING:

PAD SUBGRADE:	+/- 0.2'
STREET SUBGRADE:	+/- 0.2'
ALL OTHER AREAS:	+/- 0.5'

9. THE CONTRACTOR SHALL REVEGETATE AND RE-ESTABLISH ALL AREAS WHICH ARE DISTURBED BY SITE GRADING AND ARE NOT TO RECEIVE PERMANENT SURFACE TREATMENTS. SPECIFICATIONS FOR SEEDING SHALL BE PER CITY OF ALBUQUERQUE STANDARD SPECIFICATIONS FOR PUBLIC WORKS CONSTRUCTION, LATEST EDITION, SECTION 1011, NATIVE SEEDING CLASS A.

OPERATION SHALL CONSIST OF PROTECTION OF SITE PREPARATION OF SEEDBED, MULCHING, FERTILIZATION, AND THE PROVISION OF MATERIALS, LABOR, AND EQUIPMENT NECESSARY TO PERFORM THE OPERATION. THE SEED MIX SHALL BE AS DENOTED IN THE LIST BELOW.

SEED TYPE	LBS. PLS PER ACRE
GRASSES	
INDIAN RICE(10%) GRASS	15 LBS.
GALLETA GRASS(30%) 'VIVA'	3.5 LBS.
SIDE OATS(20%) GRAMA	2 LBS.
SAND(10%) DROPSEED	1 LB.
BLUE GRAMA(30%) 'HACHITA'	2 LBS.
WILD FLOWERS	
TAHOKA DAISY	1 LB.
YELLOW CONEFLOWER	1 LB.
GALLARDIA	1 LB.

LOT GRADING GENERAL NOTES:

1. LOT GRADING SHALL MEET THE SITE GRADING AND DRAINAGE CRITERIA FOR PROPOSED CONSTRUCTION AS SET FORTH BY THE DEPARTMENT OF HOUSING AND URBAN DEVELOPMENT – FEDERAL HOUSING ADMINISTRATION IN CIRCULAR LETTER NO. 91-1, OFFICE OF THE MANAGER, ALBUQUERQUE, NEW MEXICO, DATED 1/25/91.

2. ELEVATION OF HIGHPOINT OF REARYARD SWALE SHALL BE MIN. OF 6" BELOW PAD ELEVATION.

3. FINISHED FLOOR ELEVATIONS (NOT SHOWN) SHALL BE 8" ABOVE PAD ELEVATIONS (SHOWN).

4. FRONT YARD SIDEWALK SLOPE SHALL NOT EXCEED 10%.

5. DRIVEWAY SLOPE SHALL NOT EXCEED 14%. IF DRIVEWAY IS USED AS SIDEWALK, MAX-SLOPE SHALL NOT EXCEED 10%.

6. THE CONTRACTOR IS FULLY RESPONSIBLE FOR FIELD VERIFYING ALL EXISTING UTILITIES AND NOTIFYING THE ENGINEER IMMEDIATELY OF ANY DISCREPANCIES. CAUTION SHALL BE EXERCISED WHEN WORKING IN THE VICINITY OF EXISTING UTILITIES. ANY DAMAGE TO EXISTING UTILITIES RESULTING FROM CONSTRUCTION ACTIVITIES WILL BE REPAIRED BY THE CONTRACTOR AT THE CONTRACTOR'S EXPENSE.

7. GRADE ELEVATIONS, WHERE NOTED, ARE FOR TOP OF STANDARD CURB UNLESS OTHERWISE SPECIFIED.

8. CONTRACTOR IS RESPONSIBLE FOR REPAIR AND/OR REPLACEMENT OF ALL UTILITY CONDUITS AND EXISTING LINES.

9. ANY DAMAGE TO THE EXISTING FACILITIES (CURB AND GUTTER, PAVEMENT, CONDUITS, LANDSCAPING, UTILITY LINES, ETC.) DURING CONSTRUCTION SHALL BE REPLACED AT THE CONTRACTORS EXPENSE.

AS BUILT INFORMATION

	CONTRACTOR	DATE
WORK STAKED BY		
INSPECTOR'S ACCEPTANCE BY		DATE
FIELD VERIFICATION BY		DATE
DRAWINGS CORRECTED BY		DATE

MICRO-FILM INFORMATION

RECORDED BY DATE

NO.

BENCH MARKS

THE STATION MARK IS A STANDARD ACS BRASS TABLET, STAMPED "1-L21 RESET 1974," LOCATED 7.8 MILES EAST OF DOWNTOWN ALBUQUERQUE, AT THE INTERSECTION OF CENTRAL AVE. AND JUAN TABO BLVD. THE STATION IS ON THE MEDIAN STRIP OF CENTRAL AVE., 81' WEST OF THE CENTERLINE OF JUAN TABO BLVD. AND FLUSH WITH THE TOP OF CURB. SLD ELEV. 5534.63

SURVEY INFORMATION

FIELD NOTES

NO.	BY	DATE

ENGINEER'S SEAL

N. DONALD JAMES NEW MEXICO 7845 REGISTERED PROFESSIONAL ENGINEER

NO.	DATE	REV.	BY
1	9-19-94	DRAINAGE INLET	RB

REMARKS

DESIGN

DESIGNED BY DA DATE 11/94

DRAWN BY RAVJ DATE 11/94

CHECKED BY JD DATE 11/94

AVID ENGINEERING, INC.
Civil • Structural • Transportation
6100 Seagull St. NE – Suite 102
Albuquerque, NM 87109 – (505) 881-5357

CITY OF ALBUQUERQUE
PUBLIC WORKS DEPARTMENT
ENGINEERING GROUP

TITLE: WILLOW WOOD UNIT IV
GRADING DETAILS

APPROVALS	ENGINEER	DATE	APPROVALS	ENGINEER	DATE
D.R.C. Chair			Water		
Transportation	N/A	9-20-95	Waste Water		10/23/95
Hydrology					

DRAWING NO.	MAP NO.	SHEET	OF
4604.93	L-21-Z	7	24

D:\WILLOW\WOSSIGROOTL Wed Sep 13 10:48:43 1995

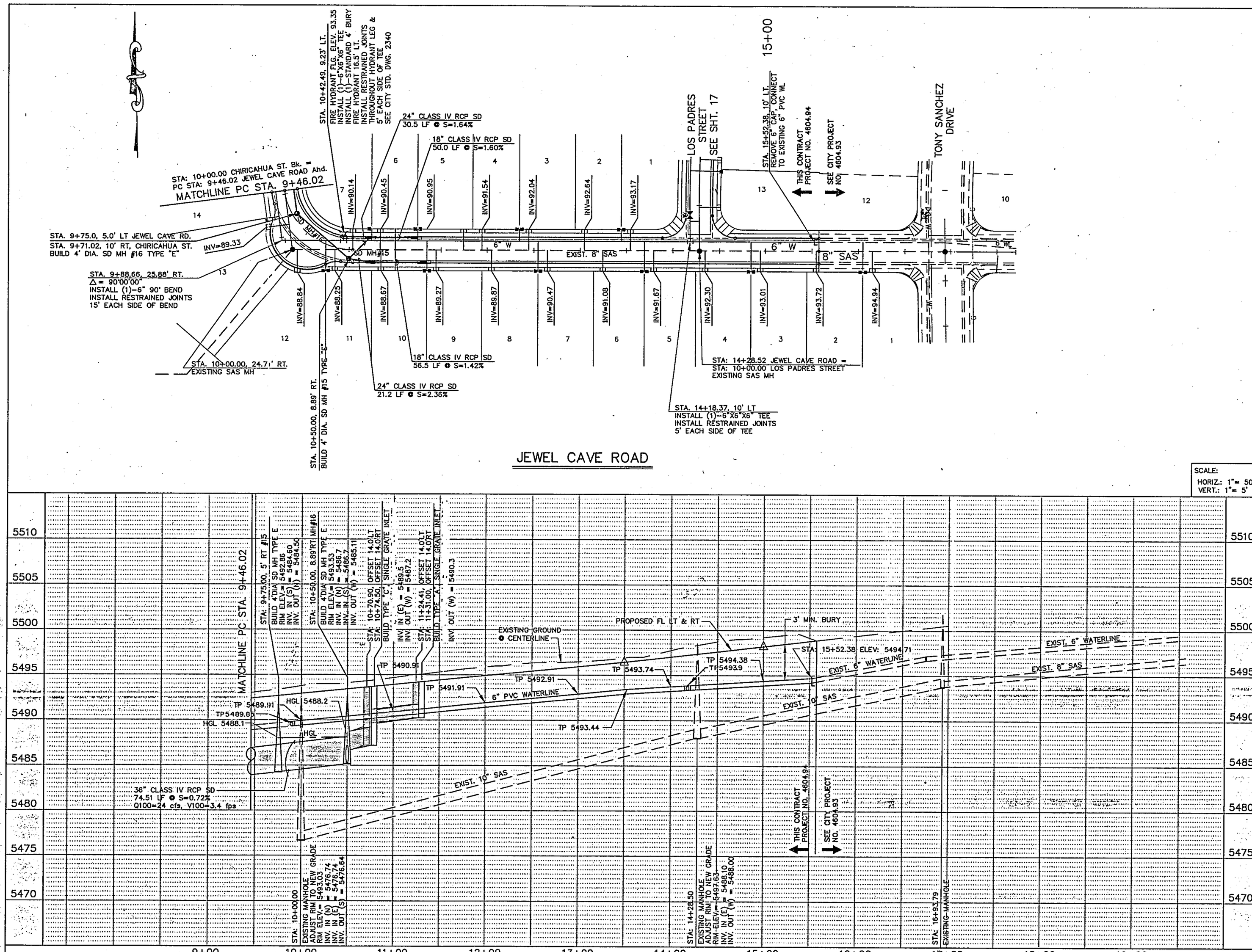

JEWEL CAVE ROAD

SCALE:
HORIZ.: 1"= 50'
VERT.: 1"= 5'

WILLOW\DWGS5\UT-JEW.DWG

UTILITY NOTES

1.) STATIONING ALONG ℄ OF STREET UNLESS OTHERWISE NOTED.

2.) SANITARY SEWER LINE LENGTHS COMPUTED FROM MH ℄ TO MH ℄.

3.) SLOPES ARE COMPUTED INVERT TO INVERT. MH RIM ELEVATIONS GIVEN ARE APPROXIMATE. CONTRACTOR SHALL ADJUST ALL RIMS TO FINAL GRADE.

4.) CONTRACTOR IS RESPONSIBLE FOR COORDINATION WITH UTILITY COMPANIES.

5.) CONTRACTOR SHALL VERIFY ALL EXISITING UTILITIES AND UTILITY CONNECTIONS PRIOR TO BEGINNING CONSTRUCTION. SHOULD A CONFLICT EXIST OR DESIGN REVISIONS BE REQUIRED FOR ANY REASON, THE CONTRACTOR SHALL NOTIFY THE ENGINEER AND ALLOW SUFFICIENT TIME FOR DESIGN REVISIONS SO AS TO NOT DELAY THE CONSTRUCTION SCHEDULE.

LEGEND

—W—	EXISTING WATERLINE
—SD—	EXISTING STORM DRAIN
—SAS—	EXISTING SANITARY SEWER
○	EXISTING MANHOLE
	EXISTING FIRE HYDRANT
	EXISTING GATE VALVE
W	PROPOSED WATERLINE
SD	PROPOSED STORM DRAIN
SAS	PROPOSED SANITARY SEWER
●	PROPOSED MANHOLE
	PROPOSED FIRE HYDRANT
	PROPOSED GATE VALVE
	PROPOSED CAP OR PLUG
	PROPOSED SINGLE METER, WATER SERVICE LINE
	PROPOSED DOUBLE METER, WATER SERVICE LINES
	PROPOSED SANITARY SEWER SERVICE LINE
	PROPOSED CROSS, TEE, OR ELBOW
	PROPOSED STORM INLET

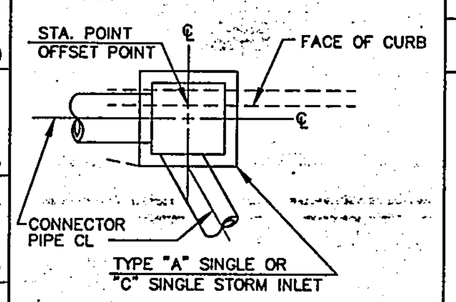

TYPICAL INLET LOCATION DETAIL

AVID ENGINEERING, INC.
Civil • Structural • Transportation
6100 Seagull St. NE - Suite 102
Albuquerque, NM 87109 - (505) 881-5357

AS BUILT INFORMATION

CONTRACTOR	
WORK STAKED BY	DATE
INSPECTOR'S ACCEPTANCE BY	DATE
FIELD VERIFICATION BY	DATE
DRAWINGS CORRECTED BY	DATE
MICRO-FILM INFORMATION	
RECORDED BY	DATE
NO.	

BENCH MARKS

THE STATION MARK IS A STANDARD ACS BRASS TABLET, STAMPED "1-L21 RESET 1994", LOCATED 7.8 MILES EAST OF DOWNTOWN ALBUQUERQUE, AT THE INTERSECTION OF CENTRAL AVE. AND JUAN TABO BLVD. THE STATION IS ON THE MEDIAN STRIP OF CENTRAL AVE., 81' WEST OF THE CENTERLINE OF JUAN TABO BLVD. AND FLUSH WITH THE TOP OF CURB. SLD ELEVATION 5534.63

SURVEY INFORMATION

FIELD NOTES		
NO.	BY	DATE

ENGINEER'S SEAL

NO.	DATE	REMARKS	BY

DESIGN - : DATE 11/94
DESIGNED BY DA : DATE 11/94
DRAWN BY RAYJ : DATE 11/94
CHECKED BY JD

CITY OF ALBUQUERQUE
PUBLIC WORKS DEPARTMENT
ENGINEERING GROUP

TITLE: WILLOW WOOD – UNIT V
JEWEL CAVE ROAD
UTILITY PLAN AND PROFILE

APPROVALS	ENGINEER	DATE	APPROVALS	ENGINEER	DATE
D.R.C. Chair			Water		
Transportation	N/A	RHD	9-20-95	Waste Water	10/26/95
Hydrology					

DRAWING NO.	MAP NO.	SHEET	OF
4604.94	L-21-Z	18	24

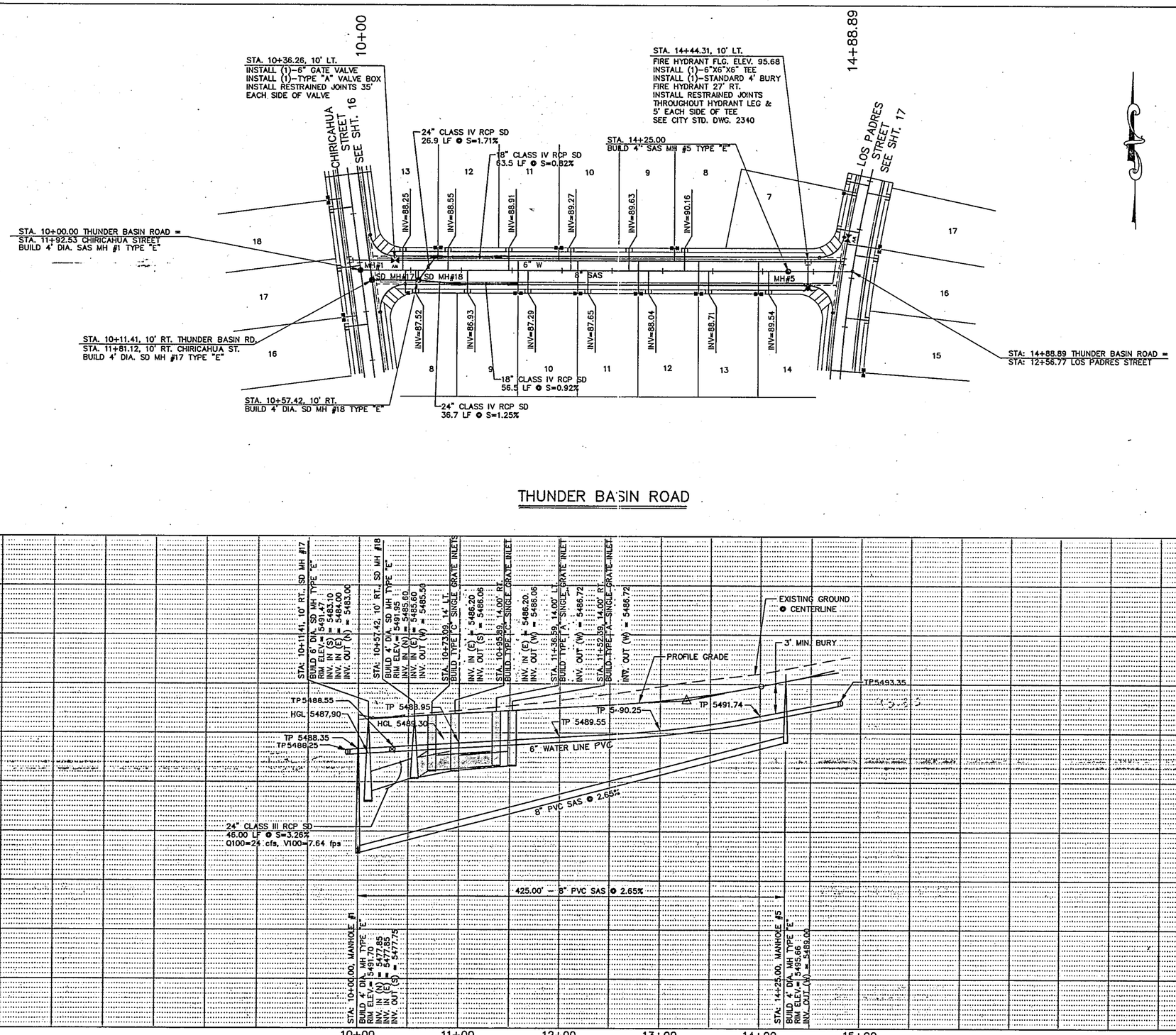

WILLOW\DWGS5\UT-THUN.DWG

UTILITY NOTES

1.) STATIONING ALONG ℄ OF STREET UNLESS OTHERWISE NOTED.

2.) SANITARY SEWER LINE LENGTHS COMPUTED FROM MH ℄ TO MH ℄.

3.) SLOPES ARE COMPUTED INVERT TO INVERT. MH RIM ELEVATIONS GIVEN ARE APPROXIMATE. CONTRACTOR SHALL ADJUST ALL RIMS TO FINAL GRADE.

4.) CONTRACTOR IS RESPONSIBLE FOR COORDINATION WITH UTILITY COMPANIES.

5.) CONTRACTOR SHALL VERIFY ALL EXISITING UTILITIES AND UTILITY CONNECTIONS PRIOR TO BEGINNING CONSTRUCTION. SHOULD A CONFLICT EXIST OR DESIGN REVISIONS BE REQUIRED FOR ANY REASON, THE CONTRACTOR SHALL NOTIFY THE ENGINEER AND ALLOW SUFFICIENT TIME FOR DESIGN REVISIONS SO AS TO NOT DELAY THE CONSTRUCTION SCHEDULE.

LEGEND

— —W— —	EXISTING WATERLINE
— — SD — —	EXISTING STORM DRAIN
— —SAS— —	EXISTING SANITARY SEWER
MH	EXISTING MANHOLE
	EXISTING FIRE HYDRANT
W	EXISTING GATE VALVE
W	PROPOSED WATERLINE
SD	PROPOSED STORM DRAIN
SAS	PROPOSED SANITARY SEWER
●	PROPOSED MANHOLE
	PROPOSED FIRE HYDRANT
W	PROPOSED GATE VALVE
	PROPOSED CAP OR PLUG
	PROPOSED SINGLE METER, WATER SERVICE LINE
	PROPOSED DOUBLE METER, WATER SERVICE LINES
	PROPOSED SANITARY SEWER SERVICE LINE
	PROPOSED CROSS, TEE, OR ELBOW
	PROPOSED STORM INLET

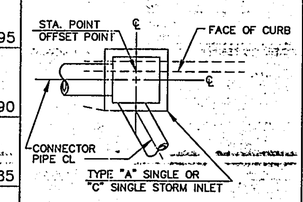

TYPICAL INLET LOCATION DETAIL

AVID ENGINEERING, INC.
Civil • Structural • Transportation
6100 Seagull St. NE - Suite 102
Albuquerque, NM 87109 - (505) 881-5357

AS BUILT INFORMATION

CONTRACTOR		
WORK STAKED BY		DATE
INSPECTOR'S ACCEPTANCE BY		DATE
FIELD VERIFICATION BY		DATE
DRAWINGS CORRECTED BY		DATE

MICRO-FILM INFORMATION

RECORDED BY	DATE
NO.	

BENCH MARKS

THE STATION MARK IS A STANDARD ACS BRASS TABLET, STAMPED "1-L21 RESET 1994", LOCATED 7.8 MILES EAST OF DOWNTOWN ALBUQUERQUE, AT THE INTERSECTION OF CENTRAL AVE. AND JUAN TABO BLVD. THE STATION IS ON THE MEDIAN STRIP OF CENTRAL AVE., 81' WEST OF THE CENTERLINE OF JUAN TABO BLVD. AND FLUSH WITH THE TOP OF CURB. SLD ELEVATION 5534.63

SURVEY INFORMATION

FIELD NOTES

NO.	BY	DATE

ENGINEER'S SEAL

NO.	DATE	REMARKS	BY

DESIGN

		DATE
DESIGNED BY	DA	11/94
DRAWN BY	RAYJ	11/94
CHECKED BY	JD	11/94

CITY OF ALBUQUERQUE
PUBLIC WORKS DEPARTMENT
ENGINEERING GROUP

TITLE: WILLOW WOOD - UNIT V
THUNDER BASIN ROAD
UTILITY PLAN AND PROFILE

APPROVALS	ENGINEER	DATE	APPROVALS	ENGINEER	DATE
D.R.C. Chair			Water		
Transportation	N/A	RHO	9-20-95	Waste Water	10/23/95
Hydrology					

DRAWING NO.	MAP NO.	SHEET	OF
4604.94	L-21-Z	19	24

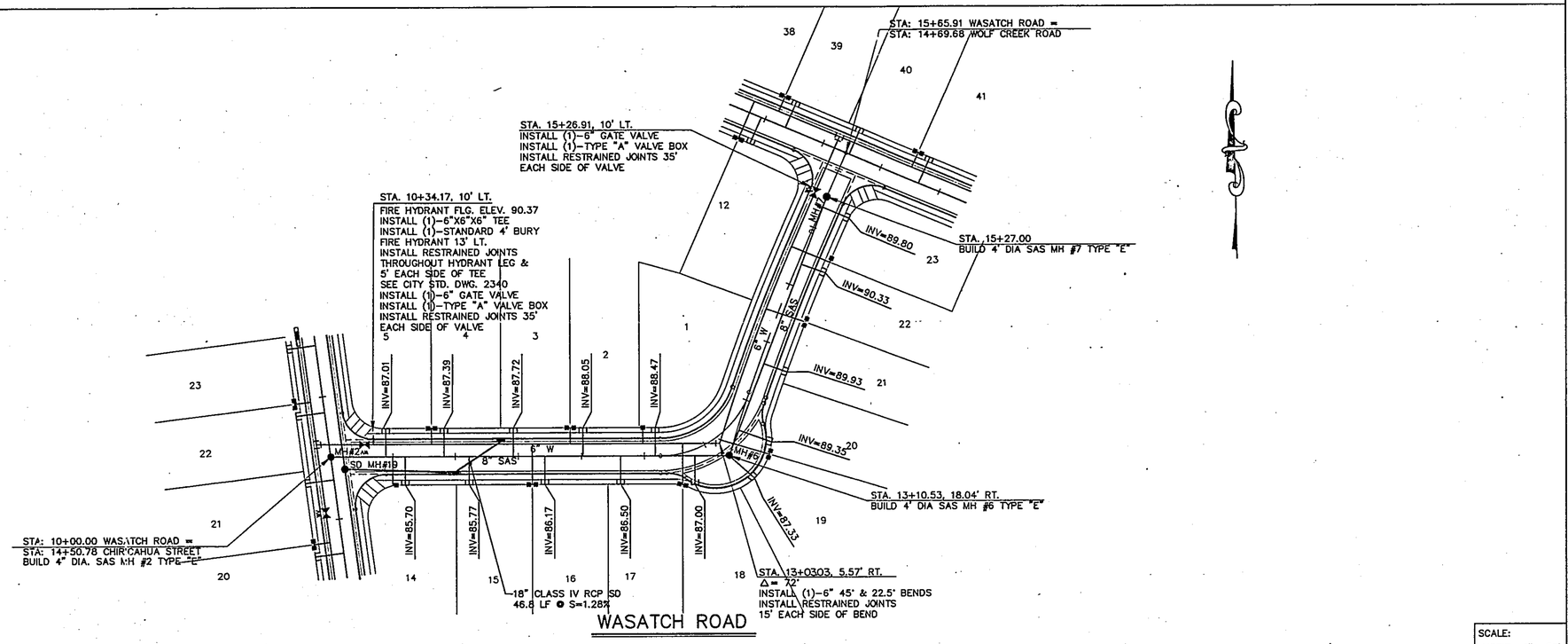

SCALE:
HORIZ.: 1"= 50'
VERT.: 1"= 5'

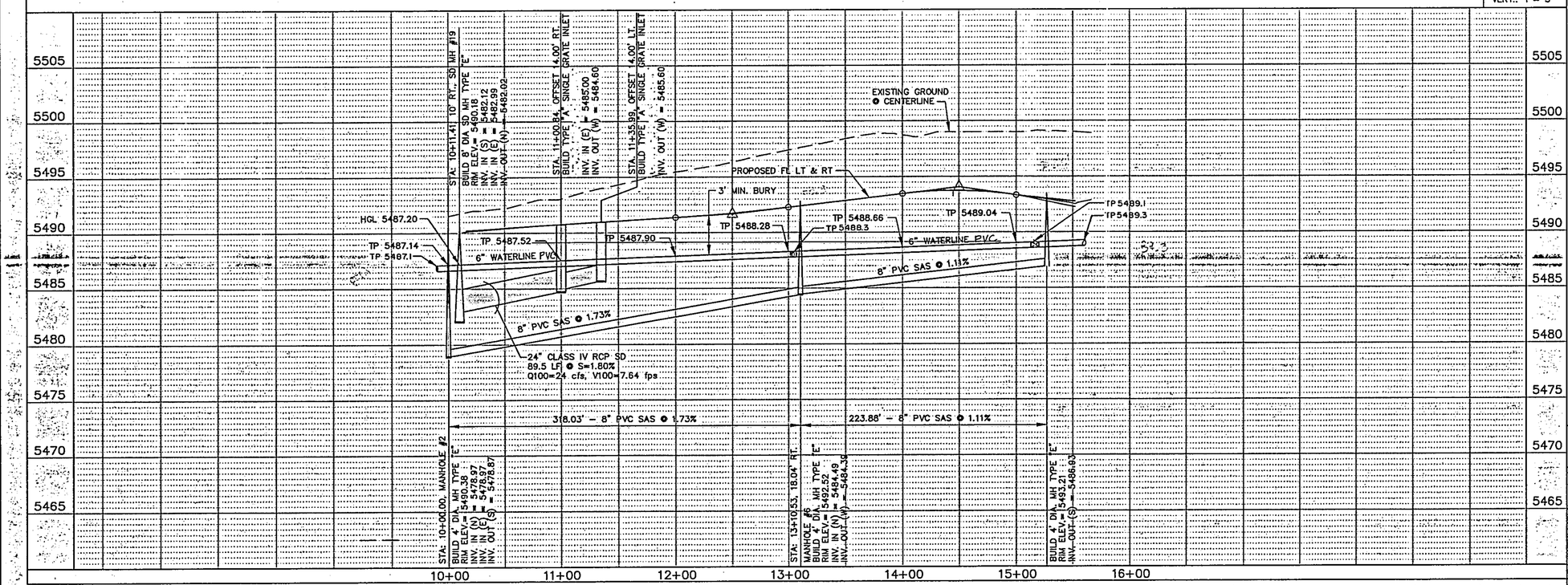

WILLOW\DWGS5\UT-WASA.DWG

UTILITY NOTES

1.) STATIONING ALONG ℄ OF STREET UNLESS OTHERWISE NOTED.

2.) SANITARY SEWER LINE LENGTHS COMPUTED FROM MH ℄ TO MH ℄.

3.) SLOPES ARE COMPUTED INVERT TO INVERT. MH RIM ELEVATIONS GIVEN ARE APPROXIMATE. CONTRACTOR SHALL ADJUST ALL RIMS TO FINAL GRADE.

4.) CONTRACTOR IS RESPONSIBLE FOR COORDINATION WITH UTILITY COMPANIES.

5.) CONTRACTOR SHALL VERIFY ALL EXISITING UTILITIES AND UTILITY CONNECTIONS PRIOR TO BEGINNING CONSTRUCTION. SHOULD A CONFLICT EXIST OR DESIGN REVISIONS BE REQUIRED FOR ANY REASON, THE CONTRACTOR SHALL NOTIFY THE ENGINEER AND ALLOW SUFFICIENT TIME FOR DESIGN REVISIONS SO AS TO NOT DELAY THE CONSTRUCTION SCHEDULE.

LEGEND

— —W— —	EXISTING WATERLINE
— — SD — —	EXISTING STORM DRAIN
— —SAS— —	EXISTING SANITARY SEWER
MH	EXISTING MANHOLE
	EXISTING FIRE HYDRANT
	EXISTING GATE VALVE
W	PROPOSED WATERLINE
SD	PROPOSED STORM DRAIN
SAS	PROPOSED SANITARY SEWER
●	PROPOSED MANHOLE
	PROPOSED FIRE HYDRANT
	PROPOSED GATE VALVE
	PROPOSED CAP OR PLUG
	PROPOSED SINGLE METER, WATER SERVICE LINE
	PROPOSED DOUBLE METER, WATER SERVICE LINES
	PROPOSED SANITARY SEWER SERVICE LINE
	PROPOSED CROSS, TEE, OR ELBOW
	PROPOSED TYPE DOUBLE "A" STORM INLET

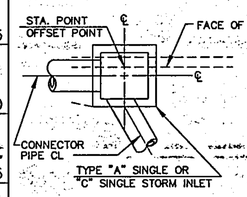

TYPICAL INLET LOCATION DETAIL

AVID ENGINEERING, INC.
Civil • Structural • Transportation
6100 Seagull St. NE – Suite 102
Albuquerque, NM 87109 – (505) 881-5357

AS BUILT INFORMATION

CONTRACTOR		DATE
WORK STAKED BY		DATE
ACCEPTANCE BY		DATE
FIELD VERIFICATION BY		DATE
DRAWINGS CORRECTED BY		DATE
MICRO-FILM INFORMATION		
RECORDED BY		DATE
NO.		

BENCH MARKS

THE STATION MARK IS A STANDARD ACS BRASS TABLET, STAMPED "L-21 RESET 1994", LOCATED 7.8 MILES EAST OF DOWNTOWN ALBUQUERQUE, AT THE INTERSECTION OF CENTRAL AVE. AND JUAN TABO BLVD. THE STATION IS ON THE MEDIAN STRIP OF CENTRAL AVE., 81' WEST OF THE CENTERLINE OF JUAN TABO BLVD. AND FLUSH WITH THE TOP OF CURB. SLD ELEVATION 5534.63

SURVEY INFORMATION

FIELD NOTES

NO.	BY	DATE

ENGINEER'S SEAL

NO.	DATE	REMARKS	BY

DESIGN

		DATE
DESIGNED BY	DA	11/94
DRAWN BY	RAYJ	11/94
CHECKED BY	JD	11/94

CITY OF ALBUQUERQUE
PUBLIC WORKS DEPARTMENT
ENGINEERING GROUP

TITLE: WILLOW WOOD – UNIT V
WASATCH ROAD
UTILITY PLAN AND PROFILE

APPROVALS	ENGINEER	DATE	APPROVALS	ENGINEER	DATE
D.R.C. Chair			Water		
Transportation	N/A	9.20.95	Waste Water		10/23/95
Hydrology					

DRAWING NO.	MAP NO.	SHEET	OF
4604.94	L-21-Z	20	24

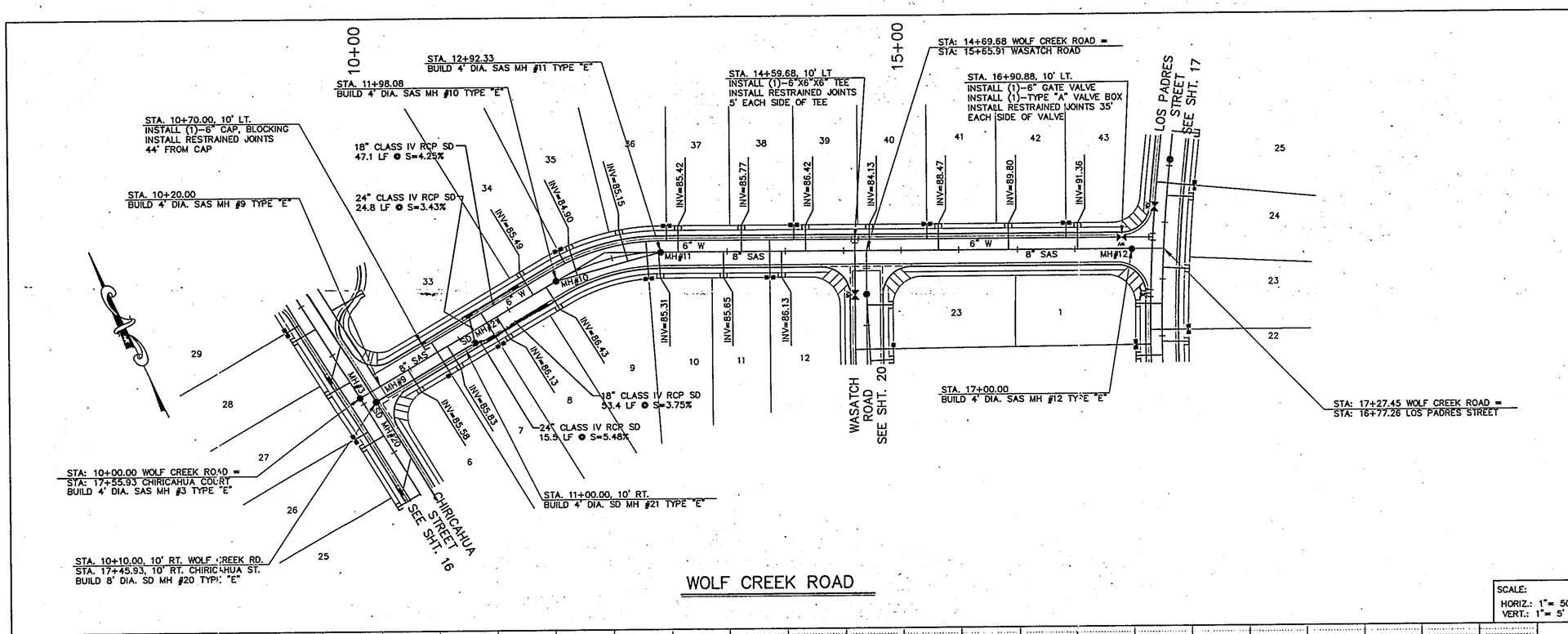

SCALE:
HORIZ.: 1"= 50'
VERT.: 1"= 5'

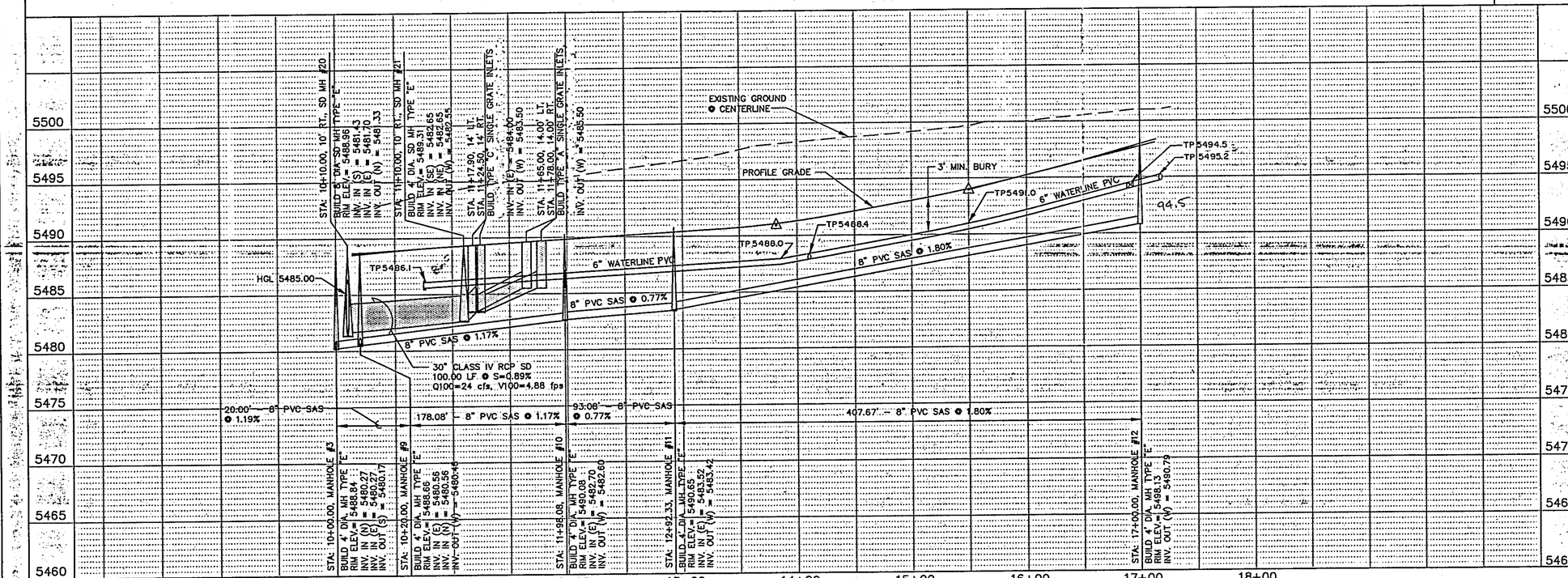

WILLOW\DWGSS\UT-WOLF.DWG

UTILITY NOTES

1.) STATIONING ALONG ℄ OF STREET UNLESS OTHERWISE NOTED.

2.) SANITARY SEWER LINE LENGTHS COMPUTED FROM MH ℄ TO MH ℄.

3.) SLOPES ARE COMPUTED INVERT TO INVERT. MH RIM ELEVATIONS GIVEN ARE APPROXIMATE. CONTRACTOR SHALL ADJUST ALL RIMS TO FINAL GRADE.

4.) CONTRACTOR IS RESPONSIBLE FOR COORDINATION WITH UTILITY COMPANIES.

5.) CONTRACTOR SHALL VERIFY ALL EXISTING UTILITIES AND UTILITY CONNECTIONS PRIOR TO BEGINNING CONSTRUCTION. SHOULD A CONFLICT EXIST OR DESIGN REVISIONS BE REQUIRED FOR ANY REASON, THE CONTRACTOR SHALL NOTIFY THE ENGINEER AND ALLOW SUFFICIENT TIME FOR DESIGN REVISIONS SO AS TO NOT DELAY THE CONSTRUCTION SCHEDULE.

LEGEND

—W—	EXISTING WATERLINE
—SD—	EXISTING STORM DRAIN
—SAS—	EXISTING SANITARY SEWER
	EXISTING MANHOLE
	EXISTING FIRE HYDRANT
	EXISTING GATE VALVE
W	PROPOSED WATERLINE
SD	PROPOSED STORM DRAIN
SAS	PROPOSED SANITARY SEWER
●	PROPOSED MANHOLE
	PROPOSED FIRE HYDRANT
	PROPOSED GATE VALVE
	PROPOSED CAP OR PLUG
	PROPOSED SINGLE METER, WATER SERVICE LINE
	PROPOSED DOUBLE METER, WATER SERVICE LINES
	PROPOSED SANITARY SEWER SERVICE LINE
	PROPOSED CROSS, TEE, OR ELBOW
	PROPOSED TYPE DOUBLE "A" STORM INLET

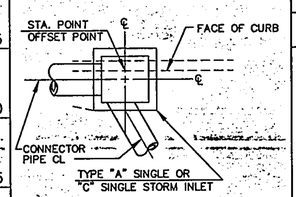

TYPICAL INLET LOCATION DETAIL

AVID ENGINEERING, INC.
Civil • Structural • Transportation
6100 Seagull St. NE – Suite 102
Albuquerque, NM 87109 – (505) 881-5357

AS BUILT INFORMATION

		DATE
CONTRACTOR		
WORK STAKED BY		
AS-BUILTS CHECKED BY		
ACCEPTANCE BY		
CENTRAL AVE. AND JUAN TABO BLVD. THE STATION IS ON THE MEDIAN STRIP OF CENTRAL AVE., 81' WEST OF THE CENTERLINE OF JUAN TABO BLVD. AND FLUSH WITH THE TOP OF CURB. SLD ELEVATION 5534.63	VERIFICATION BY	
	DRAWINGS CORRECTED BY	
	MICRO-FILM INFORMATION	
	RECORDED BY	
	NO.	

BENCH MARKS

SURVEY INFORMATION

FIELD NOTES

NO.	BY	DATE

ENGINEER'S SEAL

NO.	DATE	REMARKS	BY

DESIGNED BY DA DATE 11/94
DRAWN BY RAYU DATE 11/94
CHECKED BY JD DATE 11/94

CITY OF ALBUQUERQUE
PUBLIC WORKS DEPARTMENT
ENGINEERING GROUP

TITLE: WILLOW WOOD – UNIT V
WOLF CREEK ROAD
UTILITY PLAN AND PROFILE

APPROVALS	ENGINEER	DATE	APPROVALS	ENGINEER	DATE
D.R.C. Chair			Water		
Transportation	N/A RHD	9-20-95	Waste Water		10/25/95
Hydrology					

DRAWING NO.	MAP NO.	SHEET	OF
4604.94	L-21-Z	21	24

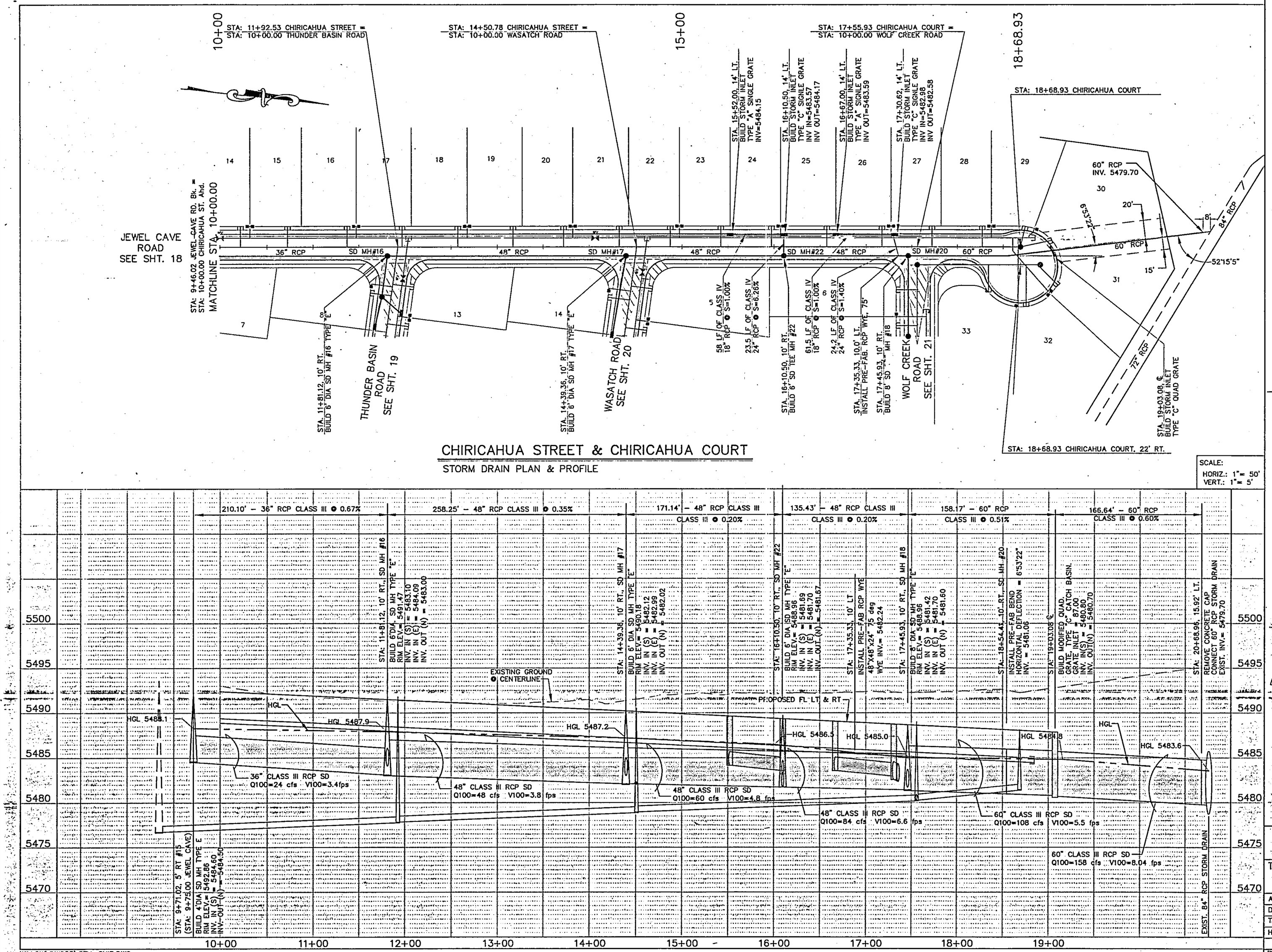

CHIRICAHUA STREET & CHIRICAHUA COURT

STORM DRAIN PLAN & PROFILE

SCALE:
HORIZ.: 1"= 50'
VERT.: 1"= 5'

WILLOW\DWGS5\STM-CHIR.DWG

UTILITY NOTES

1.) STATIONING ALONG ℄ OF STREET UNLESS OTHERWISE NOTED.

2.) STORM SEWER LINE LENGTHS COMPUTED FROM MH ℄ TO MH ℄.

3.) SLOPES ARE COMPUTED INVERT TO INVERT. MH RIM ELEVATIONS GIVEN ARE APPROXIMATE. CONTRACTOR SHALL ADJUST ALL RIMS TO FINAL GRADE.

4.) INLET INVERTS AND CONNECTOR PIPE SLOPES AND LENGTHS ARE COMPUTED FROM STA./OFFSET TO STA./OFFSET SHOWN ON PLANS.

5.) CONTRACTOR IS RESPONSIBLE FOR COORDINATION WITH UTILITY COMPANIES.

6.) CONTRACTOR SHALL VERIFY ALL EXISTING UTILITIES AND UTILITY CONNECTIONS PRIOR TO BEGINNING CONSTRUCTION. SHOULD A CONFLICT EXIST OR DESIGN REVISIONS BE REQUIRED FOR ANY REASON, THE CONTRACTOR SHALL NOTIFY THE ENGINEER AND ALLOW SUFFICIENT TIME FOR DESIGN REVISIONS SO AS TO NOT DELAY THE CONSTRUCTION SCHEDULE.

7.) CONTRACTOR SHALL SUBMIT DETAILED SHOP DRAWINGS OF PRE FABRICATED RCP PIPE FOR APPROVAL BY THE CONSTRUCTION INSPECTOR.

LEGEND

SD	PROPOSED STORM DRAIN
●	PROPOSED MANHOLE
	PROPOSED STORM INLET

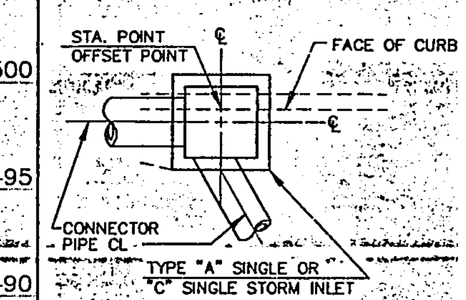

TYPICAL INLET LOCATION DETAIL

AVID ENGINEERING, INC.
Civil • Structural • Transportation
6100 Seagull St. NE – Suite 102
Albuquerque, NM 87109 – (505) 881-5357

AS BUILT INFORMATION

CONTRACTOR	
WORK STAKED BY	DATE
WORK INSPECTED BY	
ACCEPTANCE BY	DATE
FIELD VERIFICATION BY	
DATE	
DRAWINGS CORRECTED BY	
DATE	
MICRO-FILM INFORMATION	
RECORDED BY	DATE
NO.	

BENCH MARKS

THE STATION MARK IS A STANDARD ACS BRASS TABLET, STAMPED "1-L21 RESET 1994", LOCATED 7.8 MILES EAST OF DOWNTOWN ALBUQUERQUE, AT THE INTERSECTION OF CENTRAL AVE. AND JUAN TABO BLVD. THE STATION IS ON THE MEDIAN STRIP OF CENTRAL AVE., 81' WEST OF THE CENTERLINE OF JUAN TABO BLVD. AND FLUSH WITH THE TOP OF CURB. SLD ELEVATION 5534.63

SURVEY INFORMATION

FIELD NOTES

NO.	BY	DATE

ENGINEER'S SEAL

NO.	DATE	REMARKS	BY

DESIGN

DESIGNED BY	DA	DATE 11/94
DRAWN BY	RAYJ	DATE 11/94
CHECKED BY	JD	DATE 11/94

CITY OF ALBUQUERQUE
PUBLIC WORKS DEPARTMENT
ENGINEERING GROUP

TITLE: WILLOW WOOD – UNIT V
CHIRICAHUA STREET & CHIRICAHUA COURT
STORM DRAIN PLAN AND PROFILE

APPROVALS	ENGINEER	DATE	APPROVALS	ENGINEER	DATE
D.R.C. Chair			Water		
Transportation			Waste Water		10/26/95
Hydrology					

DRAWING NO.	MAP NO.	SHEET	OF
4604.94	L-21-Z	22	24

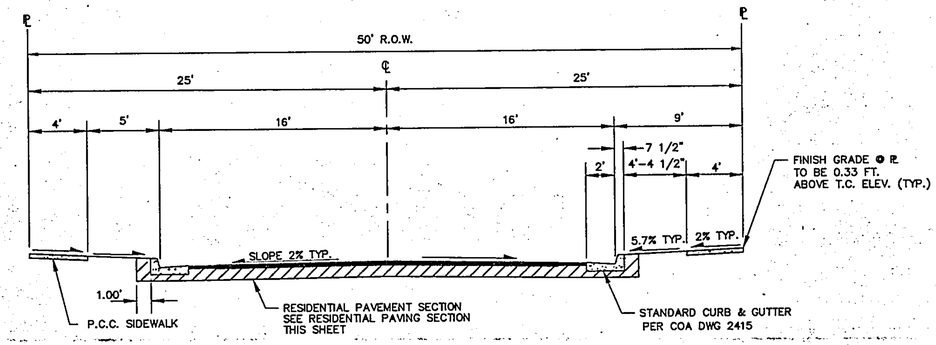

TYPICAL RESIDENTIAL STREET SECTION – 50' ROW

SCALE: 1"=5'

ARCHES ROAD

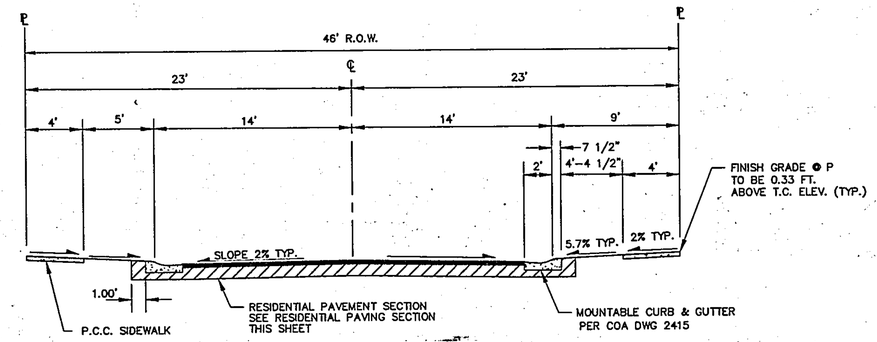

TYPICAL RESIDENTIAL STREET SECTION – 46' ROW

SCALE: 1"=5'

LOS PADRES STREET
WASATCH ROAD
WOLF CREEK ROAD

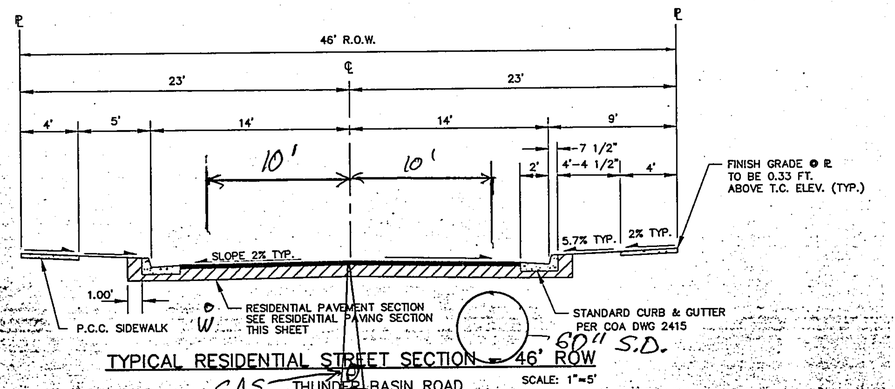

TYPICAL RESIDENTIAL STREET SECTION – 46' ROW

SCALE: 1"=5'

SAS

THUNDER BASIN ROAD
JEWEL CAVE ROAD
CHIRICAHUA STREET AND COURT
WOLF CREEK ROAD

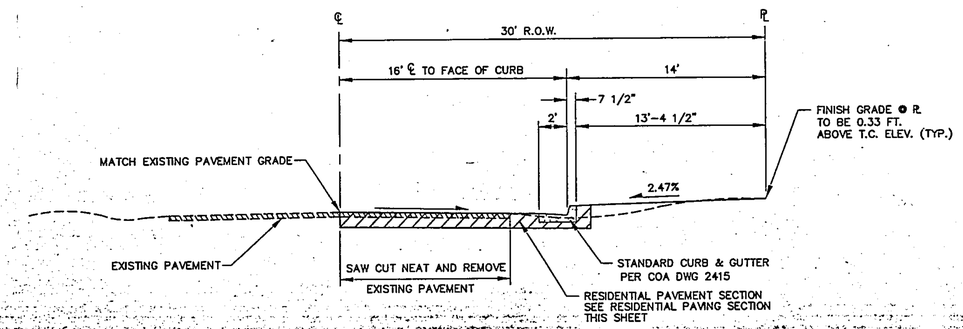

TYPICAL SECTION GIBSON BOULEVARD

(LOOKING WEST)

SCALE: 1"=5'

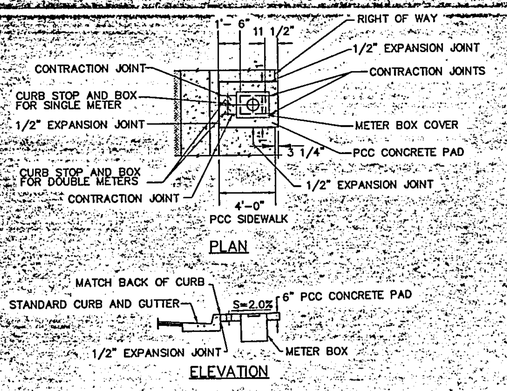

WATER METER INSTALLATION DETAIL – 4'-7 1/2" ℄ TO ROW

1"=5'

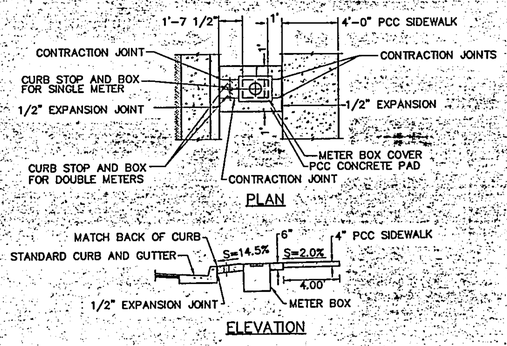

WATER METER INSTALLATION DETAIL – 9' ℄ TO ROW

1"=5'

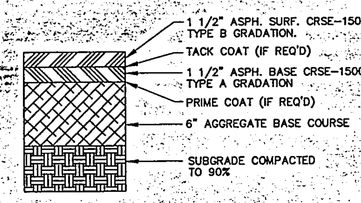

RESIDENTIAL PAVING SECTION

NTS

AS BUILT INFORMATION

CONTRACTOR	
WORK STAKED BY	DATE
WORK INSPECTED & ACCEPTANCE BY	DATE
FIELD VERIFICATION BY	DATE
DRAWINGS CORRECTED BY	DATE
MICRO-FILM INFORMATION	
RECORDED BY	DATE
NO.	

BENCH MARKS

THE STATION MARK IS A STANDARD ACS BRASS TABLET, STAMPED "1-L21 RESET 1974," LOCATED 7.8 MILES EAST OF DOWNTOWN ALBUQUERQUE, AT THE INTERSECTION OF CENTRAL AVE. AND JUAN TABO BLVD. THE STATION IS ON THE MEDIAN STRIP OF CENTRAL AVE., 81' WEST OF THE CENTERLINE OF JUAN TABO BLVD. AND FLUSH WITH THE TOP OF CURB. SLD ELEV. 5534.63

SURVEY INFORMATION

FIELD NOTES

NO.	BY	DATE

ENGINEER'S SEAL

NO.	DATE	REMARKS	BY

DESIGN

DESIGNED BY DA	DATE 11/94	
DRAWN BY RAYJ	DATE 11/94	
CHECKED BY JD	DATE 11/94	

AVID ENGINEERING, INC.
Civil • Structural • Transportation
6100 Seagull St. NE – Suite 102
Albuquerque, NM 87109 – (505) 881-5357

CITY OF ALBUQUERQUE
PUBLIC WORKS DEPARTMENT
ENGINEERING GROUP

TITLE: WILLOW WOOD – UNIT V
STREET PAVING SECTIONS AND DETAILS

APPROVALS	ENGINEER	DATE	APPROVALS	ENGINEER	DATE
D.R.C. Chair			Water		
Transportation		9-20-95	Waste Water		10/20/95
Hydrology					

DRAWING NO.	MAP NO.	SHEET	OF
4604.94	L-21-Z	23	24

D:\WILLOW\DNGSS\PWSECS Wed Sep 13 13:34:25 1995