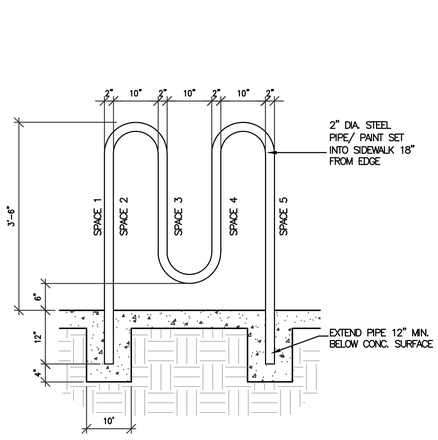

TYP. BICYCLE RACK DETAIL
6 3/4"=1'-0"

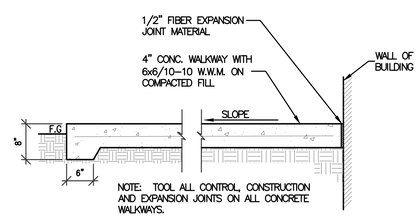

TYP. CONCRETE SIDEWALK DETAIL
5 3/4"=1'-0"

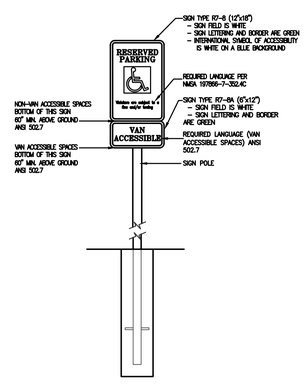

TYP. ACCESSIBLE SIGNAGE DETAIL
2 3/4"=1'-0"

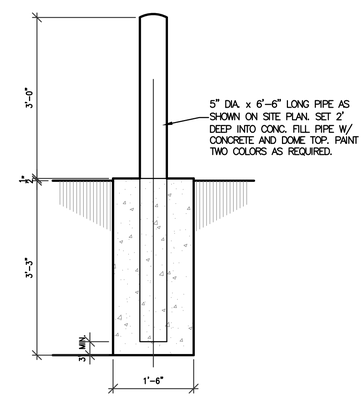

TYP. BOLLARD DETAIL
7 3/4"=1'-0"

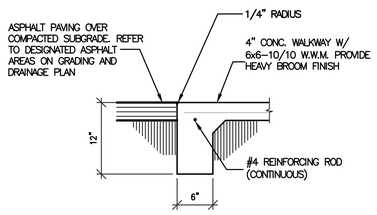

TYP. CONCRETE CURB AND SIDEWALK DETAIL
4 1"=1'-0"

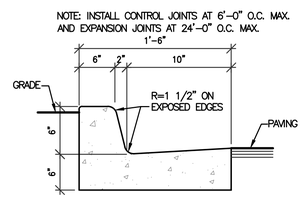

TYP. CONCRETE CURB AND GUTTER DETAIL
3 1"=1'-0"

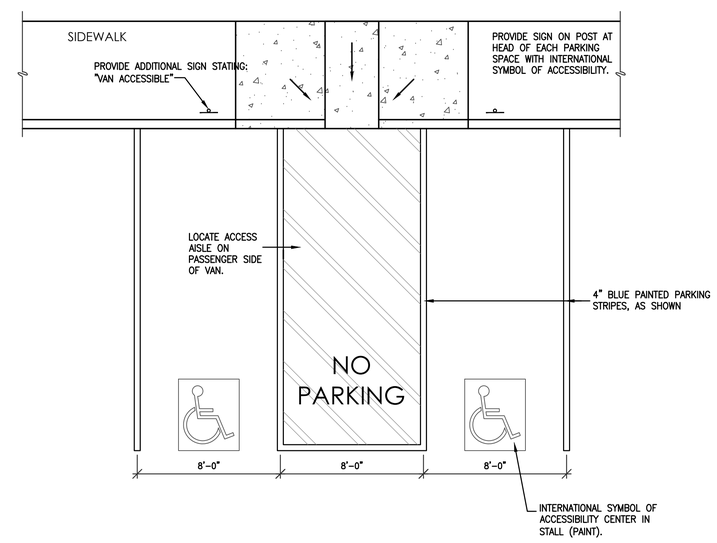

ACCESSIBLE PARKING
1 1/4"=1'-0"

BEEHIVE HOMES
QUALITY SENIOR LIVING

BEEHIVE HOMES INC.
SITE DETAILS
ALBUQUERQUE, NM
PROJECT #1575

REVISION DATE

STATE OF NEW MEXICO
RICHARD P. BENNETT
No. 1240
4/13/17
REGISTERED ARCHITECT

RBA ARCHITECTURE, PC
ARCHITECTURE
PLANNING
DESIGN
1120 Paseo de Peralta, Suite 200
Santa Fe, New Mexico 87501
P:(505)983-1591 F:(505)983-6383
www.rbaarchitect.com

DATE
04-13-2017

SHEET NUMBER
AS-2.0