CITY OF ALBUQUERQUE

July 6, 2010

Mario G. Juarez-Infante, P.E.
Wilson & Company, Inc.
4900 Lang Ave. NE
Albuquerque, NM 87109

Re: Carlos Rey Elementary School Pre-K/SPED Portables Grading and Drainage Plan

Engineer's Stamp dated 7-2-10 (M08/D002)

Dear Mr. Juarez-Infante,

Based upon the information provided in your submittal received 7-2-10, the above referenced plan is approved for Building Permit. Please attach a copy of this approved plan to the construction sets prior to sign-off by Hydrology.

Prior to Certificate of Occupancy release, Engineer Certification per the DPM checklist will be required.

If you have any questions, you can contact me at 924-3695.

Sincerely,

Curtis A. Cherne

Curtis A. Cherne, P.E.
Senior Engineer, Planning Dept.
Development and Building Services

C: file

PO Box 1293

Albuquerque

NM 87103

www.cabq.gov

City of Albuquerque Planning Department

One Stop Shop – Development and Building Services

07/02/2010 Issued By: PLNSDH 81005

Permit Number: **2010 060 051** **Category Code 970**

Application Number: 10REV-60051, Review:Drain Plan-Lomr-Traffic Impact

Address:

Location Description: 1215 CERRILLOS RD SW, M-8

M-08 / D002

Project Number: null

Applicant
ALBUQUERQUE PUBLIC SCHOOLS
SAL WAR
915 OAK ST
ALBUQUERQUE NM 87108
765-5950

Agent / Contact
Wilson & Company
Nathan Burns Eit
4900 Lang Ave Ne
Albuquerque NM 87109
948-5123

Application Fees

441006/4983000	REV Actions	$50.00
	TOTAL:	**$50.00**

TIM,

HE TOOK HIS COPY INFO SHT & OUR COPY.
CURTIS SAID HE IS NEW SO THIS WILL HAVE TO DO UNLESS YOU WANT ME TO CALL HIM.

Sandy

BT

City Of Albuquerque
Treasury Division

7/2/2010 9:34AM LOC: ANNX
WS# 006 TRANS# 0007
RECEIPT# 00122421-00122421
PERMIT# 2010060051 TRSLJS
Trans Amt $50.00
REV Actions $50.00
CK $50.00
CHANGE $0.00

Thank You

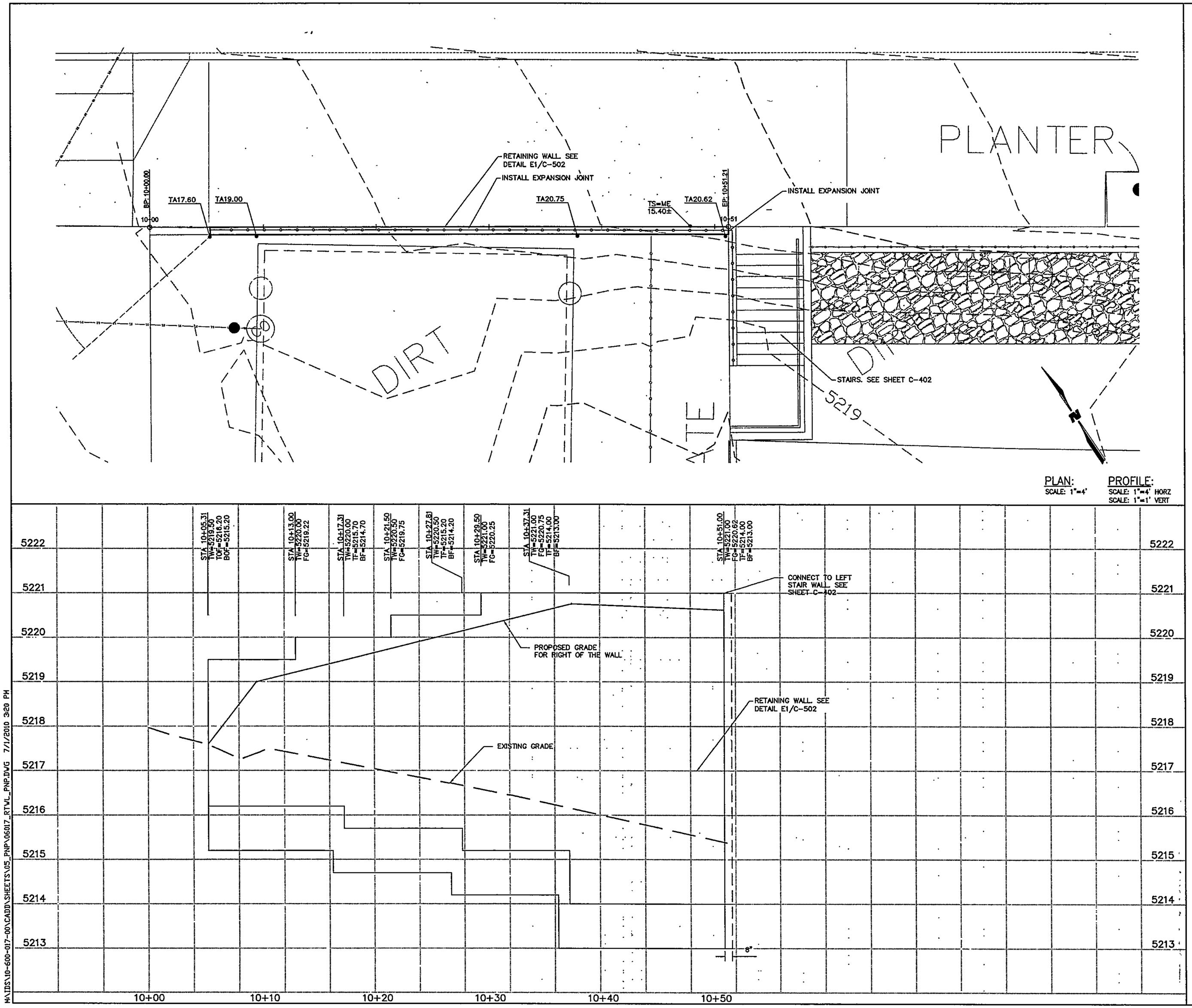

M:\IDS\10-600-017-00\CADD\SHEETS\05_PNP\06017_RTVL_PNP.DWG 7/1/2010 3:20 PM

WILSON & COMPANY
4900 LANG AVENUE N.E.
ALBUQUERQUE, NEW MEXICO 87109
PH (505) 348-4000
FAX (505) 348-4072
www.wilsonco.com

CONSULTANTS

SEAL

PROJECT NAME
CARLOS-REY-
ELEMENTARY SCHOOL
PRE-K/SPED
PORTABLES

MARK	DESCRIPTION	DATE

PROJECT NO:	1060001700
DESIGNED BY:	DNP
DRAWN BY:	JEM
CHECKED BY:	MJI
DATE:	

SHEET TITLE
RETAINING WALL PLAN & PROFILE

SHEET NO:
C-401

RECEIVED
JUL 02 2010
HYDROLOGY SECTION

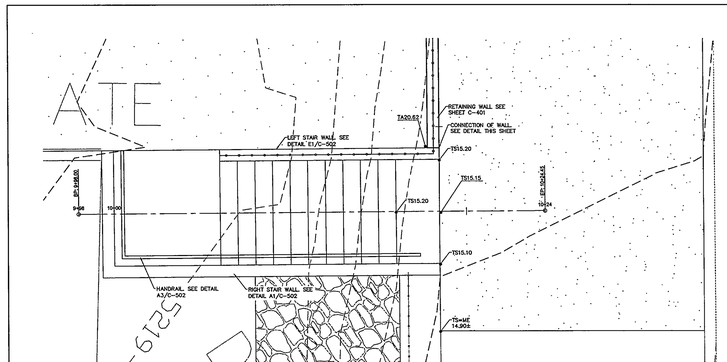

PLAN:
SCALE: 1"=2'

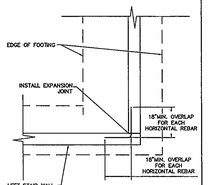

WALL CONNECTION DETAIL
SCALE: 1"=2'

PROFILE:
SCALE: 1"=2' HORZ
SCALE: 1"=2' VERT

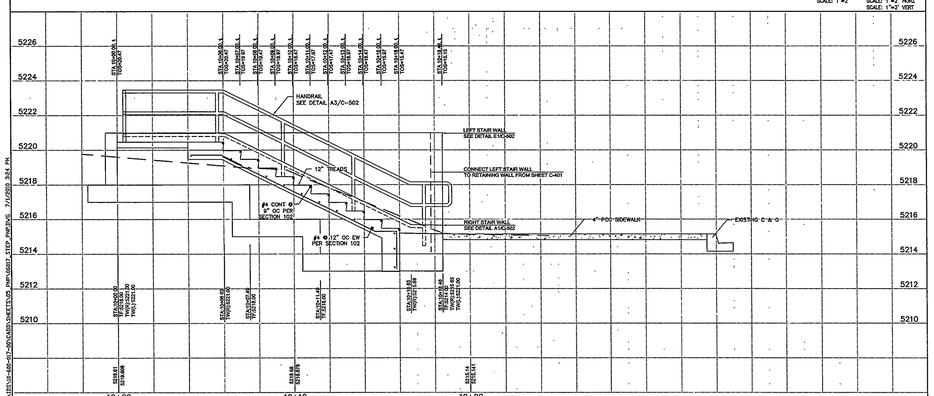

GENERAL NOTES

A NOSING – SUPERIOR TYPE 235, CG-1 CONCRETE NOSING, ANODIZED ALUMINUM, 330, INSTALL STAIR NOSING TO EACH STAIR TREAD ON CENTERLINE OF STAIRS. TERMINATE NOSING 6" FROM END OF STAIR TREADS. PAINT SURFACES IN CONTACT W/ CONCRETE.

B STAIR CONCRETE SHALL BE BROOM FINISHED.

C LANDING – LANDINGS SHALL BE 5'-0" LONG UNLESS INDICATED OTHERWISE.

D ALL TOP OF FOOTINGS CORRESPOND TO BOTH LEFT & RIGHT STAIR WALLS.

WILSON & COMPANY
4000 LAND AVENUE #C
ALBUQUERQUE, NEW MEXICO 87109
PH: (505) 348-4000
FX: (505) 348-4001
www.wilsonco.com

CONSULTANTS

SEAL

PROJECT NAME: CARLOS REY ELEMENTARY SCHOOL PRE-K/SPED PORTABLES

MARK	DESCRIPTION	DATE

PROJECT NO: 106000700
DESIGNED BY: DHP
DRAWN BY: JDH
CHECKED BY: MA
DATE:

SHEET TITLE: STAIR PLAN & PROFILE

SHEET NO: C-402

CONSTRUCTION NOTES:
A. GATE LATCH WITH HANDAL PROOF SHIELD & PADLOCK
B. 2 1/2" DIA. TRUSS RODS, WELDED AT CORNERS
C. 2- 3/4" THREADED TRUSS RODS AND BRACKET ATTACHMENT
D. 2" NO 9 GAUGE CHAIN LINK GALV WIRE FABRIC, VERIFY WITH OWNER.
E. STEEL TENSION BANDS AT 18" OR LESS OC
F. BRACE, 1 1/4" DIA. WELDED TO FRAME
G. GATE FRAME, 2" DIA (2.375 OD) WELDED
H. MALLEABLE ACORN CAP
J. 4" 2-BOLT, THREADED
K. 3 1/2" GATE POST (4" OD) WITH WELDED STEEL CAP
L. TENSION BAR 1/4" X 3/4"
M. GATE CLAMP
N. 9" DIA. HOLES, FILLED WITH PORTLAND CEMENT CONC.
P. CORNER POST 3 1/2" DIA (3.875 OD)
Q. LINE POST 2" DIA (2.375 OD)
R. TOP AND BRACE RAILS 1 1/4" DIA (1.660 OD)
S. WIRE REINFORCEMENT, 9 GAUGE, INSTALL 3" ABOVE BOTTOM OF FABRIC.
T. TRUSS ROD 3/8" DIA.
U. FABRIC SHALL BE TACK WELDED TWO PLACES TO EACH TENSION BAR AND THREE PLACES TO ALL TOP AND BRACE RAILS BETWEEN POSTS
V. ALL NUTS, BOLTS, AND OTHER CONNECTIONS SHALL BE TACK WELDED
W. WIRE TIES, 9 GA GALV STEEL AT 18" OC

GENERAL NOTES:
1. GATE TO BE USED AS SPECIFIED ON CONSTRUCTION DRAWINGS.
2. SINGLE LEAF GATES WILL BE USED ON OPENINGS OF 12' OR LESS. FOR MORE THAN 12', DOUBLE LEAF GATES SHALL BE USED. WITH A CENTER LOCK POST INSERTED IN A PIPE SLEEVE IN CENTER OF OPENING.
3. DIMENSIONS ABOVE OR BELOW GRADE SHALL BE AS SHOWN ON CONSTRUCTION DRAWINGS. BOTTOM OF GATE SHALL BE FLUSH WITH GRADE LEVEL.
4. ALL METAL ITEMS, INCLUDING PIPE, SHALL BE GALV. STEEL. ALL PIPE SHALL BE NOMINAL SIZE, SCHED 40.

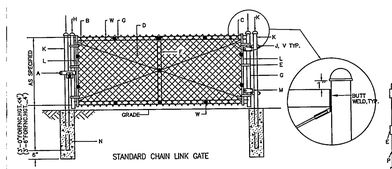

STANDARD CHAIN LINK GATE

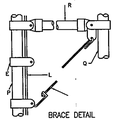

BRACE DETAIL

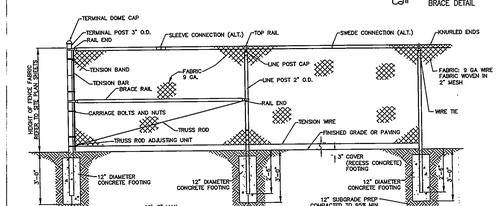

A1 CHAINLINK FENCE DETAIL
SCALE: NTS

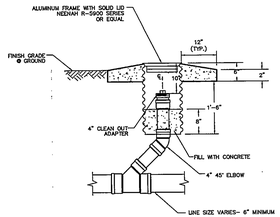

F6 SINGLE CLEANOUT DETAIL
SCALE: 1" = 1'

CONSTRUCTION NOTES:
1 WHEN ABUTTING TO VERTICAL WALLS, BENCHES OR BUILDINGS, INSTALL 2" BITUMINOUS EXPANSION JOINT, RECESS 12" VERTICALLY. INSTALL SIKA-FLEX POLYMER SEALANT OR APPROVED EQUAL PER SECTION 107 (TYP)
2 SEE ARCHITECTURAL PLANS FOR JOINT DETAIL OR INSTALL CONTRACTION JOINTS AT 6'-0" OC
3 LIGHT BROOM FINISHED CONCRETE SURFACE REQUIRED.

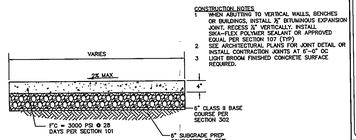

G8 4" PCC DETAIL
SCALE: NTS

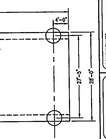

F8 PIER LOCATION (28' x 64')
SCALE: NTS

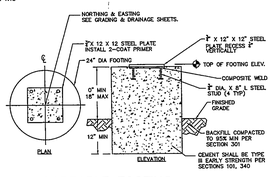

C8 PORTABLE FOOTING
SCALE: NTS

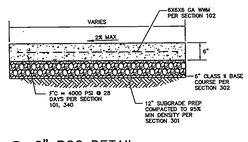

C6 6" PCC DETAIL
SCALE: NTS

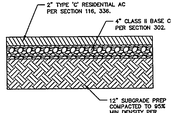

A6 2" ASPHALT DETAIL
SCALE: NTS

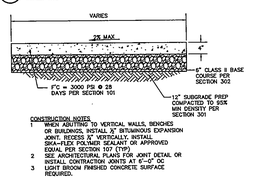

CONSTRUCTION NOTES:
1 WHEN ABUTTING TO VERTICAL WALLS, BENCHES OR BUILDINGS, INSTALL 2" BITUMINOUS EXPANSION JOINT, RECESS 12" VERTICALLY. INSTALL SIKA-FLEX POLYMER SEALANT OR APPROVED EQUAL PER SECTION 107 (TYP)
2 SEE ARCHITECTURAL PLANS FOR JOINT DETAIL OR INSTALL CONTRACTION JOINTS AT 6'-0" OC
3 LIGHT BROOM FINISHED CONCRETE SURFACE REQUIRED.

A8 4" PCC DETAIL
SCALE: NTS

WILSON & COMPANY
4000 LAND AVENUE #C
ALBUQUERQUE, NEW MEXICO 87109
PH: (505) 348-4000
FX: (505) 348-4001
www.wilsonco.com

CONSULTANTS

SEAL

PROJECT NAME: CARLOS REY ELEMENTARY SCHOOL PRE-K/SPED PORTABLES

MARK	DESCRIPTION	DATE

PROJECT NO: 106000700
DESIGNED BY: DHP
DRAWN BY: JDH
CHECKED BY: MA
DATE:

SHEET TITLE: DETAILS

SHEET NO: C-501

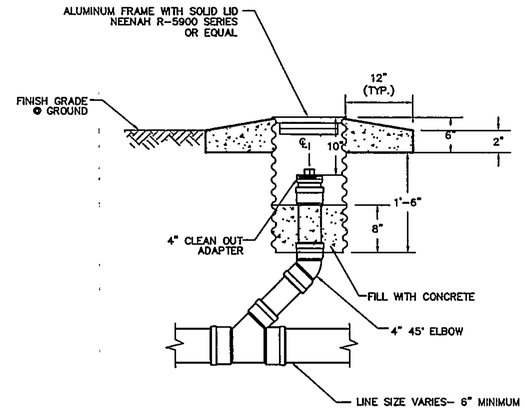

F6 SINGLE CLEANOUT DETAIL
SCALE: 1" = 1'

CONSTRUCTION NOTES:
A. GATE LATCH WITH VANDAL PROOF SHIELD & PADLOCK
B. 2- 3/8" TRUSS RODS, WELDED AT CORNERS
C. 2- 3/8" THREADED TRUSS RODS AND BRACKET ATTACHMENT
D. 2" NO 9 GAUGE CHAIN LINK GALV WIRE FABRIC, VERIFY WITH OWNER.
E. STEEL TENSION BANDS AT 18" OR LESS OC
F. BRACE, 1 1/4" DIA, WELDED TO FRAME
G. GATE FRAME, 2" DIA (2.375 OD) WELDED
H. MALLEABLE ACORN CAP
J. 4" J-BOLT, THREADED
K. 3 1/2" GATE POST (4" OD) WITH WELDED STEEL CAP
L. TENSION BAR 1/4" X 3/4"
M. GATE CLAMP.
N. 12" DIA. HOLES, FILLED WITH PORTLAND CEMENT CONC.
P. CORNER POST 2 1/2" DIA (2.875 OD)
Q. LINE POST 2" DIA (2.375 OD)
R. TOP AND BRACE RAILS 1 1/4" DIA (1.660 OD)
S. WIRE REINFORCEMENT, 9 GAUGE, INSTALL 3" ABOVE BOTTOM OF FABRIC.
T. TRUSS ROD 3/8" DIA
U. FABRIC SHALL BE TACK WELDED TWO PLACES TO EACH TENSION BAR AND THREE PLACES TO ALL TOP AND BRACE RAILS BETWEEN POSTS
V. ALL NUTS, BOLTS, AND OTHER CONNECTIONS SHALL BE TACK WELDED
W. WIRE TIES, 9 GA GALV STEEL AT 18" OC

GENERAL NOTES:
1. GATE TO BE USED AS SPECIFIED ON CONSTRUCTION DRAWINGS.
2. SINGLE LEAF GATES WILL BE USED ON OPENINGS OF 12' OR LESS. FOR MORE THAN 12', DOUBLE LEAF GATES SHALL BE USED, WITH A CENTER LOCK POST INSERTED IN A PIPE SLEEVE IN CENTER OF OPENING.
3. DIMENSIONS ABOVE OR BELOW GRADE LEVEL WILL BE ON CONSTRUCTION DRAWINGS. IF NONE ARE NOTED, MESH IS FLUSH WITH GRADE LEVEL.
4. ALL METAL ITEMS, INCLUDING PIPE, SHALL BE GALV. STEEL. ALL PIPE SHALL BE NOMINAL SIZE, SCHED 40.

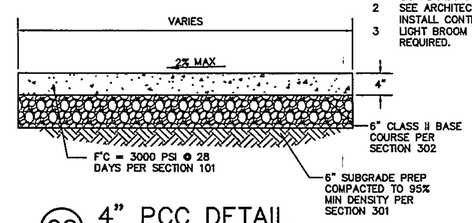

G8 4" PCC DETAIL
SCALE: NTS

CONSTRUCTION NOTES
1 WHEN ABUTTING TO VERTICAL WALLS, BENCHES OR BUILDINGS, INSTALL ½" BITUMINOUS EXPANSION JOINT. RECESS ¼" VERTICALLY. INSTALL SIKA-FLEX POLYMER SEALANT OR APPROVED EQUAL PER SECTION 107 (TYP)
2 SEE ARCHITECTURAL PLANS FOR JOINT DETAIL OR INSTALL CONTRACTION JOINTS AT 6'-0" OC
3 LIGHT BROOM FINISHED CONCRETE SURFACE REQUIRED.

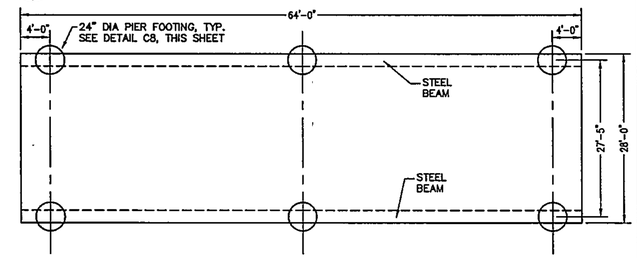

F8 PIER LOCATION (28' x 64')
SCALE: NTS

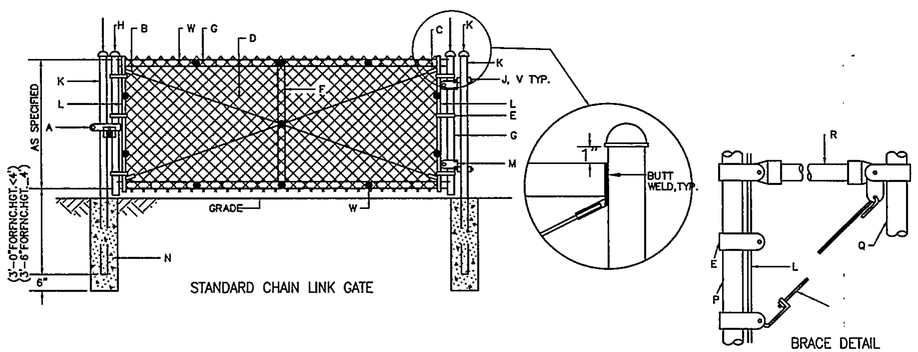

STANDARD CHAIN LINK GATE

BRACE DETAIL

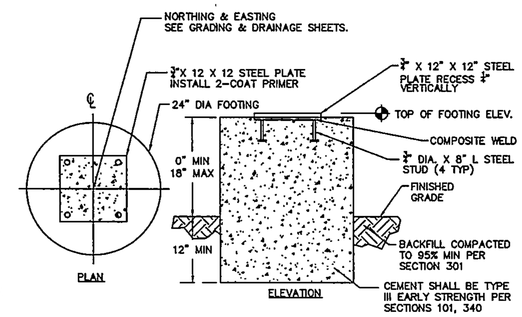

C8 PORTABLE FOOTING
SCALE: NTS

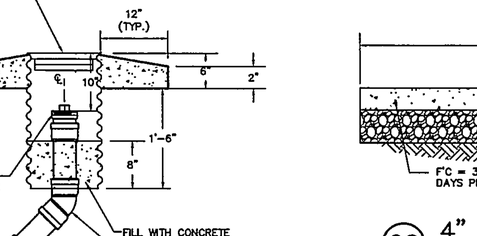

C6 6" PCC DETAIL
SCALE: NTS

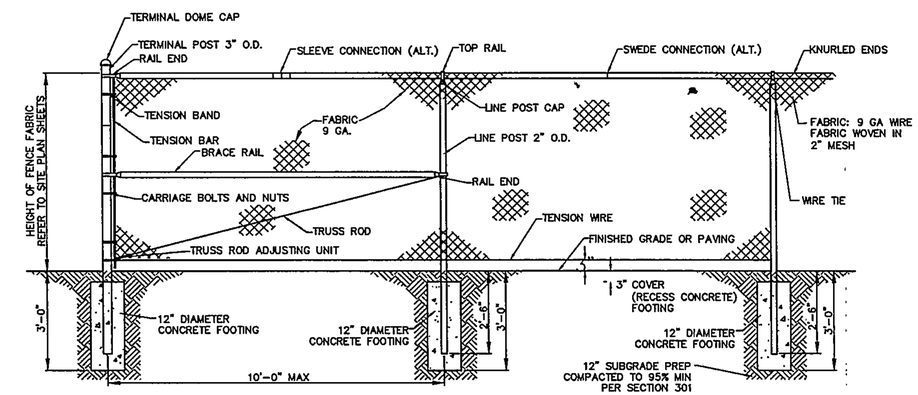

A1 CHAINLINK FENCE DETAIL
SCALE: NTS

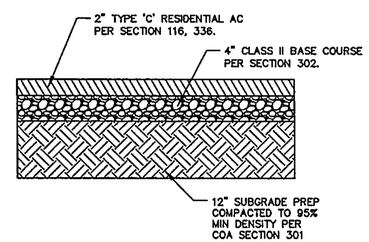

A6 2" ASPHALT DETAIL
SCALE: NTS

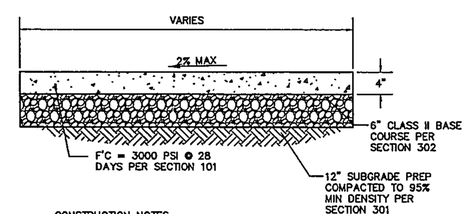

CONSTRUCTION NOTES
1 WHEN ABUTTING TO VERTICAL WALLS, BENCHES OR BUILDINGS, INSTALL ½" BITUMINOUS EXPANSION JOINT. RECESS ¼" VERTICALLY. INSTALL SIKA-FLEX POLYMER SEALANT OR APPROVED EQUAL PER SECTION 107 (TYP)
2 SEE ARCHITECTURAL PLANS FOR JOINT DETAIL OR INSTALL CONTRACTION JOINTS AT 6'-0" OC
3 LIGHT BROOM FINISHED CONCRETE SURFACE REQUIRED.

A8 4" PCC DETAIL
SCALE: NTS

WILSON & COMPANY
4900 LANG AVENUE N.E.
ALBUQUERQUE, NEW MEXICO 87109
PH (505) 348-4000
FAX (505) 348-4072
www.wilsonco.com

CONSULTANTS

SEAL

PROJECT NAME
CARLOS REY - ELEMENTARY SCHOOL PRE-K/SPED PORTABLES

MARK	DESCRIPTION	DATE

PROJECT NO:	1060001700
DESIGNED BY:	DNP
DRAWN BY:	JEM
CHECKED BY:	MJI
DATE:	

SHEET TITLE
DETAILS

SHEET NO:
C-501

M:\DS\10-600-017-00\CADD\SHEETS\05_DTL\06017_DTL.dwg 4/26/2010 3:35:59 PM MDT

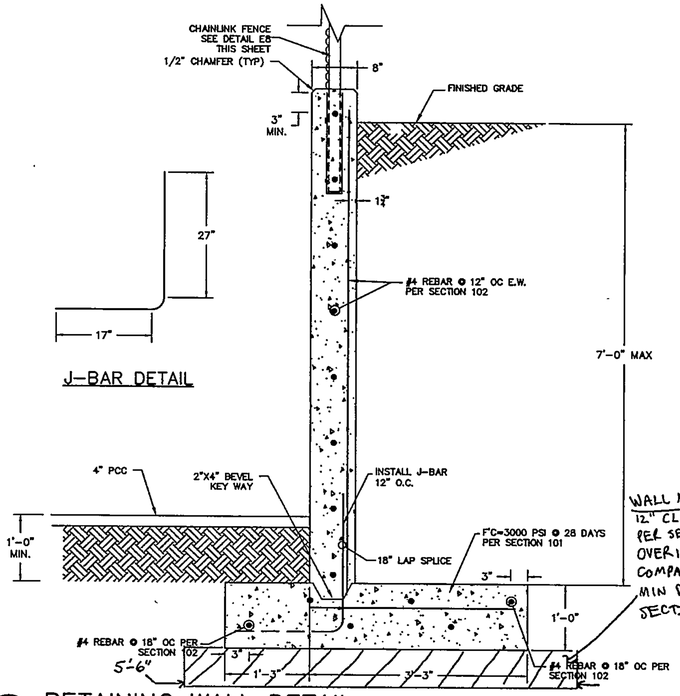

E1 RETAINING WALL DETAIL
SCALE: NTS

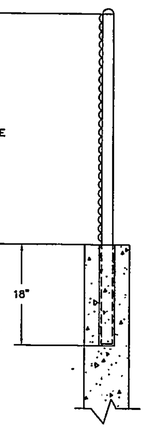

E8 RETAINING WALL WITH CHAINLINK FENCE
SCALE: NTS

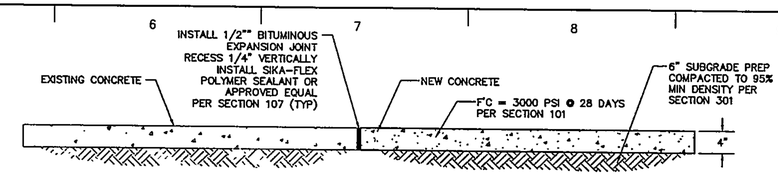

G6 OLD/NEW CONCRETE JOINT DETAIL
SCALE: NTS

CONSTRUCTION NOTES

1 WHEN ABUTTING TO VERTICAL WALLS, BENCHES OR BUILDINGS, INSTALL 1/2" BITUMINOUS EXPANSION JOINT. RECESS 1/4" VERTICALLY. INSTALL SIKA-FLEX POLYMER SEALANT OR APPROVED EQUAL PER SECTION 107 (TYP).

2 SEE ARCHITECTURAL PLANS FOR JOINT DETAIL OR INSTALL CONTRACTION JOINTS @ 6'-0" OC

3 LIGHT BROOM FINISHED CONCRETE SURFACE REQUIRED.

GENERAL NOTES:

1. ALL ADA PLAYGROUND SITE WORK SHALL COMPLY WITH THE CITY OF ALBUQUERQUE STANDARD SPECIFICATIONS FOR PUBLIC WORKS CONSTRUCTION, LATEST EDITION.
2. REFER TO ALBUQUERQUE PUBLIC SCHOOL FACILITIES DESIGN & CONSTRUCTION DEPARTMENT FOR ADA PLAYGROUND EQUIPMENT GUIDELINES.

SHEET KEY NOTES

1. 6" WIDE PLAYGROUND HEADER CURB.
2. INSTALL 1/2" EXPANSION JOINT RECESS 1/4" VERTICALLY INSTALL SIKA-FLEX POLYMER SEALANT OR APPROVED EQUAL.
3. 4" PORTLAND CEMENT CONCRETE.
4. INSTALL TOOLED JOINT 1" DEEP.
5. 12" SUBGRADE PREP. COMPACTED TO 95% MIN. PER SECTIONS 301 R>40.
6. f'c = 3000 PSI CONCRETE @ 28 DAYS PER SECTION 101.
7. INSTALL #3 CONTINUOUS REBAR PER SECTION 102.
8. ENGINEERED FILL AS APPROVED BY A/E OF RECORD.
9. TURN DOWN FOOTING.
10. PLAYGROUND EQUIPMENT FALL ZONE.
11. NOT USED
12. TAPER HEADER CURB @ 1:1 TO ALIGN WITH 5'-0" MINIMUM RAMP OPENING, IF NECESSARY.
13. 3" CHAMFER (TYP)
12. TOOLED EDGE (TYP).
13. 3" CHAMFER (TYP).
14. #3 REBAR @ 12" OC EW PER SECTION 102
15. INSTALL 2" ASPHALT. SEE DETAIL A6/C-501.

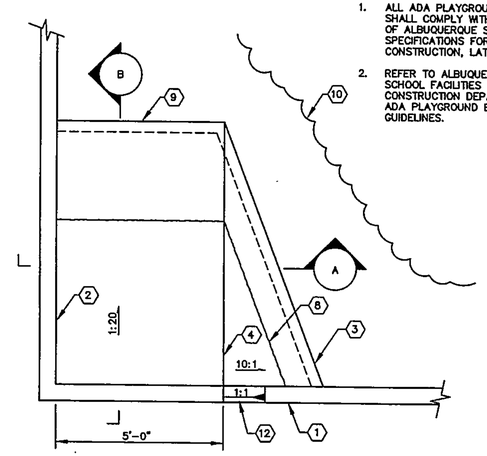

PLAN
SCALE: 1" = 2'

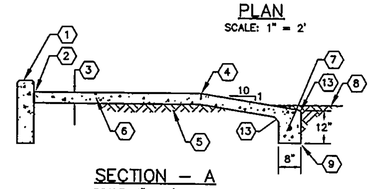

SECTION – A
SCALE: 1" = 2'

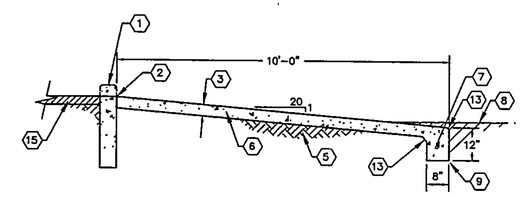

SECTION – B
SCALE: 1" = 2'

C6 PLAYGROUND RAMP DETAIL
SCALE: 1" = 2'

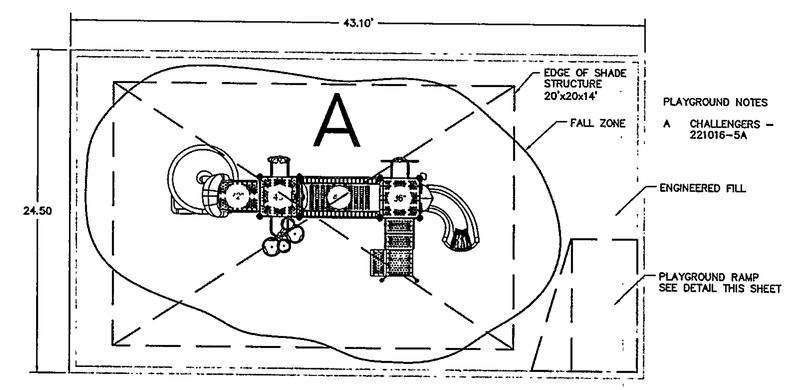

PLAYGROUND NOTES

A CHALLENGERS – 221016-5A

A6 PLAYGROUND LAYOUT
SCALE: NTS

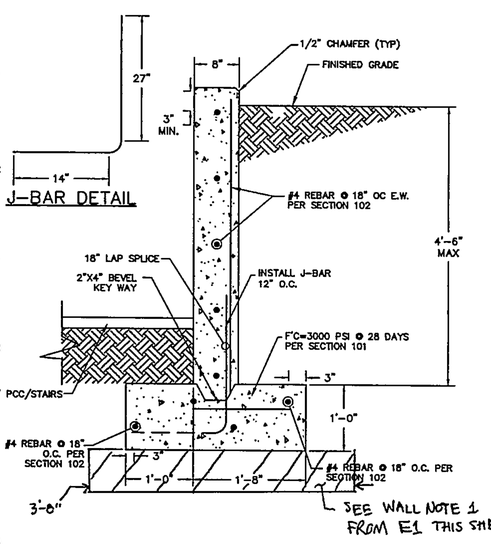

A1 STAIR WALL DETAIL
SCALE: NTS

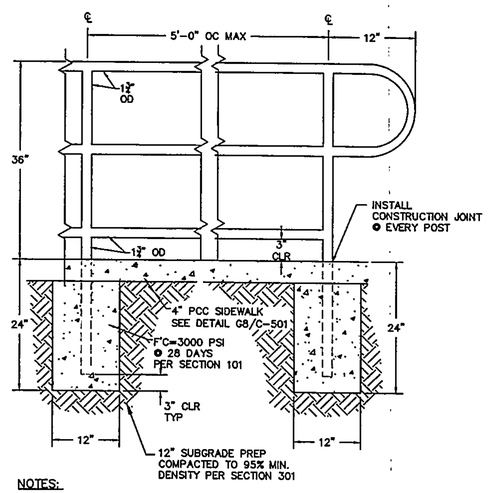

NOTES:

1 HANDRAILS \ GUARDRAILS SHALL HAVE 1 COAT GRAY PRIMER 2 COAT PAINT. SUBMIT COLOR CHART FOR COLOR SELECTION & APPROVAL TO PROJECT MANAGER.

2 COORDINATE SLEEVES DURING CONSTRUCTION OF STAIRS

A3 36" HANDRAIL DETAIL
SCALE: NTS

WILSON & COMPANY
4900 LANG AVENUE N.E.
ALBUQUERQUE, NEW MEXICO 87109
PH (505) 348-4000
FX (505) 348-4022
www.wilsonco.com

CONSULTANTS

SEAL

PROJECT NAME
CARLOS REY ELEMENTARY SCHOOL PRE-K/SPED PORTABLES

MARK	DESCRIPTION	DATE

PROJECT NO:	1060001700
DESIGNED BY:	DNP
DRAWN BY:	JEM
CHECKED BY:	MJI
DATE:	

SHEET TITLE
DETAILS

SHEET NO:
C-502

M:\105\10-600-017-00\CADD\SHEETS\05_DTL\06017_DTL.dwg 4/26/2010 3:35:59 PM MDT

Drainage Report
For

CARLOS REY ELEMENTARY SCHOOL ADDITION

Prepared by:

Walla Engineering, Ltd.
6100 Indian School Rd. NE
Suite 105
Albuquerque, New Mexico 87110

Prepared for:
Albuquerque Public Schools
And
Huitt-Zollars, Inc.
6501 Americas Parkway NE
Suite 550
Albuquerque, New Mexico 87110-5022

RECEIVED
OCT 03 2006
HYDROLOGY SECTION

September 2006

I certify that this report was prepared under my supervision, and I am a registered professional engineer in the state of New Mexico in good standing.

MIKE J. WALLA
NEW MEXICO
REGISTERED PROFESSIONAL ENGINEER

Mike J. Walla
PE No. 11036

Project # H27-0406

TABLE OF CONTENTS

SECTION I – REPORT
Introduction.....3
Existing Drainage Conditions.....3
Flood Plain Map.....4
Vicinity Map.....5
Proposed Drainage Conditions.....6
Calculations.....6
Summary.....7

SECTION II – RUNOFF CALCULATIONS.....8
Runoff Calculations
Pipe Calculations
Pond Calculations

SECTION I

REPORT

Introduction

The site is located on Albuquerque's far west side at 1215 Cerrillos Rd. SW. The proposed development is the construction of two new classroom buildings and the rearrangement of portable buildings on the existing elementary school campus. The site is bordered by Delgado Drive on the west, Carlos Rey Park on the south, Cerrillos Road on the north and residences on Benevides Road on the east. The site is indicated on the attached City of Albuquerque Zone Atlas Map, M-8-Z. The purpose of this report is to calculate onsite developed flows and design runoff management through the site to an existing retention pond at the northeast end of the site.

Existing Drainage Conditions

The existing school is constructed on a site sloping from west to east with several portable buildings and two permanent structures and some paving installed throughout the site. The buildings are concentrated on the west end of the site and most of the runoff currently sheet flows across the site to the lowest end of the site on the east border. The east border is an athletic field extending from the south perimeter to a pond located on the north perimeter. In the event of a large storm the athletic field stores pond overflow. No appreciable offsite flows enter the site since the bordering streets on the west and north convey offsite flows to downstream facilities. The park south of the school has a paved trench which collects runoff and directs it downstream as well. The residences east of the site drain to Benevides Rd.

CITY OF ALBUQUERQUE
www.cabq.gov

ALBUQUERQUE GIS DATA WEBSITE

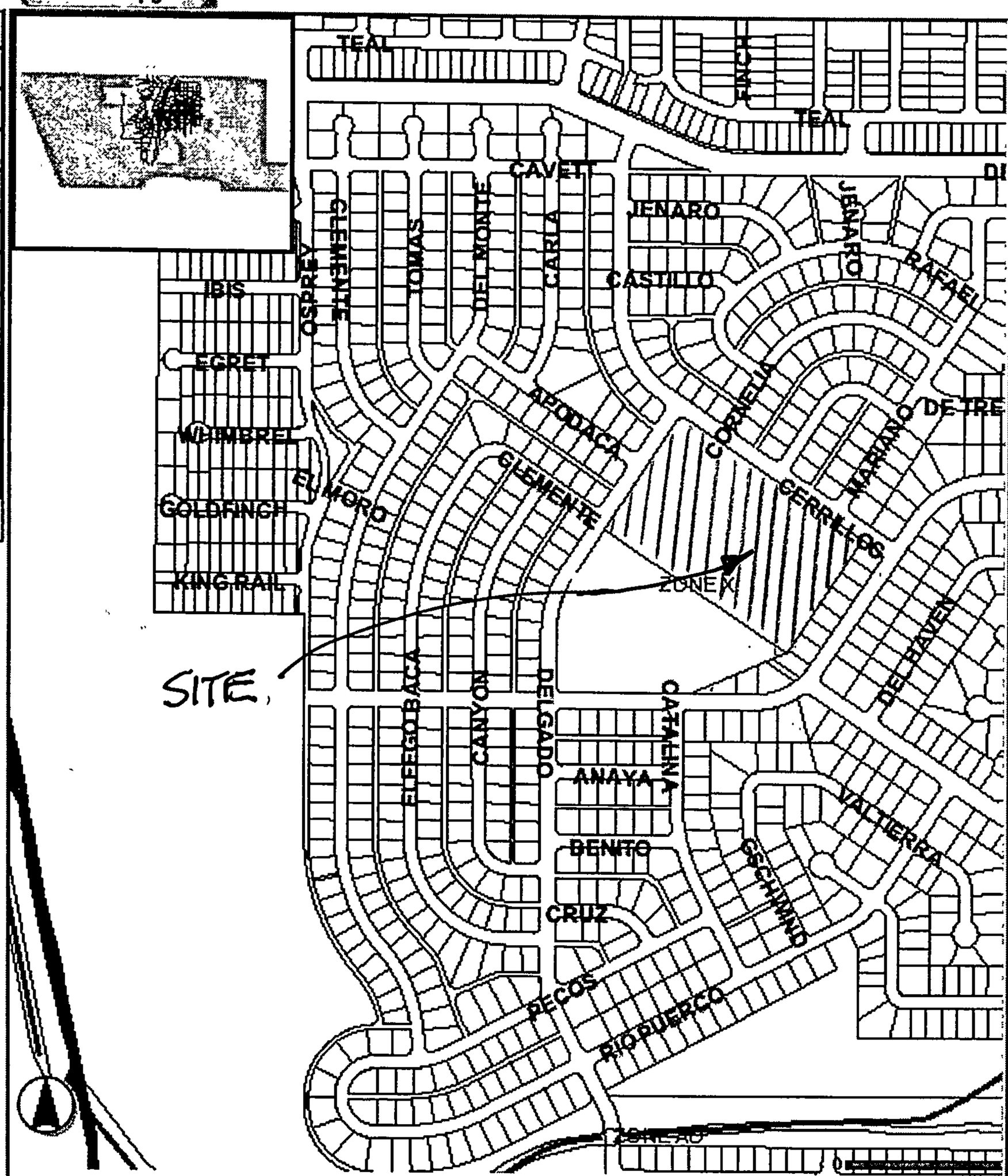

LAYERS
- STREETS
- BASEMAP
  - PARCELS
  - LOT NUMBERS
  - METRO ADDRESS
  - ZONING
  - OWNERSHIP
  - 2FT CONTOUR
  - ADDRESS POINTS
  - LANDUSE
- INFRASTRUCTURE
- TRANSIT/SUNTRAN
- BOUNDARIES
- SITES
- ENVIRONMENT
- APS
- TRAFFIC ENG.
- AIR PHOTO
  - 2004 AIR PHOTO
  - 2002 AIR PHOTO
  - 1999 AIR PHOTO

Refresh Map

Auto Refresh

Help:
- Closed group, click to open.
- Open group, click to close.
- Map layer.
- Hidden group/layer, click for visible.
- Visible group/layer, click to hide.
- Layer not visible at this scale.
- Partially visible group, click for visible.
- Inactive layer, click for active.
- The active layer.

Zoom In SEARCH REFRESH HELP INDEX PAGE CONTACT

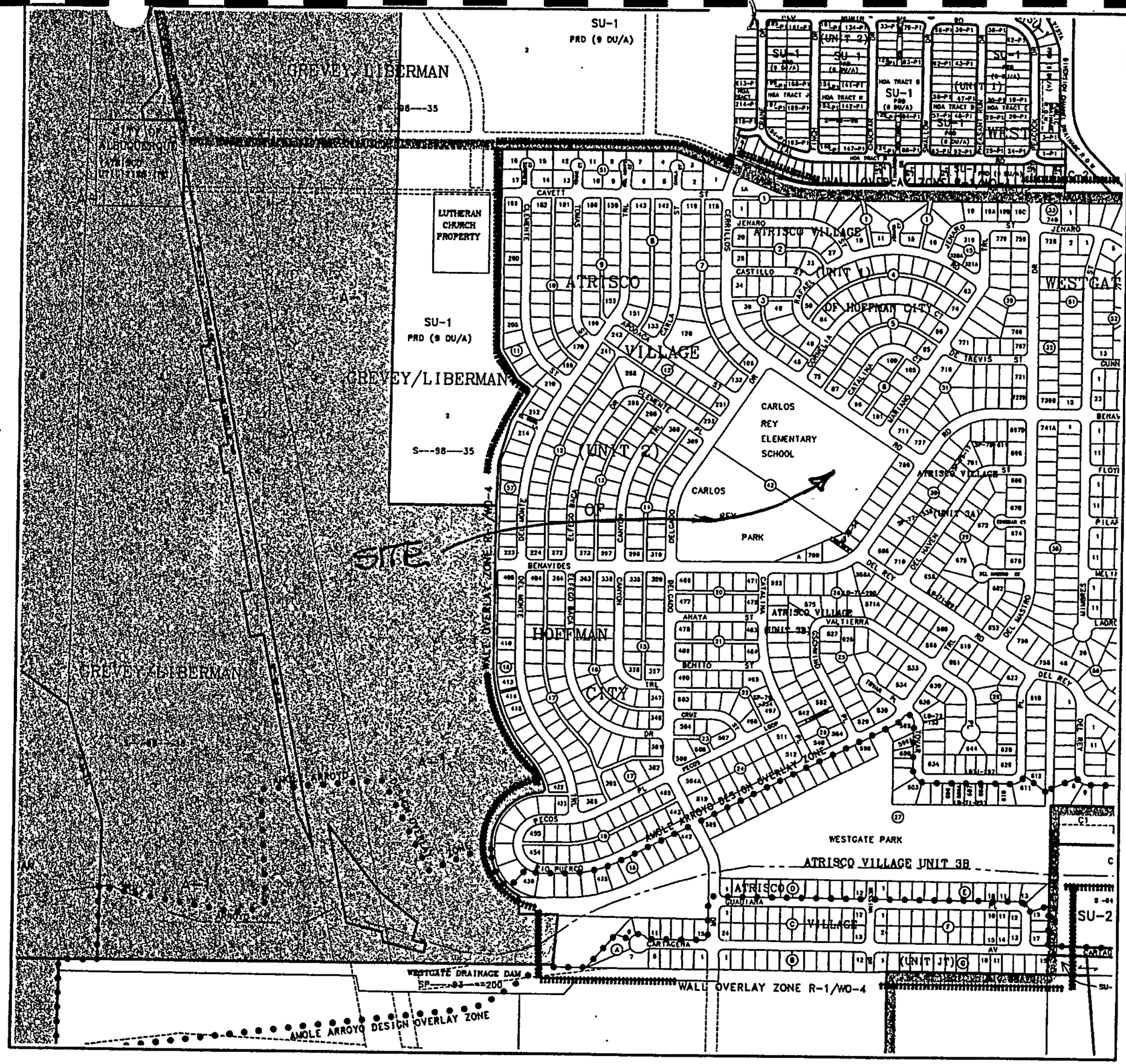

CITY OF Albuquerque

Albuquerque Geographic Information System

PLANNING DEPARTMENT

© Copyright 1999

AGIS

GRAPHIC SCALE IN FEET

250 0 500 1000

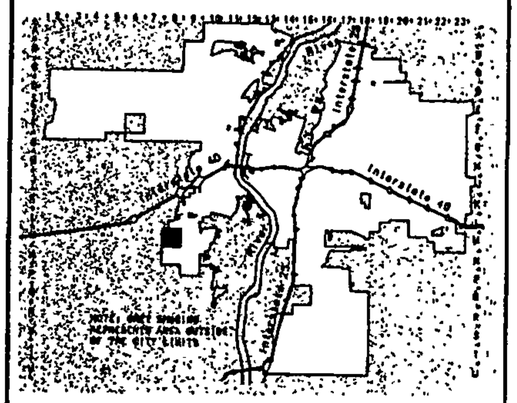

Zone Atlas Page

M-8-Z

Map Amended through
September 17, 1999

Proposed Drainage Management

The proposed on-site drainage management plan is to continue the surface flow pattern from west to east across the site using underground storm drain lines to remove runoff where building structures block surface flows. New hard surfaces on the site slope from west to east and much of the site developed flow is collected in onsite storm inlets and storm drain lines which in turn outfall in the existing retention pond located at the east end of the campus. the pond has silted over time and will be regraded in the new construction. The adjacent football/baseball field will continue to act as an overflow for excessive storm drain flows. This pond also collects storm drain flows from facilities in the adjacent Cerrillos Rd. system and the new construction will not affect this flow pattern.

Calculations

The weighted E method from the "City of Albuquerque Development Process Manual Volume 11 – Design Criteria, 1997 Revision" was used to calculate runoff volumes from the project site. The 10-day, 100-yr storm volume of runoff was calculated to be almost 86,000 cubic feet (an increase of approximately 11,000 CF) creating a minimum ponding need at the retention area almost up to the elevation of the 81 contour. The pond has a capacity of 100,950 cubic feet at this elevation. This contour is located in the football field, however, the lowest finished floor elevation of any structure on the site is no lower than 12 feet above this high water mark.

Summary

The site will be graded to direct surface runoff from west to east to match historic flow conditions. The new construction on the site will create more impermeable surfaces and therefore more developed runoff. This additional flow will be collected in the improved onsite drainage systems, both paved swales and underground storm drain lines, and conveyed to ponding facilities located at the east end of the site. The pond will be regraded to remove recent silting and add capacity. The athletic field adjacent to the pond will continue to serve as an overflow for heavy storm events and has ample capacity to protect the neighborhood from possible flooding conditions.

SECTION II

Runoff Calculations

Runoff
Calculations

Carlos Rey Elementary

ZONE 1

			DESIGN STORM: (IN)		1hr	6hr	24hr	4day	10day
					1.87	2.20	2.66	3.12	3.67

EXISTING CONDITIONS

LAND TRTMNT	AREA (ACRE)	AREA %	P6	Q (CFS/AC)	Q (CFS)	V6 (CF)	V24 (CF)	V4day (CF)	V10day (CF)
A	0.000	0%	0.44	1.29	0.00	0	0	0	0
B	2.221	29%	0.67	2.03	4.51	5,402	5,402	5,402	5,402
C	0.000	0%	0.99	2.87	0.00	0	0	0	0
D	5.554	71%	1.97	4.37	24.27	39,717	48,991	58,265	69,354
TOTALS	7.775	100%			28.78	45,119	54,393	63,667	74,756

PROPOSED CONDITIONS

LAND TRTMNT	AREA (ACRE)	AREA %	P6	Q (CFS/AC)	Q (CFS)	V6 (CF)	V24 (CF)	V4day (CF)	V10day (CF)
A	0.000	0%	0.44	1.29	0.00	0	0	0	0
B	1.110	14%	0.67	2.03	2.25	2,700	2,700	2,700	2,700
C	0.000	0%	0.99	2.87	0.00	0	0	0	0
D	6.665	86%	1.97	4.37	29.13	47,662	58,791	69,921	83,227
TOTALS	7.775	100%			31.38	50,362	61,491	72,620	85,927

Worksheet
Worksheet for Circular Channel

Project Description	
Worksheet	Circular Channel
Flow Element	Circular Channel
Method	Manning's Formu
Solve For	Discharge

Input Data		
Mannings Coeffic	0.010	
Slope	020000	ft/ft
Depth	1.41	ft
Diameter	18	in

Results		
Discharge	20.77	cfs
Flow Area	1.7	ft²
Wetted Perime	3.97	ft
Top Width	0.71	ft
Critical Depth	1.47	ft
Percent Full	94.0	%
Critical Slope	0.020792	ft/ft
Velocity	12.05	ft/s
Velocity Head	2.26	ft
Specific Energ	3.67	ft
Froude Numbe	1.37	
Maximum Disc	20.77	cfs
Discharge Full	19.31	cfs
Slope Full	0.023142	ft/ft
Flow Type	Supercritical	

© Haestad Methods, Inc.
Walla Engineering, Ltd.
37 Brookside Road Waterbury, CT 06708 USA (203) 755-1666

Worksheet
Worksheet for Circular Channel

Project Description	
Worksheet	Circular Channel
Flow Element	Circular Channel
Method	Manning's Formu
Solve For	Discharge

Input Data		
Mannings Coeffic	0.010	
Slope	020000	ft/ft
Depth	1.88	ft
Diameter	24	in

Results		
Discharge	44.74	cfs
Flow Area	3.1	ft²
Wetted Perime	5.29	ft
Top Width	0.95	ft
Critical Depth	1.97	ft
Percent Full	94.0	%
Critical Slope	0.020945	ft/ft
Velocity	14.60	ft/s
Velocity Head	3.31	ft
Specific Energ	5.19	ft
Froude Numbe	1.43	
Maximum Disc	44.74	cfs
Discharge Full	41.59	cfs
Slope Full	0.023142	ft/ft
Flow Type	Supercritical	

Walla ENGINEERING LTD
6100 Indian School Road NE • Suite 210
Albuquerque • New Mexico • 87110
881-3008 • Facsimile 881-4025

SHEET NO. ____ OF ____
JOB CARLOS REY ADD'N
SUBJECT ____
CLIENT HUTT-ZOLLARS JOB NO. ____
BY MJW DATE 10/2/06
CHECKED BY ____ DATE ____

POND CAPACITY

CONTOUR	SIZE	AREA	VOLUME	RUNNING TOTAL
76	92'x105'	9660 SF		
77	100'x120'	12,000	10830	10830
78	114x130'	14,820	13410	24240
79	130x140'	18,200	16510	40750
80	140'x220	30,800	24500	65250
81	145'x280	40600	35700	100,950 CF

100,950 CF

CITY OF ALBUQUERQUE

March 27, 2008

Mike J. Walla, P.E.
Walla Engineering, LTD
6100 Indian School Rd. NE Ste. 210
Albuquerque, NM 87110

Re: Carlos Rey Elementary School, 1215 Cerrillos Rd. SW,
Approval of Permanent Certificate of Occupancy (C.O.)
Engineer's Stamp dated 08/14/06 (M-08/D002)
Certification dated 3/24/08

Mr. Walla:

Based upon the information provided in your submittal received 3/27/08, the above referenced certification is approved for release of Permanent Certificate of Occupancy by Hydrology.

If you have any questions, you can contact me at 924-3982.

Sincerely,

Timothy E. Sims
Plan Checker-Hydrology,
Development and Building Services

C: CO Clerk—Katrina Sigala
File

PO Box 1293
Albuquerque
NM 87103
www.cabq.gov

DRAINAGE AND TRANSPORTATION INFORMATION SHEET
(REV. 1/28/2003rd)

M-08/D-002

PROJECT TITLE: CARLOS REY ELEM. ADD'N ZONE MAP/DRG. FILE #: M-8-Z
DRB #: _____ EPC#: _____ WORK ORDER#: _____

LEGAL DESCRIPTION: LOT 42, ATRISCO VILLAGE (UNIT 2), HOFFMAN CITY SUBDIVISION, ALBUQ, BERN. COU NM
CITY ADDRESS: 1215 CERRILLOS RD. SW, ALBUQ, NM 87121

ENGINEERING FIRM: WALLA ENGINEERING, LTD. CONTACT: MIKE J. WALLA, PE
ADDRESS: 6100 INNAN SCHOOL RD. NE PHONE: 881-3008
CITY, STATE: ALBUQ, NM ZIP CODE: 87110

OWNER: APS CONTACT: BOB BECKER
ADDRESS: 915 LOCUST ST. SE PHONE: 242-5065
CITY, STATE: ALBUQ, NM ZIP CODE: 87106

ARCHITECT: HUITT-ZOLLARS CONTACT: JOHN J. JABBARD
ADDRESS: 6501 AMERICAS PARKWAY NE. SE 550 PHONE: 883-8114
CITY, STATE: ALBUQ, NM ZIP CODE: 87110-5372

SURVEYOR: HUITT-ZOLLARS CONTACT: _____
ADDRESS _____ PHONE: _____
CITY, STATE: ABQ, NM ZIP CODE: _____

CONTRACTOR: TA COLE CONTACT: _____
ADDRESS: _____ PHONE: _____
CITY, STATE: _____ ZIP CODE: _____

CHECK TYPE OF SUBMITTAL:

- ___ DRAINAGE REPORT
- ___ DRAINAGE PLAN 1st SUBMITTAL, *REQUIRES TCL or equal*
- ___ DRAINAGE PLAN RESUBMITTAL
- ___ CONCEPTUAL GRADING & DRAINAGE PLAN
- ___ GRADING PLAN
- ___ EROSION CONTROL PLAN
- ✓ ENGINEER'S CERTIFICATION (HYDROLOGY)
- ___ CLOMR/LOMR
- ___ TRAFFIC CIRCULATION LAYOUT (TCL)
- ___ ENGINEERS CERTIFICATION (TCL)
- ___ ENGINEERS CERTIFICATION (DRB APPR. SITE PLAN)
- ___ OTHER

CHECK TYPE OF APPROVAL SOUGHT:

- ___ SIA / FINANCIAL GUARANTEE RELEASE
- ___ PRELIMINARY PLAT APPROVAL
- ___ S. DEV. PLAN FOR SUB'D. APPROVAL
- ___ S. DEV. PLAN FOR BLDG. PERMIT APPROVAL
- ___ SECTOR PLAN APPROVAL
- ___ FINAL PLAT APPROVAL
- ___ FOUNDATION PERMIT APPROVAL
- ___ BUILDING PERMIT APPROVAL
- ✓ CERTIFICATE OF OCCUPANCY (PERM.)
- ___ CERTIFICATE OF OCCUPANCY (TEMP.)
- ___ GRADING PERMIT APPROVAL
- ___ PAVING PERMIT APPROVAL
- ___ WORK ORDER APPROVAL
- ___ OTHER (SPECIFY)

RECEIVED
MAR 27 2008
HYDROLOGY SECTION

WAS A PRE-DESIGN CONFERENCE ATTENDED:

- ___ YES
- ✓ NO
- ___ COPY PROVIDED

DATE SUBMITTED: 3/27/08 BY: _____

Requests for approvals of Site Development Plans and/or Subdivision Plats shall be accompanied by a drainage submittal. The particular nature, location and scope of the proposed development defines the degree of drainage detail. One or more of the following levels of submittal may be required based on the following:

1. **Conceptual Grading and Drainage Plan:** Required for approval of Site Development Plans greater than five (5) acres and Sector Plans.
2. **Drainage Plans:** Required for building permits, grading permits, paving permits and site plans less than five (5) acres.
3. **Drainage Report:** Required for subdivisions containing more than ten (10) lots or constituting five (5) acres or more.

CITY OF ALBUQUERQUE

November 15, 2006

John Jarrard, R.A.
Huitt-Zollars, Inc.
6501 Americas Parkway NE, Suite 550
Albuquerque, NM 87110-5372

Re: Carlos Ray Elementary School New Classroom, Administration, and Kindergarten Addition and Renovation; 1215 Cerrillos Road SW; Traffic Circulation Layout Architect's Stamp dated 8-14-06 (M8-D2)

Dear Mr. Jarrard,

The TCL submittal received 11-07-06 is approved for Building Permit. The plan is stamped and signed as approved. A copy of this plan will be needed for each of the building permit plans. Please keep the original to be used for certification of the site for final C.O. for Transportation. **Public infrastructure or work done within City Right-of-Way shown on these plans is for information only and is not part of approval. A separate DRC and/or other appropriate permits are required to construct these items.**

If a temporary CO is needed, a copy of the original TCL that was stamped as approved by the City will be needed. This plan must include a statement that identifies the outstanding items that need to be constructed or the items that have not been built in "substantial compliance," as well as the signed and dated stamp of a NM registered architect or engineer. Submit this TCL with a completed Drainage and Transportation Information Sheet to Hydrology at the Development Services Center of Plaza Del Sol Building.

When the site is completed and a final C.O. is requested, use the original City stamped approved TCL for certification. A NM registered architect or engineer must stamp, sign, and date the certification TCL along with indicating that the development was built in "substantial compliance" with the TCL. Submit this certification TCL with a completed Drainage and Transportation Information Sheet to Hydrology at the Development Services Center of Plaza Del Sol Building.

Once verification of certification is completed and approved, notification will be made to Building Safety to issue Final C.O. To confirm that a final C.O. has been issued, call Building Safety at 924-3306.

Sincerely,

Kristal D. Metro, P.E.
Senior Engineer, Planning Dept.
Development and Building Services

cc: file

P.O. Box 1293
Albuquerque
New Mexico 87103
www.cabq.gov

DRAINAGE AND TRANSPORTATION INFORMATION SHEET
(Rev. 12/05)

PROJECT TITLE: CARLOS REY ES CLASSROOM ADDITION ZONE MAP/DRG. FILE # M-8-Z D2
DRB#: _____ EPC#: _____ WORK ORDER#: _____
UPC: 100805538828641718
LEGAL DESCRIPTION: LOT NO. 42/CARLOS REY E.S. BLOCK NO. 42 SUBDIVISION: ATRISCO VILLAGE
CITY ADDRESS: 1215 CERRILLOS ROAD S.W. 87121

ENGINEERING FIRM: WALLA ENGINEERING CONTACT: MIKE WALLA
ADDRESS: 6100 INDIAN SCHOOL RD. N.E. PHONE: 881-3008
CITY, STATE: ALBUQUERQUE, NM ZIP CODE: 87110

OWNER: ALBUQUERQUE PUBLIC SCHOOLS CONTACT: BOB BECKER
ADDRESS: 915 OAK ST. SE. PHONE: 848-8835
CITY, STATE: ALB. NM 87106 ZIP CODE: 87106

ARCHITECT: HUITT-ZOLLARS INC CONTACT: JOHN JARRATT
ADDRESS: 6501 AMERICAS PARKWAY NE PHONE: 883-8114
CITY, STATE: ALB. NM 87110 ZIP CODE: 87110

SURVEYOR: HUITT-ZOLLARS INC. CONTACT: JOHN JARRATT
ADDRESS: 6501 AMERICAS PARKWAY NE PHONE: 883-8114
CITY, STATE: ALB, NM 87110 ZIP CODE: 87110

CONTRACTOR: TA COLE CONTACT: SKIP COLE
ADDRESS: 10143 4th St. N.W. PHONE: 898-8698
CITY, STATE: ALB., N.M. 87114 ZIP CODE: 87114

TYPE OF SUBMITTAL:
_____ DRAINAGE REPORT
_____ DRAINAGE PLAN 1st SUBMITTAL
_____ DRAINAGE PLAN RESUBMITTAL
_____ CONCEPTUAL G & D PLAN
_____ GRADING PLAN
_____ EROSION CONTROL PLAN
_____ ENGINEER'S CERT (HYDROLOGY)
_____ CLOMR/LOMR
X TRAFFIC CIRCULATION LAYOUT
_____ ENGINEER/ARCHITECT CERT (TCL)
_____ ENGINEER/ARCHITECT CERT (DRB S.P.)
_____ ENGINEER/ARCHITECT CERT (AA)
_____ OTHER (SPECIFY)

CHECK TYPE OF APPROVAL SOUGHT:
_____ SIA/FINANCIAL GUARANTEE RELEASE
_____ PRELIMINARY PLAT APPROVAL
_____ S. DEV. PLAN FOR SUB'D APPROVAL
_____ S. DEV. FOR BLDG. PERMIT APPROVAL
_____ SECTOR PLAN APPROVAL
_____ FINAL PLAT APPROVAL
_____ FOUNDATION PERMIT APPROVAL
X BUILDING PERMIT APPROVAL
_____ CERTIFICATE OF OCCUPANCY (PERM)
_____ CERTIFICATE OF OCCUPANCY (TEMP)
_____ GRADING PERMIT APPROVAL
_____ PAVING PERMIT APPROVAL
_____ WORK ORDER APPROVAL
_____ OTHER (SPECIFY)

RECEIVED
NOV 07 2006
HYDROLOGY SECTION

WAS A PRE-DESIGN CONFERENCE ATTENDED:
_____ YES
X NO
_____ COPY PROVIDED

SUBMITTED BY: [signature] DATE: 11/3/06

Requests for approvals of Site Development Plans and/or Subdivision Plats shall be accompanied by a drainage submittal. The particular nature, location and scope to the proposed development define the degree of drainage detail. One or more of the following levels of submittal may be required based on the following:

1. **Conceptual Grading and Drainage Plan:** Required for approval of Site Development Plans greater than five (5) acres and Sector Plans.

2. **Drainage Plans:** Required for building permits, grading permits, paving permits and site plans less than five (5) acres.

3. **Drainage Report:** Required for subdivision containing more than ten (10) lots or constituting five (5) acres or more.

CITY OF
Albuquerque

P.O. Box 1293, Albuquerque, NM 87103

October 8, 1996

Martin J. Chávez, Mayor

Gary Bittner
Jeff Mortensen & Assoc
6010-B Midway Park Blvd NE
Albuquerque, NM 87109

RE: ENGINEER'S CERTIFICATION FOR CARLOS REY ELEMENTARY (M8-D2)
RECEIVED SEPTEMBER 10, 1996 FOR CERTIFICATE OF OCCUPANCY
ENGINEER'S STAMP DATED 09-09-96

Dear Mr. Bittner:

Based on the information included in the submittal referenced above, City Hydrology accepts the Engineer's Certification of Phase 2 for Certificate of Occupancy.

Contact Vicki Chavez at Code Enforcement to obtain the Certificate of Occupancy for the Carlos Rey Elementary School Multi-Purpose Facility at 1215 Cerrillos Road SW.

If I can be of further assistance, You may contact me at 768-2727.

Sincerely,

John P. Curtin

John P. Curtin, PE
Civil Engineer/Hydrology

c: Andrew Garcia
Bob Becker, APS, P.O. Box 25704, 87125

931136

DRAINAGE INFORMATION SHEET

PROJECT TITLE: CARLOS REY ELEM. SCHOOL MULTI-PURPOSE ZONE ATLAS/DRNG. FILE #: M8/42

DRB #: _____ EPC #: _____ WORK ORDER #: _____

LEGAL DESCRIPTION: PORTION OF BLOCK 42, ATRISCO VILLAGE

CITY ADDRESS: 1215 CERRILLOS RD SW

ENGINEERING FIRM: JEFF MORTENSEN & ASSOC. CONTACT: JEFF MORTENSEN

ADDRESS: 6010-B MIDWAY PARK BLVD NE PHONE: 345-4250

OWNER: APS / DFPC CONTACT: BOB BECKER

ADDRESS: _____ PHONE: 242-5865

ARCHITECT: PATRICK MCCLUSKNON CONTACT: PAT MCCLUSKNON

ADDRESS: 1401 5TH ST NW PHONE: 242-5219

SURVEYOR: JEFF MORTENSEN & ASSOC CONTACT: JEFF MORTENSEN

ADDRESS: 6010-B MIDWAY PARK BLVD NE PHONE: 345-4250

CONTRACTOR: GOAR CONSTRUCTION CONTACT: PAUL GOAR

ADDRESS: 1490 LILLIE DR PHONE: 869-2383
BOSQUE FARMS, 87068

TYPE OF SUBMITTAL:

____ DRAINAGE REPORT
____ DRAINAGE PLAN
____ CONCEPTUAL GRADING & DRAINAGE PLAN
____ GRADING PLAN
____ EROSION CONTROL PLAN
X ENGINEER'S CERTIFICATION
____ OTHER

Notified Rob that C.O. was OK. on 10-8-96
JPC

PRE-DESIGN MEETING:

____ YES
____ NO
____ COPY PROVIDED

CHECK TYPE OF APPROVAL SOUGHT:

____ SKETCH PLAT APPROVAL
____ PRELIMINARY PLAT APPROVAL
____ S. DEV. PLAN FOR SUB'D. APPROVAL
____ S. DEV. PLAN FOR BLDG. PERMIT APPROVAL
____ SECTOR PLAN APPROVAL
____ FINAL PLAT APPROVAL
____ FOUNDATION PERMIT APPROVAL
____ BUILDING PERMIT APPROVAL
X CERTIFICATE OF OCCUPANCY APPROVAL
____ GRADING PERMIT APPROVAL
____ PAVING PERMIT APPROVAL
____ S.A.D. DRAINAGE REPORT
____ DRAINAGE REQUIREMENTS
____ OTHER _____ (SPECIFY)

RECEIVED
SEP 10 1996
HYDROLOGY DIVISION

DATE SUBMITTED: 09-09-96

BY: JEFFREY G. MORTENSEN

CITY OF ALBUQUERQUE

THREE HUNDRED YEARS
1706 • 2006
ALBUQUERQUE
Making History

January 24, 2005

Scott Eddings, PE
Huitt-Zollars
333 Rio Rancho Dr. NE, Ste 101
Rio Rancho, NM 87124

Re: Carlos Rey Elementary School Grading and Drainage Plan
Engineer's Stamp dated 12-6-04, (M8/D2)

Dear Mr. Eddings,

Based on information contained in your submittal dated 12-16-04, the above referenced plan is approved for Building Permit. Please attach a copy of this approved plan to the construction sets prior to sign-off by Hydrology.

Also, prior to Certificate of Occupancy release, Engineer Certification of the grading plan per the DPM checklist will be required.

If you have any questions, you can contact me at 924-3986.

Sincerely,

Bradley L. Bingham, PE
Principal Engineer, Planning Dept.
Development and Building Services

C: file

P.O. Box 1293
Albuquerque
New Mexico 87103
www.cabq.gov

DRAINAGE AND TRANSPORTATION INFORMATION SHEET

(REV. 1/28/2003rd)

PROJECT TITLE: Kindergarten Addition - Carlos Rey ZONE MAP/DRG. FILE #: M-8/D2
DRB #: _____ EPC#: _____ WORK ORDER#: _____

LEGAL DESCRIPTION: _____
CITY ADDRESS: 1215 Cerrillos Rd S.W.

ENGINEERING FIRM: Huitt-Zollars CONTACT: Scott Eddings
ADDRESS: 333 Rio Rancho Blvd PHONE: 892-5141
CITY, STATE: Rio Rancho, NM ZIP CODE: 87124

OWNER: APS CONTACT: _____
ADDRESS: _____ PHONE: _____
CITY, STATE: _____ ZIP CODE: _____

ARCHITECT: Huitt-Zollars CONTACT: John Jarrard
ADDRESS: _____ PHONE: 883-8114
CITY, STATE: Alb, NM ZIP CODE: _____

SURVEYOR: _____ CONTACT: _____
ADDRESS _____ PHONE: _____
CITY, STATE: _____ ZIP CODE: _____

CONTRACTOR: Not Selected CONTACT: _____
ADDRESS: _____ PHONE: _____
CITY, STATE: _____ ZIP CODE: _____

CHECK TYPE OF SUBMITTAL:

X DRAINAGE REPORT
___ DRAINAGE PLAN 1st SUBMITTAL, *REQUIRES TCL or equal*
___ DRAINAGE PLAN RESUBMITTAL
___ CONCEPTUAL GRADING & DRAINAGE PLAN
___ GRADING PLAN
___ EROSION CONTROL PLAN
___ ENGINEER'S CERTIFICATION (HYDROLOGY)
___ CLOMR/LOMR
___ TRAFFIC CIRCULATION LAYOUT (TCL)
___ ENGINEERS CERTIFICATION (TCL)
___ ENGINEERS CERTIFICATION (DRB APPR. SITE PLAN)
___ OTHER

CHECK TYPE OF APPROVAL SOUGHT:

___ SIA / FINANCIAL GUARANTEE RELEASE
___ PRELIMINARY PLAT APPROVAL
___ S. DEV. PLAN FOR SUB'D. APPROVAL
___ S. DEV. PLAN FOR BLDG. PERMIT APPROVAL
___ SECTOR PLAN APPROVAL
___ FINAL PLAT APPROVAL
___ FOUNDATION PERMIT APPROVAL
X BUILDING PERMIT APPROVAL
___ CERTIFICATE OF OCCUPANCY (PERM.)
___ CERTIFICATE OF OCCUPANCY (TEMP.)
___ GRADING PERMIT APPROVAL
___ PAVING PERMIT APPROVAL
___ WORK ORDER APPROVAL
___ OTHER (SPECIFY)

RECEIVED
DEC 16 2004
HYDROLOGY SECTION

WAS A PRE-DESIGN CONFERENCE ATTENDED:

X YES
___ NO
___ COPY PROVIDED

DATE SUBMITTED: 12/16/04 BY: Scott Edd

Requests for approvals of Site Development Plans and/or Subdivision Plats shall be accompanied by a drainage submittal. The particular nature , location and scope ot the proposed development defines the degree of drainage detail. One or more of the following levels of submittal may be required based on the following:

1. **Conceptual Grading and Drainage Plan:** Required for approval of Site Development Plans greater than five (5) acres and Sector Plans.
2. **Drainage Plans:** Required for building permits, grading permits, paving permits and site plans less than five (5) acres.
3. **Drainage Report:** Required for subdivisions containing more than ten (10) lots or constituting five (5) acres or more.

JEFF MORTENSEN & ASSOCIATES, INC.

6010-B MIDWAY PARK BLVD. N.E.
ALBUQUERQUE NEW MEXICO 87109
ENGINEERS SURVEYORS (505) 345-4250
FAX 345-4254

TRANSMITTAL

VIA: ☒ DELIVERY ☐ PICKUP ☐ FAX

TO: HYDROLOGY	DATE: 10/03/96
	PROJECT: CARLOS ROY
CITY HALL	
	JOB NO: 931137
ATTN: JOHN CURTIN	
RE: DRAINAGE COVENANT	

WE ARE SENDING:

QTY.	DESCRIPTION	FOR
1	RED COPY	FILE

REMARKS:

BY:

RECEIVED:

DATE:

M8/D2

1010

931136

M08003

Q 95126922

DRAINAGE COVENANT

This Drainage Covenant, between The Board of Education, City of Albuquerque, Municipal School District No. 12, A Political Subdivision of the State of New Mexico ("Owner"), whose address is 725 University Ave. S.E., Albuquerque, NM 87125, and the City of Albuquerque, New Mexico municipal corporation ("City"), whose address is P. O. Box 1293, Albuquerque, New Mexico 87103, is made in Albuquerque, Bernalillo County, New Mexico and is entered into as of the date Owner signs this Covenant.

1. Recital. Owner is the owner of certain real property described as: Portion of Block 42, Atrisco Village, known as Carlos Rey Elementary School, 1215 Cerillos Road S.W., Albuquerque, NM 87121 in Bernalillo County, New Mexico (the "Property"); on plat of Atrisco Village Unit 1 filed on April 26, 1960 in Folio D02 Page 95.

Pursuant to City ordinances, regulations and other applicable laws, the Owner is required to construct and maintain certain Drainage Facilities on the Property, and the parties wish to enter into this Agreement to establish the obligations and responsibilities of the parties.

2. Description and Construction of Drainage Facilities. Owner shall construct the following "Drainage Facility" within the Property at Owner's sole expense in accordance with the standards, plans and specifications approved by the City pursuant to Drainage File No. M8-D2:
A Detention Pond with 8" Discharge Pipes, Concrete Spillway, and a Concrete Trickle Channel as shown on the approved Grading and Drainage Plan (M8/D2) dated May 15, 1995

The Drainage Facility is more particularly described in the attached Exhibit A. The Owner will not permit the Drainage Facility to constitute a hazard to the health or safety of the general public.

3. Maintenance of Drainage Facility. The Owner will maintain the Drainage Facility at Owner's cost in accordance with the approved Drainage Report and plans.

4. City's Right of Entry. The City has the right to enter upon the Property at any time and perform whatever inspection, maintenance or repair of the Drainage Facility it deems appropriate, without liability to the Owner.

5. Demand for Construction or Repair. The City may send written notice ("Notice") to the Owner requiring the Owner to construct or repair the Drainage Facility within 30 days ("Deadline") of receipt of the Notice, as provided in Section 11, and the Owner will comply promptly with the requirements of the Notice. The Owner will perform all required work by the Deadline, at Owner's sole expense.

6. Failure to Perform by Owner and Emergency Work by City. If the Owner fails to comply with the terms of the Notice by the Deadline, or if the City determines that an emergency condition exists, the City may perform the work itself. The City may assess the Owner for the cost of the work and for any other expenses or damages which result from Owner's failure to perform. The Owner agrees promptly to pay the City the amount assessed. If the Owner fails to pay the City within thirty (30) days after the City gives the Owner written notice of the amount due, the City may impose a lien against Owner's Property for the total resulting amount.

(Approved by Legal Dept.
as to form only 06/90)

7. Liability of City for Repair after Notice or as a Result of Emergency. The City shall not be liable to the Owner for any damages resulting from the City's repair or maintenance following notice to the Owner as required in this agreement or in an emergency unless the damages are the result of the reckless conduct or gross negligence of the City.

8. Indemnification. Owner agrees to indemnify and save the City, its officials, agents and employees harmless from all claims, actions, suits and proceedings arising out of or resulting from the Owner's negligent maintenance, construction, repair or use of the Drainage Facility. To the extent, if at all, Section 56-7-1 NMSA 1978 is applicable to this Agreement, this Agreement to indemnify will not extend to liability, claims, damages, losses or expenses, including attorney's fees, arising out of (1) the preparation or approval of maps, drawings, opinions, reports, surveys, change orders, designs or specifications by the indemnitee, or the agents or employees of the indemnitee; or (2) the giving of or the failure to give direction or instructions by the indemnitee, where such giving or failure to give directions or instructions is the primary cause of bodily injury to persons or damage to property.

9. Cancellation of Agreement and Release of Covenant. This Agreement may be released if the Drainage Facility is no longer required for the protection of the public health, safety and welfare by the City filing a "Notice of Release" with the Bernalillo County Clerk. The Notice of Release must be signed by the City's Chief Administrative Officer, or his designee, and the approval of the City Hydrologist must be endorsed thereon.

10. Assessment. Nothing in this agreement shall be construed to relieve the Owner, his heirs, assigns, and successors from an assessment against Owner's property for improvements to the property under a duly authorized and approved Special Assessment District. The parties specifically agree that the value of the Drainage Facility will not reduce the amount assessed by the City.

11. Notice. For purposes of given formal written notice to the Owner, Owner's address is:

Charles O. Atwood, Property Manager
Albuquerque Public Schools
P.O. Box 25704
Albuquerque, NM 87125

Notice may be given to the Owner either in person or by mailing the notice by regular U.S. mail, postage paid. Notice will be considered to have been received by the Owner within three days after the notice is mailed if there is no actual evidence of receipt. The Owner may change Owner's address by given written notice of the change by Certified Mail, return receipt requested, to the City Public Works Department, P. O. Box 1293, Albuquerque, New Mexico, 87103.

12. Term. This Agreement shall continue until terminated by the City pursuant to Section 9 above.

(Approved by Legal Dept.
as to form only 06/90)

13. Binding on Owner's Property. The covenants and obligations of the Owner said forth herein shall be binding on Owner, its heirs, personal representatives, assigns and successors and on Owner's Property and shall constitute covenants running the Owner's Property until released by the City.

14. Entire Agreement. This Agreement contains the entire agreement of the parties and supercedes any and all other agreements or understanding, oral or written, whether previous to the execution hereof or contemporaneous herewith regarding this subject matter.

15. Changes to Agreement. Changes to this Agreement are not binding unless made in writing, signed by both parties.

16. Construction and Severability. If any part of this Agreement is held to be invalid or unenforceable, the remainder of the Agreement will remain valid and enforceable if the remainder is reasonably capable of completion.

17. Captions. The captions to the sections or paragraphs of this Agreement are not part of this Agreement and will not affect the meaning or construction of any of its provisions.

OWNER:

By: _____
Its: School Business Officer
Dated: 11-20-95

STATE OF NEW MEXICO)
) ss
COUNTY OF BERNALILLO)

This instrument was acknowledged before me on 20th day of November, 1995, [by name of person:] D. J. Lyle, [title or capacity, for instance "president" or "owner":] School Business Officer of [Subdivider:] Albuquerque Public Schools.

Charles O. Atwood
Notary Public

My Commission Expires:
July 30, 1999

CITY OF ALBUQUERQUE:

Approved:

By: John P. Curtin
Title: For the City Engineer
Dated: 12-1-95

(EXHIBIT 'A' ATTACHED)

STATE OF NEW MEXICO
COUNTY OF BERNALILLO
FILED FOR RECORD

95 DEC 12 PM 2:40

95-30 K78-K81
JUDY ... AND
CLERK ...

(Approved by Legal Dept.
as to form only 06/90)

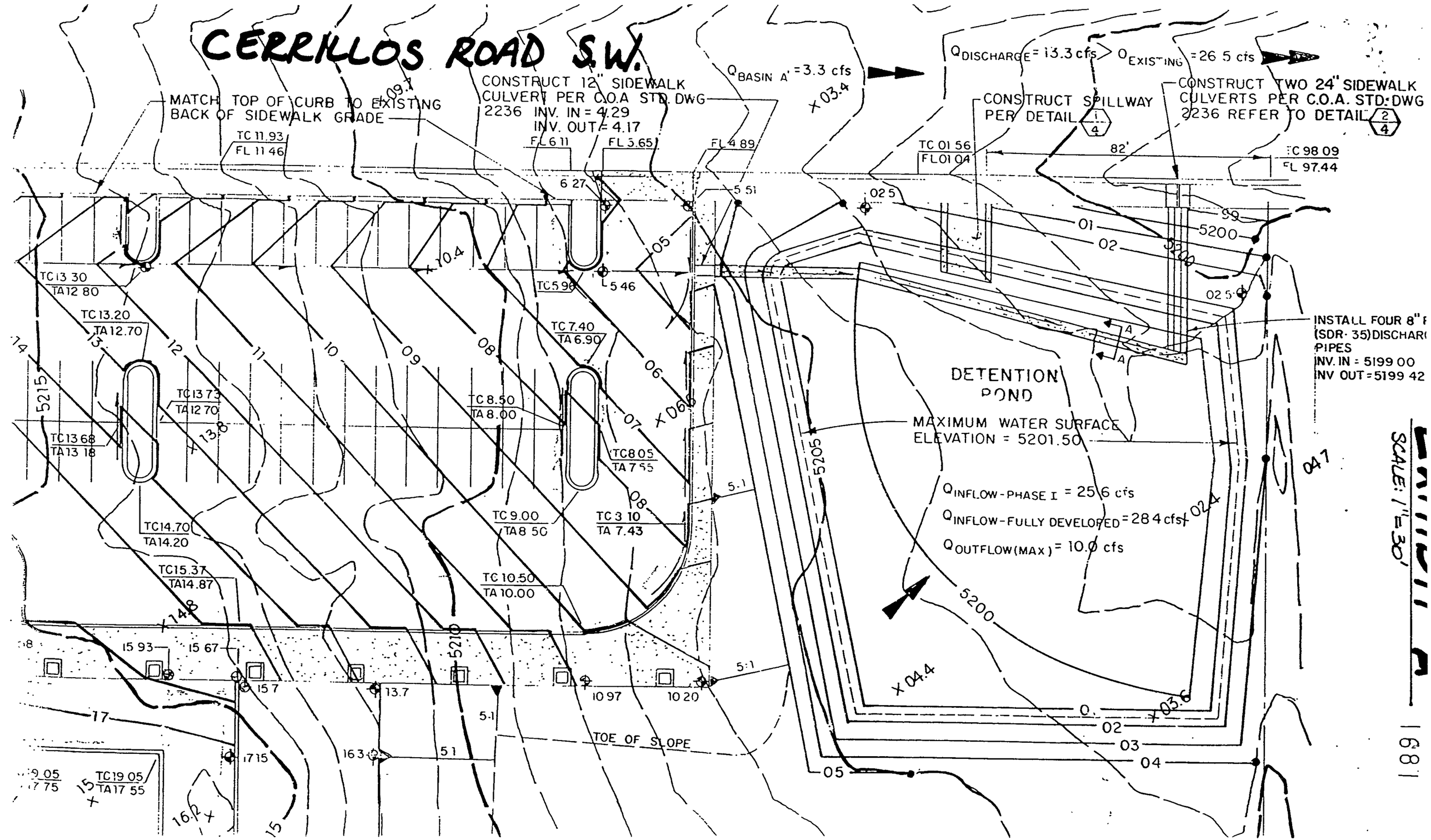
CERRILLOS ROAD S.W.
MATCH TOP OF CURB TO EXISTING BACK OF SIDEWALK GRADE
CONSTRUCT 12" SIDEWALK CULVERT PER C.O.A STD. DWG 2236 INV. IN = 4.29 INV. OUT = 4.17
Q BASIN A' = 3.3 cfs
Q DISCHARGE = 13.3 cfs > Q EXISTING = 26.5 cfs
CONSTRUCT SPILLWAY PER DETAIL 1/4
CONSTRUCT TWO 24" SIDEWALK CULVERTS PER C.O.A. STD. DWG 2236 REFER TO DETAIL 2/4
INSTALL FOUR 8" P (SDR-35) DISCHARG PIPES INV. IN = 5199.00 INV OUT = 5199.42
DETENTION POND
MAXIMUM WATER SURFACE ELEVATION = 5201.50
Q INFLOW-PHASE I = 25.6 cfs
Q INFLOW-FULLY DEVELOPED = 28.4 cfs
Q OUTFLOW(MAX) = 10.0 cfs
TOE OF SLOPE
TC 11.93 FL 11.46
TC 01.56 FL 01.04
TC 98.09 FL 97.44
TC 13.30 TA 12.80
TC 13.20 TA 12.70
TC 13.73 TA 12.70
TC 13.68 TA 13.18
TC 14.70 TA 14.20
TC 15.37 TA 14.87
TC 19.05 TA 17.55
TC 7.40 TA 6.90
TC 8.50 TA 8.00
TC 8.05 TA 7.55
TC 9.00 TA 8.50
TC 3.10 TA 7.43
TC 10.50 TA 10.00
FL 6.11
FL 5.65
FL 4.89
82'
5.1
SCALE: 1" = 30'

1681

City of Albuquerque
P.O. BOX 1293 ALBUQUERQUE, NEW MEXICO 87103

April 4, 1996

Gary Bittner
Jeff Mortensen & Assoc
6010-B Midway Park Blvd NE
Albuquerque, NM 87109

RE: ENGINEER'S CERTIFICATION FOR CARLOS REY ELEMENTARY (M8-D2)
RECEIVED MARCH 12, 1996 FOR CERTIFICATE OF OCCUPANCY
ENGINEER'S STAMP DATED 03-11-96

Dear Mr. Bittner:

Based on the information included in the submittal referenced above, City Hydrology accepts the Engineer's Certification for Phase 1. The following comments must be addressed before the Certificate of Occupancy will be released for Phase 2:

City Hydrology has not received a copy of the "green tag" for the S.O.19 nor has it received a copy of the recorded Drainage Covenant. Include these items with the Engineer's Certification for Phase 2.

If you have any questions about this project, You may contact me at 768-2727.

Sincerely,

John P. Curtin

John P. Curtin, PE
Civil Engineer/Hydrology

c: Andrew Garcia
Bob Becker, APS, P.O. Box 25704, 87125

THE CITY OF ALBUQUERQUE IS AN EQUAL OPPORTUNITY/REASONABLE ACCOMMODATION EMPLOYER

CITY OF ALBUQUERQUE

Planning Department
Transportation Development Services Section

March 31, 2008

John L. Jarrard, Registered Architect
6501 Amercias Pkwy NE, Ste. 550
Albuquerque, NM 87110-5372

Re: Certification Submittal for Final Building Certificate of Occupancy for Carlos Rey Elementary Classroom/Kindergarten Addition, [M-08 / D002]
1215 Cerrillos Road SW
Architect's Stamp Dated 03/31/08

Dear Mr. Jarrard:

The TCL / Letter of Certification submitted on March 31, 2008 is sufficient for acceptance by this office for final Certificate of Occupancy (C.O.). Notification has been made to the Building and Safety Section.

Sincerely,

Nilo E. Salgado-Fernandez, P.E.
Senior Traffic Engineer
Development and Building Services
Planning Department

c: Engineer
Hydrology file
CO Clerk

PO Box 1293

Albuquerque

NM 87103

www.cabq.gov

HUITT-ZOLLARS

HUITT-ZOLLARS, INC. • 6501 Americas Pkwy. NE • Suite 550 • Albuquerque, NM 87110-5372 • 505.883.8114 phone • 505.883.5022 fax • huitt-zollars.com

March 31, 2008

Ms. Kristal Metro, PE
Traffic Engineer
Transportation Development
City of Albuquerque
600 Second St. NW
Albuquerque, NM 87103

RE: Traffic Certification for
Carlos Rey Elementary School Classroom / Kindergarten Addition

Dear Ms. Metro:

11/15/06

I, John L. Jarrard, a registered architect in NM (# 1658), of the firm Huitt-Zollars, Inc. hereby certify that the above referenced project is in substantial compliance with and in accordance with the intent of the Traffic Circulation Layout approved plan dated ~~August 8, 2006~~. I further certify that I have personally visited the site on March 26, 2008 and have determined by visual inspection that the survey data provided is representative of actual site conditions and is true and correct to the best of my knowledge and belief. This certification is submitted in support of a request for Traffic Circulation Layout Certification.

The record information presented hereon is not necessarily complete and intended only to verify substantial compliance of the traffic aspects of the project. Those relying on the record document are advised to obtain independent verification of its accuracy before using it for any other purpose.

Sincerely,
Huitt-Zollars, Inc.

John L. Jarrard, AIA
Vice President

STATE OF NEW MEXICO
JOHN L. JARRARD
No. 1658
3-31-08
REGISTERED ARCHITECT

RECEIVED
MAR 3
HYDROLOGY SECTION

G:\proj\14023201\Construction Administration\Traffic Letter.doc

DRAINAGE AND TRANSPORTATION INFORMATION SHEET
(REV 12/2005)

M-08/D002

PROJECT TITLE: CARLOS REY ES ADDITION ZONE MAP: M-8-Z
DRB#: _____ EPC#: _____ WORK ORDER#: _____
LEGAL DESCRIPTION: UNIT: ONE OF HOFFMAN CITY LOT NO. 42/CARLOS REY ES., BLOCK NO. 42, SUBDIVISION: ATRISCO VILLAGE
CITY ADDRESS: 1215 CERRILLOS RD. SW ALB., NM

ENGINEERING FIRM: HUITT-ZOLLARS INC. CONTACT: JOHN JARRARD
ADDRESS: 6501 AMERICAS PARKWAY NE PHONE: 883-8114
CITY, STATE: ALB., NM 87110 ZIP CODE: 87110

OWNER: ALBUQUERQUE PUBLIC SCHOOLS CONTACT: DAVID RITCHEY
ADDRESS: 915 OAK STREET S.E. PHONE: 848-8835
CITY, STATE: ALB., NM 87106 ZIP CODE: _____

ARCHITECT: HUITT-ZOLLARS INC. CONTACT: JOHN JARRARD
ADDRESS: 6501 AMERICAS PARKWAY NE PHONE: 883-8114
CITY, STATE: ALBUQUERQUE, NM 87110 ZIP CODE: 87110

SURVEYOR: _____ CONTACT: _____
ADDRESS: _____ PHONE: _____
CITY, STATE: _____ ZIP CODE: _____

CONTRACTOR: _____ CONTACT: _____
ADDRESS: _____ PHONE: _____
CITY, STATE: _____ ZIP CODE: _____

TYPE OF SUBMITTAL:
- ____ DRAINAGE REPORT
- ____ DRAINAGE PLAN 1st SUBMITTAL
- ____ DRAINAGE PLAN RESUBMITTAL
- ____ CONCEPTUAL G & D PLAN
- ____ GRADING PLAN
- ____ EROSION CONTROL PLAN
- ____ ENGINEER'S CERT (HYDROLOGY)
- ____ CLOMR/LOMR
- X TRAFFIC CIRCULATION LAYOUT
- X ENGINEER'S CERT (TCL)
- ____ ENGINEER'S CERT (DRB SITE PLAN)
- ____ OTHER (SPECIFY)

CHECK TYPE OF APPROVAL SOUGHT:
- ____ SIA/FINANCIAL GUARANTEE RELEASE
- ____ PRELIMINARY PLAT APPROVAL
- ____ S. DEV. PLAN FOR SUB'D. APPROVAL
- ____ S. DEV. FOR BLDG. PERMIT APPROVAL
- ____ SECTOR PLAN APPROVAL
- ____ FINAL PLAT APPROVAL
- ____ FOUNDATION PERMIT APPROVAL
- ____ BUILDING PERMIT APPROVAL
- X CERTIFICATE OF OCCUPANCY (PERM)
- ____ CERTIFICATE OF OCCUPANCY (TEMP)
- ____ GRADING PERMIT APPROVAL
- ____ PAVING PERMIT APPROVAL
- ____ WORK ORDER APPROVAL
- ____ OTHER (SPECIFY)

RECEIVED
MAR 31 2008
HYDROLOGY SECTION

WAS A PRE-DESIGN CONFERENCE ATTENDED:
- ____ YES
- ____ NO
- ____ COPY PROVIDED

DATE SUBMITTED: 3-31-08 BY: _____

Requests for approvals of Site Development Plans and/or Subdivision Plats shall be accompanied by a drainage submittal. The particular nature, location, and scope to the proposed development defines the degree of drainage detail. One or more of the following levels of submittal may be required based on the following:

1. **Conceptual Grading and Drainage Plan:** Required for approval of Site Development Plans greater than five (5) acres and Sector Plans.
2. **Drainage Plans:** Required for building permits, grading permits, paving permits and site plans less than five (5) acres.
3. **Drainage Report:** Required for subdivision containing more than ten (10) lots or constituting five (5) acres or more.