CITY OF ALBUQUERQUE

March 11, 2009

Thomas D. Johnston, P.E.
TGC Engineering, Inc.
330 Louisiana Blvd. NE
Albuquerque, NM 87108

Re: Staybridge, 1350 Sunport Pl SE,
Approval of Permanent Certificate of Occupancy, (M-15/D023E)
Engineer's Stamp Date: 11-14-06
Certification Stamp Date: 3-04-09

Dear Mr. Johnston,

Based upon your submittal received 3/10/09, the above referenced certification is approved for release of Permanent Certificate of Occupancy by Hydrology.

If you have any questions, you can contact me at 924-3982.

Sincerely,

Timothy E. Sims
Plan Checker-Hydrology, Planning Dept
Development and Building Services

C: CO Clerk—Katrina Sigala
file

PO Box 1293
Albuquerque
NM 87103
www.cabq.gov

DRAINAGE AND TRANSPORTATION INFORMATION SHEET
(REV 12/2005)

PROJECT TITLE: STAYBRIDGE ZONE MAP: M15/D23E
DRB#: 1005021 EPC#: _____ WORK ORDER#: _____

LEGAL DESCRIPTION: LOT 4-A, BLOCK 4-B, SUNPORT PARK
CITY ADDRESS: 1350 SUNPORT PLACE SE

ENGINEERING FIRM: TGC ENGINEERING INC. CONTACT: THOMAS JOHNSTON
ADDRESS: 330 LOUISIANA BOULEVARD NE PHONE: 266-7256
CITY, STATE: ALBUQUERQUE NM ZIP CODE: 87108

OWNER: 786 SUNPORT LLC CONTACT: TADJIN GALLANI
ADDRESS: 12836 LOMAS BLVD NE PHONE: 275-8223
CITY, STATE: ALBUQUERQUE NM ZIP CODE: 87112

ARCHITECT: JIM MEDLEY CONTACT: _____
ADDRESS: 3100 CHRISTINE ST. NE PHONE: 292-3514
CITY, STATE: ALBUQUERQUE NM ZIP CODE: 87111

SURVEYOR: WAYJOHN SURVEYING INC. CONTACT: THOMAS JOHNSTON
ADDRESS: 330 LOUISIANA BLVD. NE PHONE: 255-2052
CITY, STATE: ALBUQUERQUE NM ZIP CODE: 87108

CONTRACTOR: TNJ CONSTRUCTION CONTACT: TADJIN GALLANI
ADDRESS: 12836 LOMAS NE PHONE: 275-8223
CITY, STATE: ALBUQUERQUE NM ZIP CODE: 87112

TYPE OF SUBMITTAL:
- _____ DRAINAGE REPORT
- _____ DRAINAGE PLAN 1st SUBMITTAL
- _____ DRAINAGE PLAN RESUBMITTAL
- _____ CONCEPTUAL G & D PLAN
- _____ GRADING PLAN
- _____ EROSION CONTROL PLAN
- X ENGINEER'S CERT (HYDROLOGY)
- _____ CLOMR/LOMR
- _____ TRAFFIC CIRCULATION LAYOUT
- _____ ENGINEER'S CERT (TCL)
- _____ ENGINEER'S CERT (DRB SITE PLAN)
- _____ OTHER (SPECIFY)

CHECK TYPE OF APPROVAL SOUGHT:
- _____ SIA/FINANCIAL GUARANTEE RELEASE
- _____ PRELIMINARY PLAT APPROVAL
- _____ S. DEV. PLAN FOR SUB'D APPROVAL
- _____ S. DEV. FOR BLDG. PERMIT APPROVAL
- _____ SECTOR PLAN APPROVAL
- _____ FINAL PLAT APPROVAL
- _____ FOUNDATION PERMIT APPROVAL
- _____ BUILDING PERMIT APPROVAL
- X CERTIFICATE OF OCCUPANCY (PERM)
- _____ CERTIFICATE OF OCCUPANCY (TEMP)
- _____ GRADING PERMIT APPROVAL
- _____ PAVING PERMIT APPROVAL
- _____ WORK ORDER APPROVAL
- _____ OTHER (SPECIFY)

RECEIVED
MAR 10 2009
HYDROLOGY SECTION

WAS A PRE-DESIGN CONFERENCE ATTENDED:
- _____ YES
- _____ NO
- _____ COPY PROVIDED

DATE SUBMITTED: 3.05.09 BY: THOMAS JOHNSTON

Requests for approvals of Site Development Plans and/or Subdivision Plats shall be accompanied by a drainage submittal. The particular nature, location, and scope to the proposed development defines the degree of drainage detail. One or more of the following levels of submittal may be required based on the following:

1. **Conceptual Grading and Drainage Plan:** Required for approval of Site Development Plans greater than five (5) acres and Sector Plans.
2. **Drainage Plans:** Required for building permits, grading permits, paving permits and site plans less than five (5) acres.
3. **Drainage Report:** Required for subdivision containing more than ten (10) lots or constituting five (5) acres or more.

TGC ENGINEERING, INC.
330 LOUISIANA BLVD. NE - ALBUQUERQUE, NM 87108-2062
(505) 266-7256 Fax: (505) 255-2887 - email: TGCENGINEERING.@aol.com

March 9, 2009

Staybridge Suites, 1350 Sunport SE, M-15/D-023E

Tim Sims
City of Albuquerque Hydrology
600 2nd Street NW
Plaza Del Sol Building
Albuquerque, NM 87102

Dear Tim:

I have received your comments regarding the Permanent Certificate of Occupancy regarding the above referenced project. I have addressed the following:

- The concrete drainage channel has been installed and an as-built is provided.
- I have contacted Jim Medley Architects regarding the ADA issue brought up by you regarding the water block. Since he is certifying the TCL, I will leave it up to him to determine whether the water block interferes with ADA access.

If you have any questions, please feel free to contact me at 505-266-7256.
Regards,

Thomas Johnston, PE
Project Engineer
TGC Engineering, Inc.
Attachments

RECEIVED
MAR 10 2009
HYDROLOGY
SECTION

CITY OF
Albuquerque

John Alexander
Bohannan-Huston, Inc.
7500 Jefferson St. NE
Albuquerque, New Mexico 87109

1400 Sunport Pl.

RE: ENGINEER CERTIFICATION FOR SUNPORT AMERISUITES (M-15/D23E1)
ENGINEER CERTIFICATION STATEMENT DATED 4/3/98.

Dear Mr Alexander:

Based on the information provided on your April 14, 1998 submittal, Engineer Certification for the above referenced site is acceptable.

If I can be of further assistance, please feel free to contact me at 924-3330.

C: File

Sincerely,

Andrew Garcia

Andrew Garcia
Drainage Inspector

CITY OF ALBUQUERQUE

Planning Department
Transportation Development Services Section

April 10, 2009

James N. Medley, Registered Architect
Jim Medley Architect
3100 Christine NE
Albuquerque, NM 87111-4824

Re: Certification Submittal for Final Building Certificate of Occupancy for Staybridge Suites, [M-15 / D023E]
1350 Sunport NE
Architect's Stamp Dated 04/10/09

PO Box 1293

Albuquerque

NM 87103

www.cabq.gov

Dear Mr. Medley:

The TCL / Letter of Certification submitted on April 10, 2009 is sufficient for acceptance by this office for final Certificate of Occupancy (C.O.). Notification has been made to the Building and Safety Section.

Sincerely,

Nilo E. Salgado-Fernandez, P.E.
Senior Traffic Engineer
Development and Building Services
Planning Department

c: Engineer
Hydrology file
CO Clerk

JIM MEDLEY, Architect

jmedley@jim-medley-architect.com -|- http://www.jim-medley-architect.com
3100 Christine NE -|- Albuquerque, NM 87111-4824 -|- Phone (505) 292-3514 -|- Fax (505) 294-5593

April 10, 2009

Traffic Department
City of Albuquerque
600 Second St. NW
Albuquerque, NM 87103

Re: Traffic Circulation Layout Certification
Staybridge Suites
1350 Sunport NE
Albuquerque, New Mexico

Gentlemen/Madams:

I, James N. Medley, NMRA, of Jim Medley, Architect AIA hereby certify that this project is in substantial compliance with and in accordance with the design intent of the DRB approved plan dated 10/04/06 by planning department. The record information edited onto the original design document has been obtained by Jim Medley, AIA of Jim Medley, Architect AIA, and have determined by visual inspection that the survey data provided is representative of of actual site conditions and is true and correct to the best of my knowledge and belief. This certification is submitted in support of a request for a final certification of occupancy.

Yours truly,

Jim Medley, Architect AIA

STATE OF NEW MEXICO
JAMES N.
MEDLEY
No.2042
REGISTERED ARCHITECT

RECEIVED
APR 10 2009
HYDROLOGY
SECTION

CITY OF ALBUQUERQUE

Planning Department
Transportation Development Services Section

April 6, 2009

James N. Medley, Registered Architect,
Jim Medley Architect
3100 Christine NE
Albuquerque, NM 87111-4824

Re: Approval of Temporary Certificate of Occupancy (C.O.) for
Staybridge Suites, [M-15 / D023E]
1350 Sunport NE
Architect's Stamp Dated 04/03/09

Dear Mr. Medley:

Based on the information provided on your submittal dated April 6, 2009, the above referenced project is approved for a 30-day Temporary C.O.

A Temporary C.O. has been issued allowing the certification language (see Attachment for sample of language) issue to be completed within this time period. When these remaining issues have been fully completed, are in substantial compliance, and a final Certification for Transportation has been resubmitted to the City's Hydrology office for approval, a Permanent C.O. will be issued.

The Certification package for Final C.O. must include an ***exact*** copy of the approved TCL, or signed off D.R.B. Site Plan, which is in each of the two City Permit Plan Sets—the contractor's City field set and the City's plan set in the basement of the Plaza Del Sol building. Package also must include a letter of certification on designer's letterhead-stamped with his seal, signed, and dated. Submit package along with fully completed Drainage Information Sheet to front counter personnel for log in and evaluation by Transportation.

If you have any questions, please call me at 924-3620.

Sincerely,

Nilo E. Salgado-Fernandez, P.E.
Senior Traffic Engineer
Development and Building Services
Planning Department

c: Engineer
Hydrology file
CO Clerk

PO Box 1293
Albuquerque
NM 87103
www.cabq.gov

DRAINAGE AND TRANSPORTATION INFORMATION SHEET
(REV 12/2005)

PROJECT TITLE: STAYBRIDGE ZONE MAP: M15/D23E
DRB#: 1005021 EPC#: WORK ORDER#:

LEGAL DESCRIPTION: LOT 4-A, BLOCK 4-B, SUNPORT PARK
CITY ADDRESS: 1350 SUNPORT PLACE SE

ENGINEERING FIRM: TGC ENGINEERING INC. CONTACT: THOMAS JOHNSTON
ADDRESS: 330 LOUISIANA BOULEVARD NE PHONE: 266-7256
CITY, STATE: ALBUQUERQUE NM ZIP CODE: 87108

OWNER: 786 SUNPORT LLC CONTACT: TADJIN GALLANI
ADDRESS: 12836 LOMAS BLVD NE PHONE: 275-8223
CITY, STATE: ALBUQUERQUE NM ZIP CODE: 87112

ARCHITECT: JIM MEDLEY CONTACT:
ADDRESS: 3100 CHRISTINE ST. NE PHONE: 292-3514
CITY, STATE: ALBUQUERQUE NM ZIP CODE: 87111

SURVEYOR: WALJOHN SURVEYING INC. CONTACT: THOMAS JOHNSTON
ADDRESS: 330 LOUISIANA BLVD. NE PHONE: 255-2052
CITY, STATE: ALBUQUERQUE NM ZIP CODE: 87108

CONTRACTOR: TNJ CONSTRUCTION CONTACT: TADJIN GALLANI
ADDRESS: 12836 LOMAS NE PHONE: 275-8223
CITY, STATE: ALBUQUERQUE NM ZIP CODE: 87112

TYPE OF SUBMITTAL:
- ____ DRAINAGE REPORT
- ____ DRAINAGE PLAN 1st SUBMITTAL
- ____ DRAINAGE PLAN RESUBMITTAL
- ____ CONCEPTUAL G & D PLAN
- ____ GRADING PLAN
- ____ EROSION CONTROL PLAN
- X ENGINEER'S CERT (HYDROLOGY)
- ____ CLOMR/LOMR
- ____ TRAFFIC CIRCULATION LAYOUT
- ____ ENGINEER'S CERT (TCL)
- X ENGINEER'S CERT (DRB SITE PLAN)
- ____ OTHER (SPECIFY)

CHECK TYPE OF APPROVAL SOUGHT:
- ____ SIA/FINANCIAL GUARANTEE RELEASE
- ____ PRELIMINARY PLAT APPROVAL
- ____ S. DEV. PLAN FOR SUB'D APPROVAL
- ____ S. DEV. FOR BLDG. PERMIT APPROVAL
- ____ SECTOR PLAN APPROVAL
- ____ FINAL PLAT APPROVAL
- ____ FOUNDATION PERMIT APPROVAL
- ____ BUILDING PERMIT APPROVAL
- X CERTIFICATE OF OCCUPANCY (PERM)
- ____ CERTIFICATE OF OCCUPANCY (TEMP)
- ____ GRADING PERMIT APPROVAL
- ____ PAVING PERMIT APPROVAL
- ____ WORK ORDER APPROVAL
- ____ OTHER (SPECIFY)

WAS A PRE-DESIGN CONFERENCE ATTENDED:
- ____ YES
- ____ NO
- ____ COPY PROVIDED

RECEIVED APR 06 2009 HYDROLOGY SECTION

RECEIVED MAR 10 2009 HYDROLOGY SECTION

DATE SUBMITTED: 3.05.09 BY: THOMAS JOHNSTON

Requests for approvals of Site Development Plans and/or Subdivision Plats shall be accompanied by a drainage submittal. The particular nature, location, and scope to the proposed development defines the degree of drainage detail. One or more of the following levels of submittal may be required based on the following:

1. **Conceptual Grading and Drainage Plan:** Required for approval of Site Development Plans greater than five (5) acres and Sector Plans.
2. **Drainage Plans:** Required for building permits, grading permits, paving permits and site plans less than five (5) acres.
3. **Drainage Report:** Required for subdivision containing more than ten (10) lots or constituting five (5) acres or more.

JIM MEDLEY, Architect
jmedley@jim-medley-architect.com -|- http://www.jim-medley-architect.com
3100 Christine NE -|- Albuquerque, NM 87111-4824 -|- Phone (505) 292-3514 -|- Fax (505) 294-5593

April 3, 2009

Traffic Department
City of Albuquerque
600 Second St. NW
Albuquerque, NM 87103

Re: Traffic Circulation Layout inspection
Staybridge Suites
1350 Sunport NE
Albuquerque, New Mexico

Gentlemen/Madams:

We made an on site inspection of the above referenced project on April 3, 2009, and found the site to be in substantial compliance with the approved site plan and permitted plan previously submitted. It is our conclusion that this site is in substantial compliance with all other requirements of the approved DRB reviewed and approved plans.

Thank you for the opportunity of working with you on this project

Yours truly,

Jim Medley, Architect AIA

STATE OF NEW MEXICO
JAMES N. MEDLEY
No.2042
REGISTERED ARCHITECT

RECEIVED
APR 06 2009
HYDROLOGY SECTION

BOHANNAN-HUSTON INC.
ENGINEERS ▪ PLANNERS ▪ PHOTOGRAMMETRISTS ▪ SURVEYORS ▪ LANDSCAPE ARCHITECTS
COURTYARD I, 7500 JEFFERSON NE, ALBUQUERQUE, NM 87109 TEL (505) 823-1000 FAX (505) 821-0892

CLIENT/COURIER TRANSMITTAL

To: Lisa Manwill
c/o Dolores--Lopez
COA,
Hydrology

Requested By: John Alexander
Date: 11-27-96
Time Due: ☒ This A.M. ☐ This P.M.
☐ Rush _____ ☐ By Tomorrow
Job No.: _____
Job Name: _____

DELIVERY VIA

☒ Courier ☐ Federal Express
☐ Mail ☐ UPS
☐ Other _____

PICK UP

Item: _____

ITEM NO.	QUANTITY	DESCRIPTION
1	1	cover letter
2	1	location map
3	1	information sheet
4		conceptual Drainage & Grading

COMMENTS / INSTRUCTIONS

Per your request:
Resubmittal of Sunport Amerisuites conceptual G&D sheet
Sorry for any confusion, have a great Holiday

John A.

(some P.E. exam - yikes)

Received By: D. Lopez Date: 11/27/96 Time: _____

RECEIVED
NOV 27 1996
HYDROLOGY DIVIS.

Misc/Courier Rqst Form 10/94

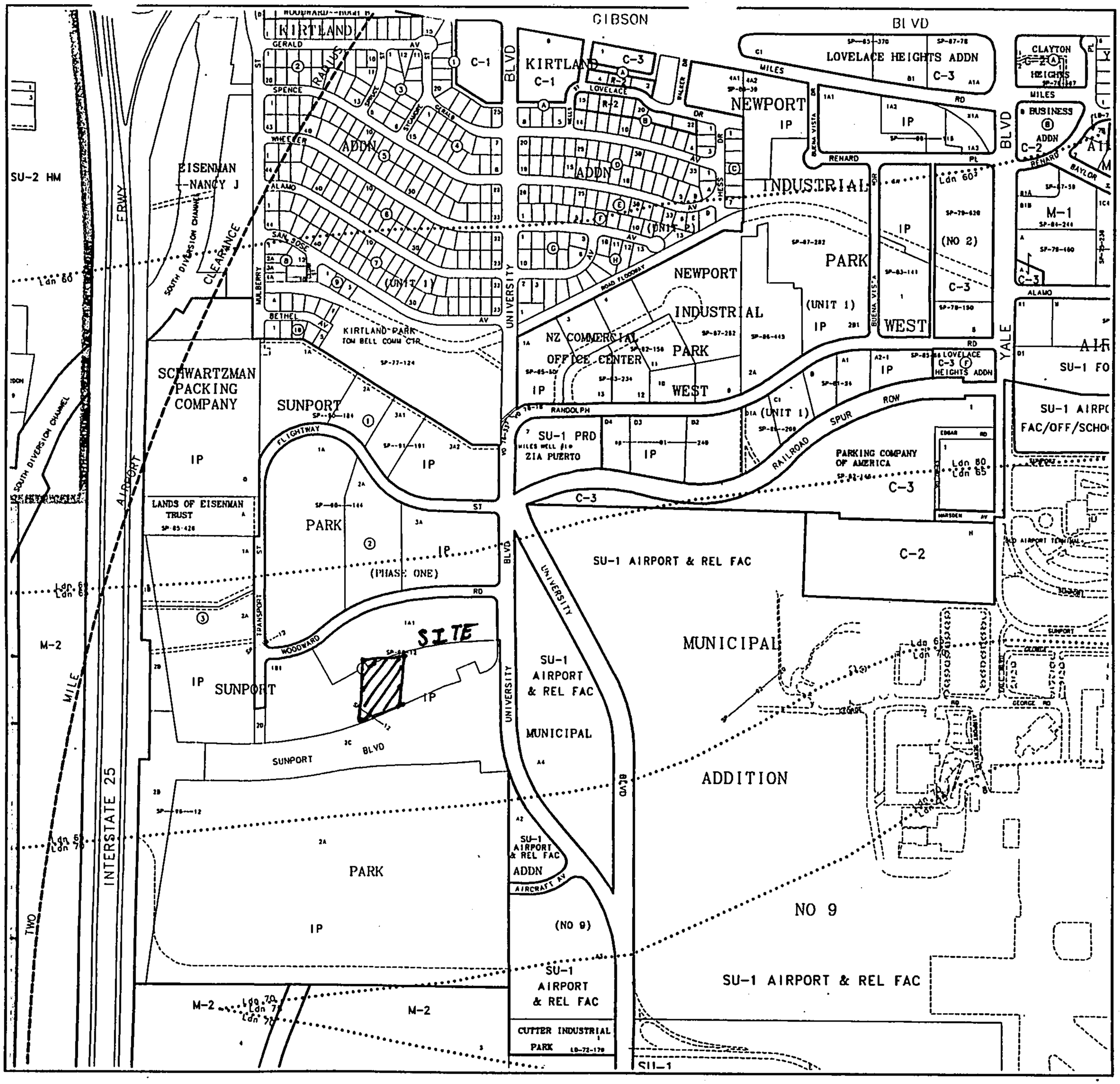

GRAPHIC SCALE IN FEET

250 0 500 1000

NOV 27

CITY OF Albuquerque

Albuquerque Geographic Information System

PLANNING DEPARTMENT

©Copyright 1996

Map Amended through April 19, 1996

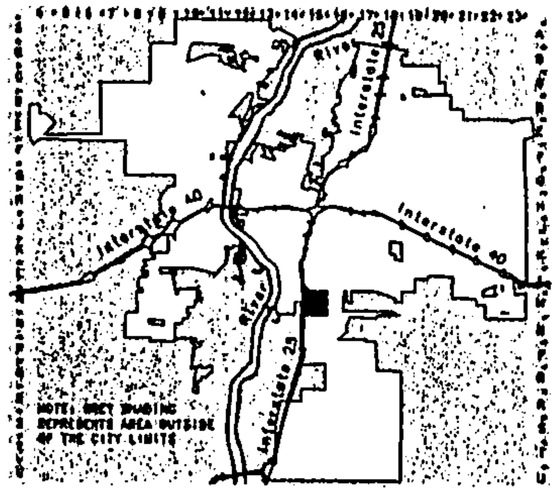

LEGAL DESCRIPTION

TION

R3E

SEC 33

UNIFORM PROPERTY CODE

1-015-055

M-15-Z

CITY OF ALBUQUERQUE

December 9, 2008

Thomas D. Johnston, P.E.
TGC Engineering, Inc.
330 Louisiana Blvd. NE
Albuquerque, NM 87108

Re: Staybridge Suites, 1350 Sunport Place SE,
Reject of Request of Permanent Certificate of Occupancy (C.O.)
Engineer's Stamp dated 11/14/06 (M-15/D023E)
Certification dated 11/26/08

Mr. Johnston,

PO Box 1293

Albuquerque

NM 87103

www.cabq.gov

Based upon the information provided in your submittal received 11/26/08, the above referenced certification cannot be approved until the following comments are addressed:

1. The concrete channel will need to be complete prior to Permanent C.O. Spot elevations and as—constructed conditions need to be reflected on the plan.
2. The water block appears to interfere with the ADA pathway across the entrance; please, coordinate with Transportation section for approval.

Prior to Permanent Certification of Occupancy, Engineer Certification of this plan per the DPM checklist will be required.

If you have any questions, you can contact me at 924-3982.

Sincerely,

Timothy E. Sims
Plan Checker, Hydrology
Development and Building Services

C: File

DRAINAGE AND TRANSPORTATION INFORMATION SHEET
(REV 12/2005)

PROJECT TITLE: STAYBRIDGE
ZONE MAP: M15/D23E
DRB#: 1005021 EPC#: _____ WORK ORDER#: _____

LEGAL DESCRIPTION: LOT 4-A, BLOCK 4-B, SUNPORT PARK
CITY ADDRESS: 1350 SUNPORT PLACE SE

ENGINEERING FIRM: TGC ENGINEERING INC.
ADDRESS: 330 LOUISIANA BOULEVARD NE
CITY, STATE: ALBUQUERQUE NM
CONTACT: THOMAS JOHNSTON
PHONE: 266-7256
ZIP CODE: 87108

OWNER: 786 SUNPORT LLC
ADDRESS: 12836 LOMAS BLVD NE
CITY, STATE: ALBUQUERQUE NM
CONTACT: TADJIN GALLANI
PHONE: 275-8223
ZIP CODE: 87112

ARCHITECT: JIM MEDLEY
ADDRESS: 3100 CHRISTINE ST. NE
CITY, STATE: ALBUQUERQUE NM
CONTACT: _____
PHONE: 292-3514
ZIP CODE: 87111

SURVEYOR: WALJOHN SURVEYING INC.
ADDRESS: 330 LOUISIANA BLVD. NE
CITY, STATE: ALBUQUERQUE NM
CONTACT: THOMAS JOHNSTON
PHONE: 255-2052
ZIP CODE: 87108

CONTRACTOR: TNJ CONSTRUCTION
ADDRESS: 12836 LOMAS NE
CITY, STATE: ALBUQUERQUE NM
CONTACT: TADJIN GALLANI
PHONE: 275-8223
ZIP CODE: 87112

TYPE OF SUBMITTAL:
- _____ DRAINAGE REPORT
- _____ DRAINAGE PLAN 1st SUBMITTAL
- _____ DRAINAGE PLAN RESUBMITTAL
- _____ CONCEPTUAL G & D PLAN
- _____ GRADING PLAN
- _____ EROSION CONTROL PLAN
- X ENGINEER'S CERT (HYDROLOGY)
- _____ CLOMR/LOMR
- _____ TRAFFIC CIRCULATION LAYOUT
- _____ ENGINEER'S CERT (TCL)
- _____ ENGINEER'S CERT (DRB SITE PLAN)
- _____ OTHER (SPECIFY)

CHECK TYPE OF APPROVAL SOUGHT:
- _____ SIA/FINANCIAL GUARANTEE RELEASE
- _____ PRELIMINARY PLAT APPROVAL
- _____ S. DEV. PLAN FOR SUB'D APPROVAL
- _____ S. DEV. FOR BLDG. PERMIT APPROVAL
- _____ SECTOR PLAN APPROVAL
- _____ FINAL PLAT APPROVAL
- _____ FOUNDATION PERMIT APPROVAL
- _____ BUILDING PERMIT APPROVAL
- X CERTIFICATE OF OCCUPANCY (PERM)
- _____ CERTIFICATE OF OCCUPANCY (TEMP)
- _____ GRADING PERMIT APPROVAL
- _____ PAVING PERMIT APPROVAL
- _____ WORK ORDER APPROVAL
- _____ OTHER (SPECIFY)

RECEIVED
NOV 26 2008
HYDROLOGY SECTION

WAS A PRE-DESIGN CONFERENCE ATTENDED:
- _____ YES
- _____ NO
- _____ COPY PROVIDED

UNIVERSITY & WOODWARD.

DATE SUBMITTED: 11.26.08 BY: THOMAS JOHNSTON

Requests for approvals of Site Development Plans and/or Subdivision Plats shall be accompanied by a drainage submittal. The particular nature, location, and scope to the proposed development defines the degree of drainage detail. One or more of the following levels of submittal may be required based on the following:

1. **Conceptual Grading and Drainage Plan:** Required for approval of Site Development Plans greater than five (5) acres and Sector Plans.
2. **Drainage Plans:** Required for building permits, grading permits, paving permits and site plans less than five (5) acres.
3. **Drainage Report:** Required for subdivision containing more than ten (10) lots or constituting five (5) acres or more.

CITY OF ALBUQUERQUE

November 20, 2006

Thomas D. Johnston, P.E.
TGC Engineering Inc.
330 Louisiana Blvd NE
Albuquerque, NM 87108

Re: Staybridge, Sunport Park, Drainage and Grading Plan
Engineer's Stamp dated 11-14-06 (M15/D23E)

Dear Mr. Johnston,

Based upon the information provided in your submittal received 11-16-06, the above referenced plan is approved for Building Permit. Please attach a copy of this approved plan to the construction sets prior to sign-off by Hydrology.

This project requires a National Pollutant Discharge Elimination System (NPDES) permit. If you have any questions, please free to call the Municipal Development Department Hydrology Section at 768-3654 (Sertil Kanbar).

Also, prior to Certificate of Occupancy release, Engineer Certification per the DPM checklist will be required.

If you have any questions, you can contact me at 924-3981.

Sincerely,

Curtis A. Cherne

Curtis A. Cherne, E.I.
Engineering Associate, Planning Dept.
Development and Building Services\

C: file
Sertil Kanbar, DMD

P.O. Box 1293
Albuquerque
New Mexico 87103
www.cabq.gov

CITY OF ALBUQUERQUE

October 31, 2006

Thomas D. Johnston, P.E.
TGC Engineering Inc.
330 Louisiana Blvd NE
Albuquerque, NM 87108

Re: Staybridge, Sunport Park, Drainage and Grading Plan
Engineer's Stamp dated 10-27-06 (M15/D23E)

Dear Mr. Johnston,

Based upon the information provided in your submittal received 10-27-06, the above referenced plan cannot be approved for Building Permit until the following comments are addressed:

- Runoff from this site is to enter an inlet at the southwest corner of this property to be conveyed to the storm drain. The inlet is most likely buried under sediment. See fax sent 10-31-06 for location and type of inlet.
- Provide a water block in the drivepad on Woodward Road.
- It appears that the existing concrete channel on the southern end of the property is 14" deep per with an invert of 5106.80 at the property line.

If you have any questions, you can contact me at 924-3981.

Sincerely,

Curtis A. Cherne, E.I.
Engineering Associate, Planning Dept.
Development and Building Services\

C: file

P.O. Box 1293
Albuquerque
New Mexico 87103
www.cabq.gov

CITY OF ALBUQUERQUE

August 30, 2006

Thomas D. Johnston, P.E.
TGC Engineering Inc.
330 Louisiana Blvd NE
Albuquerque, NM 87108

Re: Staybridge, Sunport Park, Drainage and Grading Plan
Engineer's Stamp dated 8-24-06 (M15/D23E)

Dear Mr. Johnston,

Based upon the information provided in your submittal received 8-24-06, the above referenced plan cannot be approved for Building Permit until the following comments are addressed:

- As mentioned in the last letter, verify the existence of the inlet and a 30" RCP connected to the manhole in Transport Street. Runoff from this site is to be conveyed in this manner.
- As mentioned in the last letter, the maintenance road needs to be restored.
- Provide inverts, details and calculations for the concrete rundowns.
- Provide a drain in the trash enclosure to collect runoff from the trash enclosure.
- Provide spot elevations on sidewalks around the building and flowline elevations in the drive/parking areas as well as in Woodward Rd.
- It appears that the east parking lot is graded to drain directly west into the building.
- There is more than one drainage basin on this property. Divide the property into appropriate drainage basins and reflect this division in the calculations.
- The curb is drawn with double lines in some areas and a single line in others. What is the significance of the different line types?
- Retaining walls need to be shown accurately in the legend.
- A different scale may be necessary to show the detail required to obtain a Building Permit.

If you have any questions, you can contact me at 924-3981.

Sincerely,

Curtis A. Cherne, E.I.
Engineering Associate, Planning Dept.
Development and Building Services

C: file

P.O. Box 1293

Albuquerque

New Mexico 87103

www.cabq.gov

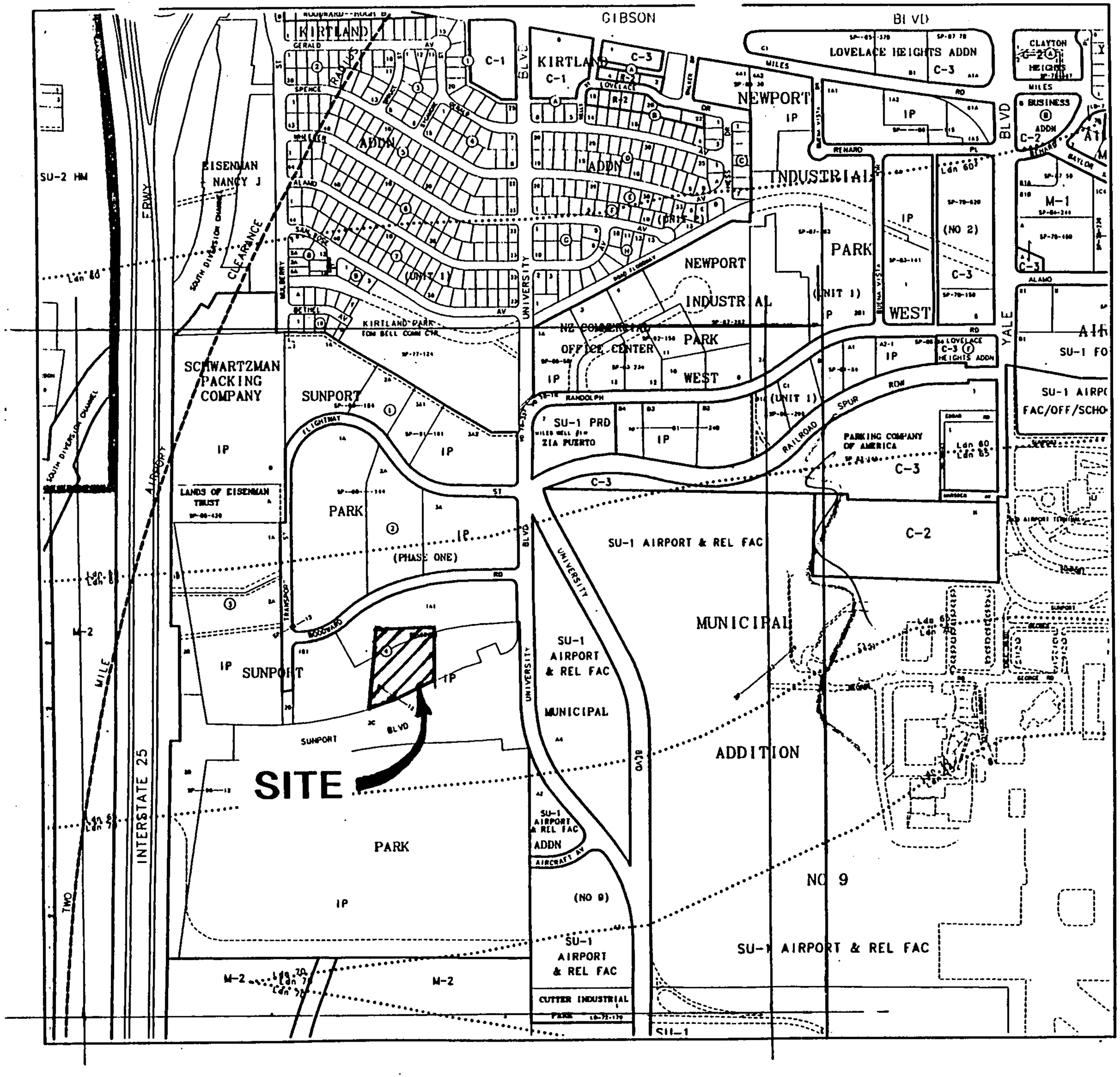

GRAPHIC SCALE IN FEET

250 0 500 1000

NOV 15

CITY OF Albuquerque

Albuquerque Geographic Information System

PLANNING DEPARTMENT

©Copyright 1996

Map Amended through April 19, 1996

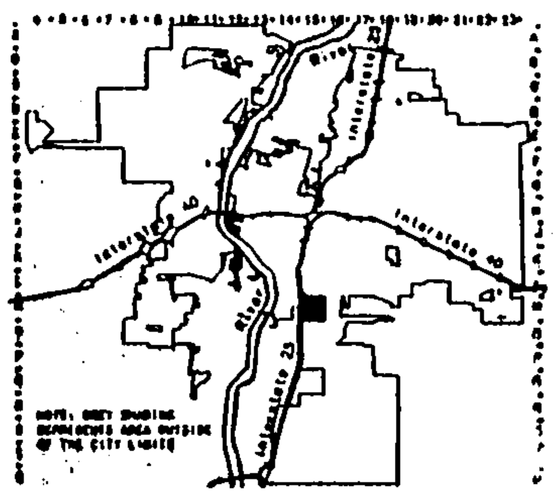

LEGAL DESCRIPTION

T10N

R3E

SEC 33

UNIFORM PROPERTY CODE

1-010-056

M-15-Z

BOHANNAN-HUSTON INC.
COURTYARD I, 7500 JEFFERSON STREET, NE ALBUQUERQUE, NM 87109-4355
TEL (505) 823-1000 FAX (505) 821-0892

November 14, 1996

Fred Aguirre, P.E.
City Hydrologist
City of Albuquerque
PWD Hydrology
P.O. Box 1293
Albuquerque, NM 87103

Re: Sunport AmeriSuites Hotel, Conceptual Grading and Drainage Plan, DRB# 96-131

Dear Fred:

The purpose of this letter is to transmit to you the conceptual grading and drainage plan for the referenced hotel project within Sunport Business Park. This plan complies with the Sunport Park Drainage Plan that was submitted to your office on November 8, 1996 by Andrews Asbury & Roberts, Inc. (a copy of which is enclosed for reference). They also share the same DRB# 96-131 with our site development plan submitted on the same date to DRB.

We are requesting site development plan approval (for building permit) for the site plan to be heard at DRB on December 3, 1996. If you require any additional information or have any questions, please contact me or James Topmiller of this office.

Sincerely,

John Alexander

John Alexander, E.I.
Community Development
and Planning Group

JA/rac

Enclosures - Conceptual Grading & Drainage Plan
- Sunport Park Drainage Plan

cc: Peter A. Grieco, Ronald Schmidt & Associates, P.A.
John Andrews, Andrews, Asbury & Roberts, Inc.
Tom Sadlowski, Prime Hospitality Corp.
James R. Topmiller, Bohannan-Huston Inc.

NOV 15

K:\96316\A2413\Conceptual.doc - 11/14/96

PRINCIPALS
LARRY W. HUSTON, C.P. — KERRY L. DAVIS, P.E. — GEORGE RADNOVICH, R.L.A. — WILLIAM L. VREEKE, P.E.
MICHIAL M. EMERY, P.E. — LARRY A. LARRAÑAGA, P.E. — SILAS V. SUAZO — GORDON A. WALHOOD, JR., P.E.
BRIAN G. BURNETT, P.E. — HOWARD C. STONE, P.E. — JAMES R. TOPMILLER, P.E. — MARY E. CARTER

BOHANNAN-HUSTON INC.
ENGINEERS ▪ PLANNERS ▪ PHOTOGRAMMETRISTS ▪ SURVEYORS ▪ LANDSCAPE ARCHITECTS
COURTYARD I, 7500 JEFFERSON NE, ALBUQUERQUE, NM 87109 TEL (505) 823-1000 FAX (505) 821-0892

CLIENT/COURIER TRANSMITTAL

To: Fred Aguirre P.E.
C.O.A.
PWD Hydrology

Requested By: John Alexander
Date: 11-14-96
Time Due: ☐ This A.M. ☒ This P.M.
☐ Rush _____ ☐ By Tomorrow
Job No.: SUNPORT AMERISUITES
Job Name: C96316A2404

DELIVERY VIA

☒ Courier ☐ Federal Express
☐ Mail ☐ UPS
☐ Other _____

PICK UP

Item: _____

ITEM NO.	QUANTITY	DESCRIPTION
1	1	cover letter
2	1	Drainage Info sheet
3	1	Location Map
4	1	Conceptual Grading & Drainage Plan
5	1 set	Sunport Park site Dev. Plan for Subdivision

COMMENTS / INSTRUCTIONS

Received By: M. Lopez Date: 11/14/96 Time: _____

Misc/Courier Rqst Form 10/94

CITY OF
Albuquerque
Public Works Department

January 30, 1997

Martin J. Chávez, Mayor

Robert E. Gurulé, Director

John Alexander
Bohannan-Huston, Inc.
7500 Jefferson St. NE
Albuquerque, NM 87109

RE: SUNPORT AMERISUITES (M15-D23E). GRADING AND DRAINAGE PLAN FOR SITE DEVELOPMENT PLAN (FOR BUILDING PERMIT) AND BUILDING PERMIT APPROVAL. ENGINEER'S STAMP DATED 1-17-97.

Dear Mr. Alexander:

Based on the information provided on your January 21, 1997 submittal, the above referenced project is approved for Site Development Plan (for Building Permit) and Building Permit.

Prior to Certificate of Occupancy, an Engineer's Certification will be required.

If I can be of further assistance, please feel free to contact me at 924-3984.

Sincerely,

Lisa Ann Manwill
Engineering Assoc./Hyd.

c: Andrew Garcia
File

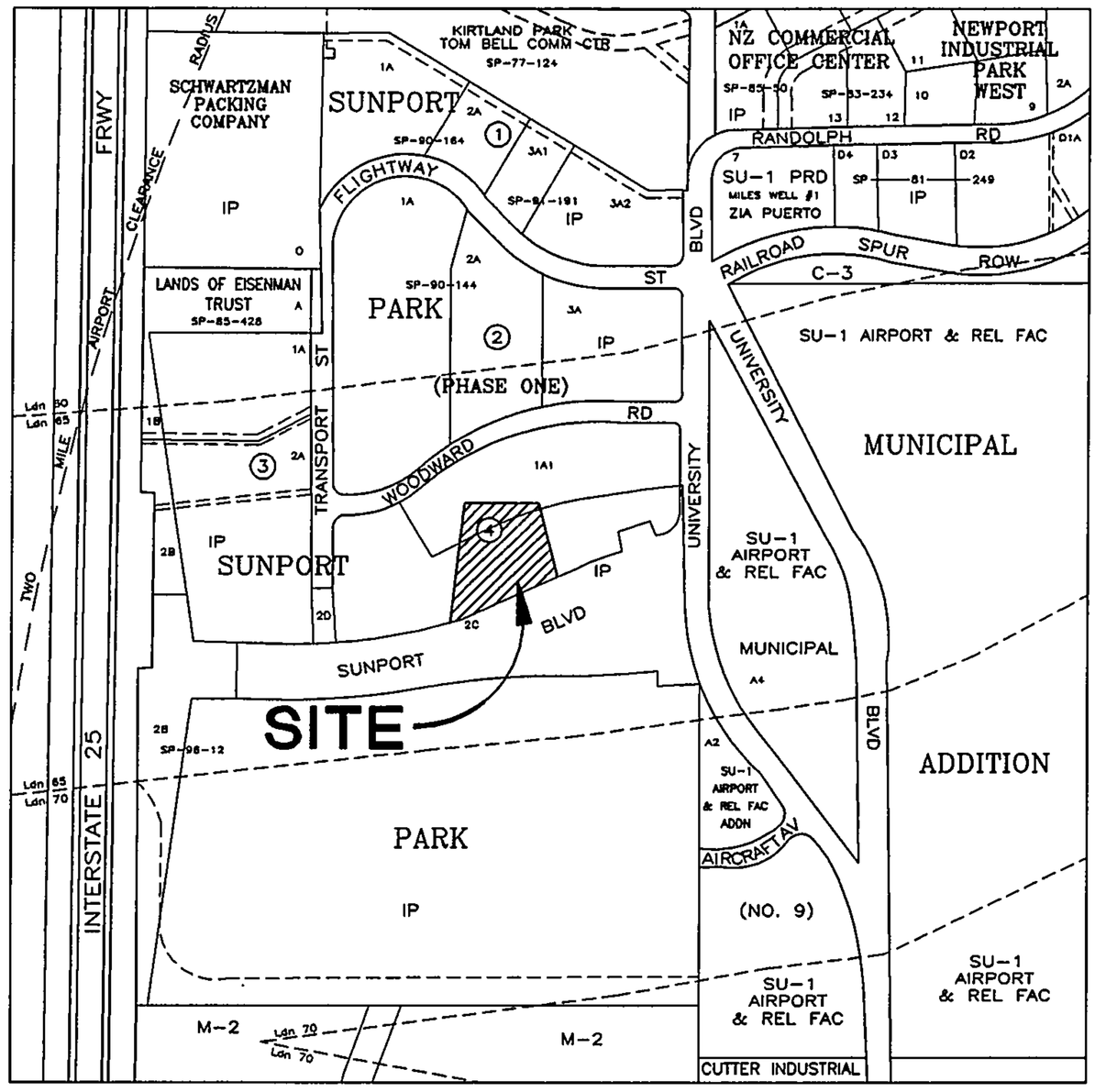

ZONE ATLAS MAP M-15-Z

DRAINAGE INFORMATION SHEET

PROJECT TITLE: SunPort AmeriSuites ZONE ATLAS/DRNG. FILE # M-15 / D23E

DRB #: 96-131 EPC #: _____ WORK ORDER #: _____

LEGAL DESCRIPTION: Lot 3 Parcel 1-B-1 Block 4 Sunport Business Park

CITY ADDRESS: 1400 Sunport Place

ENGINEERING FIRM: BOHANNAN HUSTON, INC. CONTACT: John Alexander

ADDRESS: 7500 JEFFERSON NE, ALB. NM 87109 PHONE: 823-1000

OWNER: Prime Hospitality Corp. CONTACT: Tom Sadlowski

ADDRESS: 700 E Route 46, Fairfield N.J. 07007 PHONE: 201 882 1010

ARCHITECT: Ronald Schmidt & Assoc. CONTACT: Peter Grieco

ADDRESS: 222 Grand Ave. Englewood N.J. 07631 PHONE: 201 567 5005

SURVEYOR: _____ CONTACT: _____

ADDRESS: _____ PHONE: _____

CONTRACTOR: _____ CONTACT: _____

ADDRESS: _____ PHONE: _____

TYPE OF SUBMITTAL:

- ____ DRAINAGE REPORT
- X DRAINAGE PLAN
- ____ CONCEPTUAL GRADING & DRAINAGE PLAN
- ____ GRADING PLAN
- ____ EROSION CONTROL PLAN
- ____ ENGINEER'S CERTIFICATION
- ____ OTHER

PRE-DESIGN MEETING:

- ____ YES
- ____ NO
- ____ COPY PROVIDED

CHECK TYPE OF APPROVAL SOUGHT:

- ____ SKETCH PLAT APPROVAL
- ____ PRELIMINARY PLAT APPROVAL
- ____ S. DEV. PLAN FOR SUB'D. APPROVAL
- ✓ S. DEV. PLAN FOR BLDG. PERMIT APPROVAL
- ____ SECTOR PLAN APPROVAL
- ____ FINAL PLAT APPROVAL
- ____ FOUNDATION PERMIT APPROVAL
- ✓ BUILDING PERMIT APPROVAL
- ____ CERTIFICATE OF OCCUPANCY APPROVAL
- ____ GRADING PERMIT APPROVAL
- ____ PAVING PERMIT APPROVAL
- ____ S.A.D. DRAINAGE REPORT
- ____ DRAINAGE REQUIREMENTS
- ____ OTHER _____ (SPECIFY)

RECEIVED FEB 14 1997 HYDROLOGY SECTION

DATE SUBMITTED: John C Alexander

BY: 2-13-97

CITY OF
Albuquerque

December 5, 1996

Martin J. Chávez, Mayor

John Alexander
Bohannan-Huston, Inc.
7500 Jefferson Street NE
Albuquerque, NM 87109

RE: SUNPORT AMERISUITES (M15-D23E). CONCEPTUAL GRADING AND DRAINAGE PLAN FOR SITE DEVELOPMENT PLAN FOR BUILDING PERMIT APPROVAL. ENGINEER'S STAMP DATED 11-14-96.

Dear Mr. Alexander:

Based on the information provided on your November 27, 1996 submittal, I am unable to approve the above referenced plan at this time. Per your letter dated November 26, 1996 you state that the Sunport Amerisuites complies with the Sunport Park Drainage plan. The Sunport Park project has not yet been approved by Hydrology. It is premature to grant approval for this project.

If I can be of further assistance, please feel free to contact me at 768-3622.

Sincerely,

Lisa Ann Manwill
Engineering Assoc./Hyd.

c: Andrew Garcia
File

CITY OF ALBUQUERQUE

July 27, 2006

Thomas D. Johnston, P.E.
TGC Engineering Inc.
330 Louisiana Blvd NE
Albuquerque, NM 87108

Re: Staybridge, Lot 4, Block 4-B Sunport Park, Drainage and Grading Plan Engineer's Stamp dated 7-20-06 (M15/D23E)

Dear Mr. Johnston,

Based upon the information provided in your submittal received 7-20-06, the above referenced plan is approved for Site Development Plan for Subdivision and Site Development for Building Permit action by the DRB.

Prior to Building Permit approval, the following comments need to be addressed:

- A channel needs to be extended near the south property line to convey the offsite runoff and runoff from this site. Verify the existence of the inlet and a 30" RCP connected to the manhole in Transport Street. Runoff from this site is to be conveyed in this manner.
- The maintenance road needs to be restored.
- Quantify offsite flows. ½ CD
- In addition to the developed calculations provided, provide calculations for developing the entire 213,647 sq. ft.

If you have any questions, you can contact me at 924-3981.

Sincerely,

Curtis A. Cherne, E.I.
Engineering Associate, Planning Dept.
Development and Building Services
BLB

C: file

P.O. Box 1293
Albuquerque
New Mexico 87103
www.cabq.gov

CITY OF
Albuquerque
Public Works Department

February 14, 1997

Robert E. Gurulé, Director

Martin J. Chávez, Mayor

John Alexander
Bohannan-Huston, Inc.
7500 Jefferson St. NE
Albuquerque, NM 87109

M15/D23E1

RE: SUNPORT AMERISUITES ~~(M15-D23E)~~. UPDATED GRADING AND DRAINAGE PLAN FOR SITE DEVELOPMENT PLAN (FOR BUILDING PERMIT) AND BUILDING PERMIT APPROVAL. ENGINEER'S STAMP DATED 2-13-97.

Dear Mr. Alexander:

Based on the updated information provided on your February 13, 1997 submittal, the above referenced project is approved for Site Development Plan (for Building Permit) and Building Permit.

Prior to Certificate of Occupancy, an Engineer's Certification will be required.

If I can be of further assistance, please feel free to contact me at 924-3984.

Sincerely,

Lisa-Ann Manwill
Engineering Assoc./Hyd.

c: Andrew Garcia
File

CITY OF
Albuquerque

November 19, 1996

Martin J. Chávez, Mayor

John Alexander
Bohannan-Huston, Inc.
7500 Jefferson St. NE
Albuquerque, NM 87109

RE: SUNPORT AMERISUITES (M15-D23E). CONCEPTUAL GRADING AND DRAINAGE PLAN FOR SITE DEVELOPMENT PLAN FOR BUILDING PERMIT APPROVAL.

Dear Mr. Alexander:

Based on the information provided on your November 15, 1996 submittal, City Hydrology has the following comments:

1. I am unable to verify your conclusions regarding this project, as it appears that the Sunport Park Drainage Master Plan has not yet been submitted to this office for review.

2. Please keep in mind that because a project is submitted to the Hydrology Division for Review does not mean it will be approved. In other words, when the Sunport Park Drainage Plan is reviewed, it may require changes prior to approval by the Hydrology Division.

If I can be of further assistance, please feel free to contact me at 768-3622.

Sincerely,

Lisa Ann Manwill
Engineering Assoc./Hyd.

c: Andrew Garcia
File

DRAINAGE INFORMATION SHEET

PROJECT TITLE: SUNPORT AMERISUITES ZONE ATLAS/DRNG. FILE # M-15-Z /023E

DRB #: 96-131 EPC #: _____ WORK ORDER #: _____

LEGAL DESCRIPTION: LOT 3, PARCEL 1-B-1, BLOCK 4 OF SUNPORT PARK

CITY ADDRESS: _____

ENGINEERING FIRM: BOHANNAN-HUSTON INC. CONTACT: JOHN ALEXANDER

ADDRESS: 7500 JEFFERSON NE, ALB. NM 87109 PHONE: (505) 823-1000

OWNER: PRIME HOSPITALITY CORP. CONTACT: TOM SADLOWSKI

ADDRESS: 700 ROUTE 46 EAST, FAIRFIELD NJ PHONE: (201) 882-1010

FAIRFIELD, NJ 07007

ARCHITECT: RONALD SCHMIDT & ASSOC., P.A. CONTACT: PETER GRIECO

ADDRESS: 222 GRAND AVE., ENGLEWOOD NJ PHONE: (201) 587-5005

ENGLEWOOD, NJ 07631

SURVEYOR: _____ CONTACT: _____

ADDRESS: _____ PHONE: _____

CONTRACTOR: _____ CONTACT: _____

ADDRESS: _____ PHONE: _____

TYPE OF SUBMITTAL:

- ____ DRAINAGE REPORT
- ____ DRAINAGE PLAN
- X CONCEPTUAL GRADING & DRAINAGE PLAN
- ____ GRADING PLAN
- ____ EROSION CONTROL PLAN
- ____ ENGINEER'S CERTIFICATION
- ____ OTHER

PRE-DESIGN MEETING:

- ____ YES
- X NO
- ____ COPY PROVIDED

11/14/96

CHECK TYPE OF APPROVAL SOUGHT:

- ____ SKETCH PLAT APPROVAL
- ____ PRELIMINARY PLAT APPROVAL
- ____ S. DEV. PLAN FOR SUB'D APPROVAL
- X S. DEV. PLAN FOR BLDG. PERMIT APPROVAL
- ____ SECTOR PLAN APPROVAL
- ____ FINAL PLAT APPROVAL
- ____ FOUNDATION PERMIT APPROVAL
- ____ BUILDING PERMIT APPROVAL
- ____ CERTIFICATE OF OCCUPANCY APPROVAL
- ____ GRADING PERMIT APPROVAL
- ____ PAVING PERMIT APPROVAL
- ____ S.A.D. DRAINAGE REPORT
- ____ DRAINAGE REQUIREMENTS
- ____ OTHER _____ (SPECIFY)

15

DATE SUBMITTED: NOVEMBER 14, 1996

BY: John C Alexander

K:\96316\C2404\Drn-Info.doc - 11/14/96

DRAINAGE INFORMATION SHEET

PROJECT TITLE: SUNPORT AMERISUITES ZONE ATLAS/DRNG. FILE # M-15-Z 423E

DRB #: 96-131 EPC #: _____ WORK ORDER #: _____

LEGAL DESCRIPTION: LOT 3, PARCEL 1-B-1, BLOCK 4 OF SUNPORT PARK

CITY ADDRESS: _____

ENGINEERING FIRM: BOHANNAN-HUSTON INC. CONTACT: JOHN ALEXANDER

ADDRESS: 7500 JEFFERSON NE, ALB. NM 87109 PHONE: (505) 823-1000

OWNER: PRIME HOSPITALITY CORP. CONTACT: TOM SADLOWSKI

ADDRESS: 700 ROUTE 46 EAST, FAIRFIELD NJ PHONE: (201) 882-1010

FAIRFIELD, NJ 07007

ARCHITECT: RONALD SCHMIDT & ASSOC., P.A. CONTACT: PETER GRIECO

ADDRESS: 222 GRAND AVE., ENGLEWOOD NJ PHONE: (201) 587-5005

ENGLEWOOD, NJ 07631

SURVEYOR: _____ CONTACT: _____

ADDRESS: _____ PHONE: _____

CONTRACTOR: _____ CONTACT: _____

ADDRESS: _____ PHONE: _____

TYPE OF SUBMITTAL:

- ____ DRAINAGE REPORT
- ____ DRAINAGE PLAN
- X CONCEPTUAL GRADING & DRAINAGE PLAN
- ____ GRADING PLAN
- ____ EROSION CONTROL PLAN
- ____ ENGINEER'S CERTIFICATION
- ____ OTHER

PRE-DESIGN MEETING:

- ____ YES
- X NO
- ____ COPY PROVIDED

CHECK TYPE OF APPROVAL SOUGHT:

- ____ SKETCH PLAT APPROVAL
- ____ PRELIMINARY PLAT APPROVAL
- ____ S. DEV. PLAN FOR SUB'D APPROVAL
- X S. DEV. PLAN FOR BLDG. PERMIT APPROVAL
- ____ SECTOR PLAN APPROVAL
- ____ FINAL PLAT APPROVAL
- ____ FOUNDATION PERMIT APPROVAL
- ____ BUILDING PERMIT APPROVAL
- ____ CERTIFICATE OF OCCUPANCY APPROVAL
- ____ GRADING PERMIT APPROVAL
- ____ PAVING PERMIT APPROVAL
- ____ S.A.D. DRAINAGE REPORT
- ____ DRAINAGE REQUIREMENTS
- ____ OTHER _____ (SPECIFY)

DATE SUBMITTED: NOVEMBER 26, 1996

BY: John Alexander

RECEIVED NOV 27 1996

\\Mickey\sec_cdp\96316\C2404\DRN-INFO.DOC - 11/26/96

LARRY W. HUSTON, C.P.
MICHIAL M. EMERY, P.E.
BRIAN G. BURNETT, P.E.
KERRY L. DAVIS, P.E.
LARRY A. LARRAÑAGA, P.E.
HOWARD C. STONE, P.E.
PRINCIPALS
WILLIAM L. VREEKE, P.E.
GORDON A. WALHOOD, JR., P.E.
MARY E. CARTER
GEORGE RADNOVICH, R.L.A.
SILAS V. SUAZO
JAMES R. TOPMILLER, P.E.

BOHANNAN-HUSTON INC.
COURTYARD I, 7500 JEFFERSON STREET, N.E. ALBUQUERQUE, NM 87109
TEL (505) 823-1000 FAX (505) 821-0892

November 26, 1996

Fred Aguirre, P.E.
c/o Lisa Manwill
City Hydrologist
City of Albuquerque
PWD Hydrology
P.O. Box 1293
Albuquerque, NM 87103

Re: Sunport AmeriSuites Hotel, Conceptual Grading and Drainage Plan, DRB# 96-131

Dear Fred:

The purpose of this letter is to resubmit to you the conceptual grading and drainage plan for the referenced hotel project within Sunport Business Park. This plan complies with the Sunport Park Drainage Plan that was submitted to your office in the week ending November 23, 1996, by Andrews, Asbury & Roberts, Inc. We also share the same DRB# 96-131 with Andrews, Asbury & Roberts, Inc., our site development plan, and their Sun Land Park Drainage Plan was submitted on the same date to DRB.

We are requesting site development plan approval (for building permit) for the site plan to be heard at DRB on December 10, 1996. If you require any additional information or have any questions, please contact me or James Topmiller of this office.

Sincerely,

John Alexander

John Alexander, E.I.
Community Development
and Planning Group

JA/rac

Enclosure - Conceptual Grading & Drainage Plan

cc: Peter A. Grieco, Ronald Schmidt & Associates, P.A.
John Andrews, Andrews, Asbury & Roberts, Inc.
Tom Sadlowski, Prime Hospitality Corp.
James R. Topmiller, Bohannan-Huston Inc.

RECEIVED
NOV 27 1996
HYDROLOGY DIVISION

K:\96316\A2413\CONCEPT2.doc - 11/26/96

CITY OF ALBUQUERQUE

November 20, 2008

James N. Medley, R.A.
Jim Medley Architect
3100 Christine NE
Albuquerque, NM 87111-4824

Re: Staybridge Suites, 13050 Sunport NE,
Approval of ~~Permanent~~ Certificate of Occupancy (C.O.)
(M-15/D023E) TEMP
Certification dated 11/19/08

Mr. Medley,

Based upon the information provided in your submittal received 11/20/08, the above referenced certification is approved for release of 30 Day Temporary Certificate of Occupancy by Transportation Development.

Prior to Permanent Certification, please, include the approved site plan with the drainage information sheet.

If you have any questions, you can contact me at 924-3986.

Sincerely,

Bradley L. Bingham, P.E.
City Hydrologist
Development and Building Services

C: CO Clerk-Katrina Sigala
File

PO Box 1293
Albuquerque
NM 87103
www.cabq.gov

CITY OF ALBUQUERQUE

November 20, 2008

Thomas D. Johnston, P.E.
TGC Engineering, Inc.
330 Louisiana Blvd. NE
Albuquerque, NM 8787108

Re: Staybridge Suites, 1350 Sunport NE,
(M-15/D023E)
Approval of 30-Day Temporary Certificate of Occupancy (C.O.),
Certification dated 11/20/08

Mr. Johnston,

Based upon a site visit on 11/20/08, the above referenced address is approved for release of 30-day Temporary Certificate of Occupancy by Hydrology.

Upon final Engineer Certification of project site, please resubmit an updated Certification for Permanent C.O.

If you have any questions, you can contact me at 924-3982.

Sincerely,

Bradley L. Bingham
City Hydrologist, Planning Dept
Development and Building Services

C: CO Clerk -- Katrina Sigala
file

PO Box 1293
Albuquerque
NM 87103
www.cabq.gov

JIM MEDLEY, Architect
jmedley@jim-medley-architect.com -|- http://www.jim-medley-architect.com
3100 Christine NE -|- Albuquerque, NM 87111-4824 -|- Phone (505) 292-3514 -|- Fax (505) 294-5593

November 19, 2008

Traffic Department
City of Albuquerque
600 Second St. NW
Albuquerque, NM 87103

Re: Traffic Circulation Layout inspection
Staybridge Suites
1350 Sunport NE
Albuquerque, New Mexico

Gentlemen/Madams:

We made an on site inspection of the above referenced project on November 19, 2008, and found the site to be in substantial compliance with the attached/approved site plan and permitted plans with the following exceptions:

- 6' sidewalk along the north and northeastern sides are not installed. They are on the restaurant site not in this contract.
- Signs for the motorcycle parking spaces are not installed.
- Entrance and exit signs at both entrances have not been installed.
- Bicycle rack has not been installed. INSTALLED! JM
- Fire lane lettering "no parking" was being painted on red fire lanes as we made our inspection.

It is our conclusion that this site is in substantial compliance with all other requirements of the approved TLC.

Thank you for the opportunity of working with you on this project

Yours truly,

STATE OF NEW MEXICO
JAMES N. MEDLEY
No.2042
REGISTERED ARCHITECT

Jim Medley, Architect AIA

30-DAY TEMP
BLB
11-20-08
HYD. & TRANSP.

ENG DATE: —
ARCH DATE: —

M-15/D023E

DRAINAGE INFORMATION SHEET

PROJECT TITLE: SUNPORT AMERISUITES ZONE ATLAS/DRNG. FILE # M-15-Z 2301

DRB #: 96-131 EPC #: _____ WORK ORDER #: _____

LEGAL DESCRIPTION: LOT 3 OF BLOCK 4 OF SUNPORT PARK, ALBUQUERQUE, NM

CITY ADDRESS: WOODWARD / Sunport Place

ENGINEERING FIRM: BOHANNAN-HUSTON INC. CONTACT: JOHN ALEXANDER

ADDRESS: 7500 JEFFERSON NE, ALB. NM 87109 PHONE: (505) 823-1000

OWNER: PRIME HOSPITALITIES CONTACT: TOM SADLOWSKI

ADDRESS: 700 ROUTE 46 EAST, FAIRFIELD NJ PHONE: 973-882-1010

ARCHITECT: _____ CONTACT: _____

ADDRESS: _____ PHONE: _____

SURVEYOR: _____ CONTACT: _____

ADDRESS: _____ PHONE: _____

CONTRACTOR: SUMMIT WEST BUILDERS CONTACT: ROBERT GALLEGOS

ADDRESS: _____ PHONE: 244-1575

TYPE OF SUBMITTAL:

- ____ DRAINAGE REPORT
- ____ DRAINAGE PLAN
- ____ FINAL GRADING & DRAINAGE PLAN
- ____ GRADING PLAN
- ____ EROSION CONTROL PLAN
- X ENGINEER'S CERTIFICATION
- ____ OTHER

PRE-DESIGN MEETING:

- ____ YES
- ____ NO
- ____ COPY PROVIDED

CHECK TYPE OF APPROVAL SOUGHT:

- ____ SKETCH PLAT APPROVAL
- ____ PRELIMINARY PLAT APPROVAL
- ____ S. DEV. PLAN FOR SUB=D. APPROVAL
- ____ S. DEV. PLAN FOR BLDG. PERMIT APPROVAL
- ____ SECTOR PLAN APPROVAL
- ____ FINAL PLAT APPROVAL
- ____ FOUNDATION PERMIT APPROVAL
- ____ BUILDING PERMIT APPROVAL
- X CERTIFICATE OF OCCUPANCY APPROVAL
- ____ GRADING PERMIT APPROVAL
- ____ PAVING PERMIT APPROVAL
- ____ S.A.D. DRAINAGE REPORT
- ____ DRAINAGE REQUIREMENTS
- ____ OTHER _____ (SPECIFY)

DATE SUBMITTED: 4/~~6~~13/98

BY: JOHN C. ALEXANDER, P.E.

RECEIVED
APR 14 1998
HYDROLOGY SECTION

P:\96316\cdp\C2492-drain cert\corres\DRAINAGE INFO SHT.doc - 04/07/98

BOHANNAN - HUSTON INC.

DRAINAGE INFORMATION SHEET

PROJECT TITLE: Sunport Amenities ZONE ATLAS/DRNG. FILE # M15/D23E

DRB #: 96-13 ERC #: WORK ORDER #:

LEGAL DESCRIPTION: Lot 3, Parcel 1-B-1, Block 4 Sunport Business Park

CITY ADDRESS:

ENGINEERING FIRM: BOHANNAN HUSTON, INC. CONTACT: John Alexander

ADDRESS: 7500 JEFFERSON NE, ALB. NM 87109 PHONE: 828-1000

OWNER: Prime Hospitality Corp CONTACT: Tom Sadlowski

ADDRESS: 700 E Route 46, Fairfield, NJ 07007 PHONE: 201/882-1010

ARCHITECT: Ronald Schmidt Assoc CONTACT: Peter Greco

ADDRESS: 222 Grand Ave Englewood, NJ 07631 PHONE: 201/567-5005

SURVEYOR: CONTACT:

ADDRESS: PHONE:

CONTRACTOR: CONTACT:

ADDRESS: PHONE:

TYPE OF SUBMITTAL:

- X DRAINAGE REPORT
- X DRAINAGE PLAN
- ___ CONCEPTUAL GRADING & DRAINAGE PLAN
- ___ GRADING PLAN
- ___ EROSION CONTROL PLAN
- ___ ENGINEER'S CERTIFICATION
- ___ OTHER

PRE-DESIGN MEETING:

- ___ YES
- ___ NO
- ___ COPY PROVIDED

CHECK TYPE OF APPROVAL SOUGHT:

- ___ SKETCH PLAT APPROVAL
- ___ PRELIMINARY PLAT APPROVAL
- ___ S. DEV. PLAN FOR SUB'D. APPROVAL
- ✓ S. DEV. PLAN FOR BLDG. PERMIT APPROVAL
- ___ SECTOR PLAN APPROVAL
- ___ FINAL PLAT APPROVAL
- ___ FOUNDATION PERMIT APPROVAL
- ✓ BUILDING PERMIT APPROVAL
- ___ CERTIFICATE OF OCCUPANCY APPROVAL
- ___ GRADING PERMIT APPROVAL
- ___ PAVING PERMIT APPROVAL
- ___ S.A.D. DRAINAGE REPORT
- ___ DRAINAGE REQUIREMENTS
- ___ OTHER _____ (SPECIFY)

Rec'd 1/21/97

DATE SUBMITTED: John Alexander

BY: 1-16-97

BOHANNAN-HUSTON INC.
ENGINEERS ▪ PLANNERS ▪ PHOTOGRAMMETRISTS ▪ SURVEYORS ▪ LANDSCAPE ARCHITECTS
COURTYARD I, 7500 JEFFERSON NE, ALBUQUERQUE, NM 87109 TEL (505) 823-1000 FAX (505) 821-0892

CLIENT/COURIER TRANSMITTAL

To: Lisa Ann Manwill
C.O.A.
P.W.D. Plaza Del Sol
Hydrology Dept.

Requested By: John Alexander
Date: 1-20-97
Time Due: ☐ This A.M. ☐ This P.M.
☐ Rush ☒ By Tomorrow
Job No.: 96316C 2404
Job Name:

DELIVERY VIA

☒ Courier ☐ Federal Express
☐ Mail ☐ UPS
☐ Other

PICK UP

Item:

ITEM NO.	QUANTITY	DESCRIPTION
1	1	cover letter
2	1	Drainage info sheet
3	1	Legal Discription & location Map.
4	1	Drainage Report - AmeriSuites Sanport

COMMENTS / INSTRUCTIONS

For your review.

Received By: Juna Pool *Date:* 1-21-97 *Time:*

Misc/Courier Rqst Form 10/94

BOHANNAN-HUSTON INC.
COURTYARD I, 7500 JEFFERSON STREET, NE ALBUQUERQUE, NM 87109-4355
TEL (505) 823-1000 FAX (505) 821-0892

January 16, 1997

Ms. Lisa Manwill
City of Albuquerque
PWD Hydrology
P.O. Box 1293
Albuquerque, NM 87103

Re: Resubmittal of Sunport AmeriSuites Hotel, Grading and Drainage Plan for Site Development Approval, DRB# 96-131 (M15/D23E)

Dear Lisa:

The purpose of this letter is to submit to you the Final Grading and Drainage Plan for the referenced hotel project within Sunport Business Park for review and approval. This plan complies with the Sunport Park Phase I Drainage Plan that was submitted to your office on January 6, 1997, by Andrews, Asbury & Roberts, Inc. We also share the same DRB# 96-131 with Andrews, Asbury & Roberts, Inc.

The basin map drawing has the drainage report text and summary of hydrologic data. Supplemental calculations have also been included for your review.

We are requesting site development plan approval (for building permit) and building permit approval for the site plan to be heard at DRB on January 21, 1997. If you require any additional information or have any questions, please contact me or James Topmiller of this office.

Sincerely,

John Alexander

John Alexander, E.I.
Community Development
and Planning Group

JA/lsp

Enclosures: Final Grading & Drainage Plan
Basin Map
Calculations

cc: Peter A. Grieco, Ronald Schmidt & Associates, P.A.
John Andrews, Andrews, Asbury & Roberts, Inc.
Tom Sadlowski, Prime Hospitality Corp.
James R. Topmiller, Bohannan-Huston Inc.

E:\96316\C2404\CONCEPT3 .DOC - 01/16/97

PRINCIPALS
LARRY W. HUSTON, C.P. KERRY L. DAVIS, P.E. GEORGE RADNOVICH, R.L.A. WILLIAM L. VREEKE, P.E.
MICHIAL M. EMERY, P.E. LARRY A. LARRAÑAGA, P.E. SILAS V. SUAZO GORDON A. WALHOOD, JR., P.E.
BRIAN G. BURNETT, P.E. HOWARD C. STONE, P.E. JAMES R. TOPMILLER, P.E. MARY E. CARTER

BOHANNAN-HUSTON INC.
COURTYARD I, 7500 JEFFERSON STREET, NE ALBUQUERQUE, NM 87109-4355
TEL (505) 823-1000 FAX (505) 821-0892

February 13, 1997

Ms. Lisa Ann Manwil P.E.
City of Albuquerque
Hydrology Division/PWD
P.O. Box 1293
Albuquerque, NM 87102

Re: Site Development Plan and Building Permit Approval, Sunport AmeriSuites

Dear Lisa:

The purpose of this letter is to submit to you a revised grading and drainage plan for Site Development Plan and Building Permit approval.

You previously approved the plan with engineer's stamp dated January 17, 1997. However, the architect had us adjust the roof storm drains. This plan shows those changes. I have enclosed a blueline with the changes highlighted. Please insert this copy of the grading plan into the Drainage Report you have on file.

Contact me when you are ready to sign the mylar and I will bring it down. If you have any questions, please call me at any time.

Sincerely,

John C Alexander

John Alexander, P.E.
Community Development
and Planning

JA/hjh
Enclosure

cc: James Topmiller, BHI

M:\96316\A2421\MANWIL LTR.DOC - 02/13/97

LARRY W. HUSTON, C.P. — KERRY L. DAVIS, P.E. — PRINCIPALS — GEORGE RADNOVICH, R.L.A. — WILLIAM L. VREEKE, P.E.
MICHIAL M. EMERY, P.E. LARRY A. LARRAÑAGA, P.E. SILAS V. SUAZO GORDON A. WALHOOD, JR., P.E.
BRIAN G. BURNETT, P.E. HOWARD C. STONE, P.E. JAMES R. TOPMILLER, P.E. MARY E. CARTER

DRAINAGE REPORT
SUNPORT AMERISUITES
AT SUNPORT BUSINESS PARK

JANUARY 1997

DRAINAGE REPORT
SUNPORT AMERISUITES
AT SUNPORT BUSINESS PARK

Prepared for:

Prime Hospitality Corp.
700 Route 46 East
Fairfield, NJ 07007

Prepared by:

BOHANNAN-HUSTON INC.
ENGINEERS • PLANNERS • PHOTOGRAMMETRISTS • SURVEYORS • LANDSCAPE ARCHITECTS
COURTYARD I, 7500 JEFFERSON NE, ALBUQUERQUE, NM 87109 TEL (505) 823-1000 FAX (505) 821-0892
ALBUQUERQUE LAS CRUCES SANTA FE

DRAINAGE REVIEW OF THE SUNPORT AMERISUITES AT SUNPORT BUSINESS PARK

JANUARY 1997

PREPARED BY:

BOHANNAN-HUSTON INC.
COURTYARD I, 7500 JEFFERSON STREET N.E.
ALBUQUERQUE, NM 87109

PREPARED FOR:

PRIME HOSPITALITY CORP.
700 ROUTE 46 EAST
FAIRFIELD, NJ 07007

PREPARED BY:

John C Alexander 1-17-97

John Alexander, E.I. **Date**

UNDER THE SUPERVISION OF:

James Topmiller, P.E. **Date**

1/17/97

JAMES R. TOPMILLER
NEW MEXICO
9354
REGISTERED PROFESSIONAL ENGINEER

E:\96316\A2421\DRAINAGE SIGNATURE.doc - 01/17/97

Legal Description:

Lot 3 of Block 4 of Sunport
Park Albu. N.M.

TABLE OF CONTENTS

SECTION		PAGE
I	LOCATION MAP	1
II	FLOODPLAIN MAP	2
III	SUPPLEMENTAL CALCULATIONS	3

APPENDIX

BASIN MAP AND DRAINAGE MANAGEMENT PLAN

GRADING AND DRAINAGE PLAN

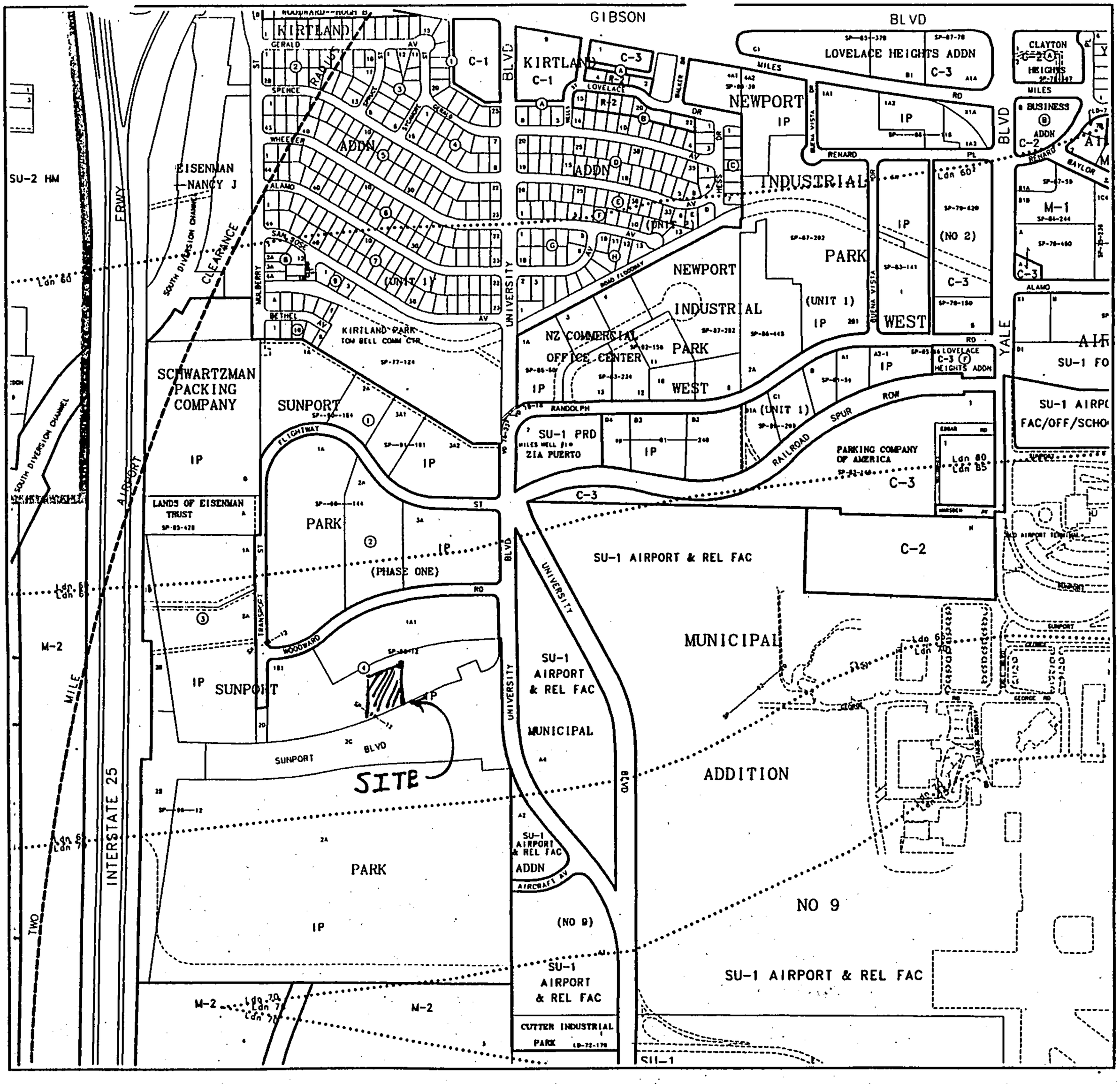

GRAPHIC SCALE IN FEET

250 0 500 1000

CITY OF Albuquerque

A Albuquerque G Geographic I Information S System

PLANNING DEPARTMENT

©Copyright 1996

Map Amended through April 19, 1996

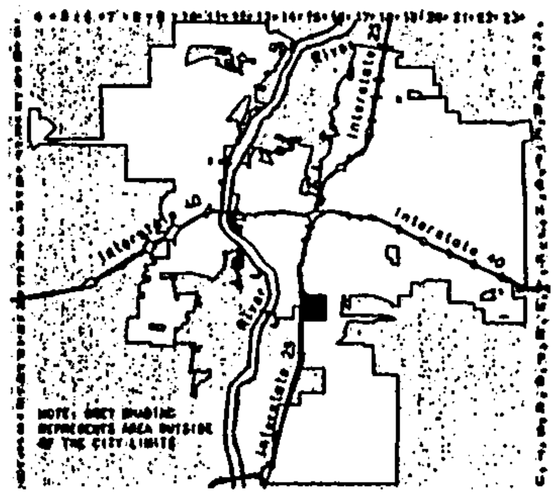

LEGAL DESCRIPTION

T10N

R3E

SEC 33

UNIFORM PROPERTY CODE

1-018-055

M-15-Z

FLOOD INSURANCE RATE MAP
COMMUNITY–PANEL NUMBER 350002–0035

HYDROLOGIC DATA-AMERISUITES SUNPORT PLACE 12/13/96

100-YR	PEAK DISCHARGE, CFS/ACRE			
TREATMENT	A	B	C	D
ZONE 2	1.56	2.28	3.14	4.7

PER C.O.A. DPM SECTION 22.2 - HYDROLOGY

FULLY DEVELOPED CONDITIONS

SUMMARY OF HYDROLOGIC DATA **RATIONAL METHOD (100YR)**

BASINS ID	AREA AC	AREA SQ.MI.	% LAND TREATMENT A	B	C	D	TIME TO PEAK	10-YR DISCHARGE CFS/AC	Q(10YR) CFS	COMPOSITE C	I (IN/HR)	Q(100YR) (CFS)
B1	1.679	0.0026	60.0	20.0	20.0	0.0	0.1333	0.00	0.0	0.40	5.05	3.39
B2	0.250	0.0004	0.0	0.0	50.0	50.0	0.1333	0.00	0.0	0.78	5.05	0.98
B3	0.019	0.0000	0.0	100.0	0.0	0.0	0.1333	0.00	0.0	0.45	5.05	0.04
B4	0.018	0.0000	0.0	40.0	40.0	20.0	0.1333	0.00	0.0	0.61	5.05	0.06
B5	1.259	0.0020	0.0	13.5	13.5	73.0	0.1333	0.00	0.0	0.82	5.05	5.23
B6	0.448	0.0007	0.0	13.5	13.5	73.0	0.1333	0.00	0.0	0.82	5.05	1.86
B7	0.042	0.0001	0.0	100.0	0.0	0.0	0.1333	0.00	0.0	0.45	5.05	0.10
B8	0.308	0.0005	0.0	0.0	0.0	100.0	0.1333	0.00	0.0	0.93	5.05	1.45
B9	0.061	0.0001	0.0	40.0	40.0	20.0	0.1333	0.00	0.0	0.61	5.05	0.19

?

HYDROLOGY CALCULATIONS FOR SUNPORT AMERISUITES.

ZONE 2

PROPOSED DEVELOPED CONDITIONS

NORTH TO SUNPORT PLACE RIGHT OF WAY.

BASINS B-4 & B-9

TOTAL AREA = 0.079 AC

TREATMENT A : 20%
TREATMENT B 40%
TREATMENT C 40%

$CI_{Avg.} = (1.70\ cfs/ac)(.2) + (3.14\ cfs/ac)(.4) + (2.28\ cfs/ac)(.4)$

$= 3.11\ cfs/ac$

$Q_{100} = (3.11\ cfs/ac)(0.079\ ac) = \underline{\underline{0.25\ cfs}}$

$Q_{100} \leq Q_{allow}$

$0.25 \leq 1.04\ cfs$ (Qallow per Master Sunport Park Drainage Plan)

SOUTH TO EXISTING LINED ARROYO:

TOTAL AREA = 2.311 ac

BASINS: B2, B5, B6, B7, B8

TREATMENT D = 73%
TREATMENT B = 13.5%
TREATMENT C = 13.5%

$CI_{avg} = (4.70\ cfs/ac)(.73) + (3.14\ cfs/ac)(.135) + (2.28\ cfs/ac)(.135) = 4.16\ cfs/ac$

$Q_{100} = (4.16\ cfs/ac)(2.31\ ac) = \underline{\underline{9.62\ cfs}}$

$Q_{100} \leq Q_{allow}$ (Qallow per Master Sunport Park Drainage Plan)

$9.62 < 9.66$

BOHANNAN-HUSTON INC.

PROJECT NAME Sunport Amerisuite SHEET ____ OF ____
PROJECT NO. 96316 A 2110 BY JCA DATE 12-12-96
SUBJECT ____ CH'D ____ DATE ____

(SUMP INLET #1)

$Q_{100} = 1.86$ cfs

$Q_{Design} = 2(1.86)$ cfs

$= 3.72$

SINGLE 'D' INLET

CAPICITY OF GRATE $= Q_o = .6\, A_n \sqrt{2gh}$

$Q_o = .6\left[(31 \times 18.5)/144\right]\sqrt{64.4(.5)} = 13.6$ cfs

$Q_o > Q_{Design}$ OK USE SINGLE 'D' @ inlet #1

(SUMP INLET #2)

$Q_{100} = 5.24$ cfs (Basin B-5)

$Q_{Design} = 2(5.24) = 10.48$ cfs

Same condition as above

$Q_o = 13.6$ cfs $>$ 10.48 cfs USE SINGLE 'D' inlet #2

BOHANNAN-HUSTON INC.

PROJECT NAME _____ SHEET _____ OF _____

PROJECT NO. _____ BY _____ DATE _____

SUBJECT _____ CH'D _____ DATE _____

SIZE STORM DRAIN LINES

SIZE PIPE TO RUN FULL WITH 100 yr EVENT FLOWS
(SEE BASIN MAP FOR LISTS OF SPECFIC FLOW RATES.)

INLET #1 : LOCATED N.E. CORNER OF SITE IN BASIN B-6.

$Q_{100} = 1.86 + 1.45 = 3.31$ cfs TRY 12" Dia RCP from inlet #1 to MH#1

$A = \frac{\pi 1^2}{4} = .785$ sf

$R = \frac{.785}{2\pi(.5)} = .25$

$n = 0.013$

$S = 1\%$

$Q_m = \frac{1.49}{.013}(.785)(.25)^{.67}(.01)^{.5} = 3.55$ cfs

$Q_{100} < Q_m$ USE 12" RCP

USE 12" RCP FROM INLET #1 TO INLET #2.

FROM INLET #2 to conc. spillway.
TRY 15" RCP

$A = 1.22$ sf

$R = .313$

$n = 0.013$

$S = .025$

$Q_{100} = 9.62$ cfs

$Q_m = \frac{1.49}{.013}(1.22)(.313)^{.67}(.025)^{.5} = 10.14$ cfs

$Q_{100} < Q_m$ vel = 8 fps OK BUT

TO REDUCE Vel. SELECT 18" RCP.
@ 0.84% slope
$Q_m = Q_{100}$ $Q_m = 9.62$ cfs
vel = 5.5 fps

BOHANNAN-HUSTON INC.

PROJECT NAME Americ Suites Sunport SHEET ____ OF ____
PROJECT NO. ____ BY SCA DATE 12-13-16
SUBJECT ____ CH'D ____ DATE ____

SIZING TEMP. SWALE FOR UNDEVELOPED FLOWS FROM ADJACENT PROPERTIES UPHILL.

OFFSITE BASIN B-1.

A = 1.679 AC

"A" 60%
"B" 30%
"C" 10%

$q = 1.56(.6) + 2.28(.2) + 3.14(.2) = 2.02 \text{ cfs/ac}$

$Q_{100} = 2.02 \text{ cfs/Ac} \; (1.679 \text{ AC}) = 3.39 \text{ cfs}$

SLOPE OF EARTHEN CHANNEL = 1%

TRAPEZOIDAL CHANNEL

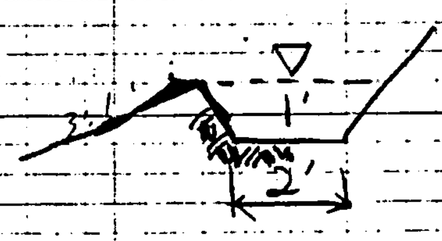

CAPACITY (SEE spread sheet) Q = 24.0 cfs

Vel = 2.9 fps
Q = 3.4 cfs
Depth = 0.4'

BOHANNAN-HUSTON INC.

PROJECT NAME Sunport Ameri Suites SHEET ____ OF ____
PROJECT NO. C96316A2421 BY JCA DATE 11-28-96
SUBJECT ____ CH'D ____ DATE ____

check for weir condition at entrance to 5' channel

WEIR COEFFICENT = 2.6800
CROSS SECTION DIVIDED INTO VERTICAL SLICES 1. FEET APART

POINT	DIST	ELEV	POINT	DIST	ELEV	POINT	DIST	ELEV
1	0.00	1.60	3	2.50	0.00	5	5.00	1.60
2	0.00	0.33	4	5.00	0.33			

WSEL (FT)	DEPTH INC (FT)	FLOW AREA (SQ FT)	FLOW RATE (CFS)	FLOW VEL (FPS)	TOP WID PLUS OBSTRUCTIONS
0.10	0.10	0.08	0.05	0.65	1.52
0.20	0.20	0.30	0.29	0.95	3.03
0.30	0.30	0.68	0.80	1.17	4.55
0.40	0.40	1.18	1.62	1.38	5.00
0.50	0.50	1.68	2.67	1.60	5.00
0.60	0.60	2.18	3.91	1.80	5.00
0.70	0.70 D_{100} = .7'	2.68	5.30 Q_{100}	1.98	5.00
0.80	0.80	3.18	6.84	2.15	5.00
0.90	0.90	3.68	8.49	2.31	5.00
1.00	1.00	4.18	10.27	2.46	5.00
1.10	1.10	4.68	12.16	2.60	5.00
1.20	1.20	5.18	14.15	2.73	5.00
1.30	1.30	5.68	16.24	2.86	5.00
1.40	1.40	6.18	18.43	2.98	5.00
1.50	1.50	6.68	20.71	3.10	5.00
1.60	1.60	7.18	23.07 Q_{cap}	3.22	5.00

→→→→→

$Q_{100} = 5.4$ cfs

$< Q_{cap}$.

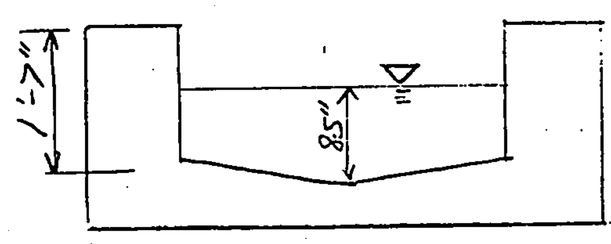

EARTHEN

UNDEVELOPED BASIN B-1 FLOW PROPOSED CHANNEL

MANNING'S N = .0220 SLOPE = .0050

POINT	DIST	ELEV	POINT	DIST	ELEV	POINT	DIST	ELEV
1	0.00	1.00	3	5.00	0.00			
2	3.00	0.00	4	8.00	1.00			

WSEL (FT)	DEPTH INC	FLOW AREA (SQ FT)	FLOW RATE (CFS)	WETTED PER (FT)	FLOW VEL (FPS)	TOP WID
0.10	0.10	0.2	0.2	2.6	0.9	2.60
0.20	0.20	0.5	0.7	3.3	1.4	3.20
0.30	0.30	0.9	1.5	3.9	1.8	3.80
0.40	0.40	1.3	2.6	4.5	2.1	4.40
0.50	0.50	1.8	4.1	5.2	2.3	5.00
0.60	0.60	2.3	5.8	5.8	2.6	5.60
0.70	0.70	2.9	8.0	6.4	2.8	6.20
0.80	0.80	3.5	10.6	7.1	3.0	6.80
0.90	0.90	4.2	13.6	7.7	3.2	7.40
1.00	1.00	5.0	17.0	8.3	3.4	8.00

D_{100} .45' Q_{100} 3.4 cfs V_{100} 2.2 fps

Q_{cap}

→→

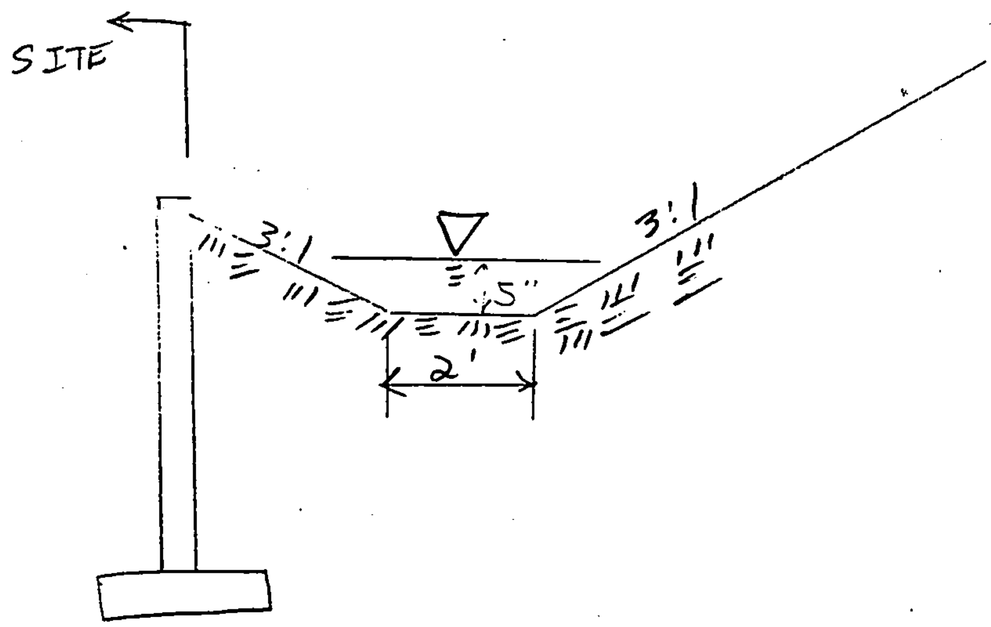

$Q_{100} = 3.4$ cfs

$Q_{cap} = 17.0$ cfs

$V_{100} = 2.2$ cfs

$Depth_{100} = .45'$

CDP5:[c96316A2412.HYD]OFFSITE.OUT

PROPOSED CONC. RECT. CHANNEL SOUTH OF SITE.

MANNING'S N = .0130 SLOPE = .0350

POINT	DIST	ELEV	POINT	DIST	ELEV	POINT	DIST	ELEV
1	0.00	~~2.00~~ 1.6	3	2.50	0.00	5	5.00	~~2.00~~ 1.6
2	0.00	0.33	4	5.00	0.33			

WSEL (FT)	DEPTH INC	FLOW AREA (SQ FT)	FLOW RATE (CFS)	WETTED PER (FT)	FLOW VEL (FPS)	TOP WID
0.10	0.10	0.1	0.2	1.5	2.9	1.52
0.20	0.20	0.3	1.4	3.1	4.6	3.03
0.30	0.30 D_{100} =	0.7	4.1 Q_{100} =	4.6	6.0 V_{100} =	4.55
0.40	0.40 .45'	1.2	9.3 5.4 cfs	5.2	8.0 7 fps	5.00
0.50	0.50	1.7	16.4	5.4	9.8	5.00
0.60	0.60	2.2	24.8	5.6	11.4	5.00
0.70	0.70	2.7	34.2	5.8	12.8	5.00
0.80	0.80	3.2	44.5	6.0	14.0	5.00
0.90	0.90	3.7	55.6	6.2	15.1	5.00
1.00	1.00	4.2	67.3	6.4	16.1	5.00
1.10	1.10	4.7	79.6	6.6	17.0	5.00
1.20	1.20	5.2	92.4	6.8	17.9	5.00
1.30	1.30	5.7	105.7	7.0	18.6	5.00
1.40	1.40	6.2	119.4	7.2	19.3	5.00
1.50	1.50	6.7	133.5	7.4	20.0	5.00
1.60	1.60	7.2	147.9 = Q_{cap}	7.6	20.6	5.00

→

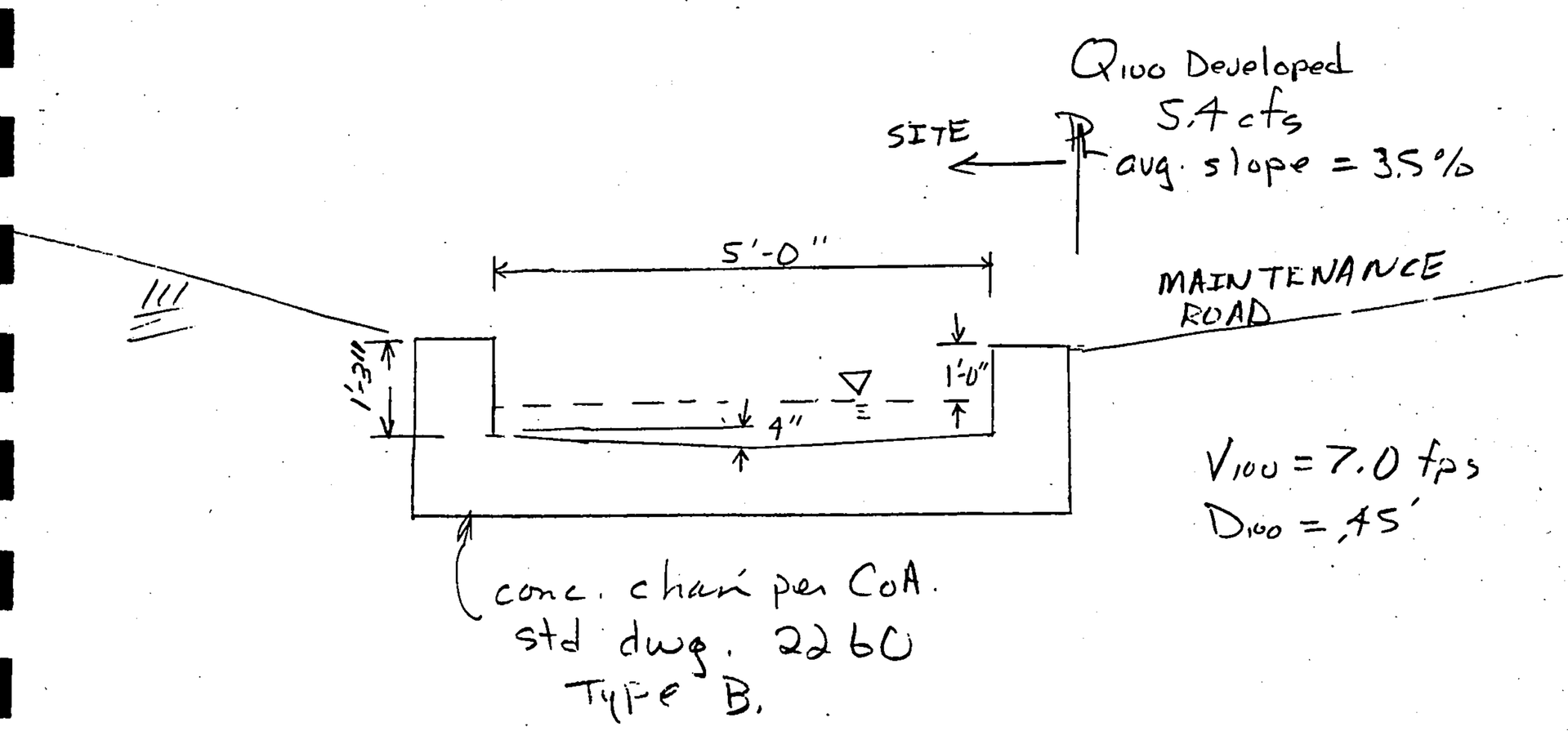

Detail 1

CDP5:[C96316A1413.HYD]CONCCHAN.OUT.

proposed conc. channel per detail 2.

MANNING'S N = .0130 SLOPE = .0679

POINT	DIST	ELEV	POINT	DIST	ELEV	POINT	DIST	ELEV
1	0.00	2.00	3	2.50	0.00	5	5.00	2.00
2	0.00	0.33	4	5.00	0.33			

WSEL (FT)	DEPTH INC	FLOW AREA (SQ FT)	FLOW RATE (CFS)	WETTED PER (FT)	FLOW VEL (FPS)	TOP WID
0.10	0.10	0.1	0.3	1.5	4.0	1.52
0.20	0.20	0.3	1.9	3.1	6.4	3.03
0.30	0.30	0.7	5.7	4.6	8.4	4.55
0.40	0.40	1.2	13.0	5.2	11.1	5.00
0.50	0.50	1.7	22.9	5.4	13.7	5.00
0.60	0.60	2.2	34.6	5.6	15.9	5.00
0.70	0.70	2.7	47.7	5.8	17.8	5.00
0.80	0.80	3.2	62.0	6.0	19.5	5.00
0.90	0.90	3.7	77.4	6.2	21.1	5.00
1.00	1.00	4.2	93.7	6.4	22.4	5.00
1.10	1.10	4.7	110.8	6.6	23.7	5.00
1.20	1.20	5.2	128.7	6.8	24.9	5.00
1.30	1.30	5.7	147.2	7.0	25.9	5.00
1.40	1.40	6.2	166.3	7.2	26.9	5.00
1.50	1.50	6.7	185.9	7.4	27.8	5.00
1.60	1.60	7.2	206.0	7.6	28.7	5.00
1.70	1.70	7.7	226.5	7.8	29.5	5.00
1.80	1.80	8.2	247.4	8.0	30.3	5.00
1.90	1.90	8.7	268.6	8.2	31.0	5.00
2.00	2.00	9.2	290.2	8.4	31.6	5.00

D_{100} .48' Q_{100} = 20.7 V_{100} = 13.1

→→

cdp5:[c96316a2412.hydro]conchan1.out

Q_{100} = 20.7 cfs
D_{100} = .48'
V_{100} = 13.1 fps

MAINTENANCE ROAD

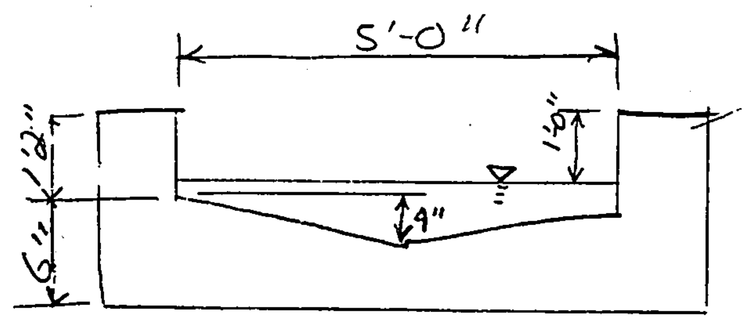

Detail 2

PROPOSED 24" CONC. RECT. CHANNEL/SPILLWAY.

MANNING'S N = .0130 SLOPE = .0090

POINT	DIST	ELEV	POINT	DIST	ELEV	POINT	DIST	ELEV
1	0.00	1.67	3	1.00	0.00	5	2.00	1.67
2	0.00	0.33	4	2.00	0.33			

WSEL (FT)	DEPTH INC	FLOW AREA (SQ FT)	FLOW RATE (CFS)	WETTED PER (FT)	FLOW VEL (FPS)	TOP WID
0.10	0.10	0.0	0.0	0.6	1.4	0.61
0.20	0.20	0.1	0.3	1.3	2.3	1.21
0.30	0.30	0.3	0.8	1.9	3.0	1.82
0.40	0.40	0.5	1.8	2.2	3.8	2.00
0.50	0.50	0.7	3.1	2.4	4.6	2.00
0.60	0.60	0.9	4.5	2.6	5.2	2.00
0.70	0.70	1.1	6.0	2.8	5.6	2.00
0.80	0.80	1.3	7.7	3.0	6.1	2.00
0.90	0.90	1.5	9.4	3.2	6.4	2.00
1.00	1.00	1.7	11.2	3.4	6.7	2.00
1.10	1.10	1.9	13.0	3.6	6.9	2.00
1.20	1.20	2.1	14.9	3.8	7.2	2.00
1.30	1.30	2.3	16.7	4.0	7.4	2.00
1.40	1.40	2.5	18.7	4.2	7.6	2.00
1.50	1.50	2.7	20.6	4.4	7.7	2.00
1.60	1.60	2.9	22.6	4.6	7.9	2.00
1.67	1.67	3.0	24.0	4.8	8.0	2.00
→→ 1.70			24.6		8.1	
1.80			26.6		8.2	
1.90			28.6		8.4	

D_{100} = .9'

Q_{100} = 9.62 cfs

V_{100} = 6.5 fps

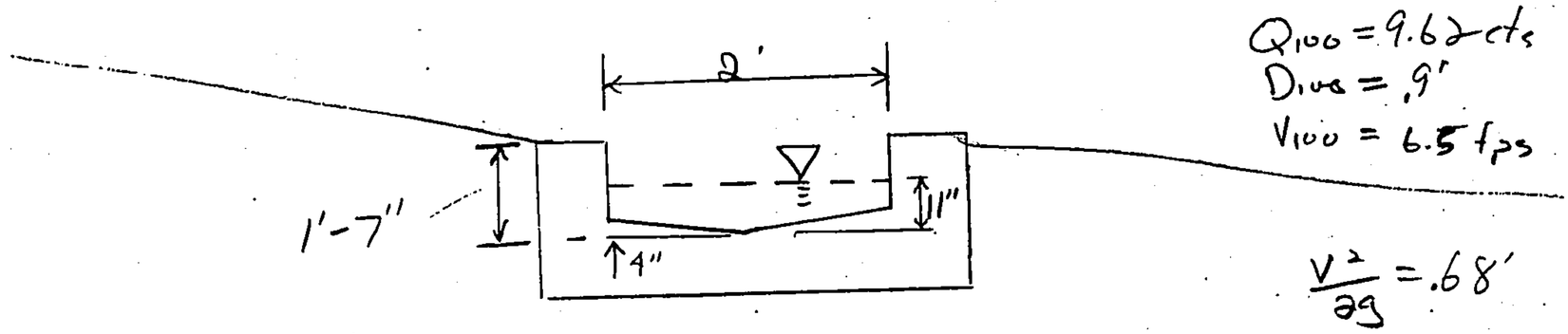

Q_{100} = 9.62 cfs
D_{100} = .9'
V_{100} = 6.5 fps

$\frac{V^2}{2g}$ = .68'

D_{100} + .68' = 1'-7

conc. channel w/ welded wire fabric.

CDP 5: [C96316A2412.HYD] SITE OUT.OUT

APPENDIX I

BASIN MAP AND DRAINAGE MANAGMENT PLAN

APPENDIX II

GRADING AND DRAINAGE PLAN