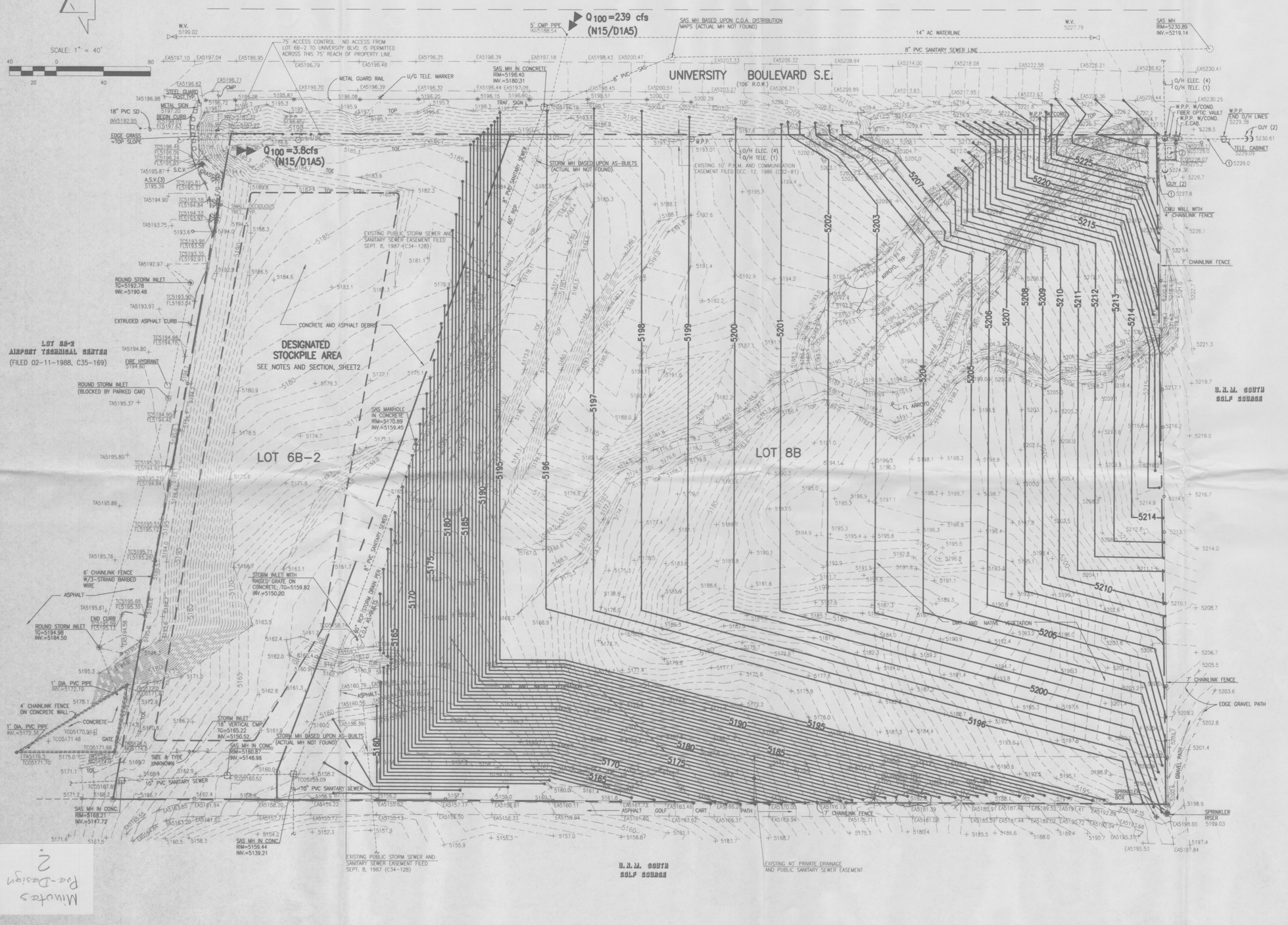

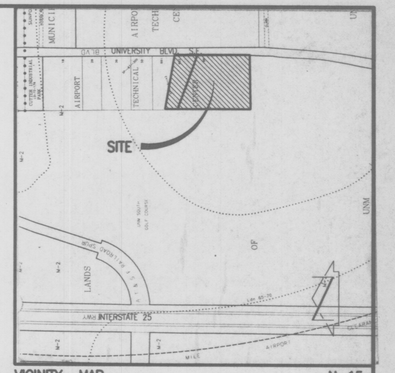

VICINITY MAP

N-15

SCALE: 1" = 750'

PROJECT BENCHMARK

CITY OF ALBUQUERQUE BENCHMARK 2-N16, A STANDARD C.O.A. BRASS CAP SET IN CONCRETE MONUMENT STAMPED "2-N16" AND PROJECTING 0.1 FT. ABOVE THE GROUND NEAR THE SOUTHWEST CORNER OF ALBUQUERQUE INTERNATIONAL AIRPORT IN AN OPEN PRAIRIE.
ELEVATION = 5304.88 FEET (M.S.L.D., DESTROYED, REFERENCED BY PREVIOUS SURVEY)

T.B.M.

A RAILROAD SPIKE IN A POWER POLE AT THE NE CORNER OF LOT 6B-1
ELEVATION = 5200.94 (M.S.L.D.)

LEGAL DESCRIPTION

LOTS 6B-2 AND 8B, AIRPORT TECHNICAL CENTER

LEGEND AND KEYED NOTES

TC	TOP OF CURB
TA	TOP OF ASPHALT
FL	FLOWLINE
TW	TOP OF WALL
TG	TOP OF GRATE
INV.	INVERT
E/G	EDGE OF GRASS
W.P.P.	WOOD POWER POLE
SAS	SANITARY SEWER
W.V.	WATER VALVE
O/H TELE. (1)	OVERHEAD TELEPHONE LINE (NO. OF LINES)
O/H ELEC. (3)	OVERHEAD ELECTRIC LINE (NO. OF LINES)
EA	EDGE OF ASPHALT
MH	MANHOLE
E.M.	ELECTRIC METER
E.CAB.	ELECTRIC CABINET
TRAF.	TRAFFIC
NG	NATURAL GRADE
A.S.V.	ANTI-SIPHON VALVE
S.C.V.	SPRINKLER CONTROL VALVE
W/COND.	WITH CONDUIT
①	PVC PIPE (VERTICAL) WITH CABLE
②	TELEPHONE BOX ON CONCRETE
+ 5196.3	EXISTING SPOT ELEVATION
	EXISTING CONTOUR
	EXISTING DECIDUOUS TREE
	EXISTING SMALL DECIDUOUS TREE
	EXISTING TREE LINE
— 5200 —	PROPOSED CONTOUR

NOTES:

1. A TOPOGRAPHIC SURVEY WAS PERFORMED BY JEFF MORTENSEN AND ASSOCIATES FROM SEPT. 9 TO SEPT. 11, 1998.
2. THIS IS NOT A BOUNDARY SURVEY. APPARENT PROPERTY CORNERS ARE SHOWN FOR ORIENTATION ONLY. BOUNDARY DATA SHOWN IS BASED UPON THE PLAT FILED 9-8-87, BK. C34, PAGE 128 AND THE PLAT FILED 2-11-88, BK. C35, PAGE 169.

RECEIVED
JAN 13 1999
HYDROLOGY SECTION

JEFFREY G. MORTENSEN
NEW MEXICO
8547
REGISTERED PROFESSIONAL ENGINEER
11-24-98

Minutes Pre-Design 2

File Path: E:\WAV\WORK\920787\
File Name: 920787G.DWG
Plot Date: 11-24-1998
Plot Time: 08:50 am

JMA
JEFF MORTENSEN & ASSOCIATES, INC.
6010-B MIDWAY PARK BLVD. N.E.
ALBUQUERQUE NEW MEXICO 87109
ENGINEERS SURVEYORS (505) 345-4250

GRADING PLAN
AIRPORT TECHNICAL CENTER LOTS 6B-2 AND 8B

APPROVED FOR ROUGH GRADING

CITY HYDROLOGY — DATE 11-25-98
Engineer's certification upon completion of grading.

DESIGNED BY G.M.
DRAWN BY D.L.M.
APPROVED BY J.G.M.

NO.	DATE	BY	REVISIONS

JOB NO. 920787
DATE 11-1998
SHEET 1 OF 3

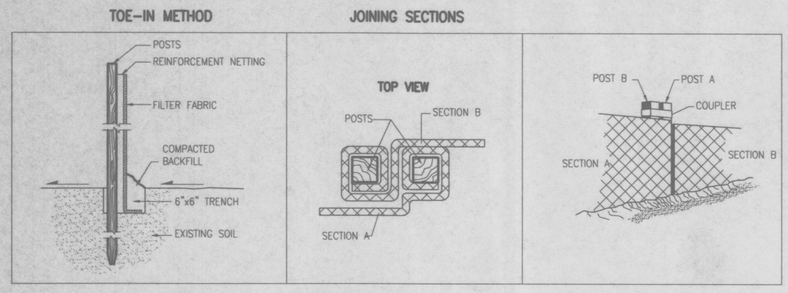

PREFABRICATED SILT FENCE DETAIL

NOT TO SCALE

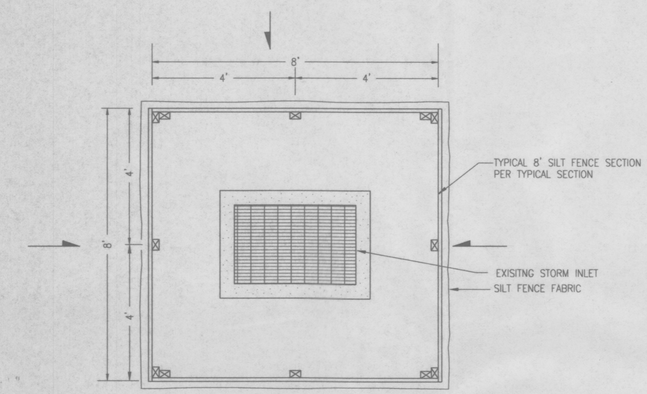

SILT FENCE ENCLOSURE FOR EXISTING INLET

SCALE: 1" = 2'

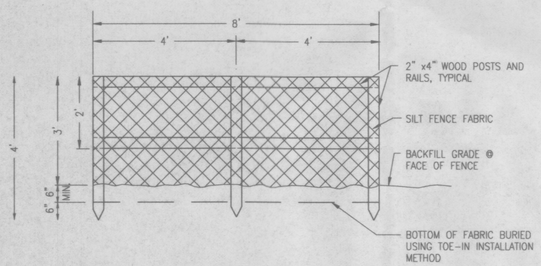

TYPICAL 8' SILT FENCE SECTION

SCALE: 1" = 2'

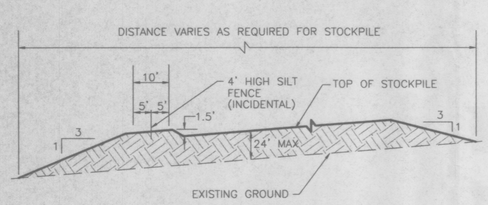

TYPICAL STOCKPILE SECTION

SCALE: 1"=20'

GENERAL NOTES:

1. ALL WORK DETAILED ON THESE PLANS TO BE PERFORMED UNDER CONTRACT SHALL, EXCEPT AS OTHERWISE STATED OR PROVIDED FOR HEREON, BE CONSTRUCTED IN ACCORDANCE WITH THE CITY OF ALBUQUERQUE STANDARD SPECIFICATIONS FOR PUBLIC WORKS CONSTRUCTION – 1986, UPDATE 6.
2. TWO (2) WORKING DAYS PRIOR TO ANY EXCAVATION, CONTRACTOR MUST CONTACT NEW MEXICO ONE CALL SYSTEM, 260–1990 FOR LOCATION OF EXISTING UTILITIES.
3. IF ANY UTILITY LINES, PIPELINES, OR UNDERGROUND UTILITY LINES ARE SHOWN ON THESE DRAWINGS, THEY ARE SHOWN IN AN APPROXIMATE MANNER ONLY, AND SUCH LINES MAY EXIST WHERE NONE ARE SHOWN. IF ANY SUCH EXISTING LINES ARE SHOWN, THE LOCATION IS BASED UPON INFORMATION PROVIDED BY THE OWNER OF SAID UTILITY, AND THE INFORMATION MAY BE INCOMPLETE, OR MAY BE OBSOLETE BY THE TIME CONSTRUCTION COMMENCES. THE ENGINEER HAS CONDUCTED ONLY PRELIMINARY INVESTIGATION OF THE LOCATION, DEPTH, SIZE, OR TYPE OF EXISTING UTILITY LINES, PIPELINES, OR UNDERGROUND UTILITY LINES. THIS INVESTIGATION IS NOT CONCLUSIVE, AND MAY NOT BE COMPLETE, THEREFORE, MAKES NO REPRESENTATION PERTAINING THERETO, AND ASSUMES NO RESPONSIBILITY OR LIABILITY THEREFORE. THE CONTRACTOR SHALL INFORM ITSELF OF THE LOCATION OF ANY UTILITY LINE, PIPELINE, OR UNDERGROUND UTILITY LINE IN OR NEAR THE AREA OF THE WORK IN ADVANCE OF AND DURING EXCAVATION WORK. THE CONTRACTOR IS FULLY RESPONSIBLE FOR ANY AND ALL DAMAGE CAUSED BY ITS FAILURE TO LOCATE, IDENTIFY AND PRESERVE ANY AND ALL EXISTING UTILITIES, PIPELINES, AND UNDERGROUND UTILITY LINES. IN PLANNING AND CONDUCTING EXCAVATION, THE CONTRACTOR SHALL COMPLY WITH STATE STATUTES, MUNICIPAL AND LOCAL ORDINANCES, RULES AND REGULATIONS, IF ANY, PERTAINING TO THE LOCATION OF THESE LINES AND FACILITIES.
4. SHOULD A CONFLICT EXIST BETWEEN THESE PLANS AND ACTUAL FIELD CONDITIONS, THE CONTRACTOR SHALL PROMPTLY NOTIFY THE ENGINEER IN WRITING SO THAT THE CONFLICT CAN BE RESOLVED WITH A MINIMUM AMOUNT OF DELAY FOR ALL PARTIES. THE CONTRACTOR SHALL BE RESPONSIBLE FOR ALL INTERPRETATIONS IT MAKES WITHOUT FIRST CONTACTING THE ENGINEER AS REQUIRED ABOVE.
5. THE CONTRACTOR SHALL MAINTAIN ACCESS TO ADJACENT PROPERTIES DURING CONSTRUCTION.
6. ALL WORK ON THIS PROJECT SHALL BE PERFORMED IN ACCORDANCE WITH APPLICABLE FEDERAL, STATE AND LOCAL LAWS, RULES AND REGULATIONS CONCERNING SAFETY AND HEALTH.
7. THE CONTRACTOR SHALL ENSURE THAT NO SOIL ERODES FROM THE SITE INTO PUBLIC RIGHT–OF–WAY OR ONTO PRIVATE PROPERTY.
8. THE CONTRACTOR SHALL PROMPTLY CLEAN UP ANY MATERIAL EXCAVATED WITHIN THE PUBLIC RIGHT–OF–WAY SO THAT THE EXCAVATED MATERIAL IS NOT SUSCEPTIBLE TO BEING WASHED DOWN THE STREET.
9. CONTRACTOR SHALL NOTIFY THE SURVEYOR NOT LESS THAN SEVEN (7) DAYS PRIOR TO STARTING WORK IN ORDER THAT THE SURVEYOR MAY TAKE NECESSARY MEASURES TO ENSURE THE PRESERVATION OF SURVEY MONUMENTS. CONTRACTOR SHALL NOT DISTURB PERMANENT SURVEY MONUMENTS WITHOUT THE CONSENT OF THE ENGINEER AND SHALL NOTIFY THE SURVEYOR AND BEAR THE EXPENSE OF REPLACING ANY THAT MAY BE DISTURBED WITHOUT PERMISSION. REPLACEMENT SHALL BE DONE ONLY BY THE SURVEYOR. WHEN A CHANGE IS MADE IN THE FINISHED ELEVATION OF THE PAVEMENT OF ANY ROADWAY IN WHICH A PERMANENT SURVEY MONUMENT IS LOCATED, CONTRACTOR SHALL, AT HIS OWN EXPENSE, ADJUST THE MONUMENT COVER TO THE NEW GRADE UNLESS OTHERWISE SPECIFIED.
10. A DISPOSAL SITE FOR ALL EXCESS EXCAVATION MATERIAL (CONTAMINATED OR OTHERWISE), ASPHALTIC PAVING, CONCRETE PAVING, ETC. SHALL BE OBTAINED BY THE CONTRACTOR IN COMPLIANCE WITH APPLICABLE REGULATIONS. ALL COSTS INCURRED IN OBTAINING A DISPOSAL SITE AND IN HAUL THERETO SHALL BE CONSIDERED INCIDENTAL TO CONSTRUCTION, THEREFORE, NO SEPARATE PAYMENT SHALL BE MADE.
11. A BORROW SITE FOR IMPORT MATERIAL SHALL BE OBTAINED BY THE CONTRACTOR IN COMPLIANCE WITH APPLICABLE REGULATIONS. ALL COSTS INCURRED IN OBTAINING A BORROW SITE AND IN HAUL THERETO SHALL BE CONSIDERED INCIDENTAL TO CONSTRUCTION, THEREFORE, NO SEPARATE PAYMENT SHALL BE MADE.
12. THE CONTRACTOR SHALL BE RESPONSIBLE FOR SAFELY OBTAINING THE REQUIRED COMPACTION. THE CONTRACTOR SHALL SELECT AND USE METHODS WHICH SHALL NOT BE INJURIOUS OR DAMAGING TO THE EXISTING FACILITIES AND STRUCTURES WHICH SURROUND THE WORK AREAS.
13. THE CONTRACTOR SHALL CONFINE HIS WORK WITHIN THE CONSTRUCTION LIMITS IN ORDER TO PRESERVE THE EXISTING IMPROVEMENTS AND SO AS NOT TO INTERFERE WITH THE OPERATIONS OF THE EXISTING FACILITIES.
14. PRIOR TO CONSTRUCTION, THE CONTRACTOR SHALL EXCAVATE AND VERIFY THE HORIZONTAL AND VERTICAL LOCATION OF ALL POTENTIAL OBSTRUCTIONS. SHOULD A CONFLICT EXIST, THE CONTRACTOR SHALL NOTIFY THE ENGINEER IN WRITING SO THAT THE CONFLICT CAN BE RESOLVED WITH A MINIMUM AMOUNT OF DELAY.
15. ALL FILL SHALL BE FREE FROM VEGETATION, DEBRIS, AND OTHER DELETERIOUS MATERIALS.
16. ALL EXISTING UTILITIES ENCOUNTERED WITHIN THE WORK LIMITS SHALL BE ADJUSTED TO GRADE AND SHALL BE CONSIDERED INCIDENTAL TO CONSTRUCTION.
17. THE CONTRACTOR SHALL SECURE "TOPSOIL DISTURBANCE PERMIT" PRIOR TO BEGINNING CONSTRUCTION.
18. ANY AREAS OF EXCESS DISTURBANCE (TRAFFIC ACCESS, STORAGE YARD, STOCKPILE, EXCAVATED MATERIAL, ETC.) SHALL BE RESEEDED ACCORDING TO C.O.A. SPECIFICATION 1012 'NATIVE GRASS SEEDING.' THIS WILL BE CONSIDERED INCIDENTAL TO CONSTRUCTION, THEREFORE, NO SEPARATE PAYMENT WILL BE MADE.
19. CAUTION: THESE DRAWINGS DO NOT INCLUDE NECESSARY COMPONENTS FOR CONSTRUCTION SAFETY WHICH SHALL REMAIN THE RESPONSIBILITY OF THE CONTRACTOR.

SOIL STOCKPILE NOTES

1. AFTER ALL MATERIAL HAS BEEN PLACED, THE SURFACE OF THE STOCKPILE SHOULD BE BLADED SMOOTH THEN WATERED THOROUGHLY TO PROMOTE CRUSTING.
2. STOCKPILE SIDE SLOPES SHALL BE 3:1.
3. DURING CONSTRUCTION AND UPON COMPLETION, AT LEAST ONE 12' WIDE RAMP SLOPED AT LESS THAN 7–1/2% SHALL BE PROVIDED TO ALLOW WATER TRUCK ACCESS TO THE TOP OF THE STOCKPILE.
4. THE TOP SURFACE OF THE FINISHED STOCKPILE SHOULD BE FIRM ENOUGH TO ALLOW WATER TRUCK ACCESS.
5. 4' HIGH SILT FENCE SHALL BE CONSTRUCTED AROUND THE PERIMETER OF THE TOP OF THE FINISHED STOCKPILE. A BREAK IN THE FENCE SHALL BE PROVIDED TO ALLOW WATER TRUCK ACCESS AT THE ACCESS RAMP. SILT FENCE SHALL BE CONSIDERED INCIDENTAL TO EARTHWORK ITEMS.

EARTHWORK SUMMARY 11–11–98

	CUT	FILL	NET
BANK VOLUMES	1,330 CY	127,670 CY	–126,1330 CY
LOOSE VOLUMES (25% SHRINK)	1,330 CY	159,580 CY	–158,250 CY
LOOSE VOLUMES (30% SHRINK)	1,330 CY	165,970 CY	–164,630 CY

DRAINAGE PLAN

EXECUTIVE SUMMARY:

THE PURPOSE OF THIS PLAN IS TO OBTAIN ROUGH GRADING APPROVAL. THE PROJECT CONSISTS OF ROUGH GRADING FOR AIRPORT TECHNICAL CENTER LOTS 6B–2 AND 8B. THIS SUBMITTAL IS FOR ROUGH GRADING APPROVAL ONLY. THERE IS NO BUILDING CONSTRUCTION PROPOSED AT THIS TIME. SITE SPECIFIC GRADING AND DRAINAGE PLANS WILL BE REQUIRED FOR BUILDING PERMIT APPROVALS.
THE SITE IS CURRENTLY UNDEVELOPED. THE MAJORITY OF THE EXISTING SITE DRAINAGE CONCENTRATES AT AN EXISTING STORM INLET LOCATED NEAR THE NORTHWEST END OF LOT 8B. THE WESTERLY THIRD OF THE SITE SHEET DRAINS TO THE UNM SOUTH GOLF COURSE. THE PROPOSED DRAINAGE CONDITIONS WILL BE THE SAME AS THE EXISTING CONDITIONS.
OFFSITE FLOWS ENTER THE SITE FROM THE DEVELOPED LOT TO THE NORTH, AND FROM THE EAST WITHIN A STORM DRAIN WHICH PASSES THROUGH THE SITE AND EXITS TO THE WEST. THESE OFFSITE FLOWS WILL BE ACCEPTED BY THIS SITE IN THE PROPOSED CONDITION.

INTRODUCTION:

A DRAINAGE INFORMATION SHEET IS INCLUDED WITH THIS SUBMITTAL. SEPARATE SUBMITTALS WILL BE REQUIRED FOR BUILDING PERMIT APPROVAL. THERE ARE NO INFRASTRUCTURE IMPROVEMENTS REQUIRED FOR THIS PROJECT.

PROJECT DESCRIPTION:

AS SHOWN BY VICINITY MAP N–15, LOCATED ON SHEET 1, THE SITE IS LOCATED WEST OF UNIVERSITY BOULEVARD SE AND EAST OF THE UNM SOUTH GOLF COURSE. THE NEAREST CROSS STREET ON UNIVERSITY BOULEVARD IS CLARK CARR ROAD. UNIVERSITY BOULEVARD IS A PAVED STREET. THE EXISTING SITE IS ROUGH AND UNIMPROVED EXCEPT FOR EXISTING SANITARY SEWER AND STORM DRAIN LINES WHICH LIE WITHIN AN EXISTING PUBLIC STORM SEWER AND SANITARY SEWER EASEMENT LOCATED ALONG THE NORTH BOUNDARY OF LOT 8B.
AS SHOWN BY PANEL 41 OF THE SOIL SURVEY OF BERNALILLO COUNTY AND PARTS OF SANDOVAL AND VALENCIA COUNTIES, NEW MEXICO, PUBLISHED BY THE USDA SOIL CONSERVATION SERVICE, THE PREDOMINANT SOIL TYPE FOUND ON SITE IS THE BLUEPOINT–KOKAN ASSOCIATION. THIS SOIL CONTAINS APPROXIMATELY 50% OF A BLUEPOINT LOAMY FINE SAND WITH 5 TO 15 PERCENT SLOPES, AND 40% OF A KOKAN GRAVELLY SAND THAT HAS 15 TO 40% SLOPES. THE BLUEPOINT SOIL IS LOCATED ON FANS BETWEEN THE GRAVELLY RIDGES OF THE HILLY TO STEEP KOKAN SOIL. APPROXIMATELY 10% OF THE SOIL GROUP IS REPRESENTATIVE OF THE KOKAN SERIES, HOWEVER, IT HAS A HIGH LIME LAYER IN THE SUBSTRATA. THIS BLUEPOINT KOKAN ASSOCIATION EXHIBITS SLOW RUNOFF, WITH A MODERATE TO SEVERE HAZARD OF WATER EROSION.
AS SHOWN BY PANEL 342 OF 825 OF THE NATIONAL FLOOD INSURANCE PROGRAM FLOOD INSURANCE RATE MAPS PUBLISHED BY FEMA FOR BERNALILLO COUNTY, NEW MEXICO AND INCORPORATED AREAS DATED SEPTEMBER 20, 1996, THIS SITE DOES NOT LIE WITHIN A DESIGNATED FLOOD HAZARD AREA.

EXISTING CONDITIONS:

THE SITE IS CURRENTLY UNDEVELOPED. OFFSITE FLOWS ENTER THE SITE FROM THE NORTH FROM THE AIRBORNE SITE (HYDROLOGY FILE NO. N15/D1A5, C.L. WEISS ENGINEERING). THIS SITE DISCHARGES TO THE NORTHEAST CORNER OF LOT 6B–2 THROUGH A CULVERT. ACCORDING TO THAT DRAINAGE PLAN, THIS DISCHARGE IS LIMITED TO THE PRE–DEVELOPED RELEASE RATE OF 3.8 CFS THROUGH DETENTION PONDING. THIS OFFSITE FLOW WILL CONTINUE TO BE ACCEPTED BY LOT 6–B2 AND WILL NOT BE BLOCKED. AS PREVIOUSLY MENTIONED, A 60" STORM DRAIN PASSES THROUGH THE SITE ALONG THE NORTH BOUNDARY OF LOT 8B. ACCORDING TO THE DRAINAGE REPORT PREPARED BY BOHANNAN–HUSTON (HYDROLOGY FILE NO. N15/D1A3) THIS STORM DRAIN IS DESIGNED FOR A BULKED FLOW RATE OF 263 CFS. THE MAJORITY OF LOTS 6B–2 AND LOT 8B DRAIN TO AN EXISTING STORM INLET LOCATED AT A LOW POINT OF CONCENTRATION NEAR THE NORTHWEST CORNER OF LOT 8B. IT IS AT THIS POINT THAT EXISTING SITE DRAINAGE ENTERS THE STORM DRAIN SYSTEM. THIS STORM DRAIN OUTFALLS TO AN ARROYO LOCATED BETWEEN THE UNM SOUTH GOLF COURSE AND I–25, AND ULTIMATELY TO THE TIJERAS ARROYO. THIS STORM DRAIN SYSTEM WILL NOT BE MODIFIED BY THIS PROJECT, NOR WILL THE OFFSITE FLOWS BE ALTERED IN ANY WAY.

DEVELOPED CONDITIONS:

THE PROPOSED GRADING REQUIRES IMPORTED FILL TO CONSTRUCT A ROUGH GRADING BUILDING PAD ON LOT 8B. EARTHWORK CALCULATIONS ARE SHOWN ON SHEET 2. AS SHOWN BY THESE CALCULATIONS, THERE WILL BE APPROXIMATELY 160,000 CUBIC YARDS OF FILL REQUIRED TO ACCOMPLISH THE PROPOSED GRADING. THIS VOLUME IS BASED UPON A 25 TO 30% SHRINK FACTOR. THE PROPOSED GRADING WILL NOT CHANGE THE EXISTING DRAINAGE PATTERNS ON THE SITE WHEREBY THE MAJORITY OF THE SITE DRAINAGE CONCENTRATES AT AN EXISTING STORM INLET AND ENTERS AN EXISTING STORM DRAIN. THE REMAINING PORTION OF DRAINAGE ON THE SITE SHEET DRAINS TO THE WEST TO THE UNM SOUTH GOLF COURSE. IN CONJUNCTION WITH THIS NEW GRADING, EROSION CONTROL MEASURES WILL BE INSTALLED TO PREVENT SOIL EROSION, AND/OR SOIL DEPOSITION ON THE UNM SOUTH GOLF COURSE. SHEET 3 OF THIS SUBMITTAL SHOWS THE PROPOSED LOCATIONS FOR SILT FENCES TYPICALLY PLACED AT THE TOP AND TOE OF SLOPES. A SILT FENCE WILL ALSO BE CONSTRUCTED AROUND THE EXISTING STORM INLET TO REDUCE THE AMOUNT OF SEDIMENT, WHICH CAN ENTER THE EXISTING STORM DRAIN SYSTEM.
IN ADDITION TO THE PROPOSED GRADING MOSTLY CONTAINED ON LOT 8B, A TEMPORARY SOIL STOCKPILE WILL BE CONSTRUCTED ON LOT 6B–2. THE APPROXIMATE LOCATION OF THIS STOCKPILE IS SHOWN ON THE GRADING PLAN ON SHEET 1. NOTES SPECIFIC TO THIS STOCKPILE, AND A TYPICAL SECTION OF THE STOCKPILE ARE SHOWN ON SHEET 2. THERE WILL BE EROSION CONTROL MEASURES SUCH AS SILT FENCES AND THE USE OF WATER FOR DUST CONTROL. THIS STOCKPILE WILL NOT BE A PERMANENT GRADING FEATURE OF THE SITE, BUT RATHER A TEMPORARY LOCATION FOR STORING EXCESS SOIL. THIS STOCKPILE SHALL BE PLACED AT LEAST TEN FEET NORTH OF THE LOT LINE BETWEEN LOT 6B–2 AND 8B, SUCH THAT THE EXISTING OFFSITE FLOW FROM THE LOT TO THE NORTH WILL NOT BE BLOCKED AND WILL CONTINUE TO DRAIN TO THE EXISTING STORM INLET.

GRADING PLAN:

THE GRADING PLAN ON SHEET 1 SHOWS: 1) EXISTING SPOT ELEVATIONS AND CONTOURS AT 1'0" INTERVALS AS DETERMINED FROM A TOPOGRAPHIC SURVEY PREPARED BY JEFF MORTENSEN & ASSOCIATES DATED SEPTEMBER 9–11, 1998, 2) THE LIMIT AND CHARACTER OF EXISTING IMPROVEMENTS, 3) THE LIMIT AND CHARACTER OF THE PROPOSED IMPROVEMENTS, 4)PROPOSED GRADES INDICATED BY SPOT ELEVATIONS AND CONTOURS AT 1'0" INTERVALS, AND 5) CONTINUITY BETWEEN EXISTING AND PROPOSED GRADES.

EROSION CONTROL PLAN:

THE EROSION CONTROL PLAN ON SHEET 3 SHOWS: 1) THE AFOREMENTIONED GRADING PLAN, 2) LOCATIONS OF PROPOSED SILT FENCES. THIS EROSION CONTROL PLAN IS INTENDED TO MITIGATE DAMAGE DUE TO SOIL EROSION AND DEPOSITION IN ACCORDANCE WITH SECTION 22.7 OF THE CITY OF ALBUQUERQUE DPM AND SECTION 14–5–2–3(D) OF THE CITY SUBDIVISION ORDINANCE. THIS SITE IS NOT ADJACENT TO A WATERCOURSE DEFINED AS A MAJOR FACILITY; HENCE NO HYDRAULIC CALCULATIONS ARE REQUIRED OR PROVIDED. ALL DISTURBED AREAS SHALL BE RESEEDED IN ACCORDANCE WITH CITY OF ALBUQUERQUE SPECIFICATION 1012 "NATIVE GRASS SEEDING".

CALCULATIONS:

THE EXISTING SITE CONSISTS OF 100% LAND TREATMENT C. THE PROPOSED CONDITIONS WILL RESULT IN THE SAME LAND TREATMENT, HENCE NO CHANGE IN THE VOLUME OR PEAK RATE OF RUNOFF WILL BE REALIZED DUE TO THE PROPOSED GRADING. BECAUSE THERE IS NO CHANGE IN RUNOFF, DRAINAGE CALCULATIONS WERE NOT PERFORMED FOR THIS PLAN.

CONCLUSION:

THERE ARE NO VARIANCES REQUESTED BY THIS SUBMITTAL. THE PROPOSED GRADING AND DRAINAGE PLAN AND EROSION CONTROL PLANS WILL NOT CHANGE THE EXISTING DRAINAGE PATTERNS FOR THE SITE. A SITE–SPECIFIC GRADING AND DRAINAGE PLAN WILL BE REQUIRED FOR ANY PAVING OR BUILDING CONSTRUCTION ON THIS SITE. THIS SUBMITTAL IS FOR ROUGH GRADING ONLY. ALL OFFSITE FLOWS CONTRIBUTING TO THIS SITE WILL BE ACCEPTED AND PASSED TO THEIR EXISTING OUTFALL.

JEFF G. MORTENSEN NEW MEXICO 8547 PROFESSIONAL ENGINEER

11-24-98

File Path: E:\MWA\2014\920787\ | Plot Date: 11–23–1998
File Name: 920787DS.DWG | Plot Time: 2:28 pm

JEFF MORTENSEN & ASSOCIATES, INC.
8010–B MIDWAY PARK BLVD. N.E.
ALBUQUERQUE NEW MEXICO 87109
ENGINEERS SURVEYORS (505) 345–4250

DRAINAGE PLAN, GENERAL NOTES, SECTIONS AND DETAILS
AIRPORT TECHNICAL CENTER LOTS 6B-2 AND 8B

DESIGNED BY G.M.
DRAWN BY D.L.M.
APPROVED BY J.G.M.

NO.	DATE	BY	REVISIONS

JOB NO. 920787
DATE 11–1998
SHEET 2 OF 3

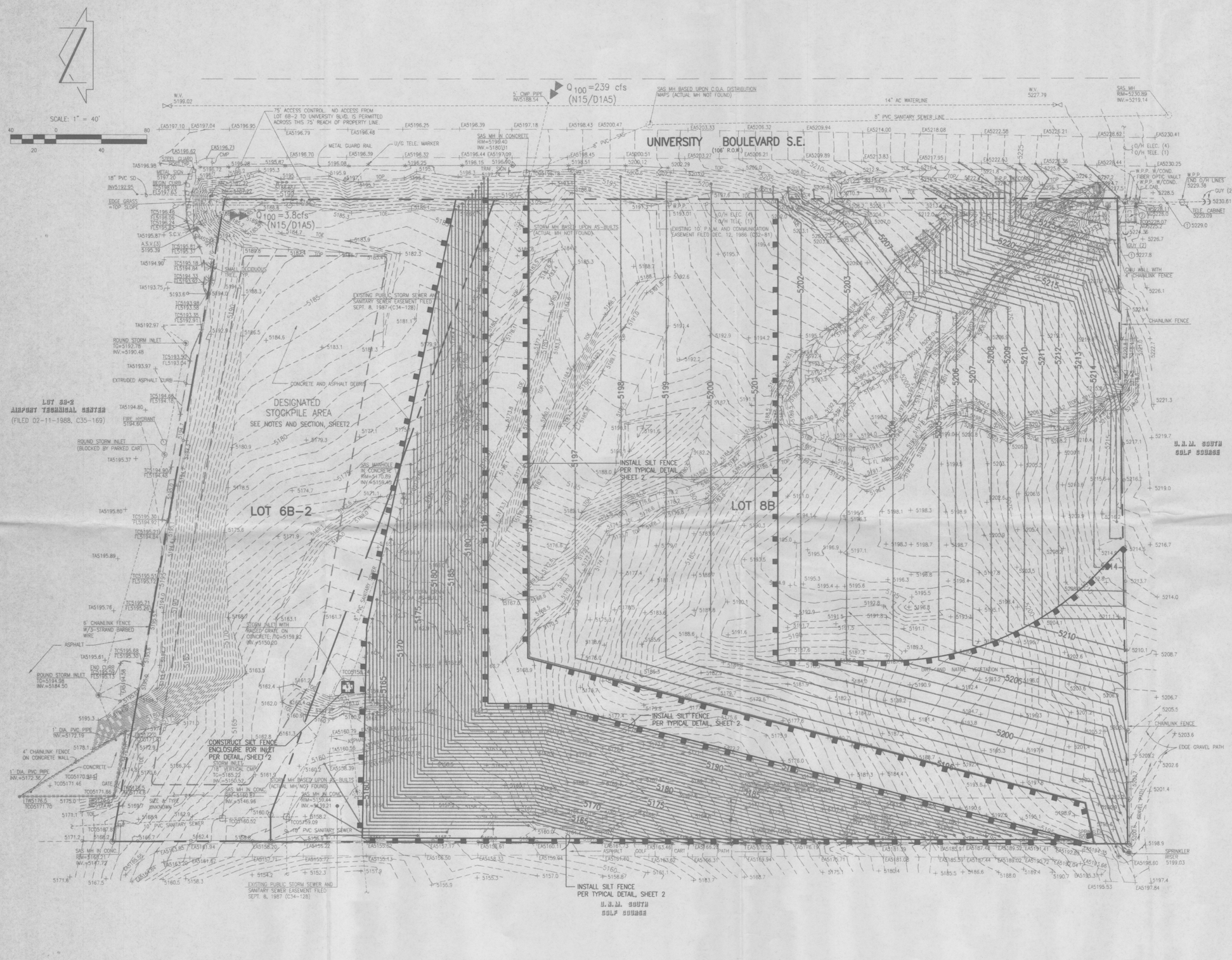

S.C.S. SOIL MAP

PLATE 41

SCALE: 1" = 2000'

PROJECT BENCHMARK

CITY OF ALBUQUERQUE BENCHMARK 2-N16, A STANDARD C.O.A. BRASS CAP SET IN CONCRETE MONUMENT STAMPED "2-N16" AND PROJECTING 0.1 FT. ABOVE THE GROUND NEAR THE SOUTHWEST CORNER OF ALBUQUERQUE INTERNATIONAL AIRPORT IN AN OPEN PRAIRIE.
ELEVATION = 5304.88 FEET (M.S.L.D., DESTROYED, REFERENCED BY PREVIOUS SURVEY)

T.B.M.

A RAILROAD SPIKE IN A POWER POLE AT THE NE CORNER OF LOT 6B-1
ELEVATION = 5200.94 (M.S.L.D.)

LEGAL DESCRIPTION

LOTS 6B-2 AND 8B, AIRPORT TECHNICAL CENTER

LEGEND AND KEYED NOTES

TC	TOP OF CURB
TA	TOP OF ASPHALT
FL	FLOWLINE
TW	TOP OF WALL
TG	TOP OF GRATE
INV.	INVERT
E/G	EDGE OF GRASS
W.P.P.	WOOD POWER POLE
SAS	SANITARY SEWER
W.V.	WATER VALVE
O/H TELE. (1)	OVERHEAD TELEPHONE LINE (NO. OF LINES)
O/H ELEC. (3)	OVERHEAD ELECTRIC LINE (NO. OF LINES)
EA	EDGE OF ASPHALT
MH	MANHOLE
E.M.	ELECTRIC METER
E.CAB.	ELECTRIC CABINET
TRAF.	TRAFFIC
NG	NATURAL GRADE
A.S.V.	ANTI-SIPHON VALVE
S.C.V.	SPRINKLER CONTROL VALVE
W/COND.	WITH CONDUIT
①	PVC PIPE (VERTICAL) WITH CABLE
②	TELEPHONE BOX ON CONCRETE
+ 5196.3	EXISTING SPOT ELEVATION
	EXISTING CONTOUR
	EXISTING DECIDUOUS TREE
	EXISTING SMALL DECIDUOUS TREE
	EXISTING TREE LINE
—5200—	PROPOSED CONTOUR
	PROPOSED SILT FENCE PER TYPICAL DETAIL (SEE SHEET 2)

NOTES:

1. A TOPOGRAPHIC SURVEY WAS PERFORMED BY JEFF MORTENSEN AND ASSOCIATES FROM SEPT. 9 TO SEPT. 11, 1998.
2. THIS IS NOT A BOUNDARY SURVEY. APPARENT PROPERTY CORNERS ARE SHOWN FOR ORIENTATION ONLY. BOUNDARY DATA SHOWN IS BASED UPON THE PLAT FILED 9-8-87, BK. C34, PAGE 128 AND THE PLAT FILED 2-11-88, BK. C35, PAGE 169.

JEFFREY G. MORTENSEN NEW MEXICO 9547 REGISTERED PROFESSIONAL ENGINEER

11-24-98

File Path: E:\MA\AQUA\920787\
File Name: 920787EC.DWG
Plot Date: 11-24-1998
Plot Time: 09:25 am

JMA — JEFF MORTENSEN & ASSOCIATES, INC.
☐ 6010-B MIDWAY PARK BLVD. N.E.
☐ ALBUQUERQUE ☐ NEW MEXICO 87109
☐ ENGINEERS ☐ SURVEYORS (505) 345-4250

EROSION CONTROL PLAN
AIRPORT TECHNICAL CENTER LOTS 6B-2 AND 8B

DESIGNED BY G.M.
DRAWN BY D.L.M.
APPROVED BY J.G.M.

NO.	DATE	BY	REVISIONS

JOB NO. 920787
DATE 11-1998
SHEET 3 OF 3

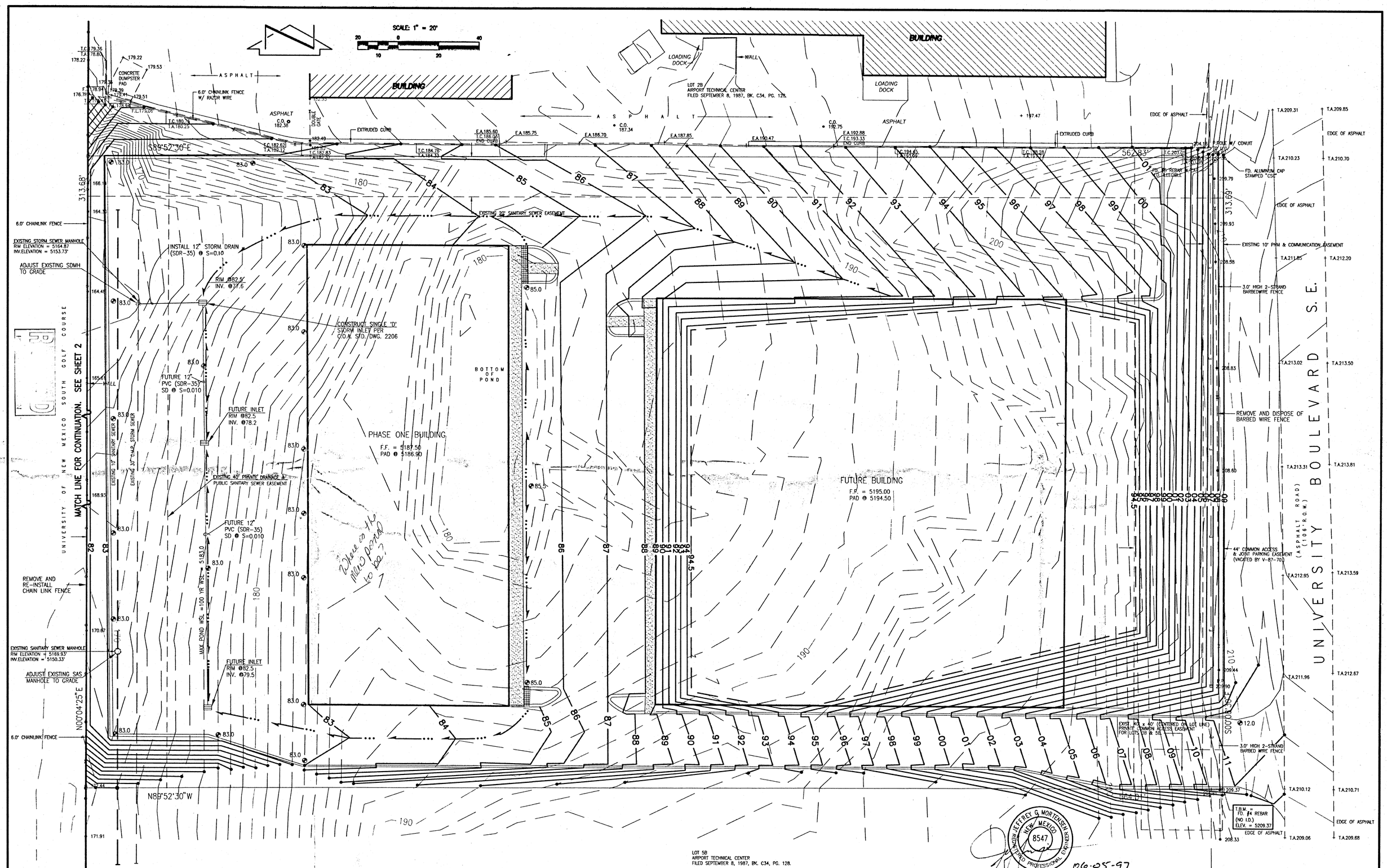

JEFF MORTENSEN & ASSOCIATES, INC.
6010-B MIDWAY PARK BLVD. N.E.
ALBUQUERQUE NEW MEXICO 87109
ENGINEERS SURVEYORS (505) 345-4250

APPROVED FOR ROUGH GRADING

CITY HYDROLOGY DATE

UNM DEPT. OF FACILITY PLANNING DATE

GRADING PLAN
LOT 3B, AIRPORT TECHNICAL CENTER

DESIGNED BY K.D.C.
DRAWN BY J.Y.R.
APPROVED BY J.G.M.

NO.	DATE	BY	REVISIONS

JOB NO. 920785
DATE 06-1997
SHEET 1 OF 6

C:\DATA\ACADWG\920785\920785D Thu Jun 5 09:47:00 1997 -DLM

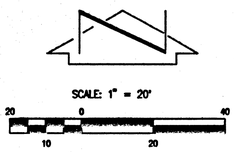

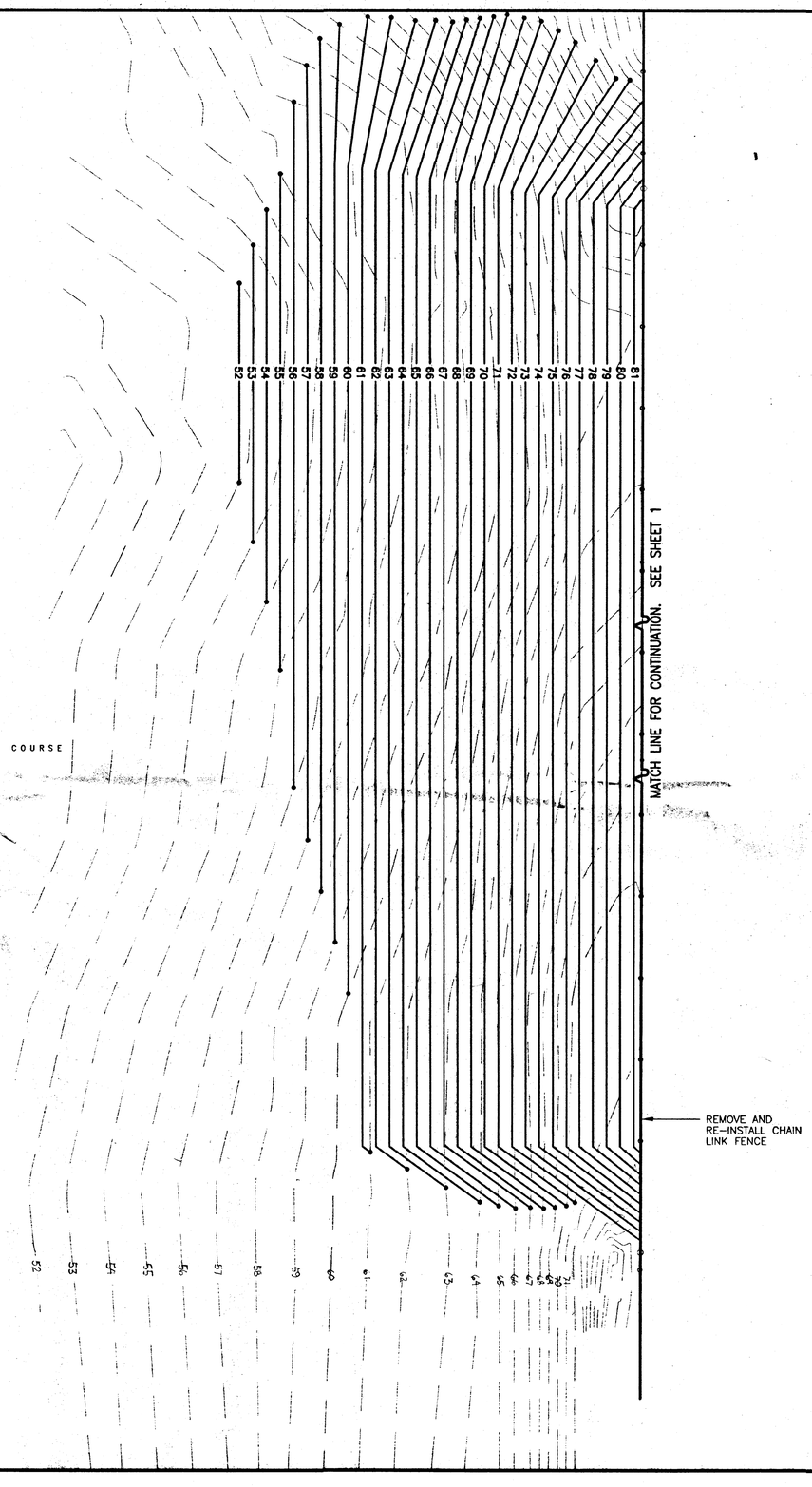

UNIVERSITY OF NEW MEXICO SOUTH GOLF COURSE

EARTHWORK ANALYSIS LOT 3B, AIRPORT TECHNICAL CENTER

DESIGN SURFACE		REFERENCE SURFACE	
COORDINATE FILE = 920785.CRD		COORDINATE FILE = 920785.CRD	
T-NET FILE = 920785ST.TNT		T-NET FILE = 920785EX.TNT	

*** FINE PRECISION ***	CUT	FILL	NET	
BANK VOLUMES (cu yds) :	5957.8391	33272.5372	-27314.6981	
LOOSE VOLUMES (cu yds) :	5957.8391	41590.6715	-35632.8324	
SWELL, SHRINK (%) :	0.0000	25.0000		
	CUT	FILL	NO CHANGE	UNSOLVED
SURFACE AREAS (sq ft) :	52829.4611	163363.5743	0.0000	0.0000
(acres) :	1.2128	3.7503	0.0000	0.0000
AVERAGE DEPTHS (feet) :	3.0449	5.4991		
	WHOLE SITE	GRADED AREA		
ADJUST TO BALANCE (ft) :	-3.4113	-3.4113		

SOLUTION STATISTICS:

# OF TRIANGLES SOLVED :	27288
TOTAL SURFACE AREA :	216193.04
TRIANGLE AVERAGE AREA :	7.92

TIME TO COMPUTE:

FINDING COMMON AREAS :	.05 min
SOLVING VOLUMES :	2.29 min

NO GRUBBING
ASPHALT AREAS LOWERED 0.17' (2")
25% SHRINK FACTOR

NOTE:

Topographic information shown hereon taken from partial survey prepared by Precision Surveys and provided by Knight-Seavey.

JEFFREY G. MORTENSEN
NEW MEXICO
8547
REGISTERED PROFESSIONAL ENGINEER

06-05-97

JEFF MORTENSEN & ASSOCIATES, INC.
6010-B MIDWAY PARK BLVD. N.E.
ALBUQUERQUE NEW MEXICO 87109
ENGINEERS SURVEYORS (505) 345-4250

GRADING PLAN AND EARTHWORK ANALYSIS
LOT 3B, AIRPORT TECHNICAL CENTER

DESIGNED BY K.D.C.
DRAWN BY D.L.M.
APPROVED BY J.G.M.

NO.	DATE	BY	REVISIONS

JOB NO. 920785
DATE 06-1997
SHEET 2 OF 6

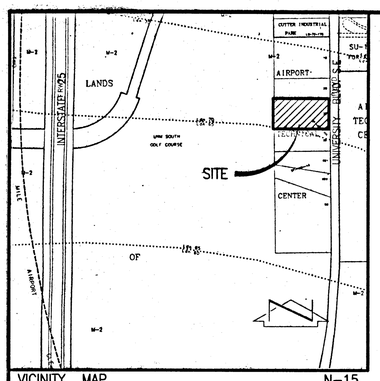

VICINITY MAP
SCALE: 1" = 750'±

N-15

The following items concerning the Lot 3B, Airport Technical Center Drainage Plan are contained hereon:

1. Vicinity Map
2. Grading Plan
3. Calculations
4. Erosion Control Plan

As shown by the Vicinity Map, the site is located on the west side of University Boulevard S.E., between George Rood S.E. and Spirit Drive S.E. The present legal description is "Lot 3B, Airport Technical Center."

As shown by Panel 342 of 825 of the National Flood Insurance Program Flood Insurance Rate Maps published by F.E.M.A. for the County of Bernalillo, New Mexico dated September 20, 1996, this site does not lie within a designated flood hazard zone. As stated by the approved Drainage Plan prepared by BHI, Zone Atlas N-15, Drainage File No. D1A2, the site must discharge at the existing rate established. The remaining runoff will be determined. Per the Rational Method used in the aforementioned Plan, the existing runoff has been calculated to be 11.0 cfs.

The Grading Plan shows: 1) existing and proposed grades indicated by spot elevations and contours at 1'-0" intervals, 2) the limit and character of the existing improvements, 3) the limit and character of the proposed improvements, and 4) the continuity between existing and proposed grades. As shown by this plan, the proposed construction consists of rough grading for two buildings with associated paved parking and landscaping. Developed flows for the site are directed to the west toward an existing private drainage easement. The runoff will be ponded onsite and will be released at a controlled rate into a 30" CMP storm drain within the referenced easement.

Offsite flows enter the site from the south due to existing topography. The offsite basin consists of undeveloped land adjacent to the property line. Minor offsite flows enter the site from the east from University Boulevard. The offsite basin consists of the paved roadway and the area between the roadway and the site's property line. The offsite flows will not be blocked. The topography for the north border of the site is such that it parallels the site and does not allow flows to enter the site. The University South Golf Course lies to the west and is topographically lower, hence does not contribute offsite flows.

The Calculations which appear hereon analyze both the existing and developed conditions for the 100-year, 6-hour rainfall event. The procedure for 40-acre and smaller basins,, as set forth in the revision of section 22.2, Hydrology of the Development Process Manual, Volume 2, Design Criteria, dated January, 1993, has been used to quantify the peak rate of discharge and the volume of runoff generated. As shown by these calculations, there will be runoff generated. As shown an increase in the volume of runoff generated and peak rate of discharge.
Flow into the existing 30" CMP storm drain will be regulated by the discharge capacity of the proposed 12" storm drain as evaluated at the proposed storm inlet for entrance conditions. The ponding volume is calculated by the average end area method.

TOE-IN METHOD

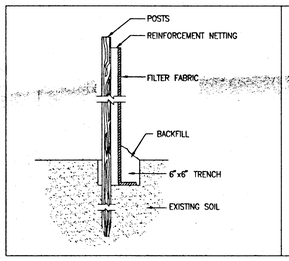

JOINING SECTIONS

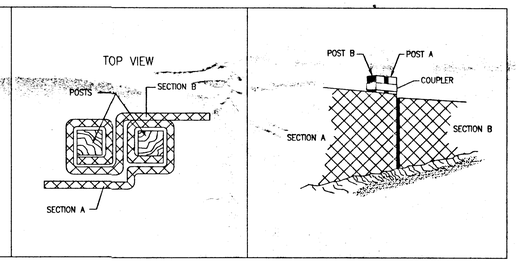

PREFABRICATED SILT FENCE DETAIL
NOT TO SCALE

LEGAL DESCRIPTION

LOT 3B, AIRPORT TECHNICAL CENTER, FILED 9-8-1987, BK. C34, PG. 128.

NOTE:

A TOPOGRAPHIC SURVEY WAS PERFORMED ON AUGUST 22, 1992 AND SEPTEMBER, 1996. BOUNDARY INFORMATION SHOWN HEREON IS BASED UPON THE ABOVE REFERENCED PLAT, THIS SURVEY DOES NOT REPRESENT A BOUNDARY SURVEY.

PROJECT BENCHMARK

CITY OF ALBUQUERQUE BENCHMARK (2-N16), AN STANDARD C.O.A. BRASS CAP SET IN CONCRETE MONUMENT STAMPED "2-N16" AND PROJECTING 0.1 FT. ABOVE GROUND NEAR THE SOUTHWEST CORNER OF ALBUQUERQUE INTERNATIONAL AIRPORT IN AN OPEN PRAIRIE.
ELEVATION = 5304.88 FT. (M.S.L.D.)

T.B.M.

TOP OF REBAR LOCATED BY THE SOUTHEAST PROPERTY CORNER OF SITE, (NO I.D.) AS SHOWN BELOW.
ELEVATION = 5209.37 FT. (M.S.L.D.)

Site Characteristics

1. Precipitation Zone = 2

2. $P_{6,100} = P_{360} =$ 2.35 in.

3. Total Area (A_T) = 4.06 ac

4. Existing Land Treatment

A. Basin A — 176,650/4.06

Treatment	Area (sf/ac)	%
A	18,000/0.41	10.2
B	27,200/0.63	15.4
C	131,450/3.02	74.4

B. Off-Site Basin 1 — 10,280/0.24

Treatment	Area (sf/ac)	%
C	5,940/0.14	57.8
D	4,340/0.10	42.2

C. Off-Site Basin 2 — 32,230/0.74

Treatment	Area (sf/ac)	%
C	32,230/0.74	100

5. Developed Land Treatment

A. Basin A — 176,650/4.06

Treatment	Area (sf/ac)	%
C	68,450/1.57	38.7
D	108,200/2.49	61.3

No landscaping?

6. Existing Condition

A. Basin A

1. Volume

$E_W = (E_AA_A+E_BA_B+E_CA_C+E_DA_D)/A_T$

$E_W = [(0.53)(0.41)+(0.78)(0.63)+(1.13)(3.02)]/4.06 = 1.01$ in.

$V_{100} = (E_W/12)A_T$

$V_{100} = (1.01/12)4.06 = 0.3434$ ac.ft.; 14,960 cf

2. Peak Discharge

$Q_p = Q_{PA}A_A + Q_{PB}A_B + Q_{PC}A_C + Q_{PD}A_D$

$Q_p = Q_{100} = (1.56)(0.41)+(2.28)(0.63)+(3.14)(3.02) = 11.6$ cfs

B. Offsite Basin 1

1. Volume

$E_W = (E_AA_A+E_BA_B+E_CA_C+E_DA_D)/A_T$

$E_W = [(1.13)(0.14)+(2.12)(0.10)]/(0.24) = 1.54$ in.

$V_{100} = (E_W/12)A_T$

$V_{100} = (1.54/12)0.24 = 0.0308$ ac.ft.; 1,340 cf

2. Peak Discharge

$Q_p = Q_{PA}A_A + Q_{PB}A_B + Q_{PC}A_C + Q_{PD}A_D$

$Q_p = Q_{100} = (3.14)(0.14)+(4.70)(0.10) = 0.9$ cfs

C. Offsite Basin 2

1. Volume

$E_W = (E_AA_A+E_BA_B+E_CA_C+E_DA_D)/A_T$

$E_W = [(1.13)(0.74)]/0.74 = 1.13$ in.

$V_{100} = (E_W/12)A_T$

$V_{100} = (1.13/12)0.74 = 0.070$ ac.ft.; 3,035 cf

2. Peak Discharge

$Q_p = Q_{PA}A_A + Q_{PB}A_B + Q_{PC}A_C + Q_{PD}A_D$

$Q_p = Q_{100} = (3.14)(0.74) = 2.3$ cfs

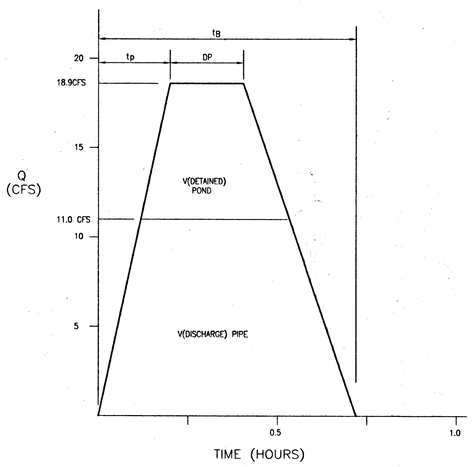

UNIT HYDROGRAPH

7. Developed Condition

A. Basin A

1. Volume

$E_W = (E_AA_A+E_BA_B+E_CA_C+E_DA_D)/A_T$

$E_W = [(1.13)(1.57)+(2.12)(2.49)]/4.06 = 1.74$ in.

$V_{100} = (E_W/12)A_T$

$V_{100} = (1.74/12)4.06 = 0.5887$ ac.ft.; 25,645 cf

2. Peak Discharge

$Q_p = Q_{PA}A_A + Q_{PB}A_B + Q_{PC}A_C + Q_{PD}A_D$

$Q_p = Q_{100} = (3.14)(1.57)+(4.70)(2.49) = 16.6$ cfs

B. Offsite Basin 1
(No Change)

C. Offsite Basin 2
(No Change)

D. Pond Volume Calculations

Elevation (ft)	Area (sf)	Volume (cf)	Total Volume (cf)
82.5	0		
		7,220	7,220
83.0	8,875		
		14,395	22,155
83.5	30,865		

Unit Hydrograph

$t_B = (2.017 * E * A_T/Q_p) - (0.25 * A_D/A_T)$

$= (2.017 * 1.74 * 4.06/16.7) - (0.25 * 2.49/4.06)$

$= 0.6986$ hrs $= 41.92$ minutes

$t_p = (0.7 * t_c) + \{[1.6 - (A_D/A_T)]/12\}$

$= (0.7 * 0.2) + \{[1.6 - (2.49/4.06)]/12\}$

$= 0.2222$ hours $= 13.33$ minutes

D_p = peak $= (0.25 * A_D/A_T)$

$= (0.25 * 2.49/4.06)$

$= 0.1533$ hours $= 9.20$ minutes

$V_{discharge} = [(0.5)(0.1293)(11.0)+(0.5)(0.1880)(11.0)+(11.0)(0.3813)]3600$

$[0.7112 + 1.034 + 4.1943]3600 = 21,385$ cf

$V_{hydrograph} = [(0.5)(0.2222)(18.9)]+[(0.5)(0.3231)(18.9)]+[(18.9)(0.1533)]$

$= (2.10 + 3.05 + 2.90)3600 = 28,980$ cf

$V_{hydrograph} > V_{100}$

Use $V_{hydrograph}$

$V_{pond} = 22,165$ cf

$V_{discharge} = 21,385$ cf

$V_{capacity} = V_{pond} + V_{discharge} = 22,165 + 21,385 = 43,550$ cf

$V_{capacity} > V_{hydrograph}$

$V_{detained} = V_{hydrograph} - V_{discharge} = 28,980 - 21,385 = 7,595$ cf

Volume @ 83.5 WSL = 22,155 cf > $V_{detained}$

100 YR WSL = 83.0; Volume = 7,220 = $V_{detained}$ << V pond

V pond = 22,155 cf.

E. Storm Drain Hydralics

1. Discharge Capacity for 12" Storm Drain

Mannings Equation for full pipe flow

$Q = (1.49/N)*A*R^{2/3}*S^{1/2}$

N = 0.013
S = 0.10
R = 0.250'
A = 0.785 sf
$Q = (1.49/0.013)*0.250*1.0^{2/3}*0.03^{1/2}$
Q disch = 11.3cfs

2. Inlet capacity for Single 'D' storm inlet

A = 4.56 sf
Assume inlet half clogged: A = 2.28 sf

$Q = C*A*(2*g*h)^{1/2}$

C = 0.6
A = 2.28 sf
g = 32.2 ft/s^2
h = 1.0 ft

$Q = 0.6*2.28*(2*32.2*1)^{1/2}$
$Q_{inlet} = 11.0$ cfs

3. Orifice equation for 12" outlet pipe

$Q = C*A*(2*g*h)^{1/2}$

C = 0.6
A = 1.57 sf
g = 32.2 ft/s^2
h = 4.4 ft

$Q = 0.6*1.57*(2*32.2*4.4)^{1/2}$
$Q_{outlet} = 15.9$ cfs

$Q_{inlet} = 11.0$ cfs < 11.6 cfs = $Q_{existing}$

8. Comparison

A. $\Delta V_{100} = 28,500 - 14,960 = 13,540$ cf (increase)

B. $\Delta Q_{100} = 11.6 - 11.0 = 0.6$ cfs (increase)

GENERAL NOTES:

1. ALL WORK DETAILED ON THESE PLANS TO BE PERFORMED UNDER CONTRACT SHALL, EXCEPT AS OTHERWISE STATED OR PROVIDED FOR HEREON, BE CONSTRUCTED IN ACCORDANCE WITH THE NEW MEXICO STANDARD SPECIFICATIONS FOR PUBLIC WORKS CONSTRUCTION - 1987, PUBLISHED BY THE NEW MEXICO CHAPTER AMERICAN PUBLIC WORKS ASSOCIATION.

2. TWO (2) WORKING DAYS PRIOR TO ANY EXCAVATION, CONTRACTOR MUST CONTACT NEW MEXICO ONE CALL SYSTEM, 260-1990, (ALBUQUERQUE AREA), 1-800-321-ALERT(2537) (STATEWIDE), FOR LOCATION OF EXISTING UTILITIES.

3. IF ANY UTILITY LINES, PIPELINES, OR UNDERGROUND UTILITY LINES ARE SHOWN ON THESE DRAWINGS, THEY ARE SHOWN IN AN APPROXIMATE MANNER ONLY, AND SUCH LINES MAY EXIST WHERE NONE ARE SHOWN. IF ANY SUCH EXISTING LINES ARE SHOWN, THE LOCATION IS BASED UPON INFORMATION PROVIDED BY THE OWNER OF SAID UTILITY, AND THE INFORMATION MAY BE INCOMPLETE, OR MAY BE OBSOLETE BY THE TIME CONSTRUCTION COMMENCES. THE ENGINEER HAS CONDUCTED ONLY PRELIMINARY INVESTIGATION OF THE LOCATION, DEPTH, SIZE, OR TYPE OF EXISTING UTILITY LINES, PIPELINES, OR UNDERGROUND UTILITY LINES. THIS INVESTIGATION IS NOT CONCLUSIVE, AND MAY NOT BE COMPLETE, THEREFORE, MAKES NO REPRESENTATION PERTAINING THERETO, AND ASSUMES NO RESPONSIBILITY OR LIABILITY THEREFORE. THE CONTRACTOR SHALL INFORM ITSELF OF THE LOCATION OF ANY UTILITY LINE, PIPELINE, OR UNDERGROUND UTILITY LINE IN OR NEAR THE AREA OF THE WORK IN ADVANCE OF AND DURING EXCAVATION WORK. THE CONTRACTOR IS FULLY RESPONSIBLE FOR ANY AND ALL DAMAGE CAUSED BY ITS FAILURE TO LOCATE, IDENTIFY AND PRESERVE ANY AND ALL EXISTING UTILITIES, PIPELINES, AND UNDERGROUND UTILITY LINES. IN PLANNING AND CONDUCTING EXCAVATION, THE CONTRACTOR SHALL COMPLY WITH STATE STATUTES, MUNICIPAL AND LOCAL ORDINANCES, RULES AND REGULATIONS, IF ANY, PERTAINING TO THE LOCATION OF THESE LINES AND FACILITIES.

4. SHOULD A CONFLICT EXIST BETWEEN THESE PLANS AND ACTUAL FIELD CONDITIONS, THE CONTRACTOR SHALL PROMPTLY NOTIFY THE ENGINEER IN WRITING SO THAT THE CONFLICT CAN BE RESOLVED WITH A MINIMUM AMOUNT OF DELAY FOR ALL PARTIES. THE CONTRACTOR SHALL BE RESPONSIBLE FOR ALL INTERPRETATIONS IT MAKES WITHOUT FIRST CONTACTING THE ENGINEER AS REQUIRED ABOVE.

5. THE CONTRACTOR SHALL MAINTAIN ACCESS TO ADJACENT PROPERTIES DURING CONSTRUCTION.

6. ALL WORK ON THIS PROJECT SHALL BE PERFORMED IN ACCORDANCE WITH APPLICABLE FEDERAL, STATE AND LOCAL LAWS, RULES AND REGULATIONS CONCERNING SAFETY AND HEALTH.

7. THE CONTRACTOR SHALL ENSURE THAT NO SOIL ERODES FROM THE SITE INTO PUBLIC RIGHT-OF-WAY OR ONTO PRIVATE PROPERTY.

8. THE CONTRACTOR SHALL PROMPTLY CLEAN UP ANY MATERIAL EXCAVATED WITHIN THE PUBLIC RIGHT-OF-WAY SO THAT THE EXCAVATED MATERIAL IS NOT SUSCEPTIBLE TO BEING WASHED DOWN THE STREET.

9. CONTRACTOR SHALL SECURE "TOPSOIL DISTURBANCE PERMIT" PRIOR TO BEGINNING CONSTRUCTION.

10. ANY AREAS OF EXCESS DISTURBANCE (TRAFFIC ACCESS, STORAGE YARD EXCAVATED MATERIAL, ETC.) SHALL BE RE-SEEDED ACCORDING TO C.O.A. SPECIFICATION 1012 "NATIVE GRASS SEEDING". THIS WILL BE CONSIDERED INCIDENTAL TO CONSTRUCTION, THEREFORE, NO SEPARATE PAYMENT WILL BE MADE.

11. CONTRACTOR SHALL NOTIFY THE ENGINEER NOT LESS THAN SEVEN (7) DAYS PRIOR TO STARTING WORK IN ORDER THAT THE ENGINEER MAY TAKE NECESSARY MEASURES TO ENSURE THE PRESERVATION OF SURVEY MONUMENTS. CONTRACTOR SHALL NOT DISTURB PERMANENT SURVEY MONUMENTS WITHOUT THE CONSENT OF THE ENGINEER AND SHALL NOTIFY THE ENGINEER AND BEAR THE EXPENSE OF REPLACING ANY THAT MAY BE DISTURBED WITHOUT PERMISSION. REPLACEMENT SHALL BE DONE ONLY BY THE ENGINEER. WHEN A CHANGE IS MADE IN THE FINISHED ELEVATION OF THE PAVEMENT OF ANY ROADWAY IN WHICH A PERMANENT SURVEY MONUMENT IS LOCATED, CONTRACTOR SHALL, AT HIS OWN EXPENSE, ADJUST THE MONUMENT COVER TO THE NEW GRADE UNLESS OTHERWISE SPECIFIED.

12. ALL WORK WITHIN CITY RIGHT-OF-WAY SHALL BE PERFORMED IN ACCORDANCE WITH APPLICABLE CITY OF ALBUQUERQUE STANDARDS AND PROCEDURES.

13. IF THE REMOVAL OF EXISTING CURB AND GUTTER, SIDEWALK, AND/OR PAVING IS REQUIRED, THE CONTRACTOR SHALL SAWCUT AND/OR REMOVE TO THE NEAREST JOINT. WHEN ABUTTING NEW PAVEMENT TO EXISTING, THE CONTRACTOR SHALL CUT BACK THE EXISTING PAVING TO A STRAIGHT LINE IN ORDER TO REMOVE ANY BROKEN OR CRACKED PAVEMENT. CURB AND GUTTER AND/OR PAVEMENT SHOWN AS EXISTING AND NOT TO BE REMOVED UNDER THIS CONTRACT AND WHICH IS DAMAGED OR DISPLACED BY THE CONTRACTOR SHALL BE REMOVED AND REPLACED BY THE CONTRACTOR AT THE CONTRACTOR'S EXPENSE.

14. A DISPOSAL SITE FOR ALL EXCESS EXCAVATION MATERIAL (CONTAMINATED OR OTHERWISE), ASPHALTIC PAVING, CONCRETE PAVING, ETC. SHALL BE OBTAINED BY THE CONTRACTOR IN COMPLIANCE WITH APPLICABLE REGULATIONS. ALL COSTS INCURRED IN OBTAINING A DISPOSAL SITE AND IN HAUL THERETO SHALL BE CONSIDERED INCIDENTAL TO CONSTRUCTION, THEREFORE, NO SEPARATE PAYMENT SHALL BE MADE.

15. A BORROW SITE FOR IMPORT MATERIAL SHALL BE OBTAINED BY THE CONTRACTOR IN COMPLIANCE WITH APPLICABLE REGULATIONS. ALL COSTS INCURRED IN OBTAINING A BORROW SITE AND IN HAUL THERETO SHALL BE CONSIDERED INCIDENTAL TO CONSTRUCTION, THEREFORE, NO SEPARATE PAYMENT SHALL BE MADE.

16. THE CONTRACTOR SHALL BE RESPONSIBLE FOR SAFELY OBTAINING THE REQUIRED COMPACTION. THE CONTRACTOR SHALL SELECT AND USE METHODS WHICH SHALL NOT BE INJURIOUS OR DAMAGING TO THE EXISTING FACILITIES AND STRUCTURES WHICH SURROUND THE WORK AREAS.

17. THE CONTRACTOR SHALL CONFINE HIS WORK WITHIN THE CONSTRUCTION LIMITS IN ORDER TO PRESERVE THE EXISTING IMPROVEMENTS AND SO AS NOT TO INTERFERE WITH THE OPERATIONS OF THE EXISTING FACILITIES.

18. ALL FILL MATERIAL SHALL BE FREE FROM VEGETATION, DEBRIS AND OTHER DELETERIOUS MATERIALS.

19. ALL FILL MATERIAL SHALL BE COMPACTED TO A MINIMUM OF 90% ASTM D-1557 UNLESS A GREATER COMPACTION REQUIREMENT IS OTHERWISE SPECIFIED.

20. ALL EXISTING UTILITIES ENCOUNTERED WITHIN THE WORK LIMITS SHALL BE ADJUSTED TO GRADE AT THE CONTRACTOR'S EXPENSE AND SHALL BE CONSIDERED INCIDENTAL TO CONSTRUCTION.

21. CAUTION: THESE DRAWINGS DO NOT INCLUDE NECESSARY COMPONENTS FOR CONSTRUCTION SAFETY WHICH SHALL REMAIN THE RESPONSIBILITY OF THE CONTRACTOR.

JEFFREY G. MORTENSEN
NEW MEXICO
8547
REGISTERED PROFESSIONAL ENGINEER
06-05-97

JEFF MORTENSEN & ASSOCIATES, INC.
6010-B MIDWAY PARK BLVD. N.E.
ALBUQUERQUE NEW MEXICO 87109
ENGINEERS SURVEYORS (505) 345-4250

DRAINAGE PLAN, CALCULATIONS, NOTES AND SECTIONS
LOT 3B, AIRPORT TECHNICAL CENTER

DESIGNED BY J.G.M./K.D.C.
DRAWN BY S.G.H./J.Y.R.
APPROVED BY J.G.M.

NO.	DATE	BY	REVISIONS

JOB NO. 920785
DATE 06-1997
SHEET 3 OF 6

C:\DATA\ACADWG\92078462 Wed Jun 4 14:14:34 1997 -JYR

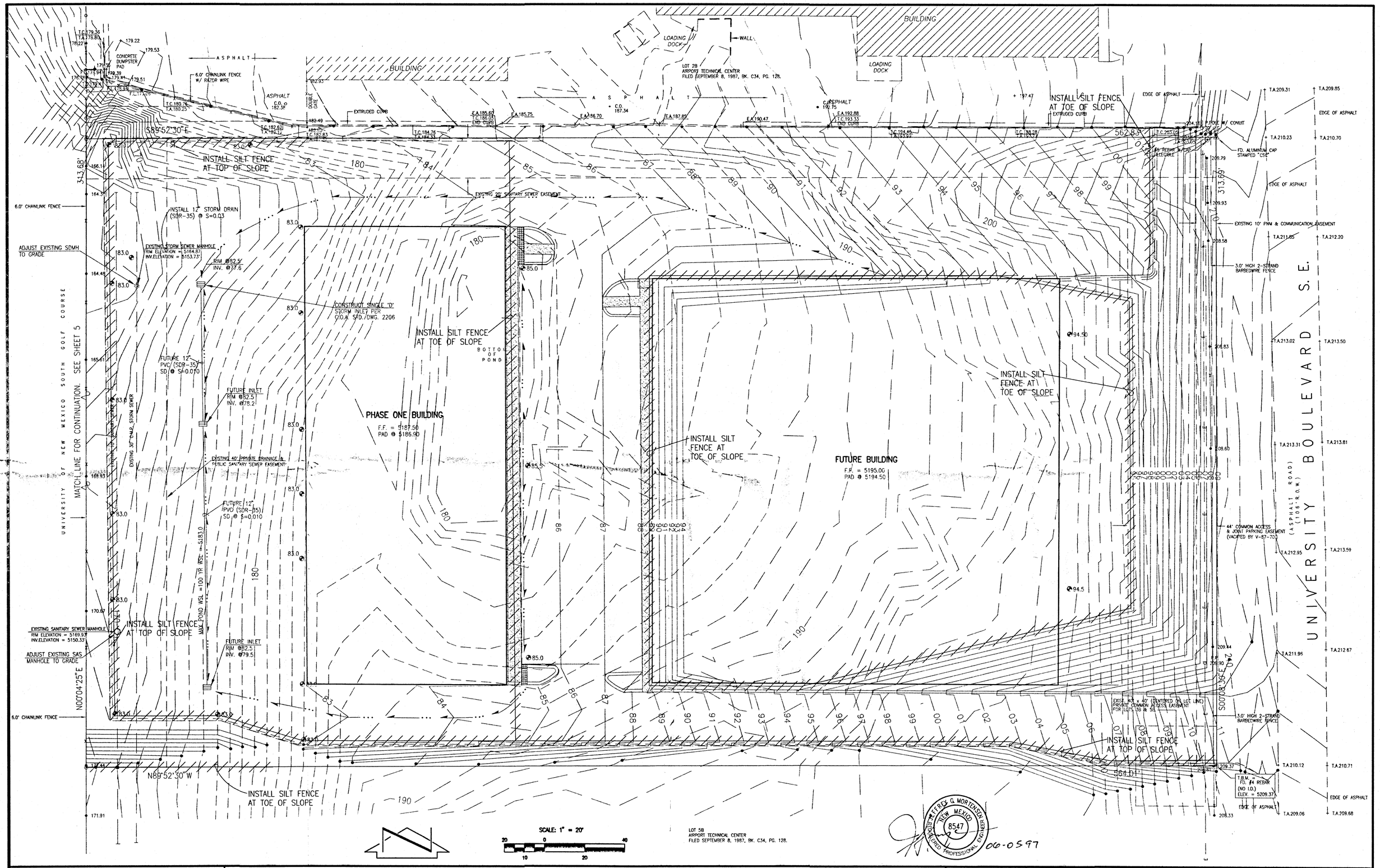

JEFF MORTENSEN & ASSOCIATES, INC.
ENGINEERS ☐ SURVEYORS (505) 345-4250
6010-B MIDWAY PARK BLVD. N.E.
ALBUQUERQUE ☐ NEW MEXICO 87109

EROSION CONTROL PLAN
LOT 3B, AIRPORT TECHNICAL CENTER

DESIGNED BY K.D.C.
DRAWN BY J.Y.R.
APPROVED BY J.G.M.

NO.	DATE	BY	REVISIONS

JOB NO. 920785
DATE 06-1997
SHEET 4 OF 6

C:\DATA\ACADDWG\920785E Wed Jun 4 14:06:51 1997 -JYR

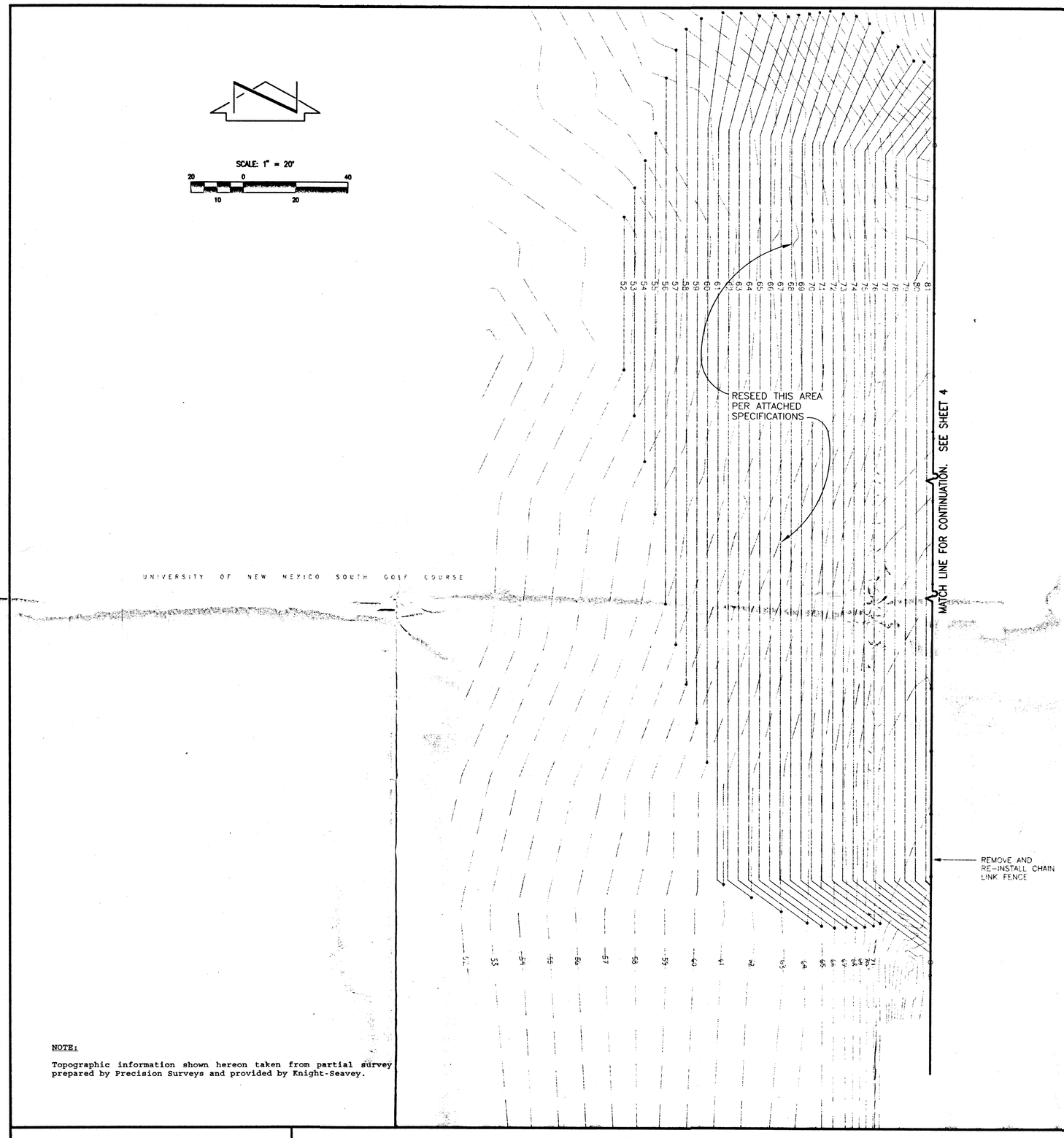

NOTE:

Topographic information shown hereon taken from partial survey prepared by Precision Surveys and provided by Knight-Seavey.

SEEDING SPECIFICATIONS
(PER C.O.A. STANDARDS)

1012.4.1.1 Sandy Soils: (mainly west side areas). Seed rate is given in pounds of pure live seed (P.L.S.) per acre.

Variety/ Common Name	Genus/ Species	P.L.S./Acre
"Paloma" Indian rice gras	Oryzopsis hymenoides	5.0
"Viva" Galleta grass	Hilaria jamesii	1.0
"Niner" Side oats grama	Bouteloua curtipendula	3.0
"Hatchita" Blue grama	Bouteloua gracilis	1.0
Sand dropseed (NM Region)	Sporobolus cryptandrus	1.0
Fourwing saltbush (NM Region)	Atriplex canescens (de-winged)	1.0
Total rate		12.0 lbs/ acre

JEFFREY G. MORTENSEN NEW MEXICO 8547 REGISTERED PROFESSIONAL ENGINEER

06-05-97

JEFF. MORTENSEN & ASSOCIATES, INC.
6010-B MIDWAY PARK BLVD. NE.
ALBUQUERQUE NEW MEXICO 87109
ENGINEERS SURVEYORS (505) 345-4250

EROSION CONTROL PLAN
LOT 3B, AIRPORT TECHNICAL CENTER

DESIGNED BY K.D.C.
DRAWN BY D.L.M.
APPROVED BY J.G.M.

NO.	DATE	BY	REVISIONS

JOB NO. 920785
DATE 06-1997
SHEET 5 OF 6

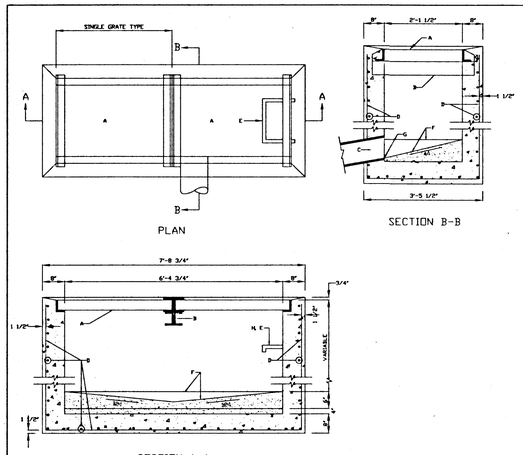

GENERAL NOTES:

1. FOR SINGLE GRATE TYPE STORM INLET DELETE CENTER SUPPORT AND MOVE ONE END WALL TO FORM NEW SINGLE GRATE INLET.
2. STORM INLET GUTTER TRANSITION WILL BE SHOWN ON THE CONSTRUCTION PLANS.
3. OUTLET PIPE SIZE. PER DESIGN REQUIREMENT.
4. FOR FRAME & GRATING, SEE DWG 2216, 2220 & 2221.
5. FOR CENTER SUPPORT ASSEMBLY. SEE DWG 2215.

CONSTRUCTION NOTES:

A. FRAME & GRATE
B. CENTER SUPPORT ASSEMBLY.
C. CUT ONE HORIZONTAL AND ONE VERTICAL BAR MAX. AT PIPE OPENING.
D. NO. 4 BARS AT 6" O.C. EACH WAY.
E. USE STANDARD STEPS. SEE DWG 2229.
F. CONC. FILL. SEE NOTE C DWG 2201.
G. INVERT PER DESIGN.
H. INSTALL STEPS ON DOWNSTREAM FACE.

REVISIONS	CITY OF ALBUQUERQUE
12-21-92	DRAINAGE STORM INLET DOUBLE "D" DWG. 2206

AUG. 1986

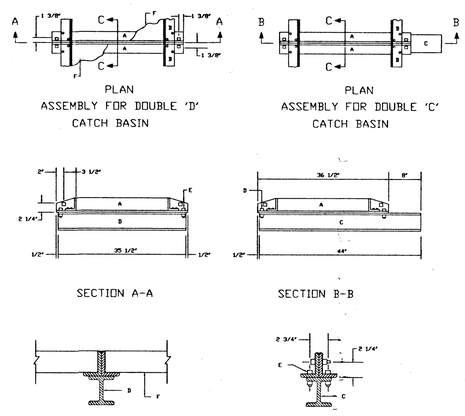

GENERAL NOTES:

1. ALL BOLTS USED IN CENTER SUPPORT ASSEMBLY SHALL BE 1/2".
2. FRAME MAY BE RIVETED OR WELDED.
3. BOLTS (NOT RIVETS OR WELDS) SHALL BE USED TO JOIN TWO OR MORE FRAMES TOGETHER AND TO THE WF BEAM.
4. AFTER CLEANING SURFACE OF SCALE, RUST, ETC., GRATING, FRAME AND CENTER SUPPORT SHALL BE PAINTED WITH ONE SHOP COAT RED OXIDE, TWO FINISH COATS ALUMINUM PAINT (AASHTO M 69).
5. FOR SINGLE TYPE CATCH BASIN, MOVE ONE END WALL TO FROM NEW SINGLE GRATE CATCH BASIN.

CONSTRUCTION NOTES:

A. 4" X 3" X 1/2" X 36 1/2"
B. 3 1/2" X 3" X 3/8" X 40 3/8"
C: 5 X 5 WF 18.5 FLANGE BEAM, FOR CATCH BASIN TYPE DOUBLE 'C'.
D. 5 X 5 WF 18.5 FLANGE BEAM, FOR CATCH BASIN TYPE DOUBLE 'D'.
E. 1/2" BOLTS, WITH NUTS TO SECURE ANGLE TO BEAM
F. FOR FRAME AND GRATE SEE DWGS. 2216, 2220, 2221.

REVISIONS	CITY OF ALBUQUERQUE
	DRAINAGE STORM INLET CENTER SUPPORT ASSEMBLY DWG.2215

AUG. 1986

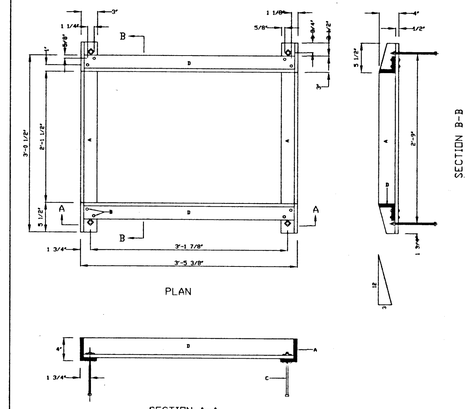

GENERAL NOTES:

1. ALL EXPOSED METAL PARTS SHALL BE PAINTED PRIOR TO ASSEMBLY. WELDING, MACHINING AND DRILLING SHALL BE DONE PRIOR TO PAINTING. ALL DIMENSIONS ARE FINISHED DIMENSIONS.
2. ALL PARTS SHALL BE OF STRUCTURAL STEEL, GRADE 36.
3. AFTER CLEANING SURFACE OF SCALE, RUST, ETC., GRATING AND FRAME SHALL BE PAINTED WITH ONE SHOP COAT RED OXIDE, TWO FINISH COATS ALUMINUM PAINT (AASHTO M 69).
4. FRAME MAY BE WELDED OR RIVETED.

CONSTRUCTION NOTES:

A. 4" X 3" X 1/2" X 3'- 1/2"∠ .
B 2 - 3/8" RIVETS AT EACH CORNER, SEE GENERAL NOTE NO. 5.
C. 4 - 1/2" X 8" BOLTS WITH SQUARE HEAD & NUT AT EACH CORNER FOR ANCHORING FRAME INTO CONCRETE WALL.
D. 3 - 1/2" X 3" X 3/8" X 3 - 4 - 3/8" ∠ .

REVISIONS	CITY OF ALBUQUERQUE
	DRAINAGE STORM INLET FRAME DWG.2216

AUG. 1986

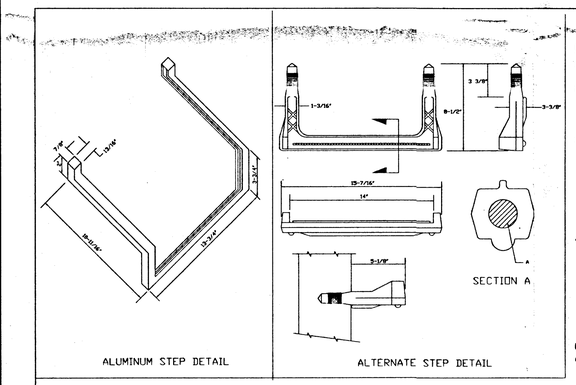

GENERAL NOTES:

1. ALUMINUM STEP, ALCOA NO 12653A OR APPROVED EQUAL.
2. ALTERNATE STEP SHALL BE POLYPROPLENE - MOLDED OVER 1/2" STEEL REINFORCEMENT MODEL NO. PS-2-PFS, M.A. INDUSTRIES IN, OR APPROVED EQUAL.
3. STORM INLETS: INLETS GREATER THAN 4' DEEP SHALL HAVE STEPS INSTALLED IN DOWNSTREAM FACE OR INLET WALLS. STEPS SHALL PROTRUDE 7" FROM THE WALL AND BE CENTERED 12" FROM FACE OF CURB. STEPS SHALL BE 12" APART, WITH THE TOP STEP +/- 18" FROM TOP OF FRATE AND THE BOTTOM STEP NO MORE THAN 16" ABOVE THE CONCRETE FILL IN THE BOTTOM OF THE INLET.
4. DRAINAGE CHANNELS: CHANNELS SHALL HAVE STEPS FOR ACCESS AND RESCUE INSTALLED ER DETAILS ON DWG. 2261. STEPS SHALL BE INSTALLED ON BOTH SIDES OF THE CHANNEL AND SHALL BE LOCATED IMMEDIATELY BEFORE THE INLET AND AFTER OUTLET TRANSITIONS FOR CROSSING STRUCTURES OR AS NOTES ON THE PLANS.

CONSTRUCTION NOTES:

A. 1/2" GRATE 60 STEEL REINFORCEMENT.

REVISIONS	CITY OF ALBUQUERQUE
08-25-92	DRAINAGE STEP DETAILS DWG. 2229

AUG. 1986

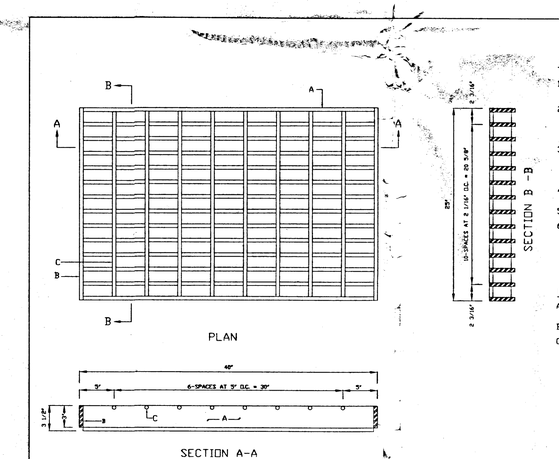

GENERAL NOTES:

1. ALL BARS SHALL BE STRUCTURAL GRADE STEEL, GRADE A36.
2. THE GRATE SHALL BE WELDED WITH 1/8" FILLET WELD AROUND BOTH SIDES OF CROSS BARS. 1/4" FILLET WELD BOTH SIDES OF BEARING BARS TO END BARS.
3. AFTER CLEANING SURFACE OF SCALE, RUST, OILS, ETC., PAINT GRATE WITH ONE SHOP COAT RED OXIDE, TWO FINISH COATS OF ALUMINUM PAINT (AASHTO M 69).
4. TOP OF CROSS BARS SHALL BE FLUSH WITH TOP OF GRATE.
5. GRIND WELDS FLUSH WITH BEARING BARS.
6. WHEN INSTALLED IN FRAME, PUSH TIGHT TO ONE SIDE. OTHER SIDE SHALL HAVE 1/2" MAX. OPENING. SPACERS WELDED TO FRAME MAY BE USED IF REQUIRED TO KEEP 1/2" SPACE OR LESS.

CONSTRUCTION NOTES:

A. BEARING BARS. (13) 1/2" X 3 1/2" X 39".
B. END BARS (2) 1/2" X 3" X 25".
C. CROSS BARS, (7) 1/2" DIA X 24.

REVISIONS	CITY OF ALBUQUERQUE
08-25-92	DRAINAGE STORM INLET DWG. 2220

AUG. 1986

JEFFREY G. MORTENSEN NEW MEXICO 8547 REGISTERED PROFESSIONAL ENGINEER

06-05-97

JEFF MORTENSEN & ASSOCIATES, INC.
☐ 6010-B MIDWAY PARK BLVD. N.E.
☐ ALBUQUERQUE ☐ NEW MEXICO 87109
☐ ENGINEERS ☐ SURVEYORS (505) 345-4250

STORM INLET DETAILS
LOT 3B, AIRPORT TECHNICAL CENTER

DESIGNED BY M.G.D.
DRAWN BY S.G.H.
APPROVED BY J.G.M.

NO.	DATE	BY	REVISIONS

JOB NO. 920785
DATE 06-1997
SHEET 6 OF 6

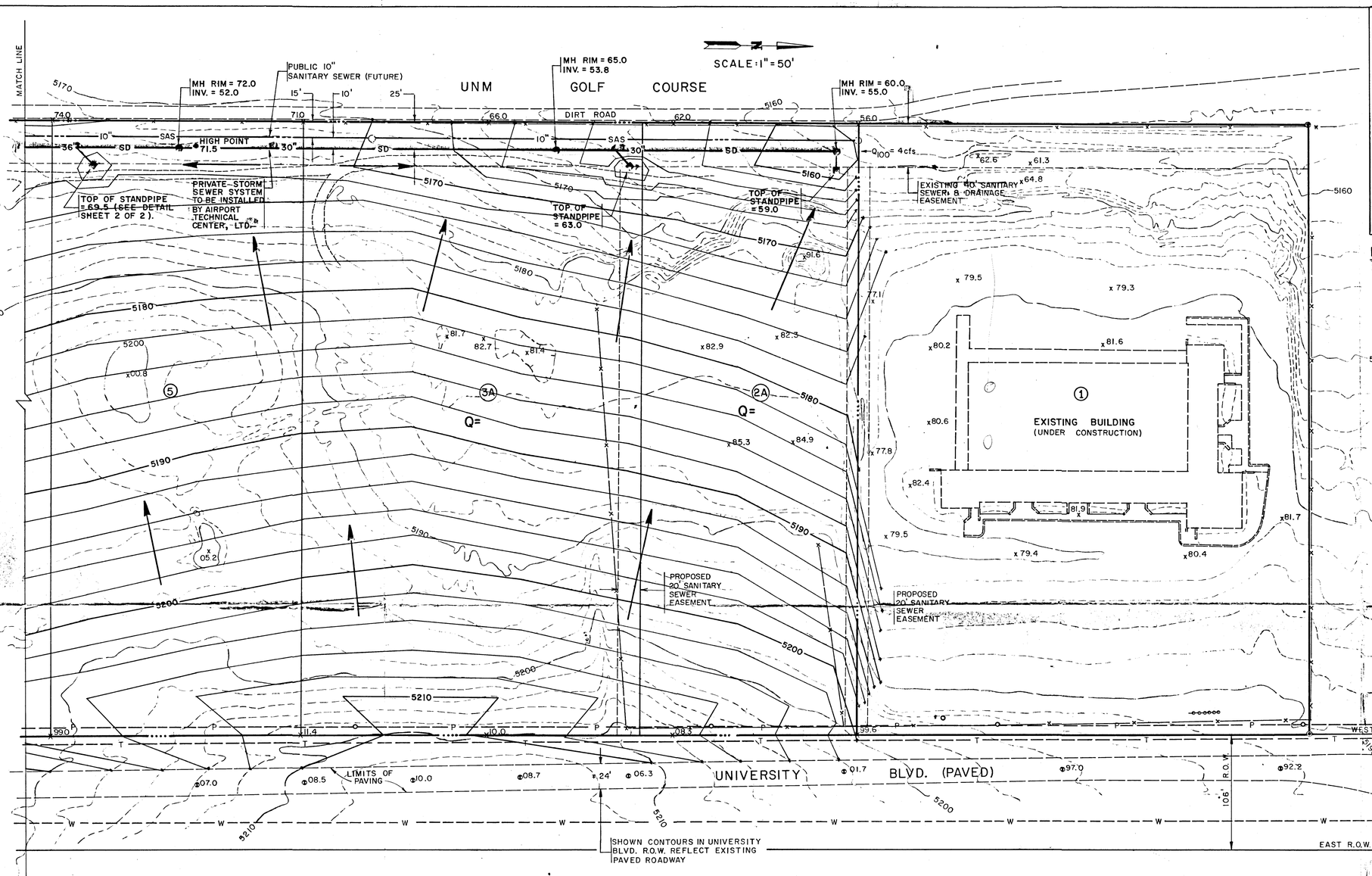

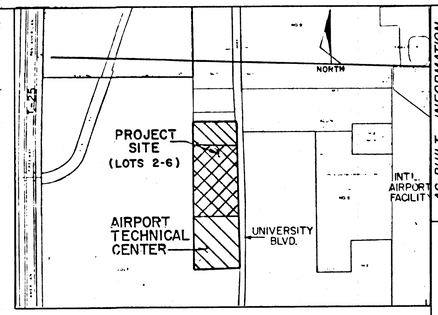

LOCATION MAP

ZONE ATLAS PAGE N-15

LEGAL DESCRIPTION

LOTS 2-6, DIVISION OF LAND OF AIRPORT TECHNICAL CENTER

NOTES:

1. The developer is attempting to coordinate construction such that the proposed private storm sewer is installed coincidentally with the public sanitary sewer.
2. The developer will obtain construction bids prior to making a final determination of pipe material for the storm sewer system. Alternates include corrugated metal (CMP) and Permaloc (PVC) pipe. Pipe sizes shown on the plan are not final and reflect the use of CMP. Permaloc will allow smaller pipe sizes.
3. A preliminary plan and profile sheet for the storm sewer system is enclosed in the bound report. A final construction drawing will be prepared in the near future.

A BERM WITH THE DIMENSIONS SHOWN BELOW SHALL BE BUILT ALONG THE NORTHERN, SOUTHERN AND WESTERN BOUNDARIES AND MAINTAINED DURING ALL PHASES OF CONSTRUCTION AND THEREAFTER UNTIL ALL LOTS HAVE BEEN DEVELOPED

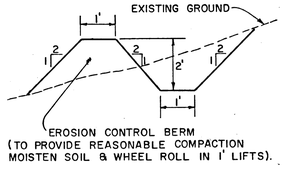

EROSION CONTROL PLAN

GRADING AND CONSTRUCTION NOTES:

1. Shown locations of existing lines, both overhead and underground, are approximate only. Contractor shall verify locations prior to beginning work by calling Blue Stakes.
2. Grading tolerances shall be ± 0.5' from the grades indicated on this plan.
3. Graded and excavated surfaces shall be scarified, brought to optimim moisture content for a minimum of 8 inches and compacted to a minimum of 90% of maximum density by ASTM D-1557.
4. Do not puddle or jet backfill.
5. Manholes constructed on the storm sewer system shall be per City Standard Detail S-2.

REVISION:

THIS PLAN HAS BEEN REVISED TO REFLECT NEW PLATTING OF THE SITE.

LEGEND

97.7	PROPOSED SPOT ELEVATION FOR FUTURE UNIVERSITY BLVD. STREET IMPROVEMENTS
x79.4	EXISTING SPOT ELEVATION
● 71.5	PROPOSED SPOT ELEVATION
o	POWER POLE
—T—	EXISTING TELEPHONE LINE
—P—	EXISTING POWER LINE
—W—	EXISTING WATER LINE
	EXISTING CONTOUR
—5180—	PROPOSED CONTOUR
—SD—	PROPOSED STORM DRAIN LINE
	PROPOSED STORM DRAIN MANHOLE
—SAS—	FUTURE SANITARY SEWER LINE
	INLET (STANDPIPE)
	PROJECT BOUNDARY
(4)	LOT NUMBER
	DIRECTION OF FLOW

RECEIVED DEC 09 1986 HYDROLOGY SECTION

APPROVED FOR ROUGH GRADING (± 1.0')
Roger A. Green PE 12-10-86
HYDROLOGY ENGINEER DATE

APPROVED FOR ROUGH GRADING (± 1.0')
Roger A. Green PE 5-12-86
HYDROLOGY ENGINEER DATE

CITY OF ALBUQUERQUE

TITLE:
AIRPORT TECHNICAL CENTER
GRADING & DRAINAGE PLAN

APPROVALS	ENGINEER	DATE	APPROVALS	ENGINEER	DATE
City Engineer			Liquid Waste		
A.C.E.-Design			Traffic		
A.C.E.-Hydrology			Water		

DRAWING NO. | MAP NO. N-15 | SHEET 1 OF 2

BHI JOB Nº 61673

AS BUILT INFORMATION
CONTRACTOR — DATE
WORK STAKED BY — DATE
ACCEPTANCE BY — DATE
FIELD CHECKED BY — DATE
DRAWINGS CORRECTED BY — DATE
MICRO-FILM INFORMATION
RECORDED BY — DATE
NO.

BENCH MARKS
CITY BENCH MARK 2-N16, STD. ACS. BRASS TABLET LOCATED SOUTHWEST CORNER OF THE ALBUQUERQUE INTERNATIONAL AIRPORT IN AN OPEN PRARIE. ELEV. 5304.88

SURVEY INFORMATION
FIELD NOTES

NO.	BY	DATE

ENGINEER'S SEAL
JAMES R. TOMMELLEO NEW MEXICO REGISTERED PROFESSIONAL ENGINEER 7539

NO.	DATE	REMARKS	BY
2	12-1-86	REVISED LOT LINES	JT
1	5/6/86	REVISED 60" TO 36" SD	JT

REVISIONS

DESIGN
DESIGNED BY RB — DATE 3/27/86
DRAWN BY RB, TG — DATE 3/27/86
CHECKED BY JT — DATE

BRUNING 44-132 62236

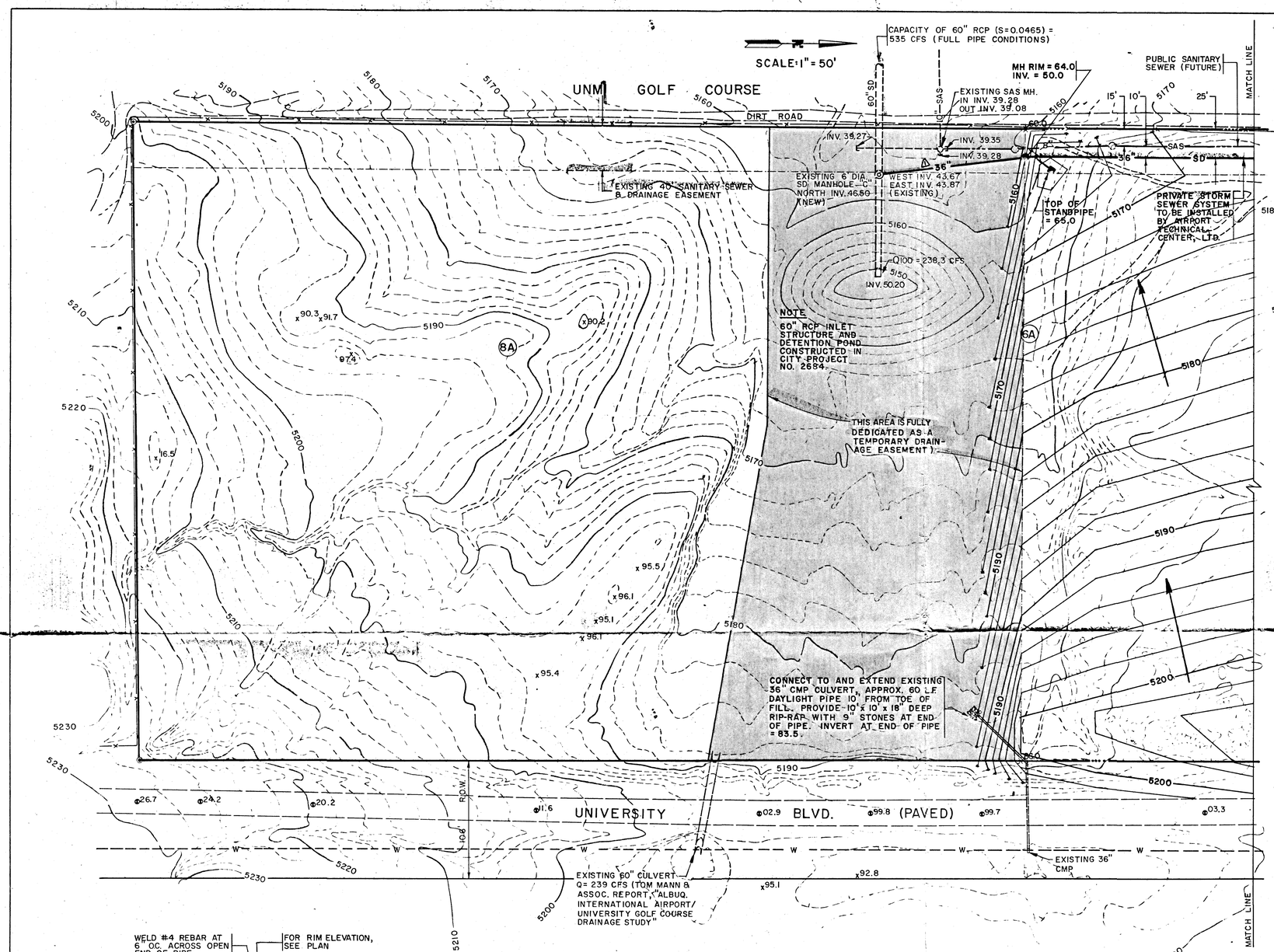

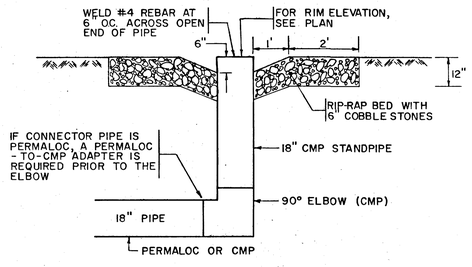

STANDPIPE DETAIL

NO SCALE

REVISION:
THIS PLAN HAS BEEN REVISED TO REFLECT NEW PLATTING OF THE SITE.

BHI JOB Nº 61673

AS BUILT INFORMATION

CONTRACTOR
WORK STAKED BY
STAKES CHECKED BY
ACCEPTANCE BY — DATE
FIELD VERIFICATION BY — DATE
DRAWINGS CORRECTED BY — DATE
MICRO-FILM INFORMATION
RECORDED BY — DATE
NO.

BENCH MARKS

CITY BENCH MARK 2-N16, STD. ACS BRASS TABLET LOCATED SOUTHWEST CORNER OF THE ALBUQUERQUE INTERNATIONAL AIRPORT IN AN OPEN PRARIE. ELEV. 5304.88

SURVEY INFORMATION

FIELD NOTES

NO.	BY	DATE

ENGINEER'S SEAL

LANE E. MILLER
NEW MEXICO
8556
REGISTERED PROFESSIONAL ENGINEER
12-9-86

NO.	DATE	REMARKS	BY
2	12/1/86	REVISED LOT LINES	JT
1	5/6/86	REVISED 60" TO 36" SD	JT

REVISIONS

DESIGN

DESIGNED BY RB — DATE 3/27/86
DRAWN BY RB, TG — DATE 3/27/86
CHECKED BY JT — DATE

RECEIVED
DEC 09 1986
HYDROLOGY SECTION

APPROVED FOR ROUGH GRADING (± 1.0')
Roger A. Green PE 12-10-86
HYDROLOGY ENGINEER — DATE

APPROVED FOR ROUGH GRADING (± 1.0')
Roger A. Green PE 5-12-86
HYDROLOGY ENGINEER — DATE

CITY OF ALBUQUERQUE

TITLE:
AIRPORT TECHNICAL CENTER
GRADING & DRAINAGE PLAN

APPROVALS	ENGINEER	DATE	APPROVALS	ENGINEER	DATE
City Engineer			Liquid Waste		
A.C.E.- Design			Traffic		
A.C.E.-Hydrology			Water		

DRAWING NO. — MAP NO. N-15 — SHEET 2 OF 2

BRUNING 44-132 62236