CITY OF ALBUQUERQUE

February 2, 2017

Mark Goodwin, PE
Mark Goodwin & Associates, PA.
PO Box 90606
Albuquerque, NM 87110

Re: Volterra Village
1652, 1656, 1660 and 1664 Domino Rd SE
Request Permanent C.O. - Accepted
Engineer's Stamp dated: 9-30-09 (M21D015C)
Certification dated: 11-15-16

Dear Mr. Goodwin,

Based on the Certification received 1/30/2017, the above referenced certification is acceptable for permanent release of Certificate of Occupancy by Hydrology.

If you have any questions, you can contact me at 924-3986 or Totten Elliott at 924-3982.

Sincerely,

Shahab Biazar, P.E.
City Engineer, Planning Dept.
Development Review Services

TE/SB
C: email Cordova, Camille C.; Miranda, Rachel; Sandoval, Darlene M.: Blocker Lois

City of Albuquerque

Planning Department

Development & Building Services Division

DRAINAGE AND TRANSPORTATION INFORMATION SHEET (REV 09/2015)

Project Title: Volterra Village **Building Permit #:** _____ City Drainage #: M21D015C

DRB#: 1004073 EPC#: _____ Work Order#: 756188

Legal Description: Lots 1,2,3,4, Block 3, Volterra Village

City Address: 1652,1656,60,64 Domino Road SE

Engineering Firm: Mark Goodwin & Associates, PA Contact: Mark Goodwin

Address: PO BOX 90606, Albuquerque, NM 87199

Phone#: 828-2200 Fax#: _____ E-mail: mark@goodwinengineers.com

Owner: JTH, LLC Contact: Scott Grady

Address: PO BOX 1443 Corrales Rd, Corrales, NM 87048

Phone#: 338-1438 Fax#: _____ E-mail: _____

Architect: _____ Contact: _____

Address: _____

Phone#: _____ Fax#: _____ E-mail: _____

Other Contact: _____ Contact: _____

Address: _____

Phone#: _____ Fax#: _____ E-mail: _____

Check all that Apply:

DEPARTMENT:

X HYDROLOGY/ DRAINAGE

____ TRAFFIC/ TRANSPORTATION

____ MS4/ EROSION & SEDIMENT CONTROL

TYPE OF SUBMITTAL:

X ENGINEER/ ARCHITECT CERTIFICATION

____ CONCEPTUAL G & D PLAN

____ GRADING PLAN

____ DRAINAGE MASTER PLAN

____ DRAINAGE REPORT

____ CLOMR/LOMR

____ TRAFFIC CIRCULATION LAYOUT (TCL)

____ TRAFFIC IMPACT STUDY (TIS)

____ EROSION & SEDIMENT CONTROL PLAN (ESC)

____ OTHER (SPECIFY) _____

CHECK TYPE OF APPROVAL/ACCEPTANCE SOUGHT:

____ BUILDING PERMIT APPROVAL

X CERTIFICATE OF OCCUPANCY

____ PRELIMINARY PLAT APPROVAL

____ SITE PLAN FOR SUB'D APPROVAL

____ SITE PLAN FOR BLDG. PERMIT APPROVAL

____ FINAL PLAT APPROVAL

____ SIA/ RELEASE OF FINANCIAL GUARANTEE

____ FOUNDATION PERMIT APPROVAL

____ GRADING PERMIT APPROVAL

____ SO-19 APPROVAL

____ PAVING PERMIT APPROVAL

____ GRADING/ PAD CERTIFICATION

____ WORK ORDER APPROVAL

____ CLOMR/LOMR

____ PRE-DESIGN MEETING

X OTHER (SPECIFY) Courtyard Drains

RECEIVED JAN 30 2017 DEVELOPMENT SECTION

IS THIS A RESUBMITTAL?: ____ Yes X No

DATE SUBMITTED: January 30, 2017 By: Mark Goodwin, PE

COA STAFF: ELECTRONIC SUBMITTAL RECEIVED: ___

CITY OF ALBUQUERQUE

October 17, 2016

Mark Goodwin, PE
Mark Goodwin & Associates, PA.
PO Box 90606
Albuquerque, NM 87110

Re: Volterra Village
1640, 1644 and 1648 Domino Rd SE
Request Permanent C.O. - Accepted
Engineer's Stamp dated: 9-30-09 (M21D015C)
Certification dated: 11-15-16

Dear Mr. Goodwin,

Based on the Certification received 11/15/2016, the above referenced certification is acceptable for permanent release of Certificate of Occupancy by Hydrology.

If you have any questions, you can contact me at 924-3986 or Totten Elliott at 924-3982.

Sincerely,

Abiel Carrillo, P.E.,
Principal Engineer, Planning Department
Development and Review Services

TE/AC
C: email Cordova, Camille C.; Miranda, Rachel; Sandoval, Darlene M.: Blocker Lois

PO Box 1293
Albuquerque
New Mexico 87103
www.cabq.gov

City of Albuquerque

Planning Department

Development & Building Services Division

DRAINAGE AND TRANSPORTATION INFORMATION SHEET (REV 09/2015)

Project Title: Volterra Village **Building Permit #:** _____ City Drainage #: M21D015C

DRB#: 1004073 EPC#: _____ Work Order#: 756188

Legal Description: Lots 5,6,7, Block 3, Volterra Village

City Address: 1640,1644, and1648 Domino Road SE

Engineering Firm: Mark Goodwin & Associates, PA Contact: Mark Goodwin

Address: PO BOX 90606, Albuquerque, NM 87199

Phone#: 828-2200 Fax#: _____ E-mail: mark@goodwinengineers.com

Owner: JTH, LLC Contact: Scott Grady

Address: PO BOX 1443 Corrales Rd, Corrales, NM 87048

Phone#: 338-1438 Fax#: _____ E-mail: _____

Architect: _____ Contact: _____

Address: _____

Phone#: _____ Fax#: _____ E-mail: _____

Other Contact: _____ Contact: _____

Address: _____

Phone#: _____ Fax#: _____ E-mail: _____

Check all that Apply:

DEPARTMENT:

X HYDROLOGY/ DRAINAGE
___ TRAFFIC/ TRANSPORTATION
___ MS4/ EROSION & SEDIMENT CONTROL

TYPE OF SUBMITTAL:

X ENGINEER/ ARCHITECT CERTIFICATION

___ CONCEPTUAL G & D PLAN
___ GRADING PLAN
___ DRAINAGE MASTER PLAN
___ DRAINAGE REPORT
___ CLOMR/LOMR

___ TRAFFIC CIRCULATION LAYOUT (TCL)
___ TRAFFIC IMPACT STUDY (TIS)
___ EROSION & SEDIMENT CONTROL PLAN (ESC)

___ OTHER (SPECIFY) _____

CHECK TYPE OF APPROVAL/ACCEPTANCE SOUGHT:

___ BUILDING PERMIT APPROVAL
X CERTIFICATE OF OCCUPANCY

___ PRELIMINARY PLAT APPROVAL
___ SITE PLAN FOR SUB'D APPROVAL
___ SITE PLAN FOR BLDG. PERMIT APPROVAL
___ FINAL PLAT APPROVAL
___ SIA/ RELEASE OF FINANCIAL GUARANTEE
___ FOUNDATION PERMIT APPROVAL
___ GRADING PERMIT APPROVAL
___ SO-19 APPROVAL
___ PAVING PERMIT APPROVAL
___ GRADING/ PAD CERTIFICATION
___ WORK ORDER APPROVAL
___ CLOMR/LOMR

___ PRE-DESIGN MEETING
X OTHER (SPECIFY) Courtyard Drains

RECEIVED NOV 15 2016 LAND DEVELOPMENT SECTION

IS THIS A RESUBMITTAL?: ___ Yes X No

DATE SUBMITTED: May 9,2016 By: Mark Goodwin, PE MG

COA STAFF: ELECTRONIC SUBMITTAL RECEIVED: ___

Kay Brashear

From: Kay Brashear
Sent: Tuesday, November 15, 2016 7:10 AM
To: 'plndrs@cabq.gov'
Cc: 'Vanessa Segura (VSegura@cabq.gov)'
Subject: Volterra Village Drainage Cert #1004073
Attachments: Drainage Info Sheet 2016-11-15.pdf; 1640-1648 Domino Dr..pdf

Hard Copies and fees will be delivered today.

Thank you,

Kay Brashear
Mark Goodwin & Associates, PA
Office Manager
PO BOX 90606
Albuquerque, NM 87119
(505) 828-2200

RECEIVED
NOV 15 2016
LAND DEVELOPMENT SECTION

CITY OF ALBUQUERQUE

June 17, 2016

Mark Goodwin, PE
Mark Goodwin & Associates, PA.
PO Box 90606
Albuquerque, NM 87110

Re: Volterra Village
1624, 1628, 1632 and 1636 Domino Rd S~~S~~E
Request Permanent C.O. - Accepted
Engineer's Stamp dated: 9-30-09 (M21D015C)
Certification dated: 5-10-16

Dear Mr. Goodwin,

Based on the Certification received 5/10/2016, the above referenced certification is acceptable for permanent release of Certificate of Occupancy by Hydrology.

If you have any questions, you can contact me at 924-3999 or Totten Elliott at 924-3982.

PO Box 1293

Sincerely,

Albuquerque

Shahab Biazar, P.E.
City Engineer, Planning Dept.
Development Review Services

New Mexico 87103

www.cabq.gov

TE/SB
C: email: Connor, Francis; Cordova, Camille C.; Miranda, Rachel; Sandoval, Darlene M.

D. Mark Goodwin & Associates, P.A.
Consulting Engineers
P.O. BOX 90606, ALBUQUERQUE,NM 87199
(505) 828-2200 FAX 797-9539

~ 2012 ACEC/NM Award Winner for Engineering Excellence ~
~ 2008 ACEC/NM Award Winner for Engineering Excellence ~

June 17, 2016

Mr. Shahab Biazar
City of Albuquerque
P.O. Box 1293
Albuquerque, NM 87103

Re: Volterra Village
1624, 1628, 1632, and 1636 Domino Rd. SE.

Dear Mr. Biazar,

On June 16, 2016, I re-inspected the courtyard drains at the referenced addresses and observed that the drains are now 16" X 16". With this response we hereby request Hydrology approval of the Permanent C.O. for these properties.

If you have any questions, please feel free to contact me directly.

Sincerely,
MARK GOODWIN & ASSOCIATES, PA

Mark Goodwin, PE
President

DMG/kb

F:\1-Projects\2011\A11064 - JTH Volterra Village\Courtyard Drain Certs\Reinspection letter to COA.docx

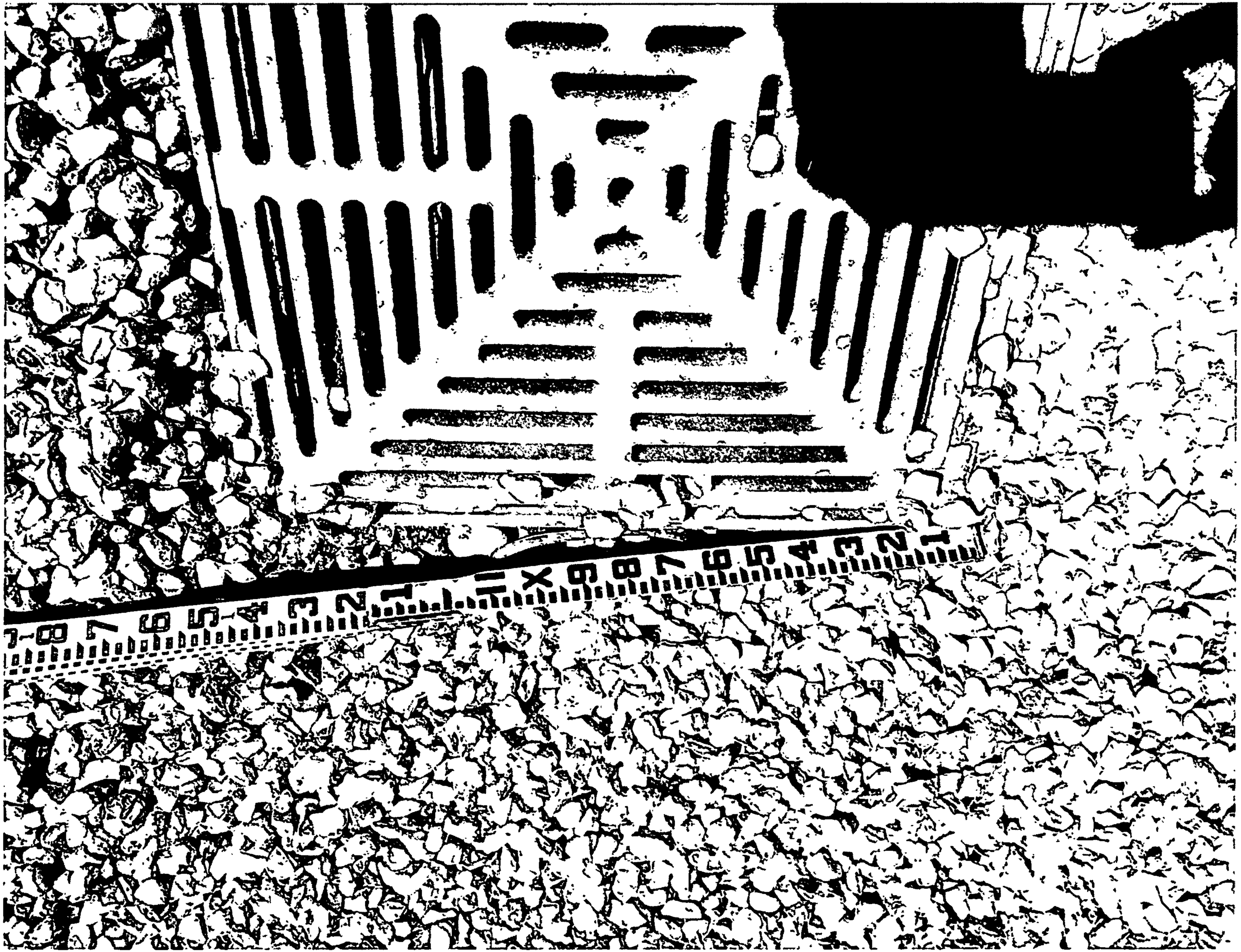

CITY OF ALBUQUERQUE

March 6, 2015

Mark Goodwin, PE
Mark Goodwin & Associates, PA.
PO Box 90606
Albuquerque, NM 87110

Re: Volterra Village
1624, 1628, 1632 and 1636 Domino Rd SE
Request Permanent C.O. – Not Accepted
Engineer's Stamp dated: 9-30-09 (M21D015C)
Certification dated: 5-10-16

Dear Mr. Goodwin,

Based on the Certification received 5/10/2016, this plan cannot be accepted for release of Certificate of Occupancy by Hydrology until the following comments are addressed.

- The attached BP approval letter dated 9-10-14 states, "The drainage report required a 15" x 15" area drain in the courtyards". Per the attached pic the grates are 12" x 12". Please provide supplemental calculations that show the 12" x 12" in each courtyard is sufficient.

If you have any questions, you can contact me at 924-3695 or Totten Elliott at 924-3999.

Sincerely,

Shahab Biazar, P.E.
Senior Engineer, Planning Dept.
Development and Building Services

TE/SB
C: email, Cordova, Camille C.; Connor, Miranda, Rachel; Sandoval, Darlene M.; Blocker, Lois

PO Box 1293
Albuquerque
New Mexico 87103
www.cabq.gov

City of Albuquerque

Planning Department

Development & Building Services Division

DRAINAGE AND TRANSPORTATION INFORMATION SHEET (REV 09/2015)

Project Title: Volterra Village Building Permit # _____ City Drainage #: M21D015C

DRB# 1004073 EPC# _____ Work Order#: 756188

Legal Description: Lots 8,9,10 & 11, Block 3, Volterra Village

City Address: 1624, 1628,1632, and 1636 Domino Road SE

Engineering Firm: Mark Goodwin & Associates, PA Contact: Mark Goodwin

Address: PO BOX 90606, Albuquerque, NM 87199

Phone# 828-2200 Fax# _____ E-mail: mark@goodwinengineers.com

Owner: JTH, LLC Contact: Scott Grady

Address: PO BOX 1443 Corrales Rd, Corrales, NM 87048

Phone# 338-1438 Fax# _____ E-mail: _____

Architect: _____ Contact: _____

Address: _____

Phone# _____ Fax# _____ E-mail: _____

Other Contact: Raylee Homes Contact: Bob Feeney

Address: PO BOX 1443 Corrales Rd, Corrales, NM 87048

Phone# 338-1438 Fax# _____ E-mail: bfeeney@rayleehomes.com

Check all that Apply

DEPARTMENT:

X HYDROLOGY/ DRAINAGE
____ TRAFFIC/ TRANSPORTATION
____ MS4/ EROSION & SEDIMENT CONTROL

TYPE OF SUBMITTAL:

X ENGINEER/ ARCHITECT CERTIFICATION

____ CONCEPTUAL G & D PLAN
____ GRADING PLAN
____ DRAINAGE MASTER PLAN
____ DRAINAGE REPORT
____ CLOMR/LOMR

____ TRAFFIC CIRCULATION LAYOUT (TCL)
____ TRAFFIC IMPACT STUDY (TIS)
____ EROSION & SEDIMENT CONTROL PLAN (ESC)

____ OTHER (SPECIFY) _____

IS THIS A RESUBMITTAL? ____ Yes X No

RECEIVED
MAY 10 2016
LAND DEVELOPMENT SECTION

CHECK TYPE OF APPROVAL/ACCEPTANCE SOUGHT:

____ BUILDING PERMIT APPROVAL
X CERTIFICATE OF OCCUPANCY

____ PRELIMINARY PLAT APPROVAL
____ SITE PLAN FOR SUB'D APPROVAL
____ SITE PLAN FOR BLDG PERMIT APPROVAL
____ FINAL PLAT APPROVAL
____ SIA/ RELEASE OF FINANCIAL GUARANTEE
____ FOUNDATION PERMIT APPROVAL
____ GRADING PERMIT APPROVAL
____ SO-19 APPROVAL
____ PAVING PERMIT APPROVAL
____ GRADING/ PAD CERTIFICATION
____ WORK ORDER APPROVAL
____ CLOMR/LOMR

____ PRE-DESIGN MEETING
X OTHER (SPECIFY) Courtyard Drains

DATE SUBMITTED: May 9,2016 By: Mark Goodwin, PE MG

COA STAFF ELECTRONIC SUBMITTAL RECEIVED ___

CITY OF ALBUQUERQUE

February 4, 2015

Mark Goodwin, PE
Mark Goodwin & Associates, PA.
PO Box 90606
Albuquerque, NM 87110

Re: Volterra Village
Request for Building Permit Approval
Master Paving Plan dated 1-8-13
Certification dated: 1-27-15

Dear Mr. Goodwin,

Based on the Certification received 1/28/2015, the site is acceptable for release of Building Permit acceptance by Hydrology.

For future submittals, it is common practice to submit the approved Grading and Drainage Plan with as-built information on this plan.

If you have any questions, you can contact me at 924-3695 or Rudy Rael at 924-3977.

PO Box 1293

Albuquerque

New Mexico 87103

www.cabq.gov

Sincerely,

Curtis Cherne, P.E.
Principal Engineer, Planning Dept.
Development and Review Services

C: RR/CC
email

DRAINAGE AND TRANSPORTATION INFORMATION SHEET
(Rev. 12/05)

PROJECT TITLE: Volterra Village ZAP/DRG. FILE M-22 M21D015C
DRB#: 1004073 EPC#: WORK ORDER#: 756188

LEGAL DESCRIPTION:
CITY ADDRESS: Juan Tabo and Silver Charm, SE

ENGINEERING FIRM: Mark Goodwin & Associates, PA
ADDRESS: PO Box 90606
CITY, STATE: Albuquerque, NM
CONTACT: Mark Goodwin
PHONE: 828-2200
ZIP CODE: 87199

OWNER: JTH, LLC
ADDRESS: PO BOX 1443
CITY, STATE: Corrales, NM
CONTACT: Scott Grady
PHONE: 338-1438
ZIP CODE: 87048

ARCHITECT: N/A
ADDRESS:
CITY, STATE:
CONTACT:
PHONE:
ZIP CODE:

SURVEYOR: ALS, INC.
ADDRESS: PO Box 30701
CITY, STATE: Albuquerque, NM
CONTACT: Tim Aldrich
PHONE: 328-3988
ZIP CODE: 87190

CONTRACTOR: Salls Brothers Construction
ADDRESS: 7301 Reading Ave. SE
CITY, STATE: Albuquerque, NM
CONTACT: Fred Salls
PHONE: 873-8780
ZIP CODE: 87105

TYPE OF SUBMITTAL:
_____ DRAINAGE REPORT
_____ DRAINAGE PLAN 1st SUBMITTAL
_____ DRAINAGE PLAN RESUBMITTAL
_____ CONCEPTUAL G & D PLAN
_____ GRADING PLAN (Eng. stamp 3-7-14)
_____ EROSION CONTROL PLAN
X_____ ENGINEER'S CERT (HYDROLOGY)
_____ CLOMR/LOMR
_____ TRAFFIC CIRCULATION LAYOUT
_____ ENGINEER/ARCHITECT CERT (TCL)
_____ ENGINEER/ARCHITECT (DRB SITE PLAN)
_____ OTHER (Percolation Testing

CHECK TYPE OF APPROVAL SOUGHT:
_____ SIA/FINANCIAL GUARANTEE RELEASE
_____ PRELIMINARY PLAT APPROVAL
_____ S. DEV. PLAN FOR SUB'D APPROVAL
_____ S. DEV. FOR BLDG. PERMIT APPROVAL
_____ SECTOR PLAN APPROVAL
_____ FINAL PLAT APPROVAL
_____ FOUNDATION PERMIT APPROVAL
X_____ BUILDING PERMIT APPROVAL
_____ CERTIFICATE OF OCCUPANCY (PERM)
_____ CERTIFICATE OF OCCUPANCY (TEMP)
_____ GRADING PERMIT APPROVAL
_____ PAVING PERMIT APPROVAL
_____ WORK ORDER APPROVAL
_____ OTHER (Construction Plans Approval)

WAS A PRE-DESIGN CONFERENCE ATTENDED:
_____ YES
X_____ NO
_____ COPY PROVIDED

RECEIVED
JAN 28 2015
LAND DEVELOPMENT SECTION

SUBMITTED BY: Mark Goodwin, PE DATE: 1/27/2015

Requests for approvals of Site Development Plans and/or Subdivision Plats shall be accompanied by a drainage submittal. The particular nature, location and scope to the proposed development define the degree of drainage detail. One or more of the following levels of submittal may be required based on the following:

1. **Conceptual Grading and Drainage Plan**: Required for approval of Site Development Plans greater than five (5) acres and Sector Plans.

2. **Drainage Plans**: Required for building permits, grading permits, paving permits and site plans less than five (5) acres.

3. **Drainage Report**: Required for subdivision containing more than ten (10) lots or constituting five (5) acres or more.

Cherne, Curtis

From: Cherne, Curtis
Sent: Thursday, October 02, 2014 4:37 PM
To: 'Mark Goodwin'
Cc: Rael, Jane E.; Biazar, Shahab
Subject: RE: Volterra Village

Mark,
This is acceptable to Hydrology. You could also build Temporary Asphalt Curb Type C Residential COA STD DWG 2415B.

Submit a certification when it is complete for Building Permit approval.

Curtis

-----Original Message-----
From: Mark Goodwin [mailto:Mark@goodwinengineers.com]
Sent: Tuesday, September 30, 2014 1:27 PM
To: Cherne, Curtis
Cc: Scott Grady (rvsg7@rayleehomes.com)
Subject: Volterra Village

Curtis - attached is the detail to prevent erosion behind the curb as Scott discussed with you - let me know if you need something else.

Thanks

Mark Goodwin, P.E.
President
MARK GOODWIN & ASSOCIATES, PA
(505) 828-2200-office
(505) 797-9539-fax
mark@goodwinengineers.com

D. Mark Goodwin & Associates, P.A.
Consulting Engineers
P.O. BOX 90606, ALBUQUERQUE,NM 87199
(505) 828-2200 FAX 797-9539

~ 2012 ACEC/NM Award Winner for Engineering Excellence ~
~ 2008 ACEC/NM Award Winner for Engineering Excellence ~

September 30, 2014

Mr. Curtis Cherne, P.E.
City of Albuquerque
Hydrology Department
PO BOX 1293
Albuquerque, NM 87103

Re: Volterra Village

Dear Mr. Cherne:

The driveways shown on Gulfstream Drive, Borrega Drive, and Volpani Drive would get damaged during home construction so they were not constructed. Due to erosion concerns behind the valley gutter/gutter pans, we are proposing to have the Work Order Contractor construct a temporary barrier per the attached detail or where possible an asphalt curb.

We request your consideration of this solution and a release of all remaining Building Permits as they are applied for.

Please contact me if you have any questions or concerns.

Sincerely,
MARK GOODWIN & ASSOCIATES, PA

Mark Goodwin, P.E.
President

DMG/kb

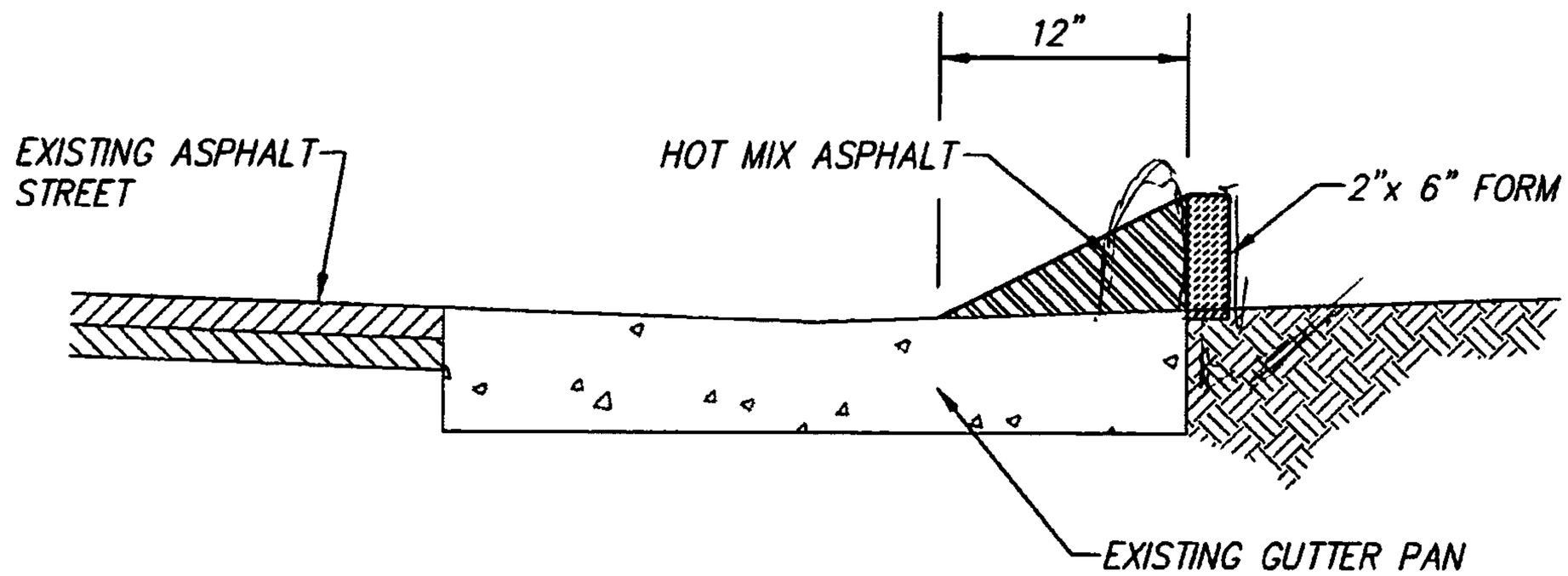

TEMPORARY EROSION PROTECTION BARRIER

SCALE: 1"=1'

D. MARK GOODWIN
NEW MEXICO
8948
LICENSED PROFESSIONAL ENGINEER
9/30/14

VOLTERRA VILLAGE

TEMPORARY EROSION PROTECTION BARRIER

dmg
MARK GOODWIN & ASSOCIATES, P.A.
CONSULTING ENGINEERS
P.O. BOX 90606
ALBUQUERQUE, NEW MEXICO 87199
(505)828-2200, FAX (505)797-9539

D. Mark Goodwin & Associates, P.A.
Consulting Engineers
P.O. BOX 90606, ALBUQUERQUE,NM 87199
(505) 828-2200 FAX 797-9539

~ 2012 ACEC/NM Award Winner for Engineering Excellence ~
~ 2008 ACEC/NM Award Winner for Engineering Excellence ~

January 27, 2015

Mr. Curtis Cherne
City of Albuquerque, Hydrology
PO Box 1293
Albuquerque, NM 87103

Re: Volterra Village

Dear Mr. Cherne:

Attached, please find an As-Built/Certification Drawing for the drivepads that were recently constructed per the City's demand. We believe this should suffice in removing any holds on Building Permits.

Sincerely,
MARK GOODWIN & ASSOCIATES, PA

Mark Goodwin, PE
President

DMG/kb

RECEIVED
JAN 28 2015
LAND DEVELOPMENT SECTION

F:\1-Projects\2011\A11064 - JTH Volterra Village\Drivepad Cert Letter.docx

Kay Brashear

From: Kay Brashear
Sent: Tuesday, January 27, 2015 3:10 PM
To: Curtis Cherne (ccherne@cabq.gov)
Cc: 'Ortiz, Monica'; Diane Hoelzer
Subject: JTH Volterra Village #756188
Attachments: Drivepad Cert Plan.pdf; Drivepad Cert Letter and Drainage Info Sheet.pdf

Curtis,

Attached, please see the Drivepad Certification and corresponding documentation for the above referenced project.
We will deliver a hard copy to your office tomorrow.
Please acknowledge receipt of this email.

Thank you,

Kay Brashear
Mark Goodwin & Associates, PA
Office Manager
PO BOX 90606
Albuquerque, NM 87119
(505) 828-2200

RECEIVED
JAN 28 2015
LAND DEVELOPMENT SECTION

CITY OF ALBUQUERQUE

September 19, 2014

Diane Hoelzer, P.E.
Mark Goodwin & Associates, PA
P.O. Box 90606
Albuquerque, NM 87199

Pad Cert

Re: Volterra Village
Grading and Drainage Plan Certification for Building Permit Approval
Engineer Stamp Date 9-30-09
Engineer Certification dated 8-18-14

Dear Ms. Hoelzer,

Based upon the information provided in your submittal received 8-19-14, the above referenced plan is approved for residential building permits in the area west of Domino Dr., south of Cicada Rd and north of Silver Charm Rd.

1. The townhomes that have drains in the backyard with a private storm drain in the backyard will have to have building permits submitted from downhill to uphill. An engineer's certification of the backyard and grate grades and the private storm drain is required for release of Certificate of Occupancy.
2. The drainage report required a 15" x 15" area drain in the courtyards and used the WATTS FD-450-F as an example. The private storm drain it to be 12" diameter. These details are required in the building permits.

Residential building permits will not be approved in the remaining area of the site until the following comment is addressed:

1. The driveways as shown on the construction plans were not built on the downstream sections of Gulfstream Dr., Borrego Dr, and Volponi Dr. The driveways were designed to keep the storm water on a hardened surface. Without the driveways, stormwater will erode the dirt areas adjacent to the valley gutter.

A separate grading and drainage plan should be submitted for the office/retail sites for Building Permit approval.

Please inform your client that there is erosion (2 to 4' deep cuts) occurring on Tract 1-C-2 that was graded as part of this development and Juan tabo Hills Unit 3A and he/she should take steps to prevent further erosion.

If you have any questions, you can contact me at 924-3986.

Sincerely,

Curtis Cherne, P.E.
Principal Engineer, Hydrology
Planning Dept.

PO Box 1293
Albuquerque
New Mexico 87103
www.cabq.gov

CITY·OF ALBUQUERQUE

January 16, 2013

Diane Hoelzer, P.E.
Mark Goodwin & Associates, PA
P.O. Box 90606
Albuquerque, NM 87199

Re: Volterra Village, Grading and Drainage Plan & Supplemental Drainage Calculations (M21/D015C) With Engineer Stamp Dates 10/31/2012 & 1/7/2013

Dear Ms. Hoelzer,

Based upon the information provided in your submittal received 1-7-13, the grading and Drainage Plan sheet 7.1 of 37 with Engineer's Stamp Date 10/31/2012 (previously approved with Engineer's Stamp Date 9/30/2009) and supplemental drainage calculations with Engineer's Stamp Date 1/7/2013 is approved for Grading Permit and work order.

This project requires a National Pollutant Discharge Elimination System (NPDES) permit for storm water discharge for disturbing one acre or more and a Topsoil Disturbance Permit for disturbing ¾ of an acre or more. Please attach a copy of this approved plan to the construction sets prior to sign-off by Hydrology. Prior to release of financial guarantee grading certification will be required, and all the improvements according to the infrastructure list must be constructed and accepted by the City of Albuquerque.

If you have any questions, you can contact me at 924-3695.

Sincerely,

Shahab Biazar, P.E.
Senior Engineer, Planning Dept.
Development and Building Services

C: e-mail

PO Box 1293
Albuquerque
NM 87103
www.cabq.gov

DRAINAGE AND TRANSPORTATION INFORMATION SHEET
(Rev. 12/05)

M-21 / D015C

PROJECT TITLE: Volterra Village ZONE MAP/DRG. FILE # ~~M21 & M22~~
DRB#: 1004073 EPC#: 08EPC-40104 & EPC-40101 WORK ORDER#: 756188

LEGAL DESCRIPTION: Tract 4-A, Juan Tabo Hills, Unit 1
CITY ADDRESS:

ENGINEERING FIRM: Mark Goodwin & Associates, PA CONTACT: Diane Hoelzer, PE
ADDRESS: P.O. Box 90606 PHONE: 828-2200
CITY, STATE: Albuquerque, NM ZIP CODE: 87199

OWNER: JTH, LLC CONTACT: Scott Grady
ADDRESS: P.O. Box 1443 PHONE: 892-5533
CITY, STATE: Corrales, NM ZIP CODE: 87048

ARCHITECT: Dekker/Perich/Sabatini CONTACT: Sarah Zahm
ADDRESS: 7601 Jefferson NE, Suite 100 PHONE: 761-9700
CITY, STATE: Albuquerque, NM ZIP CODE: 87109

SURVEYOR: Cartesian Surveys CONTACT: Will Plotner, Jr.
ADDRESS: 2104 Southern Blvd. SE PHONE: 896-3050
CITY, STATE: Rio Rancho, NM ZIP CODE: 87124

CONTRACTOR: CONTACT:
ADDRESS: PHONE:
CITY, STATE: ZIP CODE:

TYPE OF SUBMITTAL:
___ DRAINAGE REPORT
___ DRAINAGE PLAN 1st SUBMITTAL
___ DRAINAGE PLAN RESUBMITTAL
___ CONCEPTUAL G & D PLAN
X GRADING PLAN (revised sheet)
___ EROSION CONTROL PLAN
___ ENGINEER'S CERT (HYDROLOGY)
___ CLOMR/LOMR
___ TRAFFIC CIRCULATION LAYOUT
___ ENGINEER/ARCHITECT CERT (TCL)
___ ENGINEER/ARCHITECT (DRB SITE PLAN)
___ OTHER

CHECK TYPE OF APPROVAL SOUGHT:
___ SIA/FINANCIAL GUARANTEE RELEASE
___ PRELIMINARY PLAT APPROVAL
___ S. DEV. PLAN FOR SUB'D APPROVAL
___ S. DEV. FOR BLDG. PERMIT APPROVAL
___ SECTOR PLAN APPROVAL
___ FINAL PLAT APPROVAL
___ FOUNDATION PERMIT APPROVAL
___ BUILDING PERMIT APPROVAL
___ CERTIFICATE OF OCCUPANCY (PERM)
___ CERTIFICATE OF OCCUPANCY (TEMP)
___ GRADING PERMIT APPROVAL
___ PAVING PERMIT APPROVAL
X WORK ORDER APPROVAL
___ OTHER (SPECIFY)

RECEIVED
JAN - 7 2013

WAS A PRE-DESIGN CONFERENCE ATTENDED:
___ YES
X NO
___ COPY PROVIDED

SUBMITTED BY: Diane Hoelzer, PE DATE: January 4, 2013

Requests for approvals of Site Development Plans and/or Subdivision Plats shall be accompanied by a drainage submittal. The particular nature, location and scope to the proposed development define the degree of drainage detail. One or more of the following levels of submittal may be required based on the following:

1. **Conceptual Grading and Drainage Plan**: Required for approval of Site Development Plans greater than five (5) acres and Sector Plans.

2. **Drainage Plans**: Required for building permits, grading permits, paving permits and site plans less than five (5) acres.

3. **Drainage Report**: Required for subdivision containing more than ten (10) lots or constituting five (5) acres or more.

D. Mark Goodwin & Associates, P.A.
Consulting Engineers
P.O. BOX 90606, ALBUQUERQUE,NM 87199
(505) 828-2200 FAX 797-9539

January 7, 2013

Mr. Shahab Biazar, PE
Hydrology, Planning Dept.
Development and Building Services
City of Albuquerque
PO Box 1293
Albuquerque, NM 87103

Re: Volterra Village Grading Plan
Engineers Revised Stamp Date 10-31-12 (M-21/22)

Dear Mr. Biazar;

One sheet of the originally approved grading plan was revised to reflect the improvements in City Open Space Tract 1-C-2 as approved at DRB with Juan Tabo Hills Unit 3A and 3B preliminary plats.

Please call me if you have any questions.

Sincerely,

MARK GOODWIN & ASSOCIATES, P.A.

Diane Hoelzer, PE
Senior Engineer

DLH/dlh
f:\\7083 \Volterra Village\ hydro_ltr.docx

RECEIVED
JAN - 7 2013

11.26.12 Volterra Village (Revised Street Calcs.)

Borrego @ Inlets Q = 28.32 cfs S = 2.29% 26' FF
Revised Q = 28.83 cfs

6.11

Volponi @ Inlets Q = 21.31 cfs S = 2.19% 26' FF
Revised Q = 22.08 cfs

6

Domino @ Inlets Q = 8.18 cfs S = 2.0% 26' FF
Revised Q = 8.98 cfs

5.76

Forego @ end J.T.H. Blvd. Q = 9.83 cfs S = 3.0% 24' FF
Revised Q = 10.67 cfs

7

Borrego $\frac{140 LF (36)}{43560} (4.424) = .51$ cfs

Volponi $\frac{210 (36)}{43560} (4.424) = .72$ cfs

Domino $\frac{220 (36)}{43560} (4.424) = .80$ cfs

Bull Lea $\frac{230 (36)}{43560} (4.424) = .84$ cfs.

11/7/13

TOPS FORM 7521 Made in U.S.A.

RECEIVED JAN - 7 2013

STREET CAPACITY

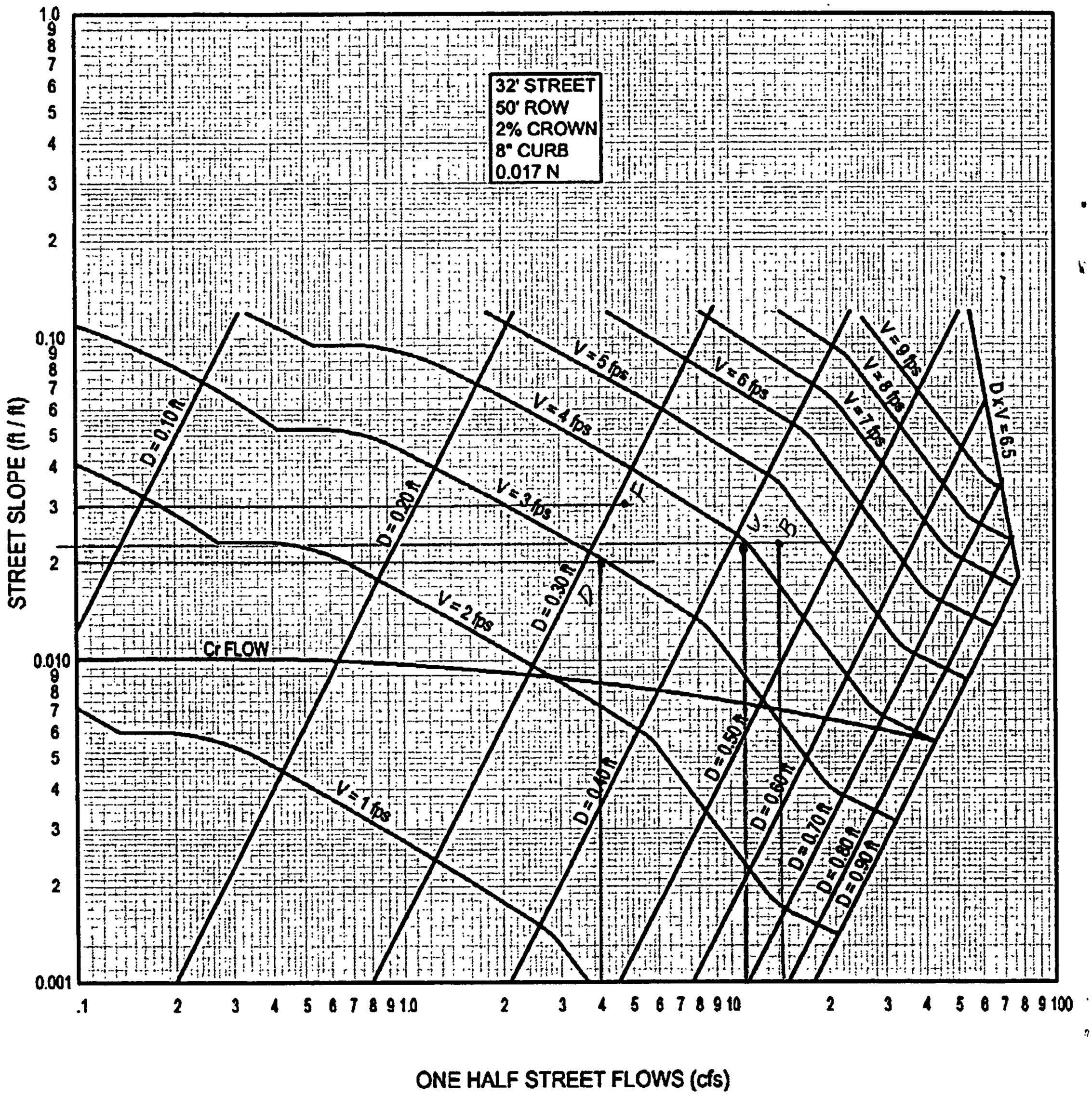

PLATE 22.3 D-1

RECEIVED
JAN - 7 2013

CITY OF ALBUQUERQUE

October 21, 2009

Gregory J. Krenik, P.E.
Mark Goodwin & Associates, PA
P.O. Box 90606
Albuquerque, NM 87199

Re: Volterra Village Drainage Report and Grading Plan, Engineer's Stamp dated 9-30-09 (M21/D015C)

Dear Mr. Krenik,

Based upon the information provided in your submittal received 10-1-09 and 10-20-09, the above referenced report and plan are approved for Final Plat action by the DRB and for Grading Permit.

PO Box 1293

Albuquerque

NM 87103

www.cabq.gov

Sincerely,

Curtis A. Cherne, P.E.
Senior Engineer, Planning Dept.
Development and Building Services

C: file
Brad Bingham

LETTER OF TRANSMITTAL

dmg
D. Mark Goodwin & Associates, P.A.
Consulting Engineers
P.O. BOX 90606, ALBUQUERQUE, NM 87199
(505) 828-2200 FAX 797-9539

DATE 10-19-09 JOB NO.

ATTENTION

RE: VALTIERRA VILLAGE

TO CURTIS CHERNE
Hydrology - one stop

WE ARE SENDING YOU ☒ Attached ☐ Under separate cover via _____ the following items:

☐ Shop drawings ☒ Prints ☐ Plans ☐ Samples ☐ Specifications
☐ Copy of letter ☐ Change order ☐ _____

COPIES	DATE	NO.	DESCRIPTION
1			Detail sheet

THESE ARE TRANSMITTED as checked below:

☐ For approval ☐ Approved as submitted ☐ Resubmit _____ copies for approval
☐ For your use ☐ Approved as noted ☐ Submit _____ copies for distribution
☒ As requested ☐ Returned for corrections ☐ Return _____ corrected prints
☐ For review and comment ☐ _____
☐ FOR BIDS DUE _____ ☐ PRINTS RETURNED AFTER LOAN TO US

REMARKS
CURTIS - HERE'S THE sheet you Requested.

COPY TO _____

SIGNED: GREGORY J. KRENIK

If enclosures are not as noted, kindly notify us at once.

DRAINAGE AND TRANSPORTATION INFORMATION SHEET
(Rev. 12/05)

M21/D015C

PROJECT TITLE: Volterra Village ZONE MAP/DRG. FILE #: ~~M21 & M22~~
DRB#: 1004073 EPC#: 08EPC-40104 & EPC-40101 WORK ORDER#:

LEGAL DESCRIPTION: Tract 4-A, Juan Tabo Hills, Unit 1
CITY ADDRESS:

ENGINEERING FIRM: Mark Goodwin & Associates, PA CONTACT: Gregory J. Krenik
ADDRESS: P.O. Box 90606 PHONE: 828-2200
CITY, STATE: Albuquerque, NM ZIP CODE: 87199

OWNER: JTH, LLC CONTACT: Scott Grady
ADDRESS: P.O. Box 1443 PHONE: 892-5533
CITY, STATE: Corrales, NM ZIP CODE: 87048

ARCHITECT: Dekker/Perich/Sabatini CONTACT: Sarah Zahm
ADDRESS: 7601 Jefferson NE, Suite 100 PHONE: 761-9700
CITY, STATE: Albuquerque, NM ZIP CODE: 87109

SURVEYOR: Cartesian Surveys CONTACT: Will Plotner, Jr.
ADDRESS: 2104 Southern Blvd. SE PHONE: 896-3050
CITY, STATE: Rio Rancho, NM ZIP CODE: 87124

CONTRACTOR: CONTACT:
ADDRESS: PHONE:
CITY, STATE: ZIP CODE:

TYPE OF SUBMITTAL:
X DRAINAGE REPORT
__ DRAINAGE PLAN 1st SUBMITTAL
X DRAINAGE PLAN RESUBMITTAL
__ CONCEPTUAL G & D PLAN
X GRADING PLAN
__ EROSION CONTROL PLAN
__ ENGINEER'S CERT (HYDROLOGY)
__ CLOMR/LOMR
__ TRAFFIC CIRCULATION LAYOUT
__ ENGINEER/ARCHITECT CERT (TCL)
__ ENGINEER/ARCHITECT (DRB SITE PLAN)
__ OTHER

CHECK TYPE OF APPROVAL SOUGHT:
__ SIA/FINANCIAL GUARANTEE RELEASE
__ PRELIMINARY PLAT APPROVAL
__ S. DEV. PLAN FOR SUB'D APPROVAL
__ S. DEV. FOR BLDG. PERMIT APPROVAL
__ SECTOR PLAN APPROVAL
X FINAL PLAT APPROVAL
__ FOUNDATION PERMIT APPROVAL
__ BUILDING PERMIT APPROVAL
__ CERTIFICATE OF OCCUPANCY (PERM)
__ CERTIFICATE OF OCCUPANCY (TEMP)
X GRADING PERMIT APPROVAL
__ PAVING PERMIT APPROVAL
__ WORK ORDER APPROVAL
__ OTHER (SPECIFY)

WAS A PRE-DESIGN CONFERENCE ATTENDED:
__ YES
X NO
__ COPY PROVIDED

SUBMITTED BY: Gregory J. Krenik, PE DATE: 9-30

RECEIVED
SEP 30 2009
HYDROLOGY SECTION

RECEIVED
OCT 1 2009
HYDROLOGY SECTION

Requests for approvals of Site Development Plans and/or Subdivision Plats shall be accompanied by a drainage submittal. The particular nature, location and scope to the proposed development define the degree of drainage detail. One or more of the following levels of submittal may be required based on the following:

1. **Conceptual Grading and Drainage Plan**: Required for approval of Site Development Plans greater than five (5) acres and Sector Plans.

2. **Drainage Plans**: Required for building permits, grading permits, paving permits and site plans less than five (5) acres.

3. **Drainage Report**: Required for subdivision containing more than ten (10) lots or constituting five (5) acres or more.

D. Mark Goodwin & Associates, P.A.
Consulting Engineers
P.O. BOX 90606, ALBUQUERQUE,NM 87199
(505) 828-2200 FAX 797-9539

~ 2008 ACEC/NM Award Winner for Engineering Excellence, Small Firm ~

September 30, 2009

Mr. Curtis Cherne
Hydrology Department
City of Albuquerque
P.O. Box 1293
Albuquerque, NM 87103

Re: Volterra Village Drainage Report and Grading Plan (M21 / DO15C)

Dear Mr. Cherne:

This letter is an itemized response to your letter from April 7, 2009 and part of the re-submittal.

1. *The slope between Juan Tabo Blvd. and Block 1, Lots 1-6 has been adjusted to show a maximum of 3:1.* barely ~~[illegible]~~ Ons
2. *The grate elevation on sheet 2 keyed note 12 has been changed to 68.67.*
3. *The area in question has a slope too steep for a pond unless retaining walls are used and the owner does not want the hand rails that would be required, so we are leaving this area as is.*
4. *We have added a storm drain manhole to avoid the tight angle. This seemed to be okay at the first DRC Review.*
5. *The contour lines on Lots 19+20, Block 7 have been revised.*
6. *See attached email*
7. *A 10' valley gutter with cut-off walls has been added along with a wire enclosed rip rap pad.*
8. *The Monachos profile has been revised and the rundowns removed from the plans.*

Please call or email with any questions you may have.

Sincerely,

Mark Goodwin & Associates, P.A.

Gregory J. Krenik,PE
Project Engineer

GJK/la

Attachment

RECEIVED
OCT 1 2009
HYDROLOGY SECTION

F:\1-Projects\2007\A07083 - Volterra Village Square\G&D Ltr to Cherne.doc

Gregory Krenik

From: *Cherne, Curtis [CCherne@cabq.gov]*
Sent: *Tuesday, August 04, 2009 2:43 PM*
To: *Gregory Krenik*
Subject: *RE: Volterra M21/D015C*

Greg,
In general, this comment may help prevent runoff from going up driveways and ramps then washing out the back of curb. I vaguely remember discussing this with you and there is little/no gravel in this area and there is no curve in the street. Therefore, this comment need not be addressed. I will put a copy of this e-mail in the file.

Curtis

From: Gregory Krenik [mailto:Greg@goodwinengineers.com]
Sent: Tuesday, August 04, 2009 10:41 AM
To: Cherne, Curtis
Subject: Volterra M21/D015C

Curtis,
Just a question on your approval letter for this project. I was going through the comments I need to do before Final Plat and came across one I have a question on....I guess it would be #6...the one about the SD in Borrego. On all streets in the subdivision, the EGL is higher than the curb and the velocity is higher than 3 f/s....I don't understand what makes this street different than the others? Could you clarify the comment?
Thanks, Greg

[redacted]

MARK GOODWIN & ASSOCIATES
CONSULTING ENGINEERS

DRAINAGE REPORT
for
VOLTERRA VILLAGE

Prepared by

Mark Goodwin & Associates, PA
P.O. Box 90606
Albuquerque, NM 87199
(505) 828-2200

Prepared for

JTH, LLC
P.O. Box 1443
Corrales, NM 87048
(505) 892-5533

GREGORY JAMES KRUEGER
NEW MEXICO
11929
11-12-08
REGISTERED PROFESSIONAL ENGINEER

4-7-09
9-30-09

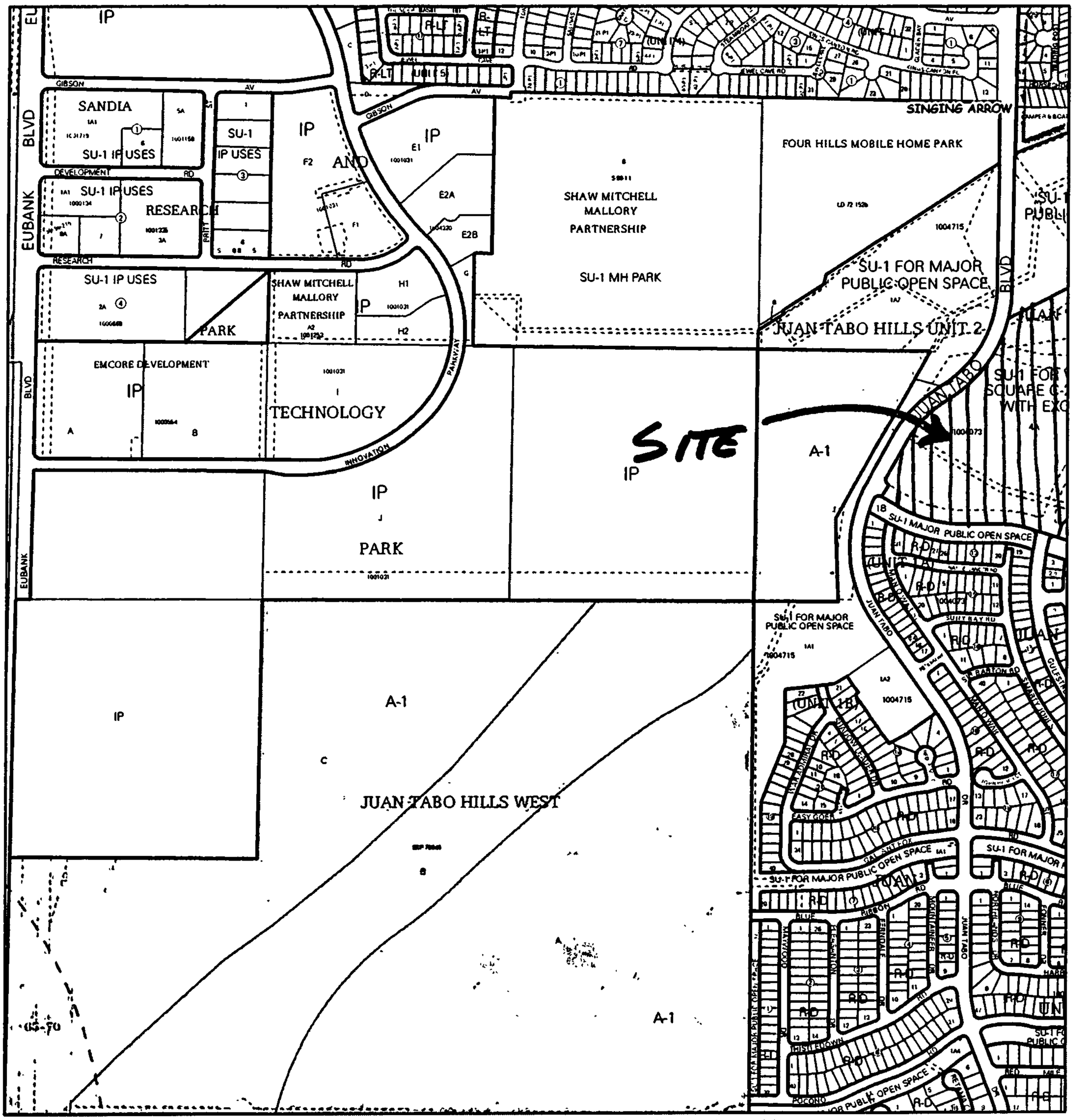

For more current information and more details visit: http://www.cabq.gov/gis

Map amended through: 6/13/2008

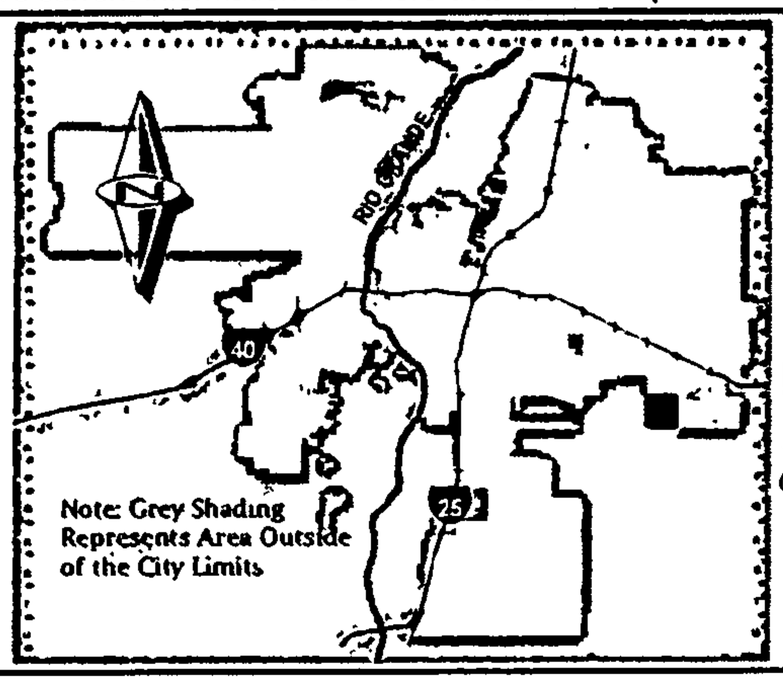

Zone Atlas Page:

M-21-Z

Selected Symbols

- SECTOR PLANS
- Design Overlay Zones
- City Historic Zones
- H-1 Buffer Zone
- Petroglyph Mon.
- Escarpment
- 2 Mile Airport Zone
- Airport Noise Contours
- Wall Overlay Zone

0 750 1,500 Feet

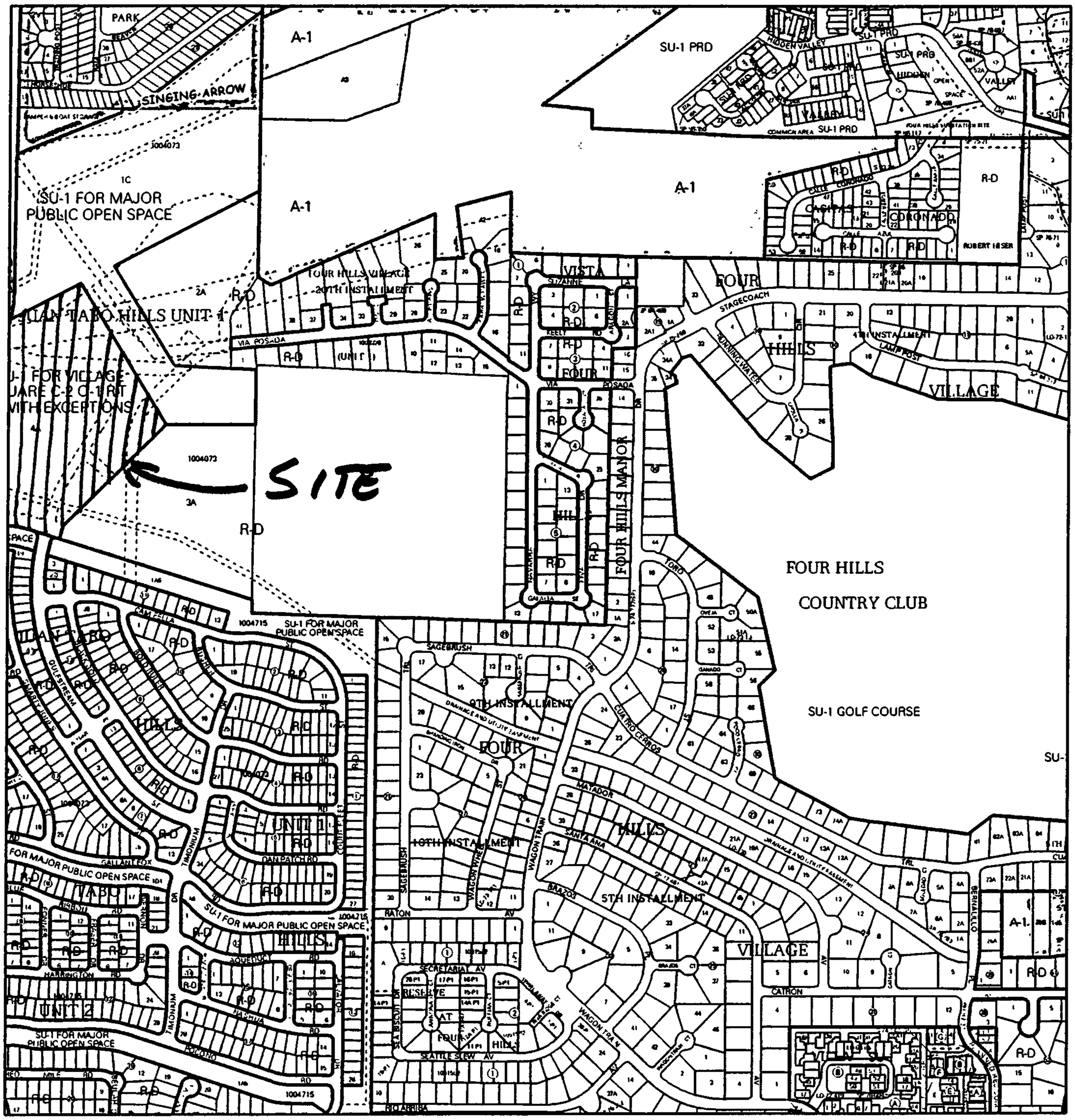

For more current information and more details visit: http://www.cabq.gov/gis

Albuquerque Geographic Information System

Map amended through: 6/13/2008

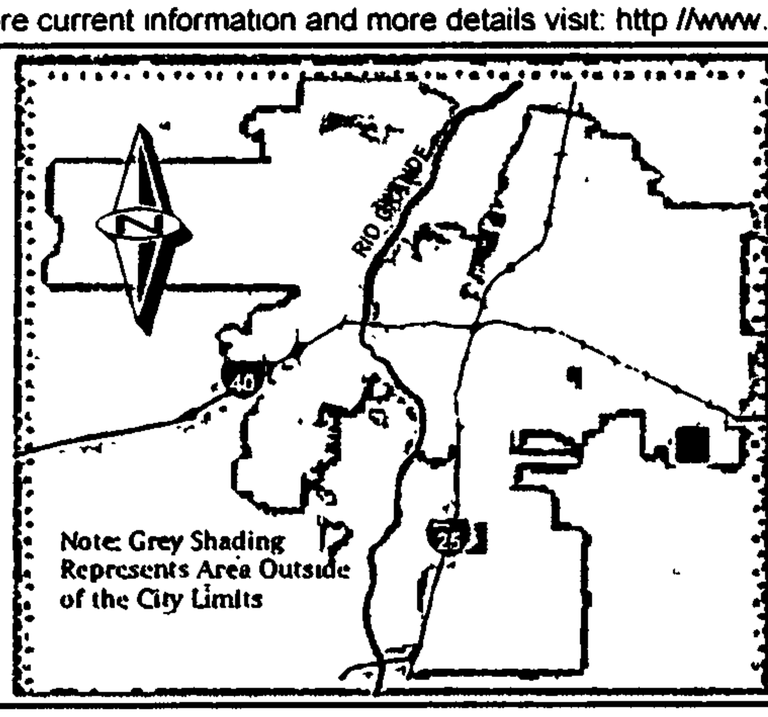

Zone Atlas Page:

M-22-Z

Selected Symbols

- SECTOR PLANS
- Design Overlay Zones
- City Historic Zones
- H-1 Buffer Zone
- Petroglyph Mon.
- Escarpment
- 2 Mile Airport Zone
- Airport Noise Contours
- Wall Overlay Zone

0 750 1,500 Feet

dmg D. Mark Goodwin & Associates, P.A.
Consulting Engineers
P.O. BOX 90606, ALBUQUERQUE,NM 87199
(505) 828-2200 FAX 797-9539

PROJECT VOLTERRA
SUBJECT DRAINAGE CALCS
BY GJK DATE 11-10-08
CHECKED _____ DATE _____
SHEET 1 OF ____

REVISED 3-3-09

- PROJECT WAS PART OF THE G+D REPORT FOR JUAN TABO HILLS PREPARED BY MARK GOODWIN & ASSOCIATES.
- IN THAT REPORT THE SITE WAS COMMERCIAL. WITH THIS REPORT THE SITE WILL BE BOTH RESIDENTIAL (HIGH DENSITY) AND COMMERCIAL.

PER THE JTH REPORT
COMMERCIAL AREA = 27.7621 AC
80% D
20% B
Q = 82.97 CFS

- THIS PROJECT CONSISTS OF 25.6600 AC

158 RESIDENTIAL LOTS = 20.8766 AC
4 COMMERCIAL BLDGS = 2.6533 AC
PARKING LOT & FUTURE FIRE STATION = 2.1301 AC
25.6600

- RESIDENTIAL

30 TYPE A UNITS - 1707 SF "D" = 1.1756 AC
32 TYPE A1 UNITS - 1898 SF "D" = 1.3943 AC
32 TYPE B UNITS - 1965 SF "D" = 1.4435 AC
24 TYPE B1 UNITS - 2160 SF "D" = 1.1901 AC
22 TYPE C UNITS - 1567 SF "D" = 0.7914 AC
12 TYPE C1 UNITS - 1682 SF "D" = 0.4634 AC
6 TYPE D UNITS - 2313 SF "D" = 0.3186 AC
6.7769 AC TYPE "D"

- ROAD R/W

8.0828 AC
90% TYPE "D" = 7.2745 AC
10% TYPE "B" = 0.8083 AC

- TOTAL "D"

= 6.7769 + 7.2745
= 14.0514 AC = 67.31 %

- TYPE "B" = 19.69%
TYPE "C" = 13.00%

- COMMERCIAL

0.4796 AC OF LANDSCAPING

9.04% "B"
9.04% "C"
81.92% "D"

D. Mark Goodwin & Associates, P.A.
Consulting Engineers
P.O. BOX 90606, ALBUQUERQUE, NM 87199
(505) 828-2200 FAX 797-9539

PROJECT VOLTERRA
SUBJECT DRAINAGE CALCS
BY GJK DATE 11-10-08
CHECKED _____ DATE _____
SHEET 2 OF ____

REVISED 3-3-09

• PARKING AREA & FUTURE FIRE STATION

2.1301 AC TYPE "D" = 0.5772 + 0.2066 = 0.7838 AC = 36.80%
TYPE "C" = 53.20 %
TYPE "B" = 10.00 %

• P_1 = 2.05 in
• P_6 = 2.60 in
• P_{24} = 3.20 in

• FROM AHYMO OUTPUT SHEETS 22-25

RESIDENTIAL Q = 87.06 CFS
COMMERCIAL Q = 11.88 CFS
PARKING/FUTURE F.S. Q = 8.12 CFS

• FIND RUNOFF IN RESIDENTIAL AREA PER UNIT TYPE.

THE 30 "A" UNITS ARE 17.35 % OF AREA = 0.503497 CFS per LOT
THE 32 "A1" UNITS ARE 20.57 % OF AREA = 0.559633
THE 32 "B" UNITS ARE 21.30 % OF AREA = 0.579493
THE 24 "B1" UNITS ARE 17.56 % OF AREA = 0.636989
THE 22 "C" UNITS ARE 11.68 % OF AREA = 0.462209
THE 12 "C1" UNITS ARE 6.84 % OF AREA = 0.496242
THE 6 "D" UNITS ARE 4.70 % OF AREA = 0.681970

* NOTE: THE COURTYARDS OF UNITS C & C1 ARE NOT INCLUDED IN THIS CALCULATION BECAUSE THEY WILL HAVE THEIR OWN STORM DRAIN.

• FIND Q IN GULFSTREAM 18 "B1" UNITS & 4 "A" UNITS

Q = 4 x 0.503497 + 18 x 0.636989
= 13.48 CFS

• FIND CAPACITY OF GULFSTREAM

d = 0.295 S = 2.10 % n = 0.017 24'-F-F MTBL C+G
WP = 24.59
A = 3.705
V = 3.59 F/S
Q = 13.30 CFS ≈ 13.48 CFS OK
$d + V^2/2g$ = 0.495 < 0.51 OK TO USE MOUNTABLE CURB+GUT.

• THERE IS 8.80 CFS IN GULFSTREAM FROM THE EXISTING 5TH UNIT 1 FROM THE SOUTH. (SHEET 18) 5TH REPORT
FIND THE EXISTING d and Q per side. (4.40 CFS)
S = 1.0% 48' F-F STD C+G n = 0.017

dmg
D. Mark Goodwin & Associates, P.A.
Consulting Engineers
P.O. BOX 90606, ALBUQUERQUE,NM 87199
(505) 828-2200 FAX 797-9539

PROJECT VOLTERRA
SUBJECT DRAINAGE CALCS
BY GJK DATE 11-10-08
CHECKED _____ DATE _____
SHEET 3 OF ____

REVISED 3-3-09

d = 0.35
wp = 13.60
A = 1.8406
$V_{1/2}$ = 2.30 F/S

$Q_{1/2}$ = 4.24 CFS ≈ 4.40 CFS OK
$d + v^2/2g$ = 0.43

THE CROWN OF SILVER CHARM (STREET L) IS 0.565 HIGH.
SINCE 0.43 IS LESS THAN 0.565 ALL FLOW FROM GULFSTREAM SHALL FLOW WEST ON SILVER CHARM AND NO FLOW WILL CONTINUE NORTH INTO VOLTERRA.

MOUNTABLE C+G CAN BE USED UNTIL THE CUL-DE-SAC WHERE STD C+G WILL BE USED TO DIRECT FLOWS INTO A SGL A, DBL THROAT INLET.

$Q/P = 3.0\,H^{1.5}$ Q = 13.48 CFS, P = 11.0'

H = 0.55' < 0.67 OK

• FIND REVISED FLOW IN SILVER CHARM (STREET L) AT JUAN TABO

PER JTH REPORT SHEET 25.

$Q = 8.80 + \frac{750 \times 72}{43560}(4.424)$

= 14.28 CFS

• FLOW WILL BE SPLIT DIFFERENTLY SINCE THE GULFSTREAM FLOW DOES NOT CROSS THE CROWN.

$Q_{south} = 8.80 + \frac{750 \times 36}{43560}(4.424)$

= 8.80 + 2.74

= 11.54 CFS

Q_{NORTH} = 2.74 CFS

FIND d ON SOUTH SIDE

d = 0.42 S = 2.2% n = 0.017 48' F-F STD C+G
wp = 17.17
A = 2.89
$V_{1/2}$ = 3.95 F/S
$Q_{1/2}$ = 11.42 CFS ≈ 11.54 CFS OK
$d + v^2/2g$ = 0.66 < 0.67 OK

FROM NOMO SHEET 18

THE EXISTING "DBL A" INLET CAN ACCEPT
Q_{GRATE} = 6.8 CFS

dmg
D. Mark Goodwin & Associates, P.A.
Consulting Engineers
P.O. BOX 90606, ALBUQUERQUE,NM 87199
(505) 828-2200 FAX 797-9539

PROJECT VALTERRA
SUBJECT DRAINAGE CALCS
BY GJK DATE 11-10-08
CHECKED _____ DATE _____
SHEET 4 OF ____

REVISED 3-3-09

Q PAST THE INLET
= 11.54 - 6.8
= 4.74 CFS

- THE STORMDRAIN THAT IS STUBBED OUT TO THE NORTH SIDE OF SILVER CHARM FROM THE SOUTHSIDE IS NOW IN THE RETURN OF BULL LEA. THIS WILL REMAIN PLUGGED.

- TOTAL Q INTO JUAN TABO IS

Q = 4.74 + 2.74
= 7.48 CFS

- THIS IS LESS THAN THE 12.27 CFS FROM THE JTH REPORT SHEET 25.

- THE FLOW INTO THE 90" STORMDRAIN IS ALSO REDUCED. THE Q IS 6.8 CFS INSTEAD OF 16.8 CFS.

- THE REVISED FLOW JUST NORTH OF SILVER CHARM ON JUAN TABO IS

$$Q = \left[\frac{1604 \times 72}{43560} + \frac{130 \times 72}{43560}\right] 4.424 + 7.48$$

= 20.16 CFS. THIS IS LESS THAN JTH Report Sheet 26

FIND WHAT EXISTING SGL "A" INLET ACCEPTS

Q EAST SIDE S = 3.0% n = 0.017 STD. C+G 56' F-F

$$= 20.16 - \left(\frac{1604 \times 72}{43560}\right) 4.424 / 2$$
= 20.16 - 5.86
= 14.30 CFS

d = 0.43
WP = 7.68
A = 3.06
$V_{1/2}$ = 4.703
$Q_{1/2}$ = 14.39 CFS ≈ 14.30 CFS OK

$d + V^2/2g$ = 0.77

FROM NOMO SHEET 19

Q GRATE = 7.0 CFS

Q PAST INLET
= 14.30 - 7.0
= 7.30 CFS WHICH IS LESS THAN 9.78 CFS IN JTH REPORT SHEET 26

dmg
D. Mark Goodwin & Associates, P.A.
Consulting Engineers
P.O. BOX 90606, ALBUQUERQUE, NM 87199
(505) 828-2200 FAX 797-9539

PROJECT VOLTERRA
SUBJECT DRAINAGE CALCS
BY GJK DATE 11-10-08
CHECKED _____ DATE _____
SHEET 5 OF ____

REVISED 3-3-09

• FIND Q IN BORREGO DR. AT CAVALCADE - 10 "A" UNITS, 4 "A," UNITS & 8 "B," UNITS

$Q = 10 \times 0.503497 + 4 \times 0.559633 + 8 \times 0.636989$
$= 12.37$ CFS

• FIND CAPACITY $S = 2.29\%$ 26' F-F $n = 0.017$
MTBL C+G

$d = 0.29$
$WP = 26.58$
$A = 3.62$
$V = 3.502$ F/S
$Q = 12.68$ CFS ≈ 12.37 CFS OK
$d + v^2/2g = 0.48 < 0.51$ OK

TRANSITION FROM MTBL TO STD AT CAVALCADE.

• FIND Q IN BORREGO DR. JUST SOUTH OF MONACHOS
14 "B" UNITS & 14 "A," UNITS
$Q = 14 \times 0.579493 + 14 \times 0.559633 + 12.37$
$= 28.32$

• FIND CAPACITY $S = 2.29\%$ 26' F-F STD C+G $n = 0.017$

$d = 0.435$
$WP = 26.87$
$A = 5.89$
$V = 4.808$ F/S
$Q = 28.32$ CFS ≈ 28.37 CFS OK
$d + v^2/2g = 0.78 < 0.85$ OK

• INSTALL ONE B INLET & ONE "DBL D" INLET 105' SOUTH OF MONACHOS ℄

$Q = 28.37 - [2(0.579493) + 2(0.559633)]$
$= 26.09$ CFS

$d = 0.425$
$WP = 26.85$
$A = 5.63$
$V = 4.669$ F/S
$Q = 26.28 \approx 26.09$ CFS OK

FROM NOMO. SHEETS 18 & 20

$Q_{GRATE} = 7.1$ CFS DBL D. $Q_{GRATE} = 9.5$ CFS TYPE B

Q PAST INLETS AND INTO MONACHOS
$= 28.37 - 7.1 - 9.5$
$= 11.77$ CFS

dmg
D. Mark Goodwin & Associates, P.A.
Consulting Engineers
P.O. BOX 90606, ALBUQUERQUE, NM 87199
(505) 828-2200 FAX 797-9539

PROJECT VOLTERRA
SUBJECT DRAINAGE CALCS
BY GJK DATE 11-10-08
CHECKED _____ DATE _____
SHEET 6 OF ____

REVISED 3-3-09

• FIND Q IN VOLPONI JUST SOUTH OF CALALCADE
8 "A," UNITS, 4 "B" UNITS, HALF OF 7 "C" UNITS & 4 "C," UNITS, 6 "D" UNITS

$Q = 8 \times 0.559633 + 4 \times 0.579493 + \frac{1}{2}(7 \times 0.462209) + \frac{1}{2}(4 \times 0.496242) + 6 \times 0.681970$
$= 13.50$ CFS

Find d. S = 2.19% 26' F-F MTBL C+G n=0.017

d = 0.295
WP = 26.59
A = 3.75
V = 3.505 F/S
Q = 13.14 CFS ≈ 13.50 CFS OK
$d + V^2/2g = 0.49 < 0.51$ OK

THIS IS THE TRANSITION POINT FROM MTBL TO STD C+G

• INSTALL TWO TYPE "B" INLETS 135' SOUTH OF MONACHOS ℄
ADD 6 "A," UNITS, 4 "B" UNITS, HALF OF 6 "C" UNITS & 3 "C," UNITS TO 13.50 CFS

$Q = 6 \times 0.559633 + 4 \times 0.579493 + \frac{1}{2}(6 \times 0.462209) + \frac{1}{2}(3 \times 0.496242) + 13.50$
$= 21.31$ CFS

d = 0.405 S = 2.19% 26' F-F STD C+G n = 0.017
WP = 26.81
A = 5.11
V = 4.28 F/S
Q = 21.89 CFS ≈ 21.31 CFS OK
$d + V^2/2g = 0.69$

FROM NOMO SHEET 20

$Q_{GRATE} = 8.4$ CFS
Q PAST INLETS
$= 21.31 - 2(8.4) = 4.51$ CFS

• FIND Q INTO MONACHOS ADD 2 "A," UNITS, 2 "B" UNITS, ½ OF 2 "C" UNITS & 1 "C," UNIT

$Q = 2 \times 0.559633 + 2 \times 0.579493 + \frac{1}{2}(2 \times 0.462209) + \frac{1}{2}(1 \times 0.496242) + 4.51$
$= 7.50$ CFS

• FIND Q IN DOMINO 110' SOUTH OF MONACHOS ℄
2 "A," UNITS, 4 "B" UNITS, HALF OF 13 "C" UNITS & 7 "C," UNITS

$Q = 2 \times 0.559633 + 4 \times 0.579493 + \frac{1}{2}(13 \times 0.462209) + \frac{1}{2}(7 \times 0.496242)$
$= 8.18$ CFS

d = 0.2625 S = 2.0% 24' F-F MTB C+G n = 0.017
WP = 24.525
A = 2.925
V = 2.995 F/S
Q = 8.76 CFS ≈ 8.18 CFS OK
$d + V^2/2g = 0.40 < 0.51$ OK

dmg
D. Mark Goodwin & Associates, P.A.
Consulting Engineers
P.O. BOX 90606, ALBUQUERQUE,NM 87199
(505) 828-2200 FAX 797-9539

PROJECT VOLTERRA
SUBJECT DRAINAGE CALCS
BY GSK DATE 11-10-08
CHECKED _____ DATE _____
SHEET 7 OF ____

REVISED 3-3-09

• INSTALL ONE "TYPE B" INLET AND ONE "OBL D" INLET FROM NO.MO SHEETS 18 AND 20

Q GRATE = 2.80 CFS "B" Q GRATE = 2.45 CFS "OBL D"

Q PAST INLETS INTO MONACHOS ADD HALF OF 2 "C" UNITS & 1 "C" UNIT

$= 8.18 - 2.8 - 2.45 + \frac{1}{2}(2 \times 0.462209) + \frac{1}{2}(1 \times 0.496242)$

$= 3.64$ CFS

• FIND Q AT END OF FAREGO

4 "A" UNITS, 2 "B" UNITS, 6 "B" UNITS, HALF OF 7 "C" UNITS & 4 "C" UNITS

$Q = 4 \times 0.559633 + 2 \times 0.579493 + 6 \times 0.636989 + \frac{1}{2}(7 \times 0.462209) + \frac{1}{2}(4 \times 0.496242)$

$= 9.83$ CFS

• INSTALL TWO "SGL A" INLETS IN SUMP

$Q/P = 3.0 H^{1.5}$ P = 11' FOR ONE SGL "A"

$H = 0.28'$

IF 50% CLOGGED 4.92 CFS EACH INLET

$H = 0.45' < 0.67$ OK

• FIND Q AT THE END OF CICADA - HALF OF 7 "C" UNITS & 4 "C" UNITS

$Q = \frac{1}{2}(7 \times 0.462209) + \frac{1}{2}(4 \times 0.496242)$

$= 2.61$ CFS

• FROM SHEET 4

THE FLOW INTO JUAN TABO AT SILVER CHARM IS LESS THAN ORIGINALLY DESIGNED IN THE TTH REPORT

$Q_{DIFFERENCE} = 12.27 - 7.48$

$= 4.79$ CFS > 2.61 CFS OK

THIS FLOW FROM CICADA WILL DIRECT DISCHARGE TO JUAN TABO AND ENTER THE EXISTING INLET AT THE NORTH RETURN.

• THE COMMERCIAL AREA WILL DISCHARGE TO JUAN TABO AND MONACHOS. 75% WILL DRAIN TO JUAN TABO AND 25% TO MONACHOS.

Q TO JUAN TABO

$= 11.88(0.75) = 8.91$ CFS

Q TO MONACHOS

$= 11.88(0.25) = 2.97$ CFS

dmg
D. Mark Goodwin & Associates, P.A.
Consulting Engineers
P.O. BOX 90606, ALBUQUERQUE,NM 87199
(505) 828-2200 FAX 797-9539

PROJECT VOLTERRA
SUBJECT DRAINAGE CALCS
BY GJK DATE 11-10-08
CHECKED _____ DATE _____
SHEET 8 OF ____
REVISED 3-3-09

• DESIGN MONACHOS STORMDRAIN

• FIND CAPACITY OF MONACHOS

d = 0.6 40' F-F STD C+G 1% n = 0.017

WP = 41.20
A = 12.77
V = 4.00 F/S
Q = 51.12 CFS
$d + V^2/2g$ = 0.85 > 0.85 OK

FLOW FROM BORREGO = 11.77 CFS
FLOW FROM VOLPONI = 7.50 CFS
FLOW FROM DOMINO = 3.64 CFS
FLOW FROM PARKING/FS = 8.12 CFS

TOTAL Q JUST WEST OF DOMINO 31.03 CFS

ADD FLOW FROM COMMERCIAL

Q = 31.03 + 2.97
= 34.00 CFS < 51.12 OK

• MONACHOS HAS STREET CAPACITY FOR ALL SURFACE FLOW BUT WILL NEED INLETS TO REMOVE WATER BECAUSE THE INTERSECTION OF MONACHOS AND JUAN TABO IS THE LOW POINT.

• SINCE GULFSTREAM IS A CUL-DE-SAC THE STORM DRAIN WILL BEGIN THERE AND FLOW NORTH TO MONACHOS, THEN WEST TO THE POND ON THE WEST SIDE OF JUAN TABO. WE WILL TRY AND USE THE EXISTING 48" RCP UNDER JUAN TABO.

GULFSTREAM	GRATE = 76.00	GRATE TO MH1	3.46%
	INV = 72.00		
MONACHOS MH1	RIM = 72.11	MH1 TO MH2	1%
	INV = 66.85		
BORREGO MH2	RIM = 70.42	MH2 TO MH3	1%
	INV = 65.65 (E) 65.15 (W) 65.15 (S)		
VOLPINO MH3	RIM = 68.32	MH3 TO MH4	1%
	INV = 63.06 (E) 62.56 (W) 64.06 (S)		
MONACHOS MH4	RIM = 66.95	MH4 TO MH5	2%
	INV = 61.27 (E) 61.17 (W) 63.10 (N+S)		

dmg
D. Mark Goodwin & Associates, P.A.
Consulting Engineers
P.O. BOX 90606, ALBUQUERQUE, NM 87199
(505) 828-2200 FAX 797-9539

PROJECT VOLTERRA
SUBJECT DRAINAGE CALCS
BY GJK DATE 3-3-09
CHECKED _____ DATE _____
SHEET 9 OF ____

DOMINO MH 5 RIM = 66.58
INV = 60.29(E) 60.19 (W) 61.29 (N+S) MH 5 TO MH 6 2%

MONACHOS MH 6 RIM = 65.98
INV = 59.11(E) 58.61(W) 60.61 (N+S) MH 6 TO MH 7 2%

MONACHOS MH 7 RIM = 64.00
INV = 57.33 (E) 57.23(W) 59.33 (N+S) MH 7 TO MH 8 2%

JUAN TABO MH 8 RIM = 64.57
EXIST INV = 56.65(E) 56.15(W). MH 8 TO OUTFALL 1.29%

• ADD TWO "DBL A" INLETS JUST EAST OF DOMINO ON MONACHOS

Q = 11.77 + 7.50
= 19.27 CFS

d = 0.45 S = 1.0% 40' F-F STD C+G n = 0.017
WP = 18.70
A = 3.4156
$V_{1/2}$ = 2.81 F/S
$Q_{1/2}$ = 9.61 CFS ≈ 19.27 CFS ÷ 2 ÷ 9.635 OK

FROM NOMO SHEET 18
Q GRATE = 5.4 CFS
Q PAST INLETS
= 19.27 − 2(5.4)
= 8.47 CFS

• ADD TWO TYPE "B" INLETS JUST WEST OF DOMINO ON MONACHOS

Q = 8.47 + 3.64 + 8.12
= 20.23 CFS

d = 0.46 S = 1.0 40' F-F STD C+G n = 0.017
WP = 19.21
A = 3.60
$V_{1/2}$ = 2.86 F/S
$Q_{1/2}$ = 10.31 CFS ≈ 20.23 CFS ÷ 2 = 10.12

FROM NOMO SHEET 20

Q GRATE = 6.4 CFS
Q PAST INLETS.
= 20.23 − 2(6.4)
= 7.43 CFS

• FIND Q AT JUAN TABO ON MONACHOS

Q = 7.43 + 2.97 (COMMERCIAL PORTION)
= 10.40 CFS

dmg D. Mark Goodwin & Associates, P.A.
Consulting Engineers
P.O. BOX 90606, ALBUQUERQUE,NM 87199
(505) 828-2200 FAX 797-9539

PROJECT VOLTERRA
SUBJECT DRAINAGE CALCS
BY GJK DATE 3-3-09
CHECKED _____ DATE _____
SHEET 10 OF ____

- FIND FLOWS ON JUAN TABO NORTH OF SILVER CHARM FROM SHEET 21

  $Q_{EASTSIDE}$ = 7.30 CFS GOES PAST INLET AT RETURN

  FROM JTH REPORT SHEET 26

  $Q_{WESTSIDE}$ = 5.86 CFS

- GOING NORTH TO THE EXISTING TWO "SGL A" INLETS IN JUAN TABO, FIND Q'S EACH INLET GETS

  FROM JTH REPORT SHEET 26

  Q_{WEST} = 7.79 CFS

  FROM THIS REPORT

  Q_{EAST} = 7.30 + 4.79 + 1.93 ← ROAD FLOW JTH REPORT SHEET 26
  = 14.02 CFS

- THE EXISTING WEST "SGL A" IS THE SAME AS JTH REPORT SHEET 27

  Q_{GATE} = 4.1 CFS

  Q PAST INLET
  = 7.79 − 4.1
  = 3.69 CFS

- FIND d FOR EXISTING "SGL A" ON THE EAST SIDE

  d = 0.55 S = 0.6%, 60' F-F STD C+G, n = 0.017
  WP = 23.80
  A = 5.49
  $V_{1/2}$ = 2.55 F/S
  $Q_{1/2}$ = 13.98 CFS ≈ 14.02 CFS OK

  FROM NOHO SHEET 19

  Q_{GATE} = 6.1 CFS

  Q PAST INLET
  = 14.02 − 6.1
  = 7.92 CFS

- FIND Q AT MONACHOS ON JUAN TABO

  Q_{WEST} = 10.67 CFS PER JTH REPORT SHEET 30

  Q_{EAST} = 7.92 + 8.91 (COMMERCIAL) + $\left(\frac{3.90 \times 80}{43560}\right)$ 1.424 ← ROAD FLOW
  = 20.00 CFS

- EXISTING WEST "DBL A" SUMP INLET REMAINS UNCHANGED PER JTH REPORT SHEET 30

  Q = 10.67 CFS P = 17'

  $Q/P = 3.0LH^{1.5}$ = 0.35' OK 50% CLOGGED = 0.56' OK

dmg D. Mark Goodwin & Associates, P.A.
Consulting Engineers
P.O. BOX 90606, ALBUQUERQUE,NM 87199
(505) 828-2200 FAX 797-9539

PROJECT VOLTERRA
SUBJECT DRAINAGE CALCS
BY GJK DATE 3-3-09
CHECKED _____ DATE _____
SHEET 11 OF ____

• FIND d ON EAST SIDE FOR EXISTING "DBL A" INLET

Q = 20.00 CFS

d = .62 S = 0.6% 60' F-F STD GG n = 0.017

WP = 27.37

A = 7.24

$V_{1/2}$ = 2.79 F/S

$Q_{1/2}$ = 20.20 CFS ≈ 20.00 CFS OK

FROM NOMO SHEET 18

Q_{GATE} = 9.0 CFS

Q POST INLET AND INTO INTERSECTION
= 20.00 - 9.00
= 11.00 CFS

• FIND TOTAL Q AT JUAN TABO ON MONACHOS JUST EAST OF THE INTERSECTION

Q = 11.00 + 10.40 + 7.62/2 (HALF OF BRIDGE PER JTH REPORT)
= 25.21 CFS 12.61 CFS PER INLET

• INSTALL TWO "DBL A" DBL THROAT INLETS IN SUMP

$Q/P = 3.0 L H^{1.5}$ P = 17' FOR EACH INLET

H = 0.25'

FROM NOMO SHEET 21

SIZE PIPE	SLOPE (%)	Q (CFS)
24	3	39
42	7	240
48	1.25	160
30	1	40
36	1	66
42	1	97

D. Mark Goodwin & Associates, P.A.
Consulting Engineers
P.O. BOX 90606, ALBUQUERQUE, NM 87199
(505) 828-2200 FAX 797-9539

PROJECT VOLTERRA
SUBJECT DRAINAGE CALCS
BY GJK DATE 3-3-09
CHECKED _____ DATE _____
SHEET 12 OF ____

REVISED 8-4-09

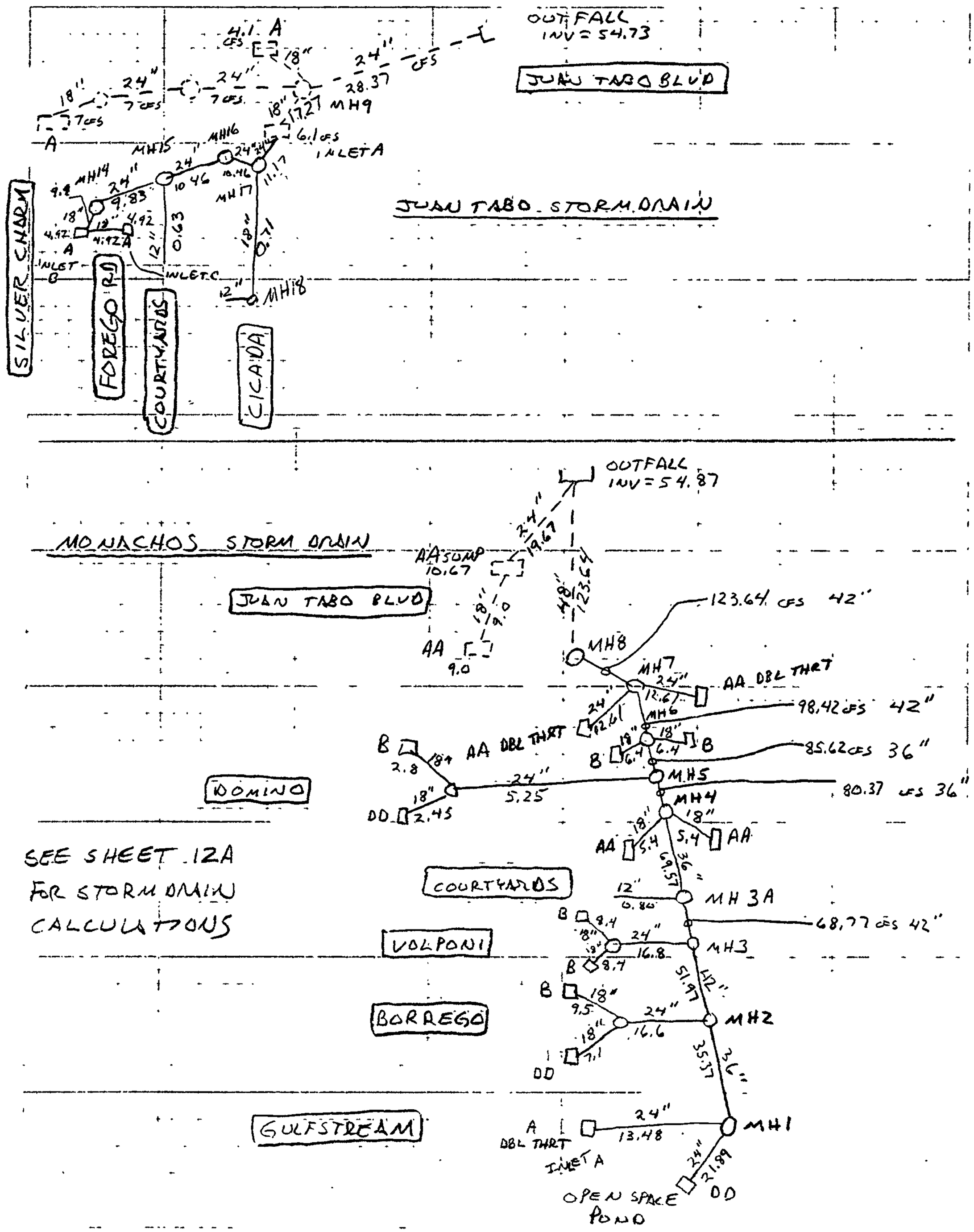

SEE SHEET 12A FOR STORM DRAIN CALCULATIONS

D. Mark Goodwin & Associates, P.A.
Consulting Engineers
P.O. BOX 90606, ALBUQUERQUE, NM 87199
(505) 828-2200 FAX 797-9539

PROJECT VOLTERRA
SUBJECT DRAINAGE CALCS
BY GJK DATE 8-4-09
CHECKED _____ DATE _____
SHEET 12A OF ____

STORM DRAIN DESIGN	SEE SHEETS
EXIST. JUAN TABO STORM DRAIN	35-40
MONACHOS TO GULFSTREAM	41-47
MONACHOS TO OPEN SPACE	48-52
MONACHOS TO BORREGO	53-55
MONACHOS TO VOLPONI	56-57
MONACHOS TO DOMINO	58-59
JUAN TABO TO CICADA	60-66

*FOR LOTS 2, 3, 8, 9, 10, 11, 12, 13, 26 + 27, BLOCK 7 WILL HAVE A TRENCH DRAIN INSTALLED THROUGH THE ENTRYWAY TO DRAIN THE BACKYARD TO THE FRONTYARD.

THIS DRAIN WILL CONSIST OF FIVE (5) UNITS OF POLYDRAIN - SEE SHEETS 12B to 12F OR EQUAL.

THE SLOPE OF THE DRAIN IS 0.6%

THE GRATE TO BE USED IS THE PERFORATED HEEL-PROOF GRATE NO. 452 OR EQUAL.

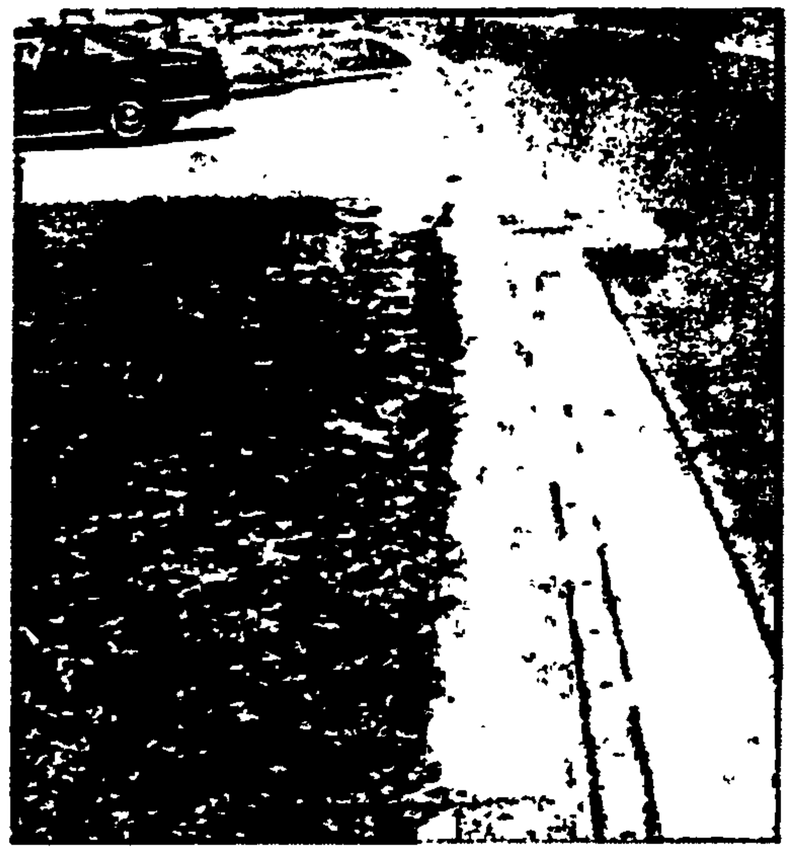

POLYDRAIN®

Pre-Engineered Surface Drainage

Sloped System Manual

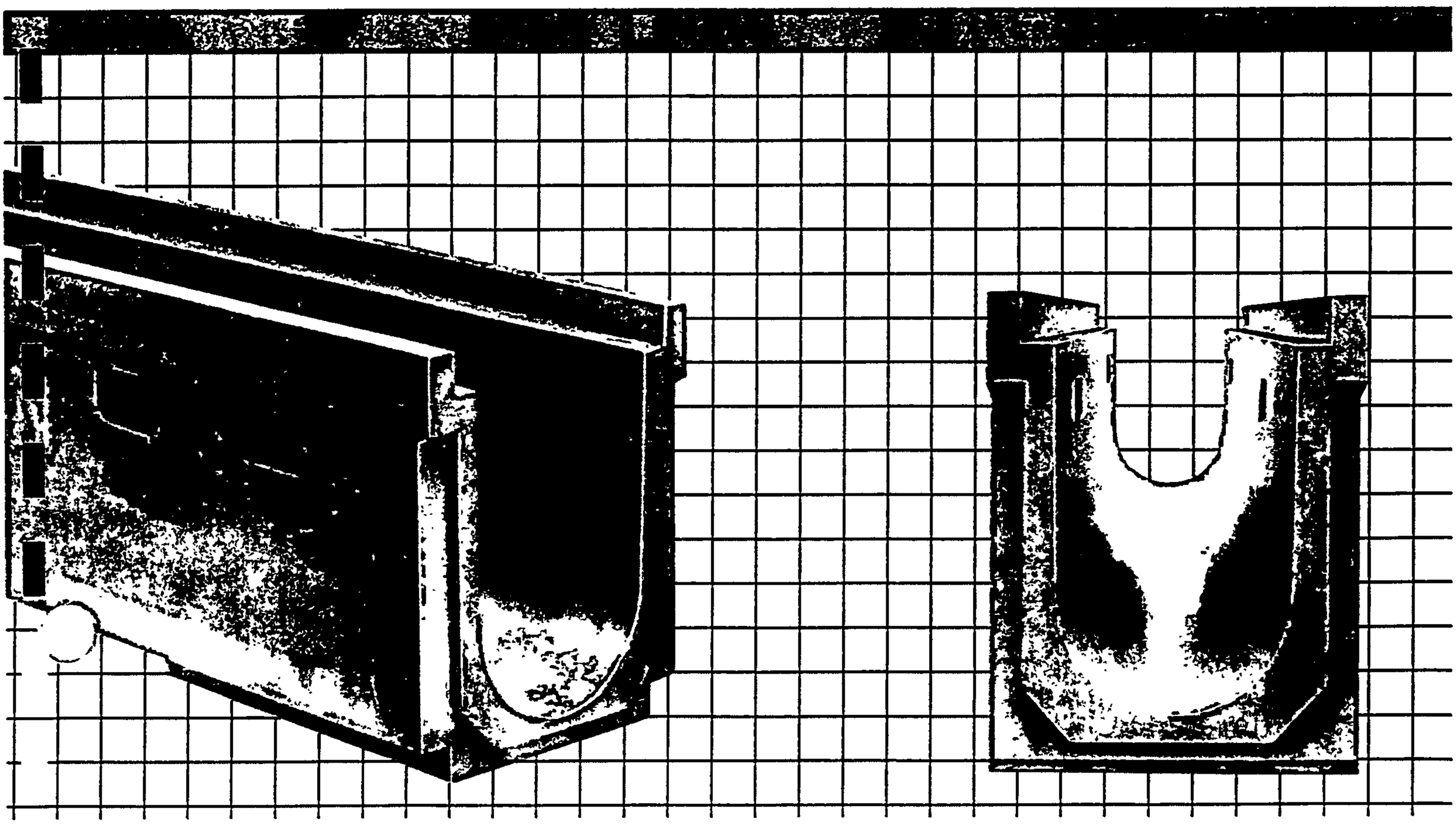

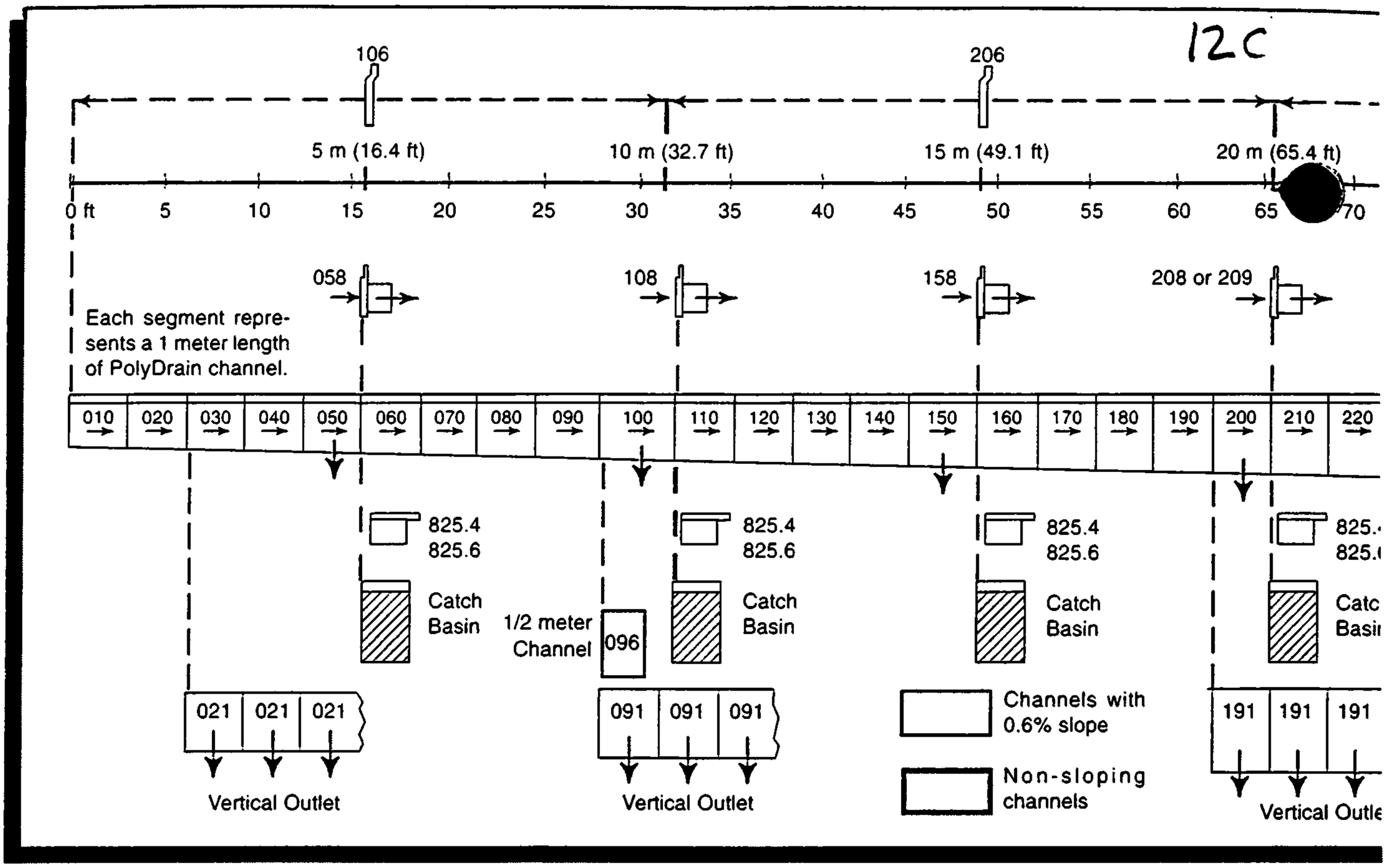

Channel Specifications

Use this chart to estimate flow capacities and invert elevations. Add a minimum of 100 mm (4 in.) to overall depths to estimate necessary excavation. Actual depth of excavation is governed by slab or pavement thickness.

When using the Model 510, 520 or 530 Series frame and grate systems, add 31 mm (1.2 in.) to the overall depths. When using Model 313 polymer concrete overlay grate, add 50 mm (2 in.) to the overall depths.

More detailed information is contained in other PolyDrain publications, if needed.

Note: Subtract 25 mm (1 in.) from minimum and maximum depths shown to obtain invert elevations.

Part No.	Channel Only				Channel With PolyWall I			
	Overall Channel Depth cm (in.)		Maximum Flow Rate LPM (GPM)	Weight kg (lbs)	Overall Channel Depth cm (in.)		Maximum Flow Rate LPM (GPM)	Weight kg (lbs)
	Minimum	Maximum			Minimum	Maximum		
010	12 9 (5 1)	13 5 (5.3)	488 (129)	14 1 (31 1)	30 9 (12 2)	31.5 (12 4)	1874 (495)	37.6 (82.9)
020	13.5 (5 3)	14.1 (5.6)	541 (143)	14.9 (32.8)	31.5 (12 4)	32.1 (12 6)	1927 (509)	38.4 (84.6)
021	14 1 (5 6)	14.1 (5 6)	564 (149)	14.5 (32.0)	32.1 (12.6)	32 1 (12 6)	1953 (516)	38.0 (83.8)
030	14 1 (5 6)	14 7 (5.8)	579 (153)	15.2 (33.6)	32.1 (12.6)	32.7(12.9)	1968 (520)	38.7 (85.4)
040	14 7 (5.8)	15 3 (6.0)	632 (167)	15.5 (34 3)	32.7 (12.9)	33.3 (13.1)	2025 (535)	39.0 (86 1)
050	15 3 (6.0)	15 9 (6.3)	674 (178)	15 3 (33.8)	33 3 (13 1)	33.9 (13.3)	2067 (546)	38.8 (85.6)
060	15.9 (6 3)	16.5 (6.5)	719 (190)	16 0 (35 2)	33.9 (13.3)	34.5 (13 6)	2112 (558)	39.5 (87 0)
070	16 5 (6.5)	17.1 (6.7)	772 (204)	16.4 (36 2)	34 5 (13.6)	35 1 (13.8)	2165 (572)	39 9 (88.0)
080	17 1 (6 7)	17 7 (7.0)	818 (216)	16.8 (37 0)	35.1 (13.8)	35.7 (14 0)	2214 (585)	40 3 (88.8)
090	17 7 (7 0)	18 3 (7.2)	863 (228)	17.2 (38.0)	35.7 (14.0)	36.3 (14.3)	2263 (598)	40.7 (89 8)
091	18.3 (7.2)	18.3 (7.2)	886 (234)	17.0 (37 4)	36.3 (14 3)	36.3 (14.3)	2286 (604)	40.5 (89.2)
096	18.3 (7 2)	18.3 (7.2)	878 (232)	9.1 (20 1)	36.3 (14 3)	36.3 (14 3)	2279 (602)	32.6 (71.9)
100	18.3 (7.2)	18.9 (7.4)	912 (241)	17 1 (37.6)	36 3 (14.3)	36 9 (14.5)	2313 (611)	40.6 (89.4)
110	18.9 (7 4)	19.5 (7.7)	958 (253)	18.1 (39 8)	36.9 (14.5)	37.5 (14 8)	2358 (623)	41.5 (91.6)
120	19 5 (7.7)	20.1 (7.9)	999 (264)	18.4 (40.6)	37.5 (14.8)	38.1 (15.0)	2400 (634)	41.9 (92 4)
130	20.1 (7.9)	20 7 (8 2)	1048 (277)	19.2 (42.4)	38.1 (15 0)	38.7 (15.2)	2453 (648)	42.7 (94 2)
140	20.7 (8.2)	21 3 (8 4)	1101 (291)	19 4 (42.8)	38 7 (15.2)	39.3 (15.5)	2506 (662)	42 9 (94.6)
150	21.3 (8 4)	21.9 (8.6)	1143 (302)	19 3 (42 6)	39 3 (15 5)	39.9 (15.7)	2551 (674)	42.8 (94 4)
160	21 9 (8 6)	22.5 (8.9)	1192 (315)	20 0 (44 2)	39 9 (15 7)	40 5 (15 9)	2597 (686)	43 5 (96 0)
170	22 5 (8 9)	23.1 (9 1)	1238 (327)	20 5 (45.1)	40 5 (15.9)	41 1 (16.2)	2646 (699)	44.0 (96.9)
180	23 1 (9.1)	23 7 (9 3)	1279 (338)	20 9 (46 1)	41.1 (16.2)	41.7 (16.4)	2687 (710)	44 4 (97 9)
190	23 7 (9.3)	24 3 (9.6)	1332 (352)	21 2 (46.8)	41 7 (16 4)	42.3 (16.7)	2744 (725)	44.7 (98.6)
191	24.3 (9 6)	24.3 (9.6)	1351 (357)	21 1 (46 6)	42 3 (16.7)	42.3 (16.7)	2759 (729)	44.6 (98 4)
200	24.3 (9 6)	24.9 (9.8)	1382 (365)	21 3 (46 9)	42 3 (16.7)	42.9 (16.9)	2790 (737)	44.8 (98 7)
210	24 9 (9.8)	25 5 (10.0)	1431 (378)	22.0 (48.6)	42 9 (16.9)	43 5 (17.1)	2839 (750)	45.5 (100 4)
220	25 5 (10 0)	26.1 (10.3)	1476 (390)	22.6 (49.8)	43.5 (17 1)	44 1 (17 4)	2888 (763)	46 1 (101 6)
230	26 1 (10 3)	26 7 (10 5)	1518 (401)	22.7 (50.0)	44 1 (17 4)	44.7 (17 6)	2930 (774)	46 2 (101 8)
240	26.7 (10 5)	27 3 (10.7)	1571 (415)	23 4 (51.5)	44 7 (17 6)	45.3 (17 8)	2983 (788)	46.9 (103.3)
250	27 3 (10.7)	27 9 (11.0)	1616 (427)	22.9 (50 5)	45 3 (17 8)	45.9 (18.1)	3028 (800)	46.4 (102 3)
260	27.9 (11.0)	28 5 (11.2)	1665 (440)	23 7 (52 4)	45.9 (18.1)	46 5 (18.3)	3077 (813)	47.2 (104.2)
270	28 5 (11 2)	29.1 (11.5)	1722 (455)	24 0 (53 0)	46 5 (18.3)	47.1 (18.5)	3134 (828)	47.5 (104 8)
280	29 1 (11 5)	29.7 (11.7)	1764 (466)	24 7 (54 5)	47 1 (18.5)	47.7 (18 8)	3179 (840)	48 2 (106.3)
290	29 7 (11 7)	30.3 (11 9)	1813 (479)	24 9 (54 9)	47.7 (18 8)	48.3 (19 0)	3225 (852)	48 4 (106 7)
291	30 3 (11 9)	30.3 (11.9)	1843 (487)	24.2 (53 4)	48 3 (19 0)	48.3 (19 0)	3259 (861)	47 7 (105.2)
300	30 3 (11 9)	30 9 (12 2)	1862 (492)	25 2 (55 6)	48 3 (19 0)	48 9 (19 3)	3279 (866)	48.7 (107 4)

Non-Sloping Channels

Note: Excludes Grate Lip, n = 0.008, Average Channel Depth

12 D

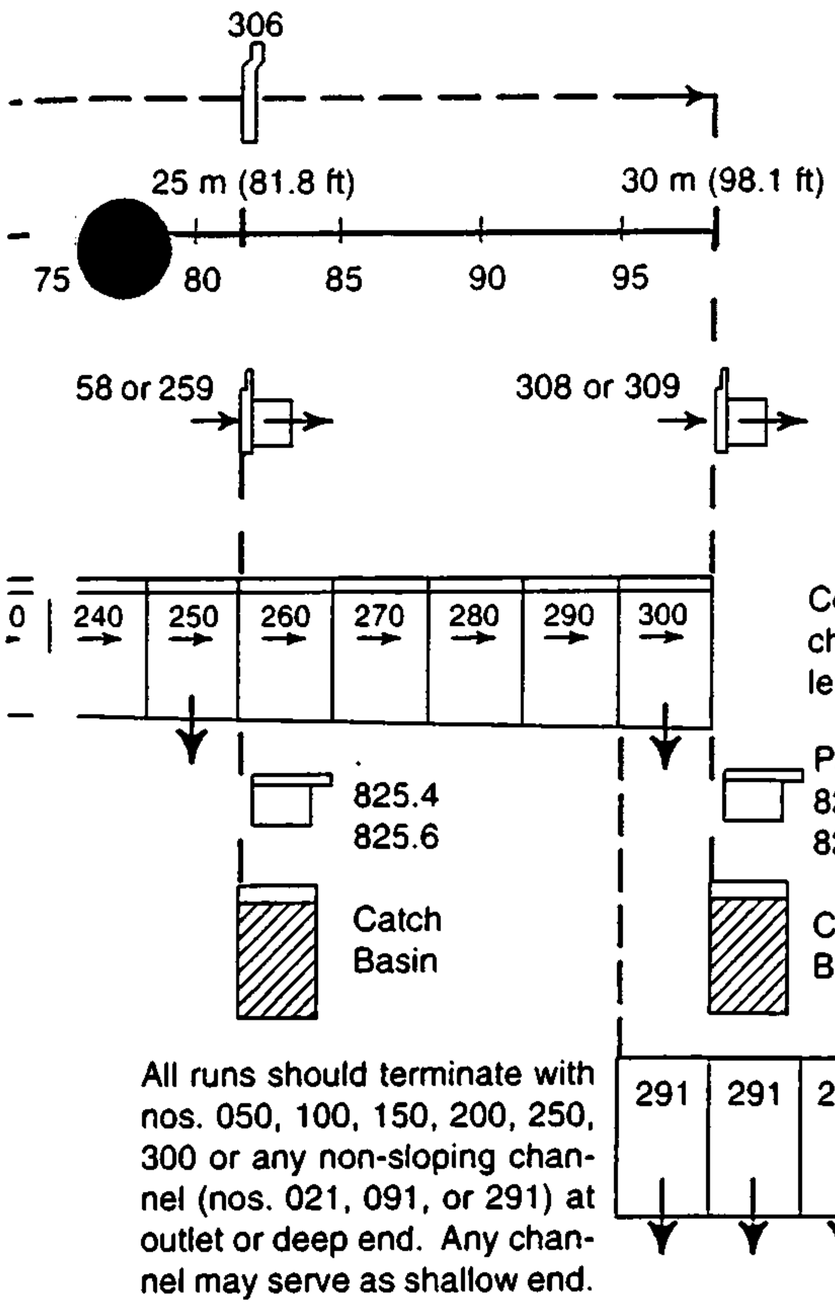

The *PolyDrain Trench Drain System* consists of 30 interlocking channels, each one meter (39.19") long. Special non-sloping channels can be inserted at specified intervals in order to extend channel runs. Catch basins, horizontal outlet plates, closed end plates and vertical outlet plate adapters can be installed at designated locations. Closed end plates terminate channel runs. NOTE: Always begin at the appropriate outlet channel, working towards the shallow end.

Connected sloping channels, each channel nom. 1 meter (39.19") in length.

Part No.	Vertical Outlet Locations
825.4 825.6	100 mm (4") or 150 mm (6")

All runs should terminate with nos. 050, 100, 150, 200, 250, 300 or any non-sloping channel (nos. 021, 091, or 291) at outlet or deep end. Any channel may serve as shallow end.

Non-sloping channel locations — All have 100 mm (4") and 150 mm (6") vertical outlet.

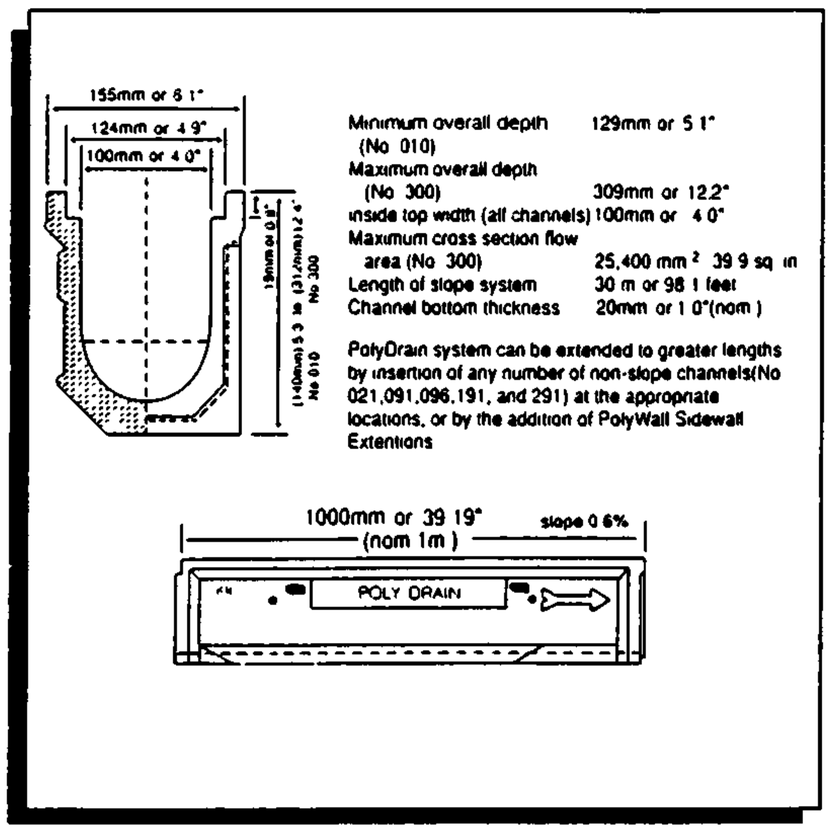

Channel With PolyWall II				Part No.
Overall Channel Depth cm (in.)		Maximum Flow Rate LPM (GPM)	Weight kg (lbs)	
Minimum	Maximum			
48.9 (19.3)	49.5 (19.5)	3312 (875)	46.3 (106.5)	010
49.5 (19 5)	50.1 (19.7)	3365 (889)	47.1 (108.2)	020
50.1 (19 7)	50.1 (19 7)	3391 (896)	46.7 (107.4)	021
50.1 (19 7)	50 7 (20.0)	3407 (900)	47.4 (109 0)	030
50.7 (20 0)	51 3 (20.2)	3463 (915)	47 7 (109.7)	040
51.3 (20 2)	51.9 (20 4)	3505 (926)	47 5 (109 2)	050
51.9 (20.4)	52.5 (20.7)	3554 (939)	48 2 (110.6)	060
52 5 (20.7)	53.1 (20.9)	3607 (953)	48.6 (111 6)	070
53.1 (20.9)	53.7 (21.1)	3656 (966)	49 0 (112 4)	080
53.7 (21.1)	54 3 (21 4)	3702 (978)	49.4 (113.4)	090
54.3 (21 4)	54.3 (21 4)	3724 (984)	49.2 (112.8)	091
54 3 (21.4)	54 3 (21 4)	3721 (983)	41.3 (95.5)	096
54.3 (21 4)	54 9 (21.6)	3755 (992)	49 3 (113.0)	100
54.9 (21 6)	55.5 (21.9)	3800 (1004)	50.3 (115.2)	110
55.5 (21 9)	56.1 (22 1)	3842 (1015)	50.6 (116 0)	120
56 1 (22 1)	56 7 (22 3)	3891 (1028)	51.4 (117.8)	130
56 7 (22 3)	57 3 (22.6)	3948 (1043)	51.6 (118.2)	140
57 3 (22.6)	57.9 (22.8)	3993 (1055)	51.5 (118 0)	150
57 9 (22 8)	58 5 (23.0)	4039 (1067)	52 3 (119 6)	160
58.5 (23 0)	59 1 (23.3)	4088 (1080)	52.7 (120.5)	170
59 1 (23.3)	59.7 (23 5)	4129 (1091)	53 1 (121.5)	180
59 7 (23 5)	60.3 (23 7)	4186 (1106)	53 4 (122 2)	190
60.3 (23.7)	60.3 (23.7)	4201 (1110)	53 3 (122 0)	191
60.3 (23.7)	60 9 (24 0)	4232 (1118)	53.5 (122 3)	200
60.9 (24.0)	61 5 (24 2)	4281 (1131)	54.2 (124 0)	210
61.5 (24.2)	62.1 (24.4)	4330 (1144)	54.8 (125 2)	220
62.1 (24 4)	62.7 (24.7)	4372 (1155)	54 9 (125.4)	230
62 7 (24.7)	63.3 (24 9)	4425 (1169)	55 6 (126.9)	240
63.3 (24 9)	63.9 (25 2)	4470 (1181)	55.1 (125 9)	250
63.9 (25 2)	64 5 (25 4)	4519 (1194)	55 9 (127 8)	260
64 5 (25 4)	65 1 (25 6)	4576 (1209)	56 2 (128.4)	270
65.1 (25 6)	65.7 (25 9)	4621 (1221)	56.9 (129 9)	280
65 7 (25 9)	66.3 (26.1)	4671 (1234)	57 1 (130 3)	290
66 3 (26 1)	66.3 (26 1)	4701 (1242)	56.4 (128.8)	291
66 3 (26 1)	66.9 (26 3)	4720 (1247)	57 4 (131 0)	300

Load Classifications

Load Class	Description		Design Load (psi)	Suitable Grates
A		**Light Duty** Pedestrian, Golf Carts, Bicycles, etc.	1-60	313, 404, 405, 406, 407, 444, 445, 446, 447, 410, 411, 452, 453, 430-435
B		**Medium Duty** Automobiles, Light Trucks, Light Aircraft (Slow Speed)	61-175	412, 413, 454, 455, 720, 721, 420, 421, 440, 441
C		**Heavy Duty** Pneumatic Tire Vehicles (High Speed), Highways	176-325	422, 423, 442, 443, 722, 723
D		**Extra Heavy Duty** High-Impact & Severe Point Loads	326-575	502, 500, 504, 604 512, 512AF, 514AF 514
E		**Special Duty** Heavy Commercial Aircrafts, Snow Plows	576-775	503, 505, 614 513, 515, 513AF, 522, 515AF, 524, 532, 534

Indicates Hard Tire Forklift Loading Capability

Grate Testing Procedure

Grate/cover is placed in a support fixture in a load testing machine. A steel rod, 100 mm (4") in diameter by 305 mm (12") in length, is placed longitudinally at the weakest point of the grate/cover (column, sheer or beam). Load is applied to the rod until grate/cover failure occurs. The minimum failure load is then used to compute the Load Class formula listed with the drawing. Thus, Load Class as designated in the table is based on the worst case service load carrying capacity per linear foot of grate/cover. Test assumes a minimum of contact area. Actual applications may involve a larger load contact patch, thereby reducing stress.

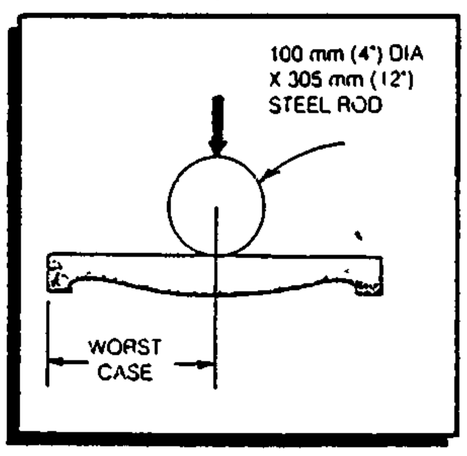

300 Series Grate

Polymer Slotted Grate

Part No	Load Class	Material	Length m (in.)	Weight kg (lb)	Locking Device
313	A	Polymer concrete	0.3 (13.00)	4.1 (9)	NA

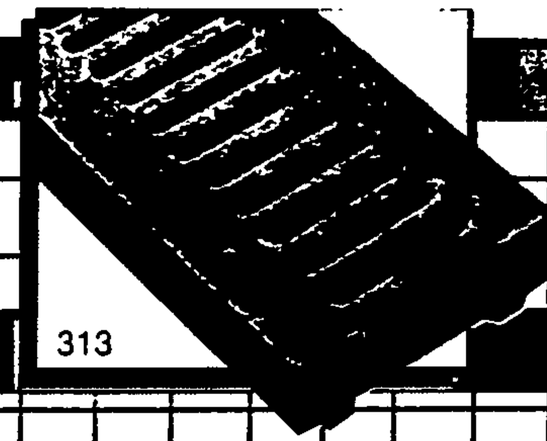

12E

400 Series Grates

Solid Covers

Part No	Load Class	Material	Length m (in.)	Weight kg (lb)	Locking Device
404	A	Galvanized steel	1.0 (39.19)	2.7 (6)	810A
405	A	Galvanized steel	0.5 (19.60)	1.4 (3)	810A
406	A	Galvanized steel embossed	1.0 (39.19)	2.7 (6)	810A
407	A	Galvanized steel embossed	0.5 (19.60)	1.4 (3)	810A
444	A	18-8 Stainless steel	1.0 (39.19)	3.2 (7)	840A
445	A	18-8 Stainless steel	0.5 (19.60)	1.8 (4)	840A
446	A	18-8 Stainless steel embossed	1.0 (39.19)	3.2 (7)	840A
447	A	18-8 Stainless steel embossed	0.5 (19.60)	1.8 (4)	840A

(500 cover is also compatible with the 510 frame.)

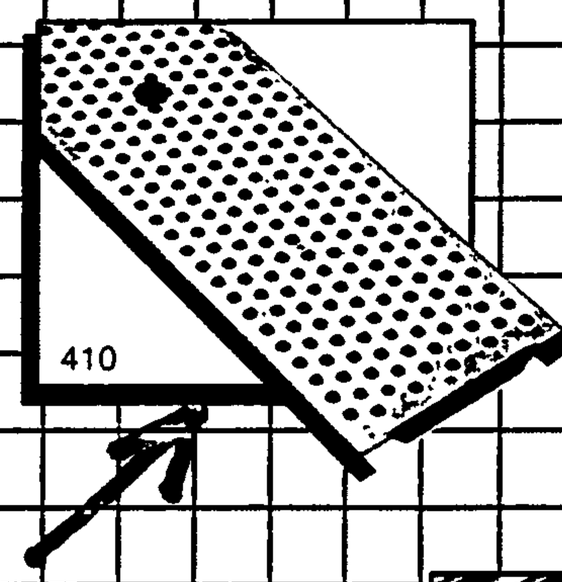

Perforated Heel-Proof Grates

Part No.	Load Class	Material	Length m (in.)	Weight kg (lb)	Locking Device
410	A	Galvanized steel	1.0 (39.19)	2.7 (6)	810A
411	A	Galvanized steel	0.5 (19.60)	1.4 (3)	810A
452	A	18-8 Stainless steel	1.0 (39.19)	2.7 (6)	840A
453	A	18-8 Stainless steel	0.5 (19.60)	1.4 (3)	840A

Load Class A-B-C perforated grating available on special order basis.

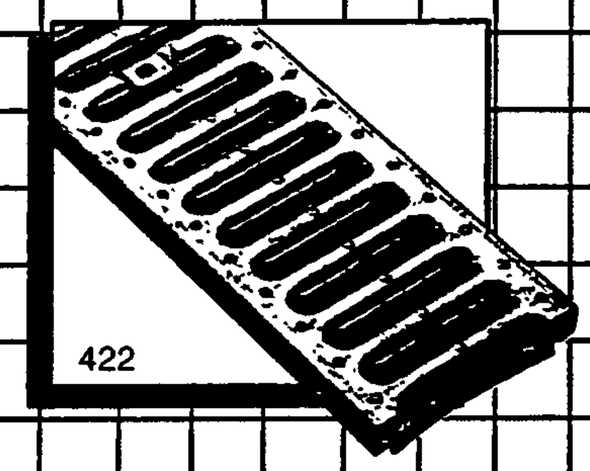

Reinforced Perforated Heel-Proof Grate

Part No	Load Class	Material	Length m (in.)	Weight kg (lb)	Locking Device
412	A-B	Galvanized steel	1.0 (39.19)	3.6 (8)	810A
413	A-B	Galvanized steel	0.5 (19.60)	1.8 (4)	810A
454	A-B	18-8 Stainless steel	1.0 (39.19)	3.6 (8)	840A
455	A-B	18-8 Stainless steel	0.5 (19.60)	1.8 (4)	840A

Load Class A-B-C perforated grating available on special order basis.

Slotted Steel Grates

Part No	Load Class	Material	Length m (in.)	Weight kg (lb)	Locking Device
420	A-B	Galvanized steel	1.0 (39.19)	2.7 (6)	811A
421	A-B	Galvanized steel	0.5 (19.60)	1.4 (3)	811A
440	A-B	18-8 Stainless steel	1.0 (39.19)	2.7 (6)	841A
441	A-B	18-8 Stainless steel	0.5 (19.60)	1.4 (3)	841A

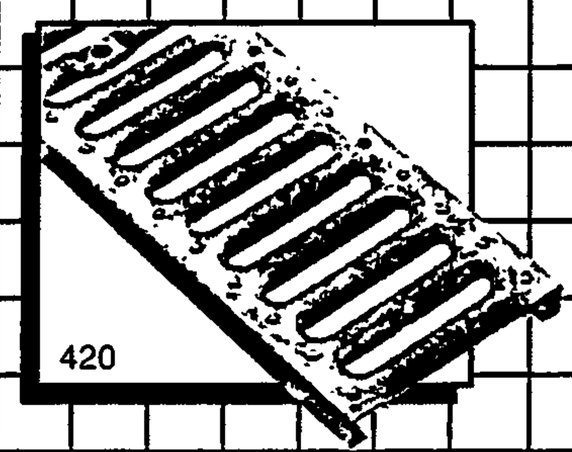

H20 Reinforced Slotted Steel Grates

Part No	Load Class	Material	Length m (in.)	Weight kg (lb)	Locking Device
422	A-B-C	Galvanized steel	1.0 (39.19)	3.6 (8)	811A
423	A-B-C	Galvanized steel	0.5 (19.60)	1.8 (4)	811A
442	A-B-C	18-8 Stainless steel	1.0 (39.19)	3.6 (8)	841A
443	A-B-C	18-8 Stainless steel	0.5 (19.60)	1.8 (4)	841A

Polyester Coated Steel Slotted Grates

Part No.	Load Class	Material	Length m (in.)	Weight kg (lb)	Locking Device
430	A	Galvanized steel, gray	1.0 (39.19)	2.7 (6)	811A
431	A	Galvanized steel, gray	0.5 (19.60)	1.4 (3)	811A
432	A	Galvanized steel, white	1.0 (39.19)	2.7 (6)	811A
433	A	Galvanized steel, white	0.5 (19.60)	1.4 (3)	811A
434	A	Galvanized steel, black	1.0 (39.19)	2.7 (6)	811A
435	A	Galvanized steel, black	0.5 (19.60)	1.4 (3)	811A

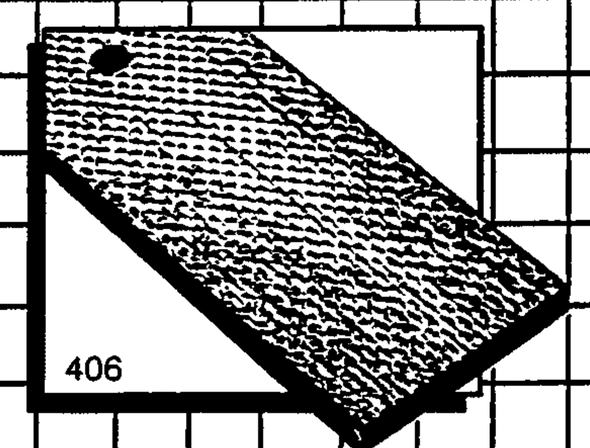

500 Series Grates

H20 Ductile Iron Solid Cover

Part No.	Load Class	Material	Length m (in.)	Weight kg (lb)	Locking Device
500*	A-B-C-D	Ductile iron	0.5 (19.60)	5.4 (12)	811C

*500 Cover is also compatible with the 510 frame

Slotted Grates

Part No	Load Class	Material	Length m (in.)	Weight kg (lb)	Locking Device
502	A-B-C-D	Ductile iron	0.5 (19.60)	3.6 (8)	811B
503	A-B-C-D-E	Ductile iron	0.5 (19.60)	6.0 (11)	811B

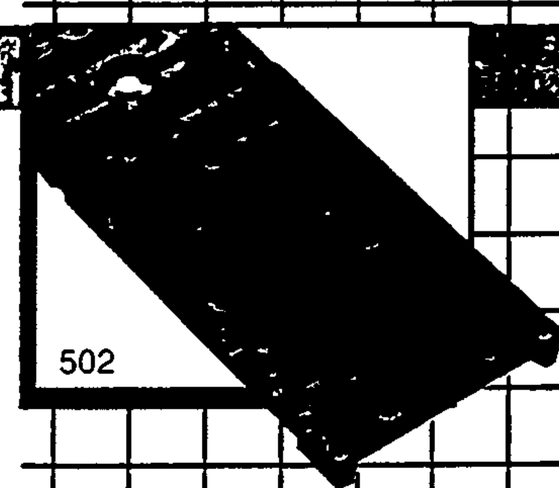

Longitudinally Slotted Grate

Part No	Load Class	Material	Length m (in.)	Weight kg (lb)	Locking Device
504	A-B-C-D	Ductile iron	0.5 (19.60)	4.5 (10)	811C

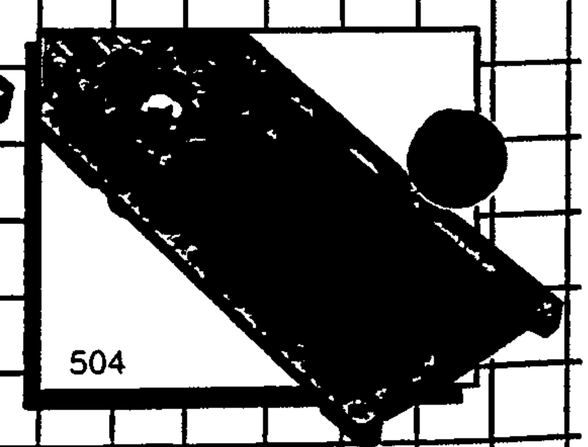

12F

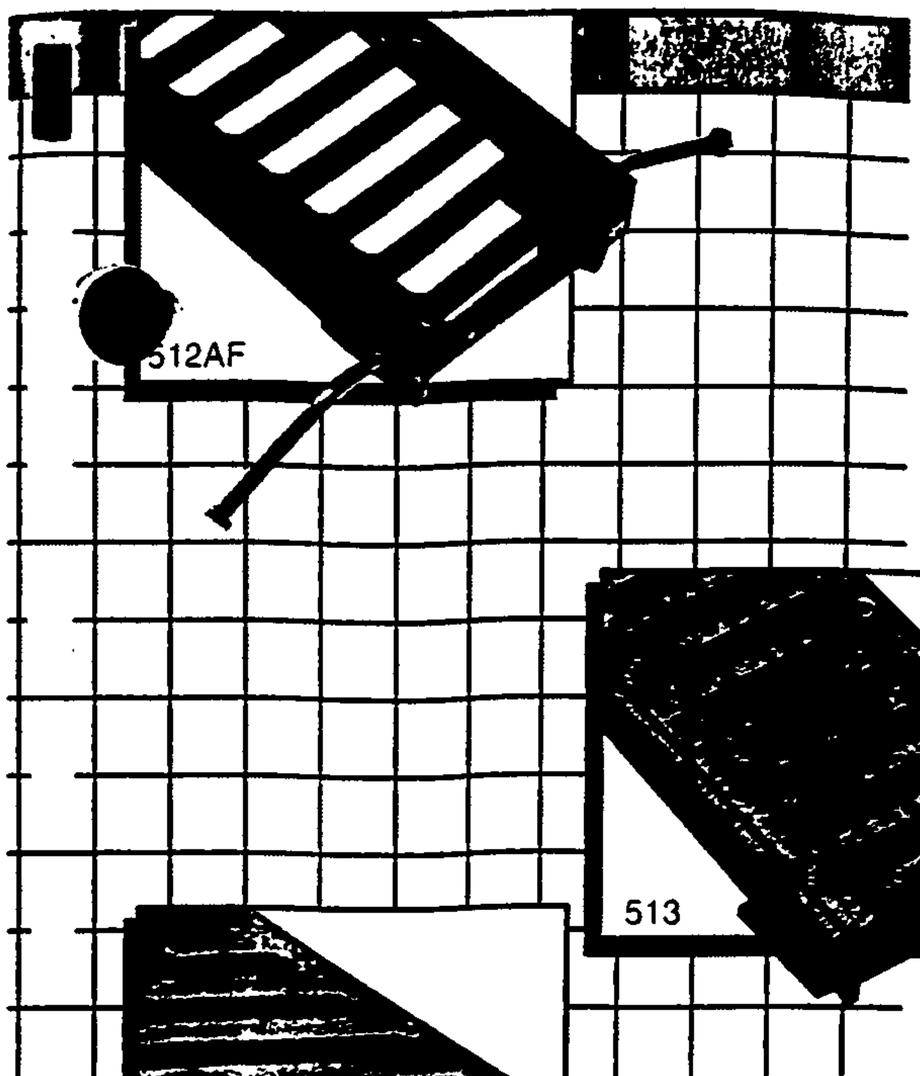

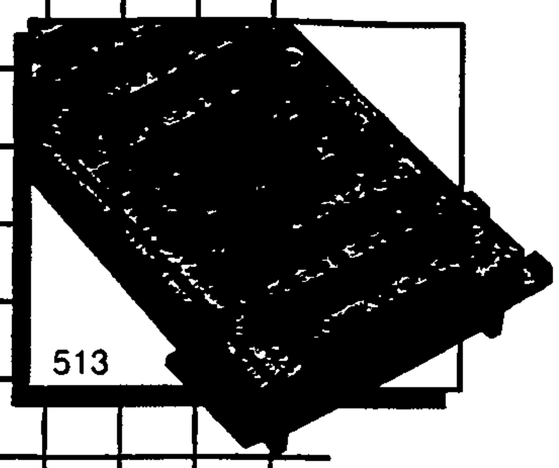

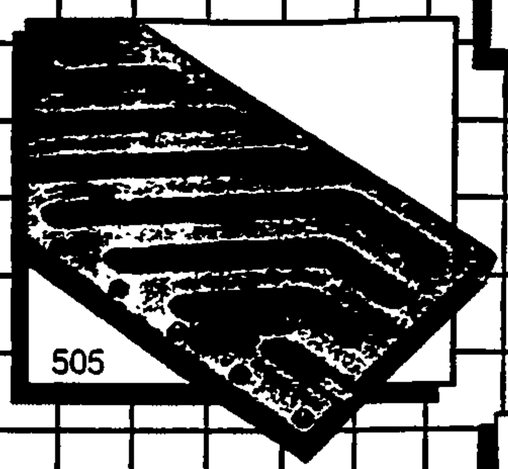

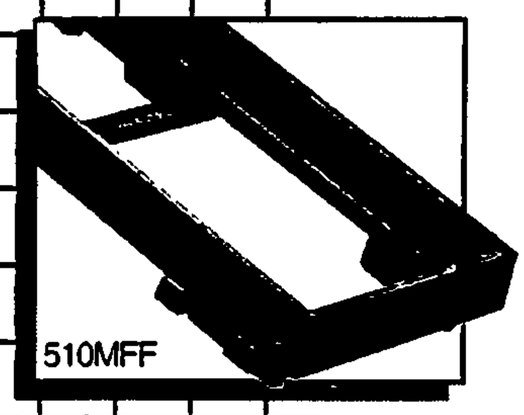

H20 Ornamental Ductile Iron Grate

	Part No	Load Class	Material	Length m (in.)	Weight kg (lb)	Locking Device
⌂	505	A-B-C-D-E	Ductile iron ornamental	0.5 (19 60)	4.5 (10)	811C

510 Frame & Grate Assemblies

	Part No	Load Class	Material	Length m (in.)	Weight kg (lb)	Locking Device
	512	A-B-C-D	Ductile iron	0.5 (19 60)	6.8 (15)	815B
	513	A-B-C-D-E	Ductile iron	0 5 (19.60)	8.5 (18)	815B
⌂	514	A-B-C-D	Ductile iron	0 5 (19.60)	7 7 (17)	815C
⌂	515	A-B-C-D-E	Ductile iron	0 5 (19 60)	7.7 (17)	815B

510AF Frame & Grate Assemblies

	Part No	Load Class	Material	Length m (in.)	Weight kg (lb)	Locking Device
	512AF	A-B-C-D	Ductile iron frame and 502	0 5 (19 60)	6.8 (15)	815B
	513AF	A-B-C-D-E	Ductile iron frame and 503	0 5 (19.60)	8.5 (18)	815B
⌂	514AF	A-B-C-D	Ductile iron frame and 504	0 5 (19.60)	7 7 (17)	815C
⌂	515AF	A-B-C-D-E	Ductile iron frame and 505	0 5 (19 60)	7.7 (17)	815B

520 Frame & Grate Assemblies

Part No	Load Class	Material	Length m (in.)	Weight kg (lb)	Locking Device
522	A-B-C-D-E	Gray iron (class 30) and 502 style	0 5 (19 60)	12.7 (28)	815E
524	A-B-C-D-E	Gray iron (class 30) frame and 504 style ductile	0 5 (19 60)	10.4 (23)	815F

530 Frame & Grate Assemblies

Part No.	Load Class	Material	Length m (in.)	Weight kg (lb)	Locking Device
532	A-B-C-D-E	Gray iron (class 30) and 502 style	0 5 (19.60)	13.6 (30)	815B
534	A-B-C-D-E	Gray iron (class 30) frame and ductile iron longitudinally-slotted grate	0 5 (19 60)	11.3 (25)	815F

510MFF Fabrication/End Frame

Part No	Load Class	Material	Length m (in.)	Weight kg (lb)	Locking Device
510MFF	N/A	Ductile iron	0 5 (19 60)	4.1 (9)	N/A

All ductile iron grates and frames available with galvanized coating.

600 Series Grates

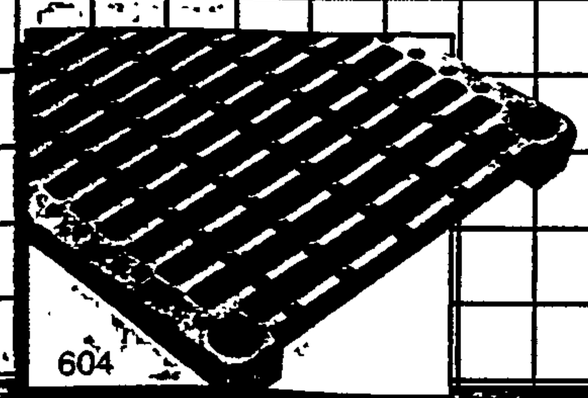

H20 Slotted Grates For 600 Catch Basins

Part No	Load Class	Material	Length m (in)	Weight kg (lb)	Locking Device
604	A-B-C-D	Gray Iron (class 30)	0.48 (18 87)	24 9 (55)	828
614	A-B-C-D-E	Ductile iron	0.48 (18 87)	39 5 (87)	828

700 Series Grates

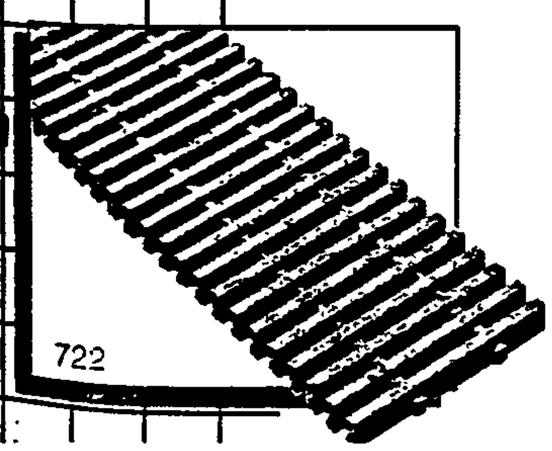

Vinyl Ester FRP Slotted Grates

Part No	Load Class	Material	Length m (in.)	Weight kg (lb)	Locking Device
720	A-B	Vinyl ester (bars on 1" centers)	1 0 (39 19)	1 8 (4)	887
721	A-B	Vinyl ester (bars on 1" centers)	0 5 (19 60)	0 9 (2)	887
722	A-B-C	Vinyl ester (bars on 0 6" centers)	1 0 (39 19)	2 7 (6)	887
723	A-B-C	Vinyl ester (bars on 0 6" centers)	0 5 (19 60)	1 4 (3)	887

KEY TO SPECIAL COMPLIANCE GRATES

	Meets Americans with Disabilities Act (ADA) Requirements
H20	Meets or Exceeds AASHTO-H20 Standards

D. Mark Goodwin & Associates, P.A.
Consulting Engineers
P.O. BOX 90606, ALBUQUERQUE,NM 87199
(505) 828-2200 FAX 797-9539

PROJECT VOLTERRA
SUBJECT DRAINAGE CALCS
BY GJK DATE 3-3-09
CHECKED _____ DATE _____
SHEET 13 OF ____

- SIZE OUTFALL FOR THE OPEN SPACE AREA TO THE EAST OF THE SITE
- THE AREA IS DIVIDED INTO 6 DRAINAGE BASINS

BASIN 1

2.5659 AC
40% TYPE "B"
60% TYPE "C"

BASIN 2

2.0095 AC
100% TYPE "C"

BASIN 3

7.0438 AC
50% TYPE "B"
50% TYPE "C"

BASIN 4

0.4108 AC
100% TYPE "B"

BASIN 5

0.7127 AC
100% TYPE "B"

BASIN 11

0.8250 AC
100% TYPE "A"

THESE FLOWS WILL BE DIRECTED TOWARD A "DBL D" INLET IN SUMP CONDITION NEAR MONACHOS ROAD. THE GRATE OF THE INLET WILL BE SET 6" ABOVE GRADE TO ALLOW FOR SILT TO FALL OUT.

ELEV	AREA(SF)	VOLUME(AC-FT)	OUTFLOW
72.5	4085	0	0
73	4823	0.0511	0.1
74	6436	0.1804	51.0

FROM AHYMO OUTPUT SHEETS 26-31
Q_{max} = 20.86 CFS
MAX WATER SURFACE = 73.41

dmg D. Mark Goodwin & Associates, P.A.
Consulting Engineers
P.O. BOX 90606, ALBUQUERQUE, NM 87199
(505) 828-2200 FAX 797-9539

PROJECT VOLTERRA VILLAGE
SUBJECT DRAINAGE CALCS
BY GJK DATE 3-27-09
CHECKED _____ DATE _____
SHEET 14 OF ____

- SIZE STORM DRAINS FOR COURTYARDS OF DETACHED UNITS
  - THERE WILL BE THREE PRIVATE STORMDRAINS TO DRAIN THE COURTYARDS. ONE WILL DRAIN TO JUAN TABO, ONE TO CAVALCADE AND ONE TO MONACHOS. THE PRIVATE STORMDRAINS WILL BE IN A 5' PRIVATE SD EASEMENT AND WHEN THEY REACH THE PUBLIC ROW WILL BECOME PUBLIC AS THEY ATTACH TO PUBLIC STORMDRAIN.
  - THE COURTYARDS WILL BE 100% CONCRETE AND WILL EACH DRAIN TO AN AREA DRAIN.
  - EACH STORMDRAIN WILL BE AT A SLOPE OF AT LEAST 2% AND WILL BE 12" PVC.
  - EACH AREA DRAIN WILL BE 15"x15" AND HAVE AND OPEN AREA OF 57 SQIN = 0.396 SF WITH A VERTICAL OUTLET OF 6".

- COURTYARD STORMDRAIN TO MONACHOS

  TOTAL AREA OF COURTYARDS
  = 7145 SF
  = 0.164027 AC
  100% "D"

- COURTYARD STORMDRAIN TO CAVALCADE

  TOTAL AREA OF COURTYARDS
  = 6316 SF
  = 0.144995 AC
  100% "D"

- COURTYARD STORMDRAIN TO JUAN TABO

  TOTAL AREA OF COURTYARDS
  = 5651 SF
  = 0.129729 AC
  100% "D"

FROM AHYMO OUTPUT SHEETS 32-34

Q_M = 0.80 CFS

Q_C = 0.77 CFS

Q_{JT} = 0.63 CFS

D. Mark Goodwin & Associates, P.A.
Consulting Engineers
P.O. BOX 90606, ALBUQUERQUE, NM 87199
(505) 828-2200 FAX 797-9539

PROJECT Volterra Village
SUBJECT Drainage Calcs
BY GJK DATE 3-27-09
CHECKED _____ DATE _____
SHEET 15 OF ____

• ALL THREE COURTYARD STORM DRAINS WILL BE AT A 2% SLOPE.

FROM NOMO SHEET 21

12" PVC AT 2% CAN CARRY 6 CFS

• FOR THIS REPORT, A "WATTS FD-450-F AREA DRAIN" WILL BE CALLED OUT. THIS IS A 15"x15" DRAIN.

SEE SHEETS 16 + 17

IN SUMP CONDITION, FIND H

$Q/P = 3.0 H^{1.5}$ $P = \frac{4 \times 15}{12} = 5$

• THE COURTYARD VARY IN AREA WITH THE SMALLEST BEING 330 SF AND THE LARGEST BEING 1413 SF.

WE WILL USE THE LARGEST TO FIND H, THIS IS THE LOT ALONG MONACHOS.

TOTAL Q OF THIS STORMDRAIN IS 0.80 CFS

• FIND Q OF LOT

$Q = \frac{1413}{7145}(0.80)$

$= 0.1582$ CFS

$H = 0.05' < 0.25'$ OK

IF GRATE IS 50% CLOGGED

$H = 0.076' < 0.25'$ OK

IF GRATE IS 90% CLOGGED

$H = 0.22' < 0.25'$ OK

WATTS®	FD-450-F Tag: _____	Area Drain with 15"x15" Fixed Top

SPECIFICATION: Watts Drainage FD-450-F epoxy coated cast iron area drain with anchor flange, weepholes, 15-5/8"x15-5/8"(397x397) square fixed top with ductile iron grate, and no hub (standard) outlet.

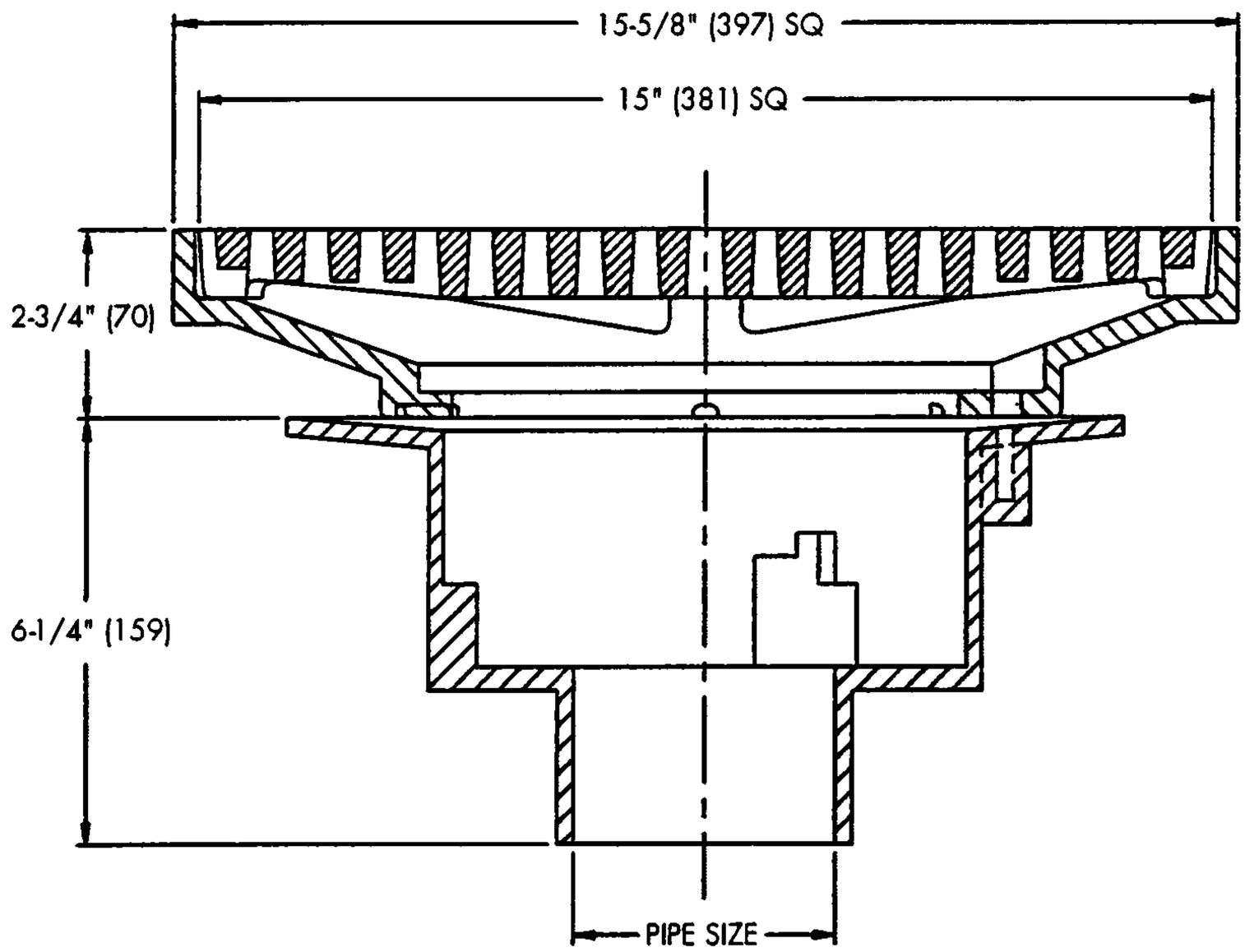

Components

Pipe Sizing (Select One)

Suffix	Description	
2	2"(51) Pipe Size	☐
3	3"(76) Pipe Size	☐
4	4"(102) Pipe Size	☐
5	5"(152) Pipe Size (NH Only)	☐
6	6"(152) Pipe Size	☐
8	8"(203) Pipe Size (NH Only)	☐

Outlet Type (Select One)

Suffix	Description	
NH	No Hub (MJ)	☐
P	Push On	☐
T	Threaded Outlet	☐
X	Inside Caulk	☐

Options (Select One or More)

Suffix	Description	
-1	Nickel Bronze Top	☐
-5	Sediment Bucket	☐
-6	Vandal Proof	☐
-7	Trap Primer Tapping	☐
-8	Backwater Valve (2, 3, 4" Only)	☐
-9	Hinged Grate	☐
-13	All Galvanized	☐
-21	Secondary Strainer	☐
-34	Closure Plug	☐
-F4-50	4" Round Cast Iron Funnel	☐
-F4-1	4" Round Nickel Bronze Funnel	☐
-F6-1	6" Round Nickel Bronze Funnel	☐
-G-50	4"x9" Oval Cast Iron Funnel	☐
-G-1	4"x9" Oval Nickel Bronze Funnel	☐
-SO	Side Outlet (2, 3, 4" Only)	☐
-Z	Elastomeric Flange	☐

Optional Body Material

Suffix	Description	
-60	PVC Body (2, 3, 4, 6" Only)	☐
-61	ABS Body (2, 3, 4" Only)	☐

Load Rating & Free Area

Load Rating	Free Area Sq. In.
*XHD	57

* The load classifications are in accordance with the American National Standards ASME A112.21.1M
ASME Ratings are as follows
XHD - Safe Live Load 7500-10000 lbs.(3375-4500kg)
The above categories are given as a guide only
Please consult factory

Job Name _____ Contractor _____

Job Location _____ Contractor's P O No. _____

Engineer _____ Representative _____

WATTS Drainage reserves the right to modify or change product design or construction without prior notice and without incurring any obligation to make similar changes and modifications to products previously or subsequently sold See your WATTS Drainage representative for any clarification Dimensions are subject to manufacturing tolerances

WATTS®
Specification Drainage Products
USA: 100 Watts Road, Spindale, NC, 28160-2298: TEL 828-288-2179 TOLL-FREE. 1-800-338-2581 www.watts.com

17

WATTS®

Save To Disk
Print
Close (x)

18

GRATING CAPACITIES FOR TYPE DOUBLE "A", "C," AND "D"

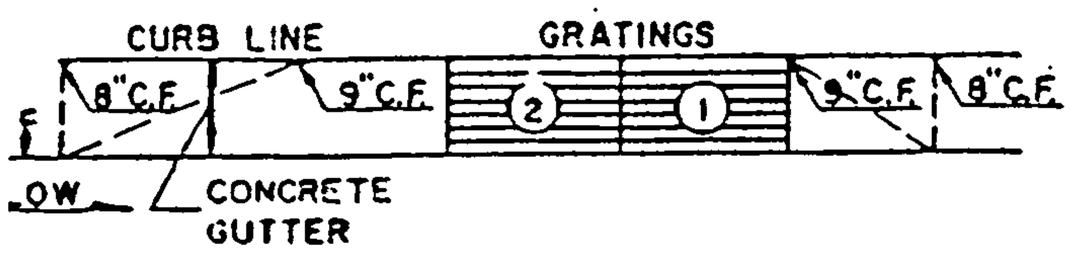

GRATING & GUTTER PLAN

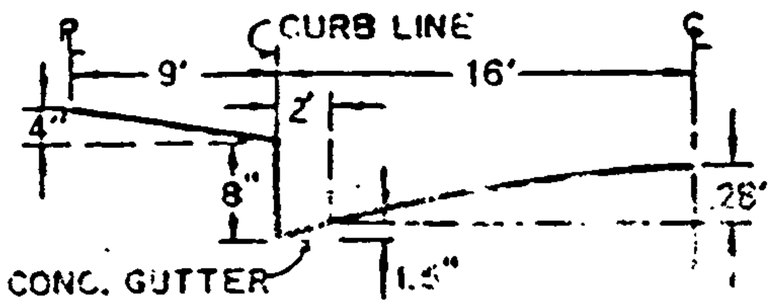

TYPICAL HALF STREET SECTION
(ABOVE BASIN)

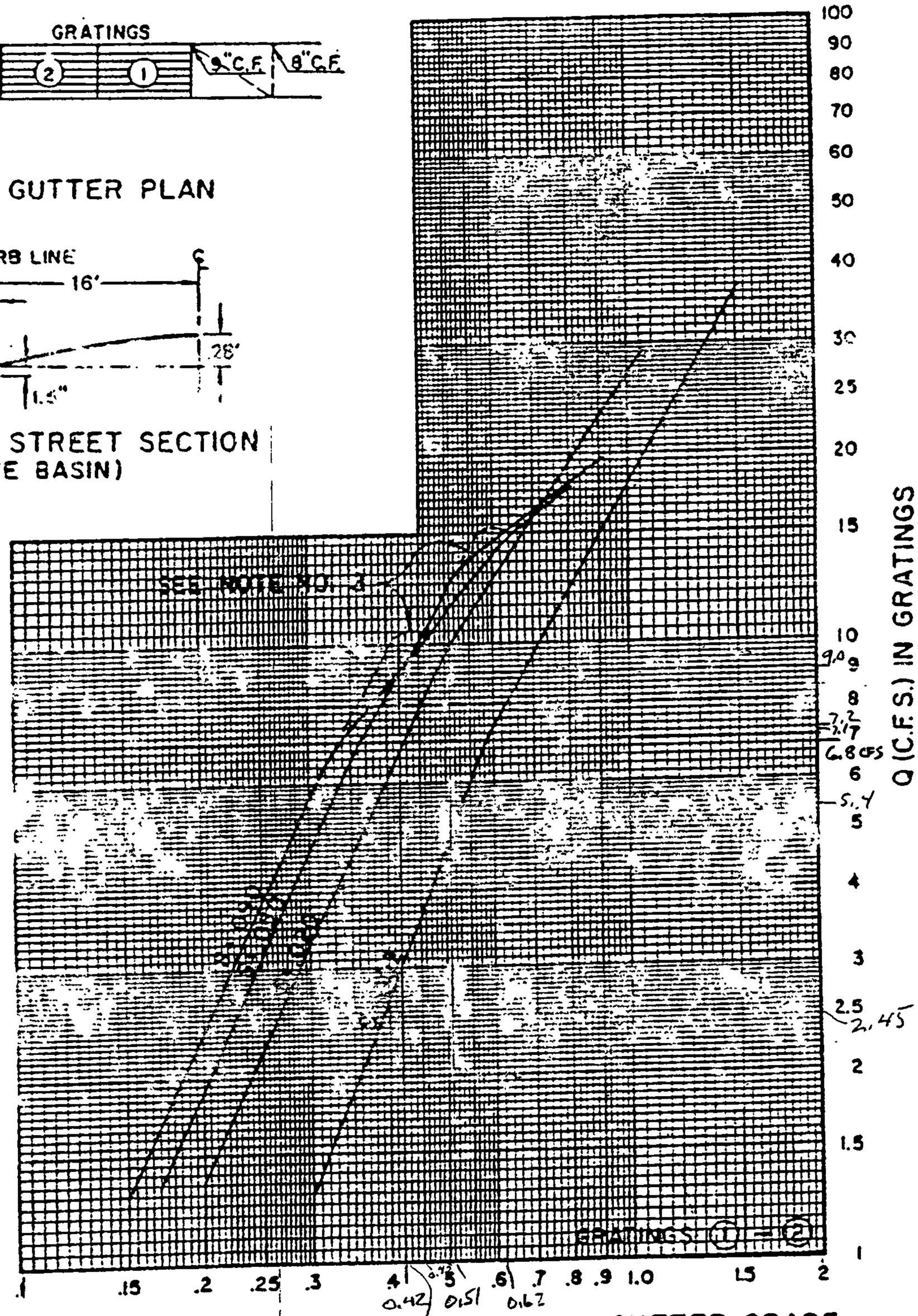

19

GRATING CAPACITIES FOR TYPE "A", "C" and "D".

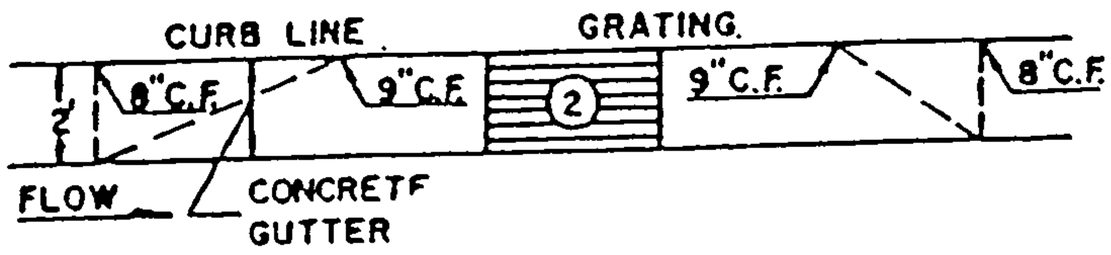

GRATING & GUTTER PLAN

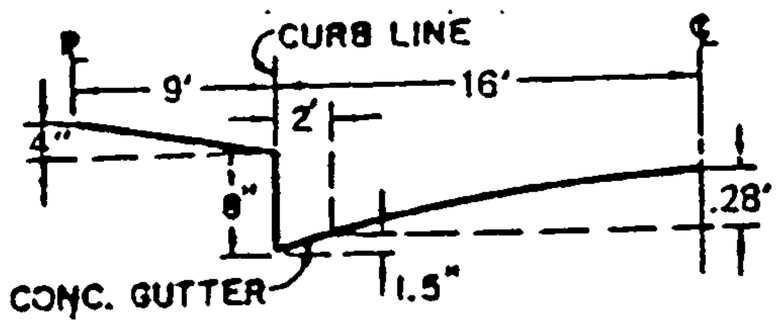

TYPICAL HALF STREET SECTION
(ABOVE BASIN)

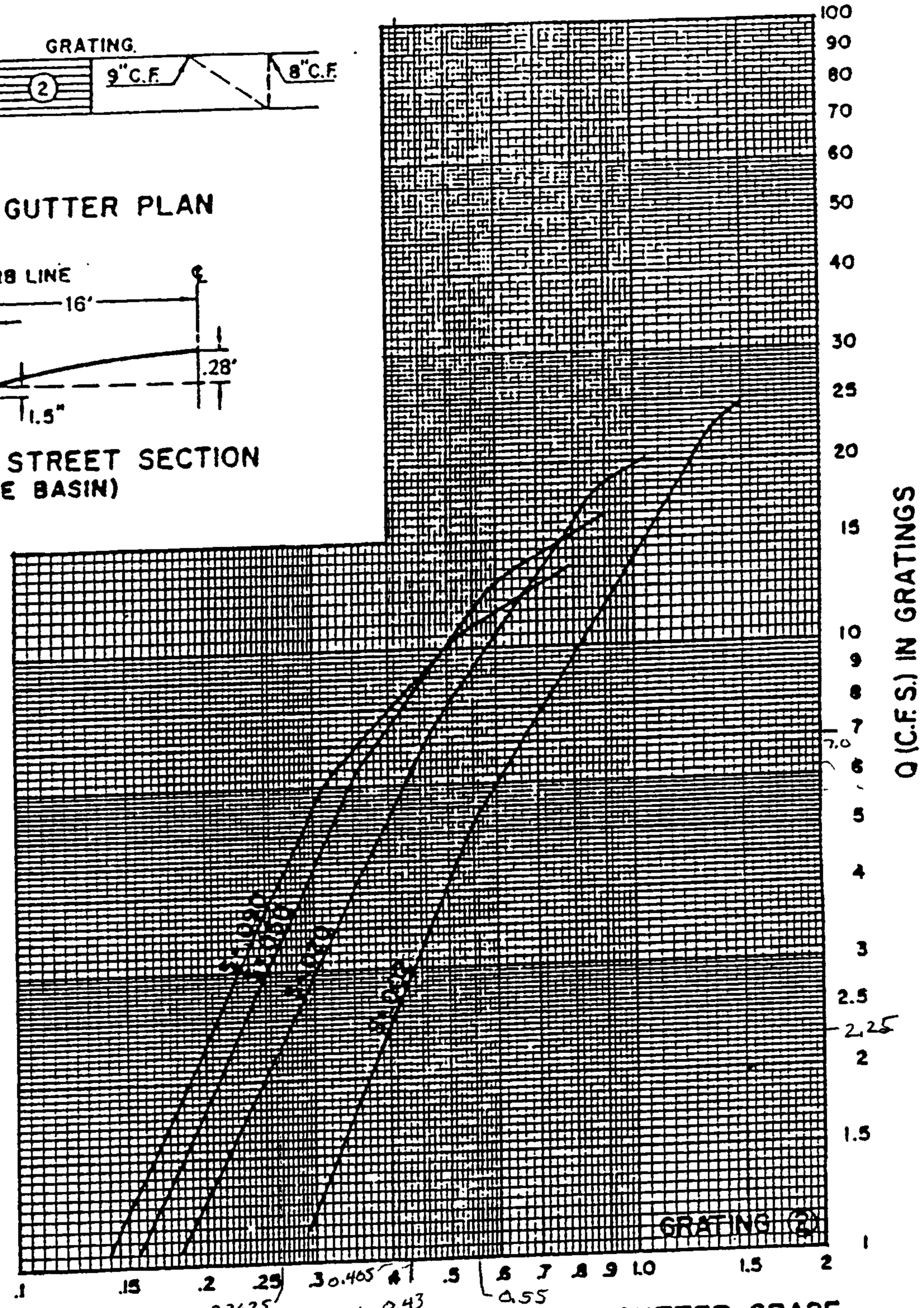

GRATING CAPACITIES FOR TYPE "B"

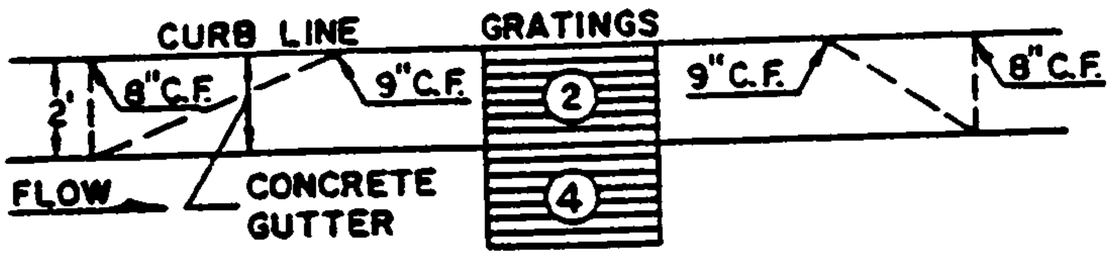

GRATING & GUTTER PLAN

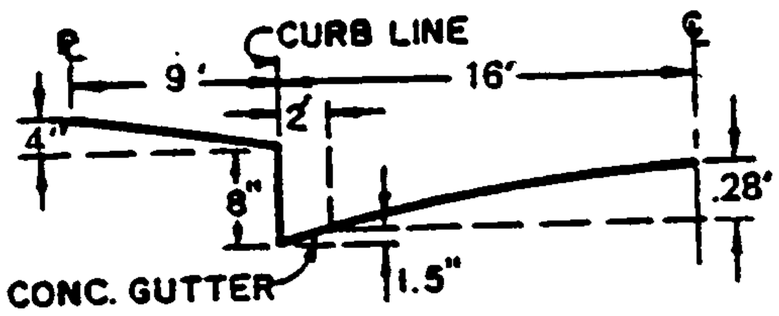

TYPICAL HALF STREET SECTION
(ABOVE BASIN)

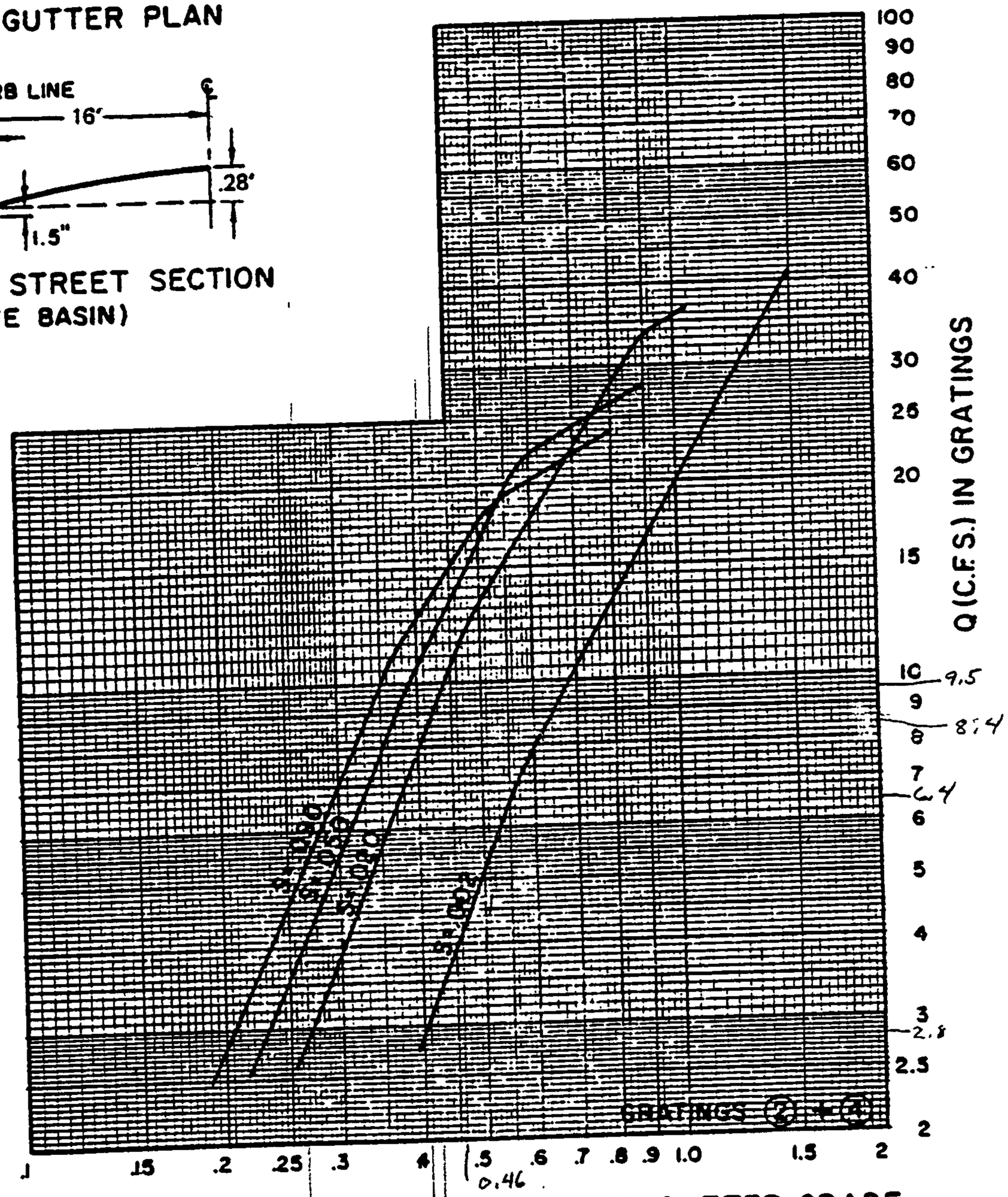

21

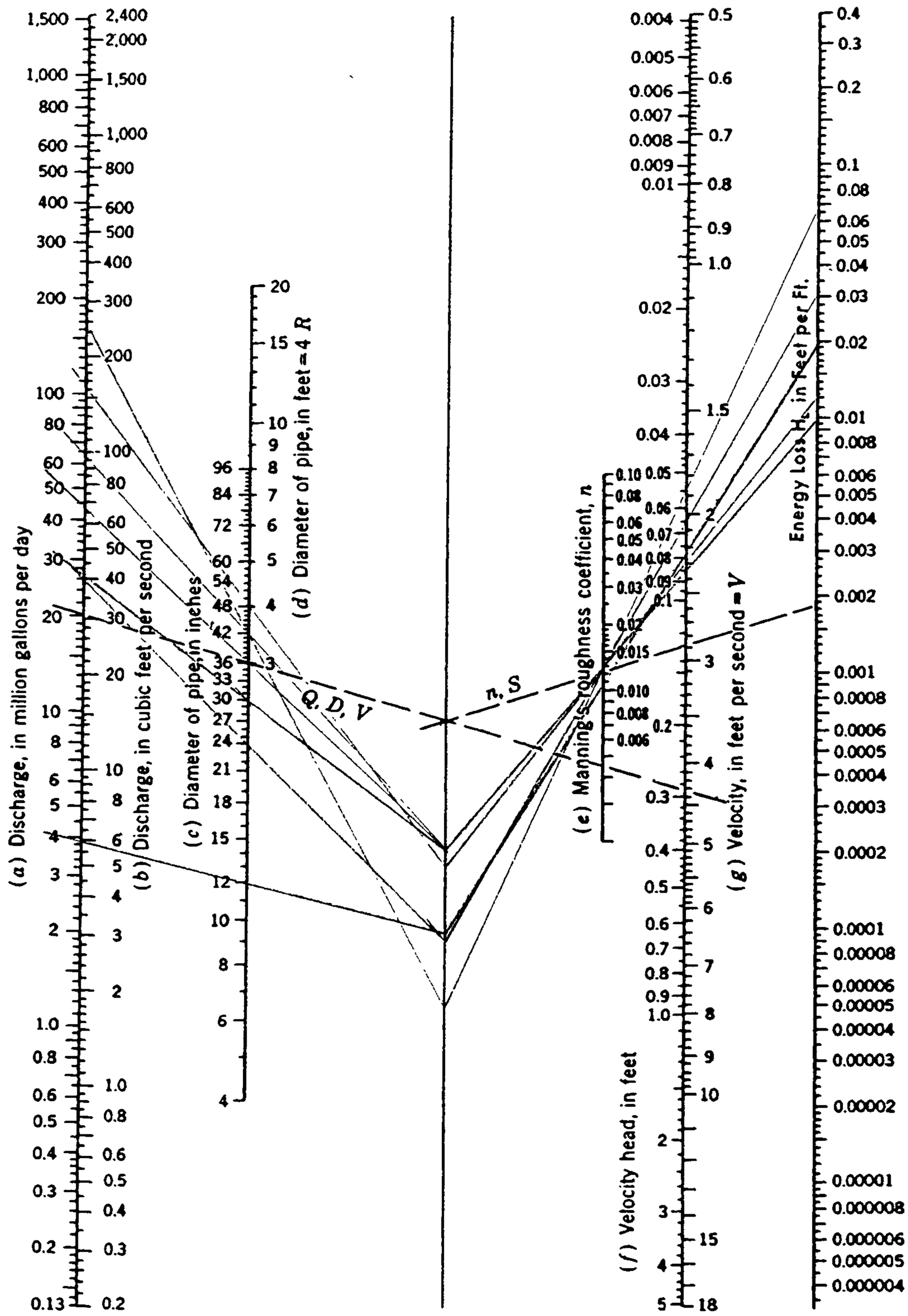

Alignment chart for energy loss in pipes, for Manning's formula.
Note: Use chart for flow computations, $H_L = S$

Figure 3-29a Nomograph for solution of Manning's formula.

```
START                  TIME=0.0
***** HYDROGRAPH FOR VOLTERRA
RAINFALL               TYPE=1 RAIN QUARTER=0.0 IN
                       RAIN ONE=2.05 IN RAIN SIX=2.60 IN
                       RAIN DAY=3.20 IN DT=0.03333 HR
***** RESIDENTIAL
COMPUTE NM HYD         ID=1 HYD NO=101.1 AREA=0.032620 SQ MI
                       PER A=0 B=19.69 C=13 D=67.31
                       TP=0.1333 HR MASS RAINFALL=-1
PRINT HYD              ID=1 CODE=1
***** BASIN COMMERCIAL
COMPUTE NM HYD         ID=2 HYD NO=102.1 AREA=0.004146 SQ MI
                       PER A=0 B=9.04 C=9.04 D=81.92
                       TP=0.1333 HR MASS RAINFALL=-1
PRINT HYD              ID=2 CODE=1
***** BASIN FUTURE PARKING
COMPUTE NM HYD         ID=3 HYD NO=103.1 AREA=0.003328 SQ MI
                       PER A=0 B=10 C=53.2 D=36.8
                       TP=0.1333 HR MASS RAINFALL=-1
PRINT HYD              ID=3 CODE=1
FINISH
```

```
AHYMO PROGRAM (AHYMO_97) -                          - Version:  1997.02d
     RUN DATE (MON/DAY/YR) = 03/31/2009
     START TIME (HR:MIN:SEC) = 13:07:35     USER NO.= AHYMO-I-9702dGoodwinM-AH
     INPUT FILE = vol.dat

START                TIME=0.0
***** HYDROGRAPH FOR VOLTERRA
RAINFALL             TYPE=1 RAIN QUARTER=0.0 IN
                     RAIN ONE=2.05 IN RAIN SIX=2.60 IN
                     RAIN DAY=3.20 IN DT=0.03333 HR

                COMPUTED 6-HOUR RAINFALL DISTRIBUTION BASED ON NOAA ATLAS 2 - PEAK
AT 1.40 HR.
                DT =    .033330 HOURS       END TIME =     5.999400 HOURS
                   .0000   .0040   .0081   .0123   .0166   .0210   .0255
                   .0300   .0347   .0395   .0444   .0494   .0546   .0599
                   .0653   .0709   .0767   .0826   .0887   .0951   .1016
                   .1084   .1154   .1227   .1302   .1381   .1464   .1550
                   .1641   .1736   .1837   .1893   .1954   .2019   .2158
                   .2469   .2947   .3635   .4573   .5807   .7380   .9338
                  1.1728  1.3946  1.4873  1.5655  1.6351  1.6984  1.7566
                  1.8107  1.8613  1.9087  1.9533  1.9953  2.0351  2.0727
                  2.1083  2.1421  2.1742  2.2046  2.2335  2.2411  2.2482
                  2.2550  2.2615  2.2678  2.2738  2.2797  2.2854  2.2909
                  2.2962  2.3015  2.3065  2.3115  2.3163  2.3210  2.3257
                  2.3302  2.3346  2.3389  2.3432  2.3474  2.3515  2.3555
                  2.3595  2.3634  2.3672  2.3710  2.3747  2.3783  2.3819
                  2.3855  2.3890  2.3925  2.3959  2.3992  2.4026  2.4058
                  2.4091  2.4123  2.4154  2.4186  2.4217  2.4247  2.4277
                  2.4307  2.4337  2.4366  2.4395  2.4424  2.4453  2.4481
                  2.4509  2.4536  2.4564  2.4591  2.4618  2.4644  2.4671
                  2.4697  2.4723  2.4749  2.4774  2.4800  2.4825  2.4850
                  2.4874  2.4899  2.4923  2.4948  2.4972  2.4995  2.5019
                  2.5043  2.5066  2.5089  2.5112  2.5135  2.5158  2.5180
                  2.5202  2.5225  2.5247  2.5269  2.5291  2.5312  2.5334
                  2.5355  2.5377  2.5398  2.5419  2.5440  2.5460  2.5481
                  2.5502  2.5522  2.5542  2.5563  2.5583  2.5603  2.5623
                  2.5642  2.5662  2.5682  2.5701  2.5720  2.5740  2.5759
                  2.5778  2.5797  2.5816  2.5835  2.5853  2.5872  2.5890
                  2.5909  2.5927  2.5945  2.5964  2.5982  2.6000

***** RESIDENTIAL
COMPUTE NM HYD       ID=1 HYD NO=101.1 AREA=0.032620 SQ MI
                     PER A=0 B=19.69 C=13 D=67.31
                     TP=0.1333 HR MASS RAINFALL=-1

          K =   .072649HR    TP =   .133300HR    K/TP RATIO =   .545000     SHAPE
CONSTANT, N =  7.106420
          UNIT PEAK =   86.686    CFS   UNIT VOLUME =    .9992       B =   526.28
P60 = 2.0500
          AREA =      .021957 SQ MI    IA =    .10000 INCHES    INF =    .04000 INCHES
PER HOUR
          RUNOFF COMPUTED BY INITIAL ABSTRACTION/INFILTRATION NUMBER METHOD - DT =
.033330


          K =   .122758HR    TP =   .133300HR    K/TP RATIO =   .920918     SHAPE
CONSTANT, N =  3.843339
          UNIT PEAK =   27.566    CFS   UNIT VOLUME =    .9999       B =   344.59
P60 = 2.0500
          AREA =      .010663 SQ MI    IA =    .44035 INCHES    INF =   1.08298 INCHES
PER HOUR
          RUNOFF COMPUTED BY INITIAL ABSTRACTION/INFILTRATION NUMBER METHOD - DT =
```

```
.033330

     PRINT HYD            ID=1 CODE=1

                                        PARTIAL HYDROGRAPH   101.10

         RUNOFF VOLUME =      1.91067 INCHES      =        3.3240 ACRE-FEET
         PEAK DISCHARGE RATE =       87.06 CFS  AT   1.500 HOURS   BASIN AREA =   .0326
SQ. MI.


     ***** BASIN COMMERCIAL
     COMPUTE NM HYD       ID=2 HYD NO=102.1 AREA=0.004146 SQ MI
                          PER A=0 B=9.04 C=9.04 D=81.92
                          TP=0.1333 HR MASS RAINFALL=-1

         K =    .072649HR    TP =    .133300HR    K/TP RATIO =    .545000     SHAPE
CONSTANT, N =  7.106420
         UNIT PEAK =   13.409    CFS   UNIT VOLUME =    .9985       B =   526.28
P60 = 2.0500
         AREA =       .003396 SQ MI    IA =    .10000 INCHES    INF =    .04000 INCHES
PER HOUR
         RUNOFF COMPUTED BY INITIAL ABSTRACTION/INFILTRATION NUMBER METHOD - DT =
.033330


         K =    .120234HR    TP =    .133300HR    K/TP RATIO =    .901978     SHAPE
CONSTANT, N =  3.928677
         UNIT PEAK =   1.9704    CFS   UNIT VOLUME =    .9939       B =   350.39
P60 = 2.0500
         AREA =       .000750 SQ MI    IA =    .42500 INCHES    INF =   1.04000 INCHES
PER HOUR
         RUNOFF COMPUTED BY INITIAL ABSTRACTION/INFILTRATION NUMBER METHOD - DT =
.033330

     PRINT HYD            ID=2 CODE=1

                                        PARTIAL HYDROGRAPH   102.10

         RUNOFF VOLUME =      2.11205 INCHES      =         .4670 ACRE-FEET
         PEAK DISCHARGE RATE =       11.88 CFS  AT   1.500 HOURS   BASIN AREA =   .0041
SQ. MI.


     ***** BASIN FUTURE PARKING
     COMPUTE NM HYD       ID=3 HYD NO=103.1 AREA=0.003328 SQ MI
                          PER A=0 B=10 C=53.2 D=36.8
                          TP=0.1333 HR MASS RAINFALL=-1

         K =    .072649HR    TP =    .133300HR    K/TP RATIO =    .545000     SHAPE
CONSTANT, N =  7.106420
         UNIT PEAK =    4.8352    CFS   UNIT VOLUME =    .9969       B =   526.28
P60 = 2.0500
         AREA =       .001225 SQ MI    IA =    .10000 INCHES    INF =    .04000 INCHES
PER HOUR
         RUNOFF COMPUTED BY INITIAL ABSTRACTION/INFILTRATION NUMBER METHOD - DT =
.033330


         K =    .111801HR    TP =    .133300HR    K/TP RATIO =    .838718     SHAPE
```

```
CONSTANT, N =  4.249460
          UNIT PEAK =   5.8614    CFS   UNIT VOLUME =    .9981       B =   371.47
P60 = 2.0500
          AREA =      .002103 SQ MI    IA =    .37373 INCHES    INF =    .89646 INCHES
PER HOUR
          RUNOFF COMPUTED BY INITIAL ABSTRACTION/INFILTRATION NUMBER METHOD - DT =
.033330

     PRINT HYD            ID=3 CODE=1

                                        PARTIAL HYDROGRAPH   103.10


         RUNOFF VOLUME =     1.60744 INCHES     =        .2853 ACRE-FEET
         PEAK DISCHARGE RATE =       8.12 CFS  AT   1.500 HOURS   BASIN AREA =   .0033
SQ. MI.


     FINISH

          NORMAL PROGRAM FINISH          END TIME (HR:MIN:SEC) = 13:07:35
```

```
START                    TIME=0.0
***** HYDROGRAPH FOR VOLTERRA OPEN SPACE
RAINFALL                 TYPE=1 RAIN QUARTER=0.0 IN
                         RAIN ONE=2.05 IN RAIN SIX=2.60 IN
                         RAIN DAY=3.20 IN DT=0.03333 HR
***** OPEN SPACE AREA SB 11
COMPUTE NM HYD           ID=1 HYD NO=101 AREA=0.001289 SQ MI
                         PER A=100 B=0 C=0 D=0
                         TP=0.1333 HR MASS RAINFALL=-1
PRINT HYD                ID=1 CODE=1
***** OPEN SPACE AREA SB 2
COMPUTE NM HYD           ID=2 HYD NO=102 AREA=0.00314 SQ MI
                         PER A=0 B=0 C=100 D=0
                         TP=0.1333 HR MASS RAINFALL=-1
PRINT HYD                ID=2 CODE=1
***** OPEN SPACE AREA SB 3
COMPUTE NM HYD           ID=3 HYD NO=103 AREA=0.00163 SQ MI
                         PER A=0 B=50 C=50 D=0
                         TP=0.1333 HR MASS RAINFALL=-1
PRINT HYD                ID=3 CODE=1
***** OPEN SPACE AREA SB 4
COMPUTE NM HYD           ID=4 HYD NO=104 AREA=0.00064 SQ MI
                         PER A=0 B=100 C=0 D=0
                         TP=0.1333 HR MASS RAINFALL=-1
PRINT HYD                ID=4 CODE=1
***** OPEN SPACE AREA SB 1
COMPUTE NM HYD           ID=5 HYD NO=105 AREA=0.00401 SQ MI
                         PER A=0 B=40 C=60 D=0
                         TP=0.1333 HR MASS RAINFALL=-1
PRINT HYD                ID=5 CODE=1
***** OPEN SPACE AREA SB 5
COMPUTE NM HYD           ID=6 HYD NO=106 AREA=0.00111 SQ MI
                         PER A=0 B=100 C=0 D=0
                         TP=0.1333 HR MASS RAINFALL=-1
PRINT HYD                ID=6 CODE=1
*
ADD HYD                  ID=7 HYD NO=107  ID=1  ID=2
PRINT HYD                ID=7 CODE=1
*
ADD HYD                  ID=8 HYD NO=108  ID=3  ID=4
PRINT HYD                ID=8 CODE=1
*
ADD HYD                  ID=9 HYD NO=109  ID=5  ID=6
PRINT HYD                ID=9 CODE=1
*
ADD HYD                  ID=10 HYD NO=110  ID=7  ID=8
PRINT HYD                ID=10 CODE=1
*
ADD HYD                  ID=11 HYD NO=111  ID=9  ID=10
PRINT HYD                ID=11 CODE=1
* ROUTING THROUGH POND INTO MONACHOS STORM DRAIN THROUGH A DBL 'D' INLET
*
ROUTE RESERVOIR           ID=12 HYD NO=112  INFLOW ID=11 CODE=10
                          OUTFLOW(CFS)       STORAGE(AC-FT)     ELEVATION(FT)
                             0.0                0.0                 73
                            51.0                0.1292              74
PRINT HYD                 ID=12 CODE=1
*
FINISH
```

```
AHYMO PROGRAM (AHYMO_97) -                                  - Version:  1997.02d
     RUN DATE (MON/DAY/YR) = 03/06/2009
     START TIME (HR:MIN:SEC) = 13:09:49     USER NO.= AHYMO-I-
9702dGoodwinM-AH
     INPUT FILE = volopend.dat

START                TIME=0.0
***** HYDROGRAPH FOR VOLTERRA OPEN SPACE
RAINFALL             TYPE=1 RAIN QUARTER=0.0 IN
                     RAIN ONE=2.05 IN RAIN SIX=2.60 IN
                     RAIN DAY=3.20 IN DT=0.03333 HR

          COMPUTED 6-HOUR RAINFALL DISTRIBUTION BASED ON NOAA ATLAS 2 -
PEAK AT 1.40 HR.
          DT =    .033330 HOURS       END TIME =     5.999400 HOURS
             .0000   .0040   .0081   .0123   .0166   .0210   .0255
             .0300   .0347   .0395   .0444   .0494   .0546   .0599
             .0653   .0709   .0767   .0826   .0887   .0951   .1016
             .1084   .1154   .1227   .1302   .1381   .1464   .1550
             .1641   .1736   .1837   .1893   .1954   .2019   .2158
             .2469   .2947   .3635   .4573   .5807   .7380   .9338
            1.1728  1.3946  1.4873  1.5655  1.6351  1.6984  1.7566
            1.8107  1.8613  1.9087  1.9533  1.9953  2.0351  2.0727
            2.1083  2.1421  2.1742  2.2046  2.2335  2.2411  2.2482
            2.2550  2.2615  2.2678  2.2738  2.2797  2.2854  2.2909
            2.2962  2.3015  2.3065  2.3115  2.3163  2.3210  2.3257
            2.3302  2.3346  2.3389  2.3432  2.3474  2.3515  2.3555
            2.3595  2.3634  2.3672  2.3710  2.3747  2.3783  2.3819
            2.3855  2.3890  2.3925  2.3959  2.3992  2.4026  2.4058
            2.4091  2.4123  2.4154  2.4186  2.4217  2.4247  2.4277
            2.4307  2.4337  2.4366  2.4395  2.4424  2.4453  2.4481
            2.4509  2.4536  2.4564  2.4591  2.4618  2.4644  2.4671
            2.4697  2.4723  2.4749  2.4774  2.4800  2.4825  2.4850
            2.4874  2.4899  2.4923  2.4948  2.4972  2.4995  2.5019
            2.5043  2.5066  2.5089  2.5112  2.5135  2.5158  2.5180
            2.5202  2.5225  2.5247  2.5269  2.5291  2.5312  2.5334
            2.5355  2.5377  2.5398  2.5419  2.5440  2.5460  2.5481
            2.5502  2.5522  2.5542  2.5563  2.5583  2.5603  2.5623
            2.5642  2.5662  2.5682  2.5701  2.5720  2.5740  2.5759
            2.5778  2.5797  2.5816  2.5835  2.5853  2.5872  2.5890
            2.5909  2.5927  2.5945  2.5964  2.5982  2.6000

***** OPEN SPACE AREA SB 11
COMPUTE NM HYD       ID=1 HYD NO=101 AREA=0.001289 SQ MI
                     PER A=100 B=0 C=0 D=0
                     TP=0.1333 HR MASS RAINFALL=-1

          K =   .159146HR    TP =   .133300HR    K/TP RATIO =  1.193894     SHAPE
CONSTANT, N =  2.975114
          UNIT PEAK =   2.7055    CFS   UNIT VOLUME =    .9946       B =   279.79
P60 = 2.0500
          AREA =      .001289 SQ MI    IA =    .65000 INCHES    INF =   1.67000
INCHES PER HOUR
          RUNOFF COMPUTED BY INITIAL ABSTRACTION/INFILTRATION NUMBER METHOD - DT =
.033330

PRINT HYD            ID=1 CODE=1

                                        PARTIAL HYDROGRAPH   101.00


        RUNOFF VOLUME =       .63017 INCHES     =        .0433 ACRE-FEET
        PEAK DISCHARGE RATE =       1.49 CFS  AT   1.500 HOURS   BASIN AREA =
.0013 SQ. MI.
```

```
***** OPEN SPACE AREA SB 2
COMPUTE NM HYD       ID=2 HYD NO=102 AREA=0.00314 SQ MI
                     PER A=0 B=0 C=100 D=0
                     TP=0.1333 HR MASS RAINFALL=-1

        K =   .107897HR    TP =   .133300HR    K/TP RATIO =   .809431     SHAPE
CONSTANT, N =  4.419714
        UNIT PEAK =   9.0041    CFS   UNIT VOLUME =    .9990       B =   382.25
P60 = 2.0500
        AREA =      .003140 SQ MI    IA =    .35000 INCHES    INF =    .83000
INCHES PER HOUR
        RUNOFF COMPUTED BY INITIAL ABSTRACTION/INFILTRATION NUMBER METHOD - DT =
.033330

PRINT HYD            ID=2 CODE=1

                                        PARTIAL HYDROGRAPH   102.00

        RUNOFF VOLUME =     1.24180 INCHES     =         .2080 ACRE-FEET
        PEAK DISCHARGE RATE =       6.74 CFS  AT   1.500 HOURS   BASIN AREA =
.0031 SQ. MI.


***** OPEN SPACE AREA SB 3
COMPUTE NM HYD       ID=3 HYD NO=103 AREA=0.00163 SQ MI
                     PER A=0 B=50 C=50 D=0
                     TP=0.1333 HR MASS RAINFALL=-1

        K =   .120234HR    TP =   .133300HR    K/TP RATIO =   .901978     SHAPE
CONSTANT, N =  3.928677
        UNIT PEAK =   4.2845    CFS   UNIT VOLUME =    .9973       B =   350.39
P60 = 2.0500
        AREA =      .001630 SQ MI    IA =    .42500 INCHES    INF =   1.04000
INCHES PER HOUR
        RUNOFF COMPUTED BY INITIAL ABSTRACTION/INFILTRATION NUMBER METHOD - DT =
.033330

PRINT HYD            ID=3 CODE=1

                                        PARTIAL HYDROGRAPH   103.00

        RUNOFF VOLUME =     1.04743 INCHES     =         .0911 ACRE-FEET
        PEAK DISCHARGE RATE =       3.07 CFS  AT   1.500 HOURS   BASIN AREA =
.0016 SQ. MI.


***** OPEN SPACE AREA SB 4
COMPUTE NM HYD       ID=4 HYD NO=104 AREA=0.00064 SQ MI
                     PER A=0 B=100 C=0 D=0
                     TP=0.1333 HR MASS RAINFALL=-1

        K =   .132570HR    TP =   .133300HR    K/TP RATIO =   .994525     SHAPE
CONSTANT, N =  3.549967
        UNIT PEAK =   1.5554    CFS   UNIT VOLUME =    .9914       B =   323.96
P60 = 2.0500
        AREA =      .000640 SQ MI    IA =    .50000 INCHES    INF =   1.25000
INCHES PER HOUR
        RUNOFF COMPUTED BY INITIAL ABSTRACTION/INFILTRATION NUMBER METHOD - DT =
.033330
```

```
     PRINT HYD            ID=4 CODE=1

                                        PARTIAL HYDROGRAPH   104.00

         RUNOFF VOLUME =       .88478 INCHES     =         .0302 ACRE-FEET
         PEAK DISCHARGE RATE =       1.05 CFS  AT   1.500 HOURS   BASIN AREA =
.0006 SQ. MI.


     ***** OPEN SPACE AREA SB 1
     COMPUTE NM HYD       ID=5 HYD NO=105 AREA=0.00401 SQ MI
                          PER A=0 B=40 C=60 D=0
                          TP=0.1333 HR MASS RAINFALL=-1

          K =   .117766HR    TP =   .133300HR    K/TP RATIO =   .883469     SHAPE
CONSTANT, N =  4.016546
          UNIT PEAK =   10.718    CFS   UNIT VOLUME =    .9992       B =   356.27
P60 = 2.0500
          AREA =      .004010 SQ MI    IA =    .41000 INCHES    INF =    .99800
INCHES PER HOUR
           RUNOFF COMPUTED BY INITIAL ABSTRACTION/INFILTRATION NUMBER METHOD - DT =
.033330

     PRINT HYD            ID=5 CODE=1

                                        PARTIAL HYDROGRAPH   105.00

         RUNOFF VOLUME =     1.08332 INCHES     =         .2317 ACRE-FEET
         PEAK DISCHARGE RATE =       7.74 CFS  AT   1.500 HOURS   BASIN AREA =
.0040 SQ. MI.


     ***** OPEN SPACE AREA SB 5
     COMPUTE NM HYD       ID=6 HYD NO=106 AREA=0.00111 SQ MI
                          PER A=0 B=100 C=0 D=0
                          TP=0.1333 HR MASS RAINFALL=-1

          K =   .132570HR    TP =   .133300HR    K/TP RATIO =   .994525     SHAPE
CONSTANT, N =  3.549967
          UNIT PEAK =   2.6976    CFS   UNIT VOLUME =    .9954       B =   323.96
P60 = 2.0500
          AREA =      .001110 SQ MI    IA =    .50000 INCHES    INF =   1.25000
INCHES PER HOUR
           RUNOFF COMPUTED BY INITIAL ABSTRACTION/INFILTRATION NUMBER METHOD - DT =
.033330

     PRINT HYD            ID=6 CODE=1

                                        PARTIAL HYDROGRAPH   106.00

         RUNOFF VOLUME =       .88478 INCHES     =         .0524 ACRE-FEET
         PEAK DISCHARGE RATE =       1.81 CFS  AT   1.500 HOURS   BASIN AREA =
.0011 SQ. MI.


     *
     ADD HYD              ID=7 HYD NO=107  ID=1  ID=2
     PRINT HYD            ID=7 CODE=1

                                        PARTIAL HYDROGRAPH   107.00
```

```
        RUNOFF VOLUME =      1.06374 INCHES      =         .2513 ACRE-FEET
        PEAK DISCHARGE RATE =        8.23 CFS  AT   1.500 HOURS   BASIN AREA =
.0044 SQ. MI.


    *
    ADD HYD              ID=8 HYD NO=108  ID=3  ID=4
    PRINT HYD            ID=8 CODE=1

                                      PARTIAL HYDROGRAPH   108.00


        RUNOFF VOLUME =      1.00147 INCHES      =         .1212 ACRE-FEET
        PEAK DISCHARGE RATE =        4.11 CFS  AT   1.500 HOURS   BASIN AREA =
.0023 SQ. MI.


    *
    ADD HYD              ID=9 HYD NO=109  ID=5  ID=6
    PRINT HYD            ID=9 CODE=1

                                      PARTIAL HYDROGRAPH   109.00


        RUNOFF VOLUME =      1.04024 INCHES      =         .2841 ACRE-FEET
        PEAK DISCHARGE RATE =        9.55 CFS  AT   1.500 HOURS   BASIN AREA =
.0051 SQ. MI.


    *
    ADD HYD              ID=10 HYD NO=110  ID=7  ID=8
    PRINT HYD            ID=10 CODE=1

                                      PARTIAL HYDROGRAPH   110.00


        RUNOFF VOLUME =      1.04264 INCHES      =         .3725 ACRE-FEET
        PEAK DISCHARGE RATE =       12.35 CFS  AT   1.500 HOURS   BASIN AREA =
.0067 SQ. MI.


    *
    ADD HYD              ID=11 HYD NO=111  ID=9  ID=10
    PRINT HYD            ID=11 CODE=1

                                      PARTIAL HYDROGRAPH   111.00


        RUNOFF VOLUME =      1.04160 INCHES      =         .6566 ACRE-FEET
        PEAK DISCHARGE RATE =       21.89 CFS  AT   1.500 HOURS   BASIN AREA =
.0118 SQ. MI.


    * ROUTING THROUGH POND INTO MONACHOS STORM DRAIN THROUGH A DBL 'D' INLET
    *
    ROUTE RESERVOIR      ID=12 HYD NO=112  INFLOW ID=11 CODE=10
                         OUTFLOW(CFS)       STORAGE(AC-FT)     ELEVATION(FT)
                            0.0                0.0                 73
                           51.0                0.1292              74
```

```
* * * * * * * * * * * * * * * * *

  TIME       INFLOW     ELEV       VOLUME     OUTFLOW
  (HRS)      (CFS)      (FEET)     (AC-FT)    (CFS)

   .00         .00      73.00        .000        .00
   .33         .00      73.00        .000        .00
   .67         .00      73.00        .000        .00
  1.00         .00      73.00        .000        .00
  1.33        2.86      73.03        .004       1.46
  1.67       11.92      73.28        .036      14.03
  2.00        2.63      73.06        .008       3.02
  2.33         .83      73.02        .002        .91
  2.67         .33      73.01        .001        .36
  3.00         .13      73.00        .000        .14
  3.33         .03      73.00        .000        .04
  3.67         .00      73.00        .000        .00
PEAK DISCHARGE =        20.981 CFS - PEAK OCCURS AT HOUR    1.53
MAXIMUM WATER SURFACE ELEVATION =        73.411
MAXIMUM STORAGE =          .0532 AC-FT       INCREMENTAL TIME=     .033330HRS

PRINT HYD              ID=12 CODE=1

                                        PARTIAL HYDROGRAPH   112.00


     RUNOFF VOLUME =      1.04160 INCHES      =         .6566 ACRE-FEET
     PEAK DISCHARGE RATE =       20.98 CFS  AT   1.533 HOURS   BASIN AREA =
.0118 SQ. MI.


*
FINISH

     NORMAL PROGRAM FINISH          END TIME (HR:MIN:SEC) = 13:09:49
```

```
START                  TIME=0.0
***** HYDROGRAPH FOR VOLTERRA COURTYARDS
RAINFALL               TYPE=1 RAIN QUARTER=0.0 IN
                       RAIN ONE=2.05 IN RAIN SIX=2.60 IN
                       RAIN DAY=3.20 IN DT=0.03333 HR
***** COURTYARDS TO MONACHOS
COMPUTE NM HYD         ID=1 HYD NO=101.1 AREA=0.000256 SQ MI
                       PER A=0 B=0 C=0 D=100
                       TP=0.1333 HR MASS RAINFALL=-1
PRINT HYD              ID=1 CODE=1
***** COURTYARDS TO CAVALCADE
COMPUTE NM HYD         ID=2 HYD NO=102.1 AREA=0.000227 SQ MI
                       PER A=0 B=0 C=0 D=100
                       TP=0.1333 HR MASS RAINFALL=-1
PRINT HYD              ID=2 CODE=1
***** COURTYARDS TO JUAN TABO
COMPUTE NM HYD         ID=3 HYD NO=103.1 AREA=0.000203 SQ MI
                       PER A=0 B=0 C=0 D=100
                       TP=0.1333 HR MASS RAINFALL=-1
PRINT HYD              ID=3 CODE=1
FINISH
```

```
AHYMO PROGRAM (AHYMO_97) -                                  - Version:  1997.02d
     RUN DATE (MON/DAY/YR) = 03/27/2009
     START TIME (HR:MIN:SEC) = 09:49:41     USER NO.= AHYMO-I-
9702dGoodwinM-AH
     INPUT FILE = VOLCTYD.DAT

START                TIME=0.0
***** HYDROGRAPH FOR VOLTERRA COURTYARDS
RAINFALL             TYPE=1 RAIN QUARTER=0.0 IN
                     RAIN ONE=2.05 IN RAIN SIX=2.60 IN
                     RAIN DAY=3.20 IN DT=0.03333 HR

                COMPUTED 6-HOUR RAINFALL DISTRIBUTION BASED ON NOAA ATLAS 2 -
PEAK AT 1.40 HR.
                DT =    .033330 HOURS       END TIME =     5.999400 HOURS
                   .0000   .0040   .0081   .0123   .0166   .0210   .0255
                   .0300   .0347   .0395   .0444   .0494   .0546   .0599
                   .0653   .0709   .0767   .0826   .0887   .0951   .1016
                   .1084   .1154   .1227   .1302   .1381   .1464   .1550
                   .1641   .1736   .1837   .1893   .1954   .2019   .2158
                   .2469   .2947   .3635   .4573   .5807   .7380   .9338
                  1.1728  1.3946  1.4873  1.5655  1.6351  1.6984  1.7566
                  1.8107  1.8613  1.9087  1.9533  1.9953  2.0351  2.0727
                  2.1083  2.1421  2.1742  2.2046  2.2335  2.2411  2.2482
                  2.2550  2.2615  2.2678  2.2738  2.2797  2.2854  2.2909
                  2.2962  2.3015  2.3065  2.3115  2.3163  2.3210  2.3257
                  2.3302  2.3346  2.3389  2.3432  2.3474  2.3515  2.3555
                  2.3595  2.3634  2.3672  2.3710  2.3747  2.3783  2.3819
                  2.3855  2.3890  2.3925  2.3959  2.3992  2.4026  2.4058
                  2.4091  2.4123  2.4154  2.4186  2.4217  2.4247  2.4277
                  2.4307  2.4337  2.4366  2.4395  2.4424  2.4453  2.4481
                  2.4509  2.4536  2.4564  2.4591  2.4618  2.4644  2.4671
                  2.4697  2.4723  2.4749  2.4774  2.4800  2.4825  2.4850
                  2.4874  2.4899  2.4923  2.4948  2.4972  2.4995  2.5019
                  2.5043  2.5066  2.5089  2.5112  2.5135  2.5158  2.5180
                  2.5202  2.5225  2.5247  2.5269  2.5291  2.5312  2.5334
                  2.5355  2.5377  2.5398  2.5419  2.5440  2.5460  2.5481
                  2.5502  2.5522  2.5542  2.5563  2.5583  2.5603  2.5623
                  2.5642  2.5662  2.5682  2.5701  2.5720  2.5740  2.5759
                  2.5778  2.5797  2.5816  2.5835  2.5853  2.5872  2.5890
                  2.5909  2.5927  2.5945  2.5964  2.5982  2.6000

***** COURTYARDS TO MONACHOS
COMPUTE NM HYD       ID=1 HYD NO=101.1 AREA=0.000256 SQ MI
                     PER A=0 B=0 C=0 D=100
                     TP=0.1333 HR MASS RAINFALL=-1

          K =   .072649HR    TP =   .133300HR    K/TP RATIO =   .545000     SHAPE
CONSTANT, N =  7.106420
          UNIT PEAK =   1.0107    CFS   UNIT VOLUME =    .9881       B =   526.28
P60 = 2.0500
          AREA =      .000256 SQ MI    IA =    .10000 INCHES    INF =    .04000
INCHES PER HOUR
          RUNOFF COMPUTED BY INITIAL ABSTRACTION/INFILTRATION NUMBER METHOD - DT =
.033330

     PRINT HYD           ID=1 CODE=1

                                        PARTIAL HYDROGRAPH   101.10


         RUNOFF VOLUME =     2.34702 INCHES     =        .0320 ACRE-FEET
         PEAK DISCHARGE RATE =        .80 CFS  AT   1.500 HOURS   BASIN AREA =
.0003 SQ. MI.
```

```
     ***** COURTYARDS TO CAVALCADE
     COMPUTE NM HYD       ID=2 HYD NO=102.1 AREA=0.000227 SQ MI
                          PER A=0 B=0 C=0 D=100
                          TP=0.1333 HR MASS RAINFALL=-1

          K =   .072649HR    TP =   .133300HR    K/TP RATIO =   .545000     SHAPE
CONSTANT, N =  7.106420
          UNIT PEAK =   .89621    CFS   UNIT VOLUME =    .9862       B =   526.28
P60 = 2.0500
          AREA =      .000227 SQ MI    IA =    .10000 INCHES    INF =    .04000
INCHES PER HOUR
          RUNOFF COMPUTED BY INITIAL ABSTRACTION/INFILTRATION NUMBER METHOD - DT =
.033330

     PRINT HYD            ID=2 CODE=1

                                        PARTIAL HYDROGRAPH   102.10

          RUNOFF VOLUME =     2.34702 INCHES     =         .0284 ACRE-FEET
          PEAK DISCHARGE RATE =        .71 CFS  AT   1.500 HOURS   BASIN AREA =
.0002 SQ. MI.


     ***** COURTYARDS TO JUAN TABO
     COMPUTE NM HYD       ID=3 HYD NO=103.1 AREA=0.000203 SQ MI
                          PER A=0 B=0 C=0 D=100
                          TP=0.1333 HR MASS RAINFALL=-1

          K =   .072649HR    TP =   .133300HR    K/TP RATIO =   .545000     SHAPE
CONSTANT, N =  7.106420
          UNIT PEAK =   .80145    CFS   UNIT VOLUME =    .9840       B =   526.28
P60 = 2.0500
          AREA =      .000203 SQ MI    IA =    .10000 INCHES    INF =    .04000
INCHES PER HOUR
          RUNOFF COMPUTED BY INITIAL ABSTRACTION/INFILTRATION NUMBER METHOD - DT =
.033330

     PRINT HYD            ID=3 CODE=1

                                        PARTIAL HYDROGRAPH   103.10

          RUNOFF VOLUME =     2.34702 INCHES     =         .0254 ACRE-FEET
          PEAK DISCHARGE RATE =        .63 CFS  AT   1.500 HOURS   BASIN AREA =
.0002 SQ. MI.


     FINISH

          NORMAL PROGRAM FINISH          END TIME (HR:MIN:SEC) = 09:49:41
```

```
T1 Existing Juan Tabo Storm Drain at Cicada & Forego                          0
T2
T3
SO   1000.000  54.730  1                              56.730
R    1129.150  58.500  1       .013                                  .000    .000 1
JX   1133.150  58.500  4  2  3.013    4.100    7.000  58.500  58.500-90.0 45.0    .000
R    1153.210  59.950  4       .013                                  .000    .000 1
JX   1156.210  59.950  6  5   .013    6.100           59.950         90.0      -45.000
R    1202.480  60.880  6       .013                                  .000    .000 1
JX   1206.480  60.980 10  9   .013     .710           61.480         45.0         .000
R    1224.550  61.350 10       .013                                  .000 -90.000 1
R    1306.240  62.990 10       .013                                  .000    .000 1
JX   1310.240  63.090 12 11   .013     .630           64.090         90.0         .000
R    1386.370  64.620 12       .013                                  .000  45.000 1
R    1392.730  64.760 12       .013                                  .000    .000 1
JX   1395.730  65.260 14 13   .013    4.920           65.260         90.0       90.000
R    1406.850  65.480 14       .013                                  .000    .000 1
SH   1406.850  65.480 14                              66.980
CD   1  4   1    .000   2.000     .000  .000  .000   .00
CD   2  4   1    .000   1.500     .000  .000  .000   .00
CD   3  4   1    .000   2.000     .000  .000  .000   .00
CD   4  4   1    .000   1.500     .000  .000  .000   .00
CD   5  4   1    .000   1.500     .000  .000  .000   .00
CD   6  4   1    .000   2.000     .000  .000  .000   .00
CD   7  4   1    .000   1.000     .000  .000  .000   .00
CD   8  4   1    .000   2.000     .000  .000  .000   .00
CD   9  4   1    .000   1.500     .000  .000  .000   .00
CD  10  4   1    .000   2.000     .000  .000  .000   .00
CD  11  4   1    .000   1.000     .000  .000  .000   .00
CD  12  4   1    .000   2.000     .000  .000  .000   .00
CD  13  4   1    .000   1.500     .000  .000  .000   .00
CD  14  4   1    .000   1.500     .000  .000  .000   .00
Q              4.920   .0
```

W S P G W - CIVILDESIGN Version 14.05

Program Package Serial Number: 1454

WATER SURFACE PROFILE LISTING

Existing Juan Tabo Storm Drain at Cicada & Forego

Date: 4-29-2009 Time:10:36:40

Station / L/Elem	Invert Elev / Ch Slope	Depth (FT)	Water Elev	Q (CFS)	Vel (FPS)	Vel Head / SF Ave	Energy Grd.El. / HF	Super Elev / SE Dpth	Critical Depth / Froude N	Flow Top Width / Norm Dp	Height/ Dia.-FT / "N"	Base Wt or I.D. / X-Fall	ZL / ZR	No Wth Prs/Pip / Type Ch
OUTFALL														
1000.000	54.730	1.297	56.027	28.38	13.16	2.69	58.72	.00	1.84	1.91	2.000	.000	.00	1 .0
4.947	.0292					.0276	.14	1.30	2.18	1.27	.013	.00	.00	PIPE
1004.947	54.874	1.299	56.174	28.38	13.13	2.68	58.85	.00	1.84	1.91	2.000	.000	.00	1 .0
58.271	.0292					.0260	1.51	1.30	2.17	1.27	.013	.00	.00	PIPE
1063.218	56.575	1.355	57.930	28.38	12.52	2.43	60.36	.00	1.84	1.87	2.000	.000	.00	1 .0
26.593	.0292					.0231	.62	1.36	2.00	1.27	.013	.00	.00	PIPE
1089.811	57.352	1.415	58.767	28.38	11.94	2.21	60.98	.00	1.84	1.82	2.000	.000	.00	1 .0
15.948	.0292					.0207	.33	1.42	1.84	1.27	.013	.00	.00	PIPE
1105.759	57.817	1.480	59.297	28.38	11.38	2.01	61.31	.00	1.84	1.75	2.000	.000	.00	1 .0
10.483	.0292					.0185	.19	1.48	1.68	1.27	.013	.00	.00	PIPE
1116.242	58.123	1.551	59.674	28.38	10.85	1.83	61.50	.00	1.84	1.67	2.000	.000	.00	1 .0
6.986	.0292					.0167	.12	1.55	1.53	1.27	.013	.00	.00	PIPE
1123.228	58.327	1.630	59.957	28.38	10.35	1.66	61.62	.00	1.84	1.55	2.000	.000	.00	1 .0
4.299	.0292					.0152	.07	1.63	1.37	1.27	.013	.00	.00	PIPE
1127.527	58.453	1.721	60.174	28.38	9.86	1.51	61.68	.00	1.84	1.39	2.000	.000	.00	1 .0
1.623	.0292					.0141	.02	1.72	1.21	1.27	.013	.00	.00	PIPE
1129.150	58.500	1.835	60.335	28.38	9.40	1.37	61.71	.00	1.84	1.10	2.000	.000	.00	1 .0
EXIST MH JUNCT STR	.0000					.0204	.08	1.84	1.00		.013	.00	.00	PIPE

RIM = 67.13

36

W S P G W - CIVILDESIGN Version 14.05

Program Package Serial Number: 1454

WATER SURFACE PROFILE LISTING

Existing Juan Tabo Storm Drain at Cicada & Forego

Date: 4-29-2009 Time:10:36:40

	Station / L/Elem	Invert Elev / Ch Slope	Depth (FT)	Water Elev	Q (CFS)	Vel (FPS)	Vel Head / SF Ave	Energy Grd.El. / HF	Super Elev / SE Dpth	Critical Depth / Froude N	Flow Top Width / Norm Dp	Height/ Dia.-FT / "N"	Base Wt or I.D. / X-Fall	ZL / ZR	No Wth Prs/Pip / Type Ch
	1133.150	58.500	3.044	61.544	17.28	9.78	1.48	63.03	.00	1.44	.00	1.500	.000	.00	1 .0
	20.060	.0723					.0271	.54	3.04	.00	.85	.013	.00	.00	PIPE
EXIST INLET	1153.210	59.950	2.211	62.161	17.28	9.78	1.48	63.65	.00	1.44	.00	1.500	.000	.00	1 .0
	JUNCT STR	.0000					.0148	.04	.00	.00		.013	.00	.00	PIPE
GRATE=66.19	1156.210	59.950	3.890	63.840	11.18	3.56	.20	64.04	.00	1.20	.00	2.000	.000	.00	1 .0
	46.270	.0201					.0024	.11	3.89	.00	.81	.013	.00	.00	PIPE
MH	1202.480	60.880	3.082	63.962	11.18	3.56	.20	64.16	.00	1.20	.00	2.000	.000	.00	1 .0
	JUNCT STR	.0250					.0023	.01	3.08	.00		.013	.00	.00	PIPE
RIM=67.38	1206.480	60.980	3.038	64.018	10.47	3.33	.17	64.19	.00	1.16	.00	2.000	.000	.00	1 .0
	18.070	.0205					.0021	.04	3.04	.00	.78	.013	.00	.00	PIPE
MH	1224.550	61.350	2.766	64.116	10.47	3.33	.17	64.29	.00	1.16	.00	2.000	.000	.00	1 .0
RIM=67.90	42.991	.0201					.0021	.09	2.77	.00	.79	.013	.00	.00	PIPE
	1267.541	62.213	2.000	64.213	10.47	3.33	.17	64.39	.00	1.16	.00	2.000	.000	.00	1 .0
	9.268	.0201					.0020	.02	2.00	.00	.79	.013	.00	.00	PIPE
	1276.809	62.399	1.814	64.213	10.47	3.50	.19	64.40	.00	1.16	1.16	2.000	.000	.00	1 .0
	4.909	.0201					.0019	.01	1.81	.38	.79	.013	.00	.00	PIPE
	1281.718	62.498	1.706	64.204	10.47	3.67	.21	64.41	.00	1.16	1.42	2.000	.000	.00	1 .0
	3.734	.0201					.0021	.01	1.71	.45	.79	.013	.00	.00	PIPE

WATER SURFACE PROFILE LISTING

Existing Juan Tabo Storm Drain at Cicada & Forego

Date: 4-29-2009 Time:10:36:40

Station / L/Elem	Invert Elev / Ch Slope	Depth (FT)	Water Elev	Q (CFS)	Vel (FPS)	Vel Head / SF Ave	Energy Grd.El. / HF	Super Elev / SE Dpth	Critical Depth / Froude N	Flow Top Width / Norm Dp	Height/Dia.-FT / "N"	Base Wt or I.D. / X-Fall	ZL / ZR	No Wth Prs/Pip / Type Ch
1285.452	62.573	1.618	64.191	10.47	3.84	.23	64.42	.00	1.16	1.57	2.000	.000	.00	1 .0
1.230	.0201					.0022	.00	1.62	.51	.79	.013	.00	.00	PIPE
1286.682	62.597	1.588	64.185	10.47	3.91	.24	64.42	.00	1.16	1.62	2.000	.000	.00	1 .0
HYDRAULIC JUMP														
1286.682	62.597	.832	63.429	10.47	8.47	1.11	64.54	.00	1.16	1.97	2.000	.000	.00	1 .0
4.607	.0201					.0163	.08	.83	1.88	.79	.013	.00	.00	PIPE
1291.289	62.690	.832	63.522	10.47	8.47	1.11	64.64	.00	1.16	1.97	2.000	.000	.00	1 .0
14.951	.0201					.0154	.23	.83	1.88	.79	.013	.00	.00	PIPE
MH 1306.240	62.990	.863	63.853	10.47	8.07	1.01	64.86	.00	1.16	1.98	2.000	.000	.00	1 .0
JUNCT STR	.0250					.0168	.07	.86	1.76		.013	.00	.00	PIPE
RIM=69.30 1310.240	63.090	.770	63.860	9.84	8.82	1.21	65.07	.00	1.12	1.95	2.000	.000	.00	1 .0
8.827	.0201					.0190	.17	.77	2.05	.76	.013	.00	.00	PIPE
1319.067	63.267	.773	64.040	9.84	8.77	1.19	65.23	.00	1.12	1.95	2.000	.000	.00	1 .0
32.898	.0201					.0177	.58	.77	2.03	.76	.013	.00	.00	PIPE
1351.965	63.929	.801	64.730	9.84	8.36	1.08	65.81	.00	1.12	1.96	2.000	.000	.00	1 .0
14.917	.0201					.0155	.23	.80	1.90	.76	.013	.00	.00	PIPE
1366.882	64.228	.831	65.059	9.84	7.97	.99	66.05	.00	1.12	1.97	2.000	.000	.00	1 .0
9.195	.0201					.0136	.13	.83	1.77	.76	.013	.00	.00	PIPE

36

WATER SURFACE PROFILE LISTING

Date: 4-29-2009 Time:10:36:40

Existing Juan Tabo Storm Drain at Cicada & Forego

Station / L/Elem	Invert Elev / Ch Slope	Depth (FT)	Water Elev	Q (CFS)	Vel (FPS)	Vel Head / SF Ave	Energy Grd.El. / HF	Super Elev / SE Dpth	Critical Depth / Froude N	Flow Top Width / Norm Dp	Height/Dia.-FT / "N"	Base Wt or I.D. / X-Fall	ZL / ZR	No Wth Prs/Pip / Type Ch
1376.078	64.413	.861	65.274	9.84	7.60	.90	66.17	.00	1.12	1.98	2.000	.000	.00	1 .0
6.079	.0201					.0120	.07	.86	1.66	.76	.013	.00	.00	PIPE
1382.157	64.535	.893	65.428	9.84	7.24	.82	66.24	.00	1.12	1.99	2.000	.000	.00	1 .0
4.213	.0201					.0105	.04	.89	1.54	.76	.013	.00	.00	PIPE
MH 1386.370	64.620	.927	65.547	9.84	6.91	.74	66.29	.00	1.12	1.99	2.000	.000	.00	1 .0
RIM=71.10 .119	.0220					.0098	.00	.93	1.44	.74	.013	.00	.00	PIPE
1386.489	64.623	.928	65.551	9.84	6.89	.74	66.29	.00	1.12	1.99	2.000	.000	.00	1 .0
2.500	.0220					.0092	.02	.93	1.44	.74	.013	.00	.00	PIPE
1388.988	64.678	.963	65.641	9.84	6.57	.67	66.31	.00	1.12	2.00	2.000	.000	.00	1 .0
1.792	.0220					.0081	.01	.96	1.34	.74	.013	.00	.00	PIPE
1390.780	64.717	.999	65.716	9.84	6.27	.61	66.33	.00	1.12	2.00	2.000	.000	.00	1 .0
1.102	.0220					.0071	.01	1.00	1.25	.74	.013	.00	.00	PIPE
1391.883	64.741	1.038	65.779	9.84	5.97	.55	66.33	.00	1.12	2.00	2.000	.000	.00	1 .0
.660	.0220					.0063	.00	1.04	1.16	.74	.013	.00	.00	PIPE
1392.542	64.756	1.078	65.834	9.84	5.70	.50	66.34	.00	1.12	1.99	2.000	.000	.00	1 .0
.188	.0220					.0055	.00	1.08	1.08	.74	.013	.00	.00	PIPE
1392.730	64.760	1.122	65.882	9.84	5.43	.46	66.34	2.00	1.12	1.99	2.000	.000	.00	1 .0
INLET JUNCT STR	.1667							2.00	1.00		.013	.00	.00	PIPE

GRATE = 70.83

39

Station / L/Elem	Invert Elev / Ch Slope	Depth (FT)	Water Elev	Q (CFS)	Vel (FPS)	Vel Head / SF Ave	Energy Grd.El. / HF	Super Elev / SE Dpth	Critical Depth / Froude N	Flow Top Width / Norm Dp	Height/Dia.-FT / "N"	Base Wt or I.D. / X-Fall	ZL / ZR	No Wth Prs/Pip / Type Ch
1395.730	65.260	.673	65.933	4.92	6.40	.64	66.57	.00	.85	1.49	1.500	.000	.00	1 .0
1.199	.0198					.0125	.02	.67	1.57	.60	.013	.00	.00	PIPE
1396.929	65.284	.679	65.963	4.92	6.32	.62	66.58	.00	.85	1.49	1.500	.000	.00	1 .0
3.705	.0198					.0116	.04	.68	1.54	.60	.013	.00	.00	PIPE
1400.633	65.357	.705	66.062	4.92	6.03	.56	66.63	.00	.85	1.50	1.500	.000	.00	1 .0
2.633	.0198					.0102	.03	.71	1.44	.60	.013	.00	.00	PIPE
1403.266	65.409	.731	66.140	4.92	5.75	.51	66.65	.00	.85	1.50	1.500	.000	.00	1 .0
1.719	.0198					.0090	.02	.73	1.34	.60	.013	.00	.00	PIPE
1404.985	65.443	.759	66.202	4.92	5.48	.47	66.67	.00	.85	1.50	1.500	.000	.00	1 .0
1.124	.0198					.0079	.01	.76	1.25	.60	.013	.00	.00	PIPE
1406.110	65.465	.788	66.253	4.92	5.22	.42	66.68	.00	.85	1.50	1.500	.000	.00	1 .0
.586	.0198					.0070	.00	.79	1.16	.60	.013	.00	.00	PIPE
1406.696	65.477	.819	66.296	4.92	4.98	.39	66.68	.00	.85	1.49	1.500	.000	.00	1 .0
.154	.0198					.0061	.00	.82	1.08	.60	.013	.00	.00	PIPE
INLET 1406.850	65.480	.853	66.333	4.92	4.74	.35	66.68	.00	.85	1.49	1.500	.000	.00	1 .0

GRATE=70.83

4/0

```
T1 Volterra Storm Drain on Monachos to Gulfstream                                                    0
T2
T3
SO   1000.000  54.870  1                                58.870
R    1099.430  56.150  1      .013                                    .000    .000 1
JX   1105.430  56.650  2      .013
R    1147.570  57.250  2      .013                                    .000    .000 1
JX   1153.570  57.350  5  3  4.013   12.610   12.610  58.850  58.850-45.0 45.0  45.000
R    1208.490  58.570  5      .013                                    .000    .000 1
JX   1214.490  59.070  8  6  7.013    6.400    6.400  60.570  60.570-45.0 45.0    .000
R    1273.790  60.370  8      .013                                    .000    .000 1
JX   1279.790  60.470 10  9   .013    5.250           61.470          90.0         .000
R    1310.060  61.190 10      .013                                    .000    .000 1
JX   1316.060  61.290 13 11 12.013    5.400    5.400  62.790  62.790-45.0 45.0    .000
R    1363.120  61.820 21      .013                                    .000    .000 1
JX   1369.120  61.920 23 22   .013     .800           63.420          90.0         .000
R    1449.250  62.780  5      .013                                    .000    .000 0
JX   1455.250  62.880  5 14   .013   16.800           64.280          90.0         .000
R    1660.500  65.390  5      .013                                    .000    .000 1
JX   1666.500  65.890 13 16   .013   16.600           66.890          90.0         .000
R    1726.280  66.540 13      .013                                    .000    .000 1
JX   1732.280  67.040 19 17   .013   21.890           67.040          45.0       45.000
R    1881.950  72.000 17      .013                                    .000    .000 1
SH   1881.950  72.000 17                                74.000
CD   1  4   1    .000   4.000     .000  .000  .000   .00
CD   2  4   1    .000   3.500     .000  .000  .000   .00
CD   3  4   1    .000   1.500     .000  .000  .000   .00
CD   4  4   1    .000   1.500     .000  .000  .000   .00
CD   5  4   1    .000   3.500     .000  .000  .000   .00
CD   6  4   1    .000   1.500     .000  .000  .000   .00
CD   7  4   1    .000   1.500     .000  .000  .000   .00
CD   8  4   1    .000   3.000     .000  .000  .000   .00
CD   9  4   1    .000   2.000     .000  .000  .000   .00
CD  10  4   1    .000   3.000     .000  .000  .000   .00
CD  11  4   1    .000   1.500     .000  .000  .000   .00
CD  12  4   1    .000   1.500     .000  .000  .000   .00
CD  13  4   1    .000   3.000     .000  .000  .000   .00
CD  14  4   1    .000   2.000     .000  .000  .000   .00
CD  15  4   1    .000   2.500     .000  .000  .000   .00
CD  16  4   1    .000   2.000     .000  .000  .000   .00
CD  17  4   1    .000   2.000     .000  .000  .000   .00
CD  18  4   1    .000   1.500     .000  .000  .000   .00
CD  19  4   1    .000   2.000     .000  .000  .000   .00
CD  21  4   1    .000   3.000     .000  .000  .000   .00
CD  22  4   1    .000   1.000     .000  .000  .000   .00
CD  23  4   1    .000   3.000     .000  .000  .000   .00
Q            13.480   .0
```

Program Package Serial Number: 1454

WATER SURFACE PROFILE LISTING Date: 4-28-2009 Time:11:38:43

Volterra Storm Drain on Monachos to Gulfstream

	Station / L/Elem	Invert Elev / Ch Slope	Depth (FT)	Water Elev	Q (CFS)	Vel (FPS)	Vel Head / SF Ave	Energy Grd.El. / HF	Super Elev / SE Dpth	Critical Depth / Froude N	Flow Top Width / Norm Dp	Height/Dia.-FT / "N"	Base Wt or I.D. / X-Fall	ZL / ZR	No Wth Prs/Pip / Type Ch
OUTFALL	1000.000	54.870	2.457	57.327	123.64	15.27	3.62	60.95	.00	3.34	3.89	4.000	.000	.00	1 .0
	30.355	.0129					.0156	.47	2.46	1.87	2.61	.013	.00	.00	PIPE
	1030.355	55.261	2.425	57.686	123.64	15.51	3.73	61.42	.00	3.34	3.91	4.000	.000	.00	1 .0
	69.075	.0129					.0169	1.17	2.43	1.91	2.61	.013	.00	.00	PIPE
	1099.430	56.150	2.331	58.481	123.64	16.26	4.11	62.59	.00	3.34	3.94	4.000	.000	.00	1 .0
MH8	JUNCT STR	.0833					.0157	.09	2.33	2.06		.013	.00	.00	PIPE
Rim=64.71	1105.430	56.650	3.096	59.746	123.64	13.73	2.93	62.67	.00	3.27	2.24	3.500	.000	.00	1 .0
	42.140	.0142					.0133	.56	3.10	1.21	2.97	.013	.00	.00	PIPE
	1147.570	57.250	3.272	60.522	123.64	13.22	2.71	63.23	3.50	3.27	1.73	3.500	.000	.00	1 .0
MH7	JUNCT STR	.0167					.0113	.07	3.50	1.00		.013	.00	.00	PIPE
Rim=65.00	1153.570	57.350	4.877	62.227	98.42	10.23	1.62	63.85	.00	3.05	.00	3.500	.000	.00	1 .0
	54.920	.0222					.0096	.53	4.88	.00	2.07	.013	.00	.00	PIPE
	1208.490	58.570	4.263	62.833	98.42	10.23	1.62	64.46	.00	3.05	.00	3.500	.000	.00	1 .0
MH6	JUNCT STR	.0833					.0130	.08	4.26	.00		.013	.00	.00	PIPE
Rim=65.30	1214.490	59.070	3.607	62.677	85.62	12.11	2.28	64.96	.00	2.82	.00	3.000	.000	.00	1 .0
	59.300	.0219					.0165	.98	3.61	.00	2.16	.013	.00	.00	PIPE
	1273.790	60.370	3.398	63.768	85.62	12.11	2.28	66.05	.00	2.82	.00	3.000	.000	.00	1 .0
MH5	JUNCT STR	.0167					.0155	.09	3.40	.00		.013	.00	.00	PIPE
Rim=66.53															

Station / L/Elem	Invert Elev / Ch Slope	Depth (FT)	Water Elev	Q (CFS)	Vel (FPS)	Vel Head / SF Ave	Energy Grd.El. / HF	Super Elev / SE Dpth	Critical Depth / Froude N	Flow Top Width / Norm Dp	Height/Dia.-FT / "N"	Base Wt or I.D. / X-Fall	ZL / ZR	No Wth Prs/Pip / Type Ch
1279.790	60.470	3.933	64.403	80.37	11.37	2.01	66.41	.00	2.77	.00	3.000	.000	.00	1 .0
30.270	.0238					.0145	.44	3.93	.00	2.00	.013	.00	.00	PIPE
1310.060	61.190	3.752	64.942	80.37	11.37	2.01	66.95	.00	2.77	.00	3.000	.000	.00	1 .0
MH4 JUNCT STR	.0167					.0127	.08	3.75	.00		.013	.00	.00	PIPE
Rim=67.04														
1316.060	61.290	4.633	65.923	69.57	9.84	1.50	67.43	.00	2.65	.00	3.000	.000	.00	1 .0
47.060	.0113					.0109	.51	4.63	.00	2.41	.013	.00	.00	PIPE
1363.120	61.820	4.690	66.510	69.57	9.84	1.50	68.01	.00	2.65	.00	3.000	.000	.00	1 .0
MH3A JUNCT STR	.0167					.0108	.06	4.69	.00		.013	.00	.00	PIPE
Rim=67.58														
1369.120	61.920	4.723	66.643	68.77	7.15	.79	67.44	.00	2.60	.00	3.500	.000	.00	1 .0
80.130	.0107					.0047	.37	4.72	.00	2.08	.013	.00	.00	PIPE
1449.250	62.780	4.237	67.017	68.77	7.15	.79	67.81	.00	2.60	.00	3.500	.000	.00	1 .0
MH3 JUNCT STR	.0167					.0037	.02	4.24	.00		.013	.00	.00	PIPE
Rim=68.43														
1455.250	62.880	4.840	67.720	51.97	5.40	.45	68.17	.00	2.25	.00	3.500	.000	.00	1 .0
141.796	.0122					.0026	.38	4.84	.00	1.68	.013	.00	.00	PIPE
1597.046	64.614	3.500	68.114	51.97	5.40	.45	68.57	.00	2.25	.00	3.500	.000	.00	1 .0
28.583	.0122					.0025	.07	3.50	.00	1.68	.013	.00	.00	PIPE
1625.629	64.964	3.175	68.139	51.97	5.67	.50	68.64	.00	2.25	2.03	3.500	.000	.00	1 .0
14.079	.0122					.0024	.03	3.18	.47	1.68	.013	.00	.00	PIPE

43

Station / L/Elem	Invert Elev / Ch Slope	Depth (FT)	Water Elev	Q (CFS)	Vel (FPS)	Vel Head / SF Ave	Energy Grd.El. / HF	Super Elev / SE Dpth	Critical Depth / Froude N	Flow Top Width / Norm Dp	Height/Dia.-FT / "N"	Base Wt or I.D. / X-Fall	ZL / ZR	No Wth Prs/Pip / Type Ch
1639.708	65.136	2.987	68.123	51.97	5.94	.55	68.67	.00	2.25	2.48	3.500	.000	.00	1 .0
10.524	.0122					.0026	.03	2.99	.56	1.68	.013	.00	.00	PIPE
1650.232	65.264	2.831	68.096	51.97	6.23	.60	68.70	.00	2.25	2.75	3.500	.000	.00	1 .0
8.094	.0122					.0029	.02	2.83	.63	1.68	.013	.00	.00	PIPE
1658.326	65.363	2.695	68.059	51.97	6.54	.66	68.72	.00	2.25	2.95	3.500	.000	.00	1 .0
2.174	.0122					.0031	.01	2.70	.70	1.68	.013	.00	.00	PIPE
1660.500	65.390	2.655	68.045	51.97	6.64	.68	68.73	.00	2.25	3.00	3.500	.000	.00	1 .0
MH2 JUNCT STR	.0833					.0028	.02	2.65	.72		.013	.00	.00	PIPE
RIM=70.57 1666.500	65.890	2.865	68.755	35.37	5.09	.40	69.16	.00	1.93	1.24	3.000	.000	.00	1 .0
19.372	.0109					.0025	.05	2.86	.38	1.52	.013	.00	.00	PIPE
1685.872	66.101	2.662	68.763	35.37	5.33	.44	69.20	.00	1.93	1.90	3.000	.000	.00	1 .0
12.683	.0109					.0026	.03	2.66	.50	1.52	.013	.00	.00	PIPE
1698.555	66.239	2.513	68.752	35.37	5.59	.49	69.24	.00	1.93	2.21	3.000	.000	.00	1 .0
9.765	.0109					.0028	.03	2.51	.58	1.52	.013	.00	.00	PIPE
1708.321	66.345	2.386	68.731	35.37	5.87	.53	69.27	.00	1.93	2.42	3.000	.000	.00	1 .0
7.699	.0109					.0031	.02	2.39	.66	1.52	.013	.00	.00	PIPE
1716.020	66.428	2.273	68.702	35.37	6.15	.59	69.29	.00	1.93	2.57	3.000	.000	.00	1 .0
5.717	.0109					.0035	.02	2.27	.73	1.52	.013	.00	.00	PIPE

44

Program Package Serial Number: 1454

WATER SURFACE PROFILE LISTING Date: 4-28-2009 Time:11:38:43

Volterra Storm Drain on Monachos to Gulfstream

Station / L/Elem	Invert Elev / Ch Slope	Depth (FT)	Water Elev	Q (CFS)	Vel (FPS)	Vel Head / SF Ave	Energy Grd.El. / HF	Super Elev / SE Dpth	Critical Depth / Froude N	Flow Top Width / Norm Dp	Height/ Dia.-FT / "N"	Base Wt or I.D. / X-Fall	ZL / ZR	No Wth Prs/Pip / Type Ch
1721.737	66.491	2.172	68.663	35.37	6.45	.65	69.31	.00	1.93	2.68	3.000	.000	.00	1 .0
4.207	.0109					.0039	.02	2.17	.80	1.52	.013	.00	.00	PIPE
1725.945	66.536	2.078	68.614	35.37	6.77	.71	69.33	.00	1.93	2.77	3.000	.000	.00	1 .0
.335	.0109					.0041	.00	2.08	.87	1.52	.013	.00	.00	PIPE
1726.280	66.540	2.069	68.609	35.37	6.80	.72	69.33	.52	1.93	2.78	3.000	.000	.00	1 .0
MH1 JUNCT STR	.0833					.0039	.02	2.59	.88		.013	.00	.00	PIPE
Rim = 71.98														
1732.280	67.040	2.150	69.190	13.48	4.29	.29	69.48	.00	1.32	.00	2.000	.000	.00	1 .0
1.519	.0331					.0036	.01	2.15	.00	.79	.013	.00	.00	PIPE
1733.799	67.090	2.105	69.196	13.48	4.29	.29	69.48	.00	1.32	.00	2.000	.000	.00	1 .0
HYDRAULIC JUMP														
1733.799	67.090	.790	67.880	13.48	11.68	2.12	70.00	.00	1.32	1.96	2.000	.000	.00	1 .0
58.547	.0331					.0316	1.85	.79	2.68	.79	.013	.00	.00	PIPE
1792.347	69.031	.805	69.836	13.48	11.38	2.01	71.85	.00	1.32	1.96	2.000	.000	.00	1 .0
33.988	.0331					.0286	.97	.81	2.58	.79	.013	.00	.00	PIPE
1826.335	70.157	.834	70.991	13.48	10.85	1.83	72.82	.00	1.32	1.97	2.000	.000	.00	1 .0
16.874	.0331					.0251	.42	.83	2.41	.79	.013	.00	.00	PIPE
1843.208	70.716	.865	71.581	13.48	10.35	1.66	73.24	.00	1.32	1.98	2.000	.000	.00	1 .0
10.769	.0331					.0221	.24	.87	2.25	.79	.013	.00	.00	PIPE

45

Station / L/Elem	Invert Elev / Ch Slope	Depth (FT)	Water Elev	Q (CFS)	Vel (FPS)	Vel Head / SF Ave	Energy Grd.El. / HF	Super Elev / SE Dpth	Critical Depth / Froude N	Flow Top Width / Norm Dp	Height/Dia.-FT / "N"	Base Wt or I.D. / X-Fall	ZL / ZR	No Wth Prs/Pip / Type Ch
1853.977	71.073	.897	71.970	13.48	9.87	1.51	73.48	.00	1.32	1.99	2.000	.000	.00	1 .0
7.531	.0331					.0194	.15	.90	2.10	.79	.013	.00	.00	PIPE
1861.508	71.323	.931	72.254	13.48	9.41	1.37	73.63	.00	1.32	2.00	2.000	.000	.00	1 .0
5.597	.0331					.0171	.10	.93	1.96	.79	.013	.00	.00	PIPE
1867.105	71.508	.966	72.474	13.48	8.97	1.25	73.72	.00	1.32	2.00	2.000	.000	.00	1 .0
4.281	.0331					.0150	.06	.97	1.82	.79	.013	.00	.00	PIPE
1871.385	71.650	1.002	72.652	13.48	8.55	1.14	73.79	.00	1.32	2.00	2.000	.000	.00	1 .0
3.226	.0331					.0132	.04	1.00	1.70	.79	.013	.00	.00	PIPE
1874.611	71.757	1.041	72.798	13.48	8.15	1.03	73.83	.00	1.32	2.00	2.000	.000	.00	1 .0
2.507	.0331					.0117	.03	1.04	1.58	.79	.013	.00	.00	PIPE
1877.119	71.840	1.081	72.921	13.48	7.77	.94	73.86	.00	1.32	1.99	2.000	.000	.00	1 .0
1.852	.0331					.0103	.02	1.08	1.47	.79	.013	.00	.00	PIPE
1878.970	71.901	1.124	73.025	13.48	7.41	.85	73.88	.00	1.32	1.98	2.000	.000	.00	1 .0
1.354	.0331					.0091	.01	1.12	1.36	.79	.013	.00	.00	PIPE
1880.324	71.946	1.169	73.115	13.48	7.07	.78	73.89	.00	1.32	1.97	2.000	.000	.00	1 .0
.936	.0331					.0080	.01	1.17	1.27	.79	.013	.00	.00	PIPE
1881.260	71.977	1.216	73.193	13.48	6.74	.71	73.90	.00	1.32	1.95	2.000	.000	.00	1 .0
.542	.0331					.0071	.00	1.22	1.17	.79	.013	.00	.00	PIPE

46

Program Package Serial Number: 1454

WATER SURFACE PROFILE LISTING Date: 4-28-2009 Time:11:38:43

Volterra Storm Drain on Monachos to Gulfstream

Station / L/Elem	Invert Elev / Ch Slope	Depth (FT)	Water Elev	Q (CFS)	Vel (FPS)	Vel Head / SF Ave	Energy Grd.El. / HF	Super Elev / SE Dpth	Critical Depth / Froude N	Flow Top Width / Norm Dp	Height/Dia.-FT / "N"	Base Wt or I.D. / X-Fall	ZL / ZR	No Wth Prs/Pip / Type Ch
1881.802	71.995	1.266	73.261	13.48	6.42	.64	73.90	.00	1.32	1.93	2.000	.000	.00	1 .0
.148	.0331					.0063	.00	1.27	1.09	.79	.013	.00	.00	PIPE
1881.950	72.000	1.321	73.321	13.48	6.12	.58	73.90	.00	1.32	1.89	2.000	.000	.00	1 .0

INLET A

GATE=76.00
SGL "A"

47

```
T1 Volterra Storm Drain on Monachos to Open Space                                                    0
T2
T3
SO   1000.000  54.870  1                                58.870
R    1099.430  56.150  1       .013                                    .000    .000 1
JX   1105.430  56.650  2       .013
R    1147.570  57.250  2       .013                                    .000    .000 1
JX   1153.570  57.350  5  3  4.013    12.610    12.610  58.850  58.850-45.0 45.0  45.000
R    1208.490  58.570  5       .013                                    .000    .000 1
JX   1214.490  59.070  8  6  7.013     6.400     6.400  60.570  60.570-45.0 45.0    .000
R    1273.790  60.370  8       .013                                    .000    .000 1
JX   1279.790  60.470 10  9   .013     5.250            61.470          90.0         .000
R    1310.060  61.190 10       .013                                    .000    .000 1
JX   1316.060  61.290  5 11 12.013     5.400     5.400  62.790  62.790-45.0 45.0    .000
R    1363.120  61.820  5       .013                                    .000    .000 1
JX   1369.120  61.920  5 22   .013      .800            63.420          90.0         .000
R    1449.250  62.780  5       .013                                    .000    .000 0
JX   1455.250  62.880  5 14   .013    16.800            64.280          90.0         .000
R    1660.500  65.390  5       .013                                    .000    .000 1
JX   1666.500  65.890 13 16   .013    16.600            66.890          90.0         .000
R    1726.280  66.540 13       .013                                    .000    .000 1
JX   1732.280  67.040 19 17   .013    13.480            67.040          45.0       45.000
R    1816.660  69.000 17       .013                                    .000    .000 1
SH   1816.660  69.000 17                                71.000
CD   1  4   1    .000   4.000     .000  .000  .000   .00
CD   2  4   1    .000   3.500     .000  .000  .000   .00
CD   3  4   1    .000   1.500     .000  .000  .000   .00
CD   4  4   1    .000   1.500     .000  .000  .000   .00
CD   5  4   1    .000   3.500     .000  .000  .000   .00
CD   6  4   1    .000   1.500     .000  .000  .000   .00
CD   7  4   1    .000   1.500     .000  .000  .000   .00
CD   8  4   1    .000   3.000     .000  .000  .000   .00
CD   9  4   1    .000   2.000     .000  .000  .000   .00
CD  10  4   1    .000   3.000     .000  .000  .000   .00
CD  11  4   1    .000   1.500     .000  .000  .000   .00
CD  12  4   1    .000   1.500     .000  .000  .000   .00
CD  13  4   1    .000   3.000     .000  .000  .000   .00
CD  14  4   1    .000   2.000     .000  .000  .000   .00
CD  15  4   1    .000   2.500     .000  .000  .000   .00
CD  16  4   1    .000   2.000     .000  .000  .000   .00
CD  17  4   1    .000   2.000     .000  .000  .000   .00
CD  18  4   1    .000   1.500     .000  .000  .000   .00
CD  19  4   1    .000   2.000     .000  .000  .000   .00
CD  21  4   1    .000   3.000     .000  .000  .000   .00
CD  22  4   1    .000   1.000     .000  .000  .000   .00
CD  23  4   1    .000   3.000     .000  .000  .000   .00
Q            21.890   .0
```

Program Package Serial Number: 1454

WATER SURFACE PROFILE LISTING Date: 4-28-2009 Time:11:45:46

Volterra Storm Drain on Monachos to Open Space

Station / L/Elem	Invert Elev / Ch Slope	Depth (FT)	Water Elev	Q (CFS)	Vel (FPS)	Vel Head / SF Ave	Energy Grd.El. / HF	Super Elev / SE Dpth	Critical Depth / Froude N	Flow Top Width / Norm Dp	Height/Dia.-FT / "N"	Base Wt or I.D. / X-Fall	ZL / ZR	No Wth Prs/Pip / Type Ch
1000.000	54.870	2.457	57.327	123.64	15.27	3.62	60.95	.00	3.34	3.89	4.000	.000	.00	1 .0
30.355	.0129					.0156	.47	2.46	1.87	2.61	.013	.00	.00	PIPE
1030.355	55.261	2.425	57.686	123.64	15.51	3.73	61.42	.00	3.34	3.91	4.000	.000	.00	1 .0
69.075	.0129					.0169	1.17	2.43	1.91	2.61	.013	.00	.00	PIPE
1099.430	56.150	2.331	58.481	123.64	16.26	4.11	62.59	.00	3.34	3.94	4.000	.000	.00	1 .0
JUNCT STR	.0833					.0157	.09	2.33	2.06		.013	.00	.00	PIPE
1105.430	56.650	3.096	59.746	123.64	13.73	2.93	62.67	.00	3.27	2.24	3.500	.000	.00	1 .0
42.140	.0142					.0133	.56	3.10	1.21	2.97	.013	.00	.00	PIPE
1147.570	57.250	3.272	60.522	123.64	13.22	2.71	63.23	3.50	3.27	1.73	3.500	.000	.00	1 .0
JUNCT STR	.0167					.0113	.07	3.50	1.00		.013	.00	.00	PIPE
1153.570	57.350	4.877	62.227	98.42	10.23	1.62	63.85	.00	3.05	.00	3.500	.000	.00	1 .0
54.920	.0222					.0096	.53	4.88	.00	2.07	.013	.00	.00	PIPE
1208.490	58.570	4.263	62.833	98.42	10.23	1.62	64.46	.00	3.05	.00	3.500	.000	.00	1 .0
JUNCT STR	.0833					.0130	.08	4.26	.00		.013	.00	.00	PIPE
1214.490	59.070	3.607	62.677	85.62	12.11	2.28	64.96	.00	2.82	.00	3.000	.000	.00	1 .0
59.300	.0219					.0165	.98	3.61	.00	2.16	.013	.00	.00	PIPE
1273.790	60.370	3.398	63.768	85.62	12.11	2.28	66.05	.00	2.82	.00	3.000	.000	.00	1 .0
JUNCT STR	.0167					.0155	.09	3.40	.00		.013	.00	.00	PIPE

Program Package Serial Number: 1454

WATER SURFACE PROFILE LISTING Date: 4-28-2009 Time:11:45:46

Volterra Storm Drain on Monachos to Open Space

Station / L/Elem	Invert Elev / Ch Slope	Depth (FT)	Water Elev	Q (CFS)	Vel (FPS)	Vel Head / SF Ave	Energy Grd.El. / HF	Super Elev / SE Dpth	Critical Depth / Froude N	Flow Top Width / Norm Dp	Height/Dia.-FT / "N"	Base Wt or I.D. / X-Fall	ZL / ZR	No Wth Prs/Pip / Type Ch
1279.790	60.470	3.933	64.403	80.37	11.37	2.01	66.41	.00	2.77	.00	3.000	.000	.00	1 .0
30.270	.0238					.0145	.44	3.93	.00	2.00	.013	.00	.00	PIPE
1310.060	61.190	3.752	64.942	80.37	11.37	2.01	66.95	.00	2.77	.00	3.000	.000	.00	1 .0
JUNCT STR	.0167					.0097	.06	3.75	.00		.013	.00	.00	PIPE
1316.060	61.290	5.152	66.442	69.57	7.23	.81	67.25	.00	2.61	.00	3.500	.000	.00	1 .0
47.060	.0113					.0048	.23	5.15	.00	2.06	.013	.00	.00	PIPE
1363.120	61.820	4.888	66.708	69.57	7.23	.81	67.52	.00	2.61	.00	3.500	.000	.00	1 .0
JUNCT STR	.0167					.0047	.03	4.89	.00		.013	.00	.00	PIPE
1369.120	61.920	4.853	66.773	68.77	7.15	.79	67.57	.00	2.60	.00	3.500	.000	.00	1 .0
80.130	.0107					.0047	.37	4.85	.00	2.08	.013	.00	.00	PIPE
1449.250	62.780	4.368	67.148	68.77	7.15	.79	67.94	.00	2.60	.00	3.500	.000	.00	1 .0
JUNCT STR	.0167					.0037	.02	4.37	.00		.013	.00	.00	PIPE
1455.250	62.880	4.970	67.850	51.97	5.40	.45	68.30	.00	2.25	.00	3.500	.000	.00	1 .0
155.562	.0122					.0026	.41	4.97	.00	1.68	.013	.00	.00	PIPE
1610.812	64.782	3.500	68.282	51.97	5.40	.45	68.74	.00	2.25	.00	3.500	.000	.00	1 .0
28.583	.0122					.0025	.07	3.50	.00	1.68	.013	.00	.00	PIPE
1639.395	65.132	3.175	68.307	51.97	5.67	.50	68.81	.00	2.25	2.03	3.500	.000	.00	1 .0
14.079	.0122					.0024	.03	3.18	.47	1.68	.013	.00	.00	PIPE

Program Package Serial Number: 1454

WATER SURFACE PROFILE LISTING Date: 4-28-2009 Time:11:45:46

Volterra Storm Drain on Monachos to Open Space

Station / L/Elem	Invert Elev / Ch Slope	Depth (FT)	Water Elev	Q (CFS)	Vel (FPS)	Vel Head / SF Ave	Energy Grd.El. / HF	Super Elev / SE Dpth	Critical Depth / Froude N	Flow Top Width / Norm Dp	Height/Dia.-FT / "N"	Base Wt or I.D. / X-Fall	ZL / ZR	No Wth Prs/Pip / Type Ch
1653.474	65.304	2.987	68.291	51.97	5.94	.55	68.84	.00	2.25	2.48	3.500	.000	.00	1 .0
7.026	.0122					.0026	.02	2.99	.56	1.68	.013	.00	.00	PIPE
1660.500	65.390	2.885	68.275	51.97	6.13	.58	68.86	.00	2.25	2.66	3.500	.000	.00	1 .0
JUNCT STR	.0833					.0026	.02	2.89	.60		.013	.00	.00	PIPE
1666.500	65.890	2.964	68.854	35.37	5.01	.39	69.24	.00	1.93	.65	3.000	.000	.00	1 .0
25.401	.0109					.0025	.06	2.96	.27	1.52	.013	.00	.00	PIPE
1691.901	66.166	2.713	68.879	35.37	5.26	.43	69.31	.00	1.93	1.76	3.000	.000	.00	1 .0
14.068	.0109					.0026	.04	2.71	.47	1.52	.013	.00	.00	PIPE
1705.969	66.319	2.553	68.872	35.37	5.52	.47	69.34	.00	1.93	2.14	3.000	.000	.00	1 .0
10.455	.0109					.0028	.03	2.55	.56	1.52	.013	.00	.00	PIPE
1716.424	66.433	2.421	68.854	35.37	5.79	.52	69.37	.00	1.93	2.37	3.000	.000	.00	1 .0
8.180	.0109					.0030	.02	2.42	.63	1.52	.013	.00	.00	PIPE
1724.603	66.522	2.305	68.827	35.37	6.07	.57	69.40	.00	1.93	2.53	3.000	.000	.00	1 .0
1.677	.0109					.0032	.01	2.31	.70	1.52	.013	.00	.00	PIPE
1726.280	66.540	2.279	68.819	35.37	6.14	.59	69.40	.39	1.93	2.56	3.000	.000	.00	1 .0
JUNCT STR	.0833							2.67	.72		.013	.00	.00	PIPE
1732.280	67.040	1.197	68.237	21.89	11.15	1.93	70.17	.00	1.67	1.96	2.000	.000	.00	1 .0
21.348	.0232					.0203	.43	1.20	1.96	1.16	.013	.00	.00	PIPE

5

Station / L/Elem	Invert Elev / Ch Slope	Depth (FT)	Water Elev	Q (CFS)	Vel (FPS)	Vel Head / SF Ave	Energy Grd.El. / HF	Super Elev / SE Dpth	Critical Depth / Froude N	Flow Top Width / Norm Dp	Height/Dia.-FT / "N"	Base Wt or I.D. / X-Fall	ZL / ZR	No Wth Prs/Pip / Type Ch
1753.628	67.536	1.220	68.756	21.89	10.90	1.85	70.60	.00	1.67	1.95	2.000	.000	.00	1 .0
25.432	.0232					.0186	.47	1.22	1.89	1.16	.013	.00	.00	PIPE
1779.060	68.127	1.270	69.397	21.89	10.40	1.68	71.08	.00	1.67	1.93	2.000	.000	.00	1 .0
14.639	.0232					.0165	.24	1.27	1.75	1.16	.013	.00	.00	PIPE
1793.699	68.467	1.324	69.791	21.89	9.91	1.53	71.32	.00	1.67	1.89	2.000	.000	.00	1 .0
9.428	.0232					.0147	.14	1.32	1.62	1.16	.013	.00	.00	PIPE
1803.127	68.686	1.382	70.068	21.89	9.45	1.39	71.45	.00	1.67	1.85	2.000	.000	.00	1 .0
6.314	.0232					.0131	.08	1.38	1.49	1.16	.013	.00	.00	PIPE
1809.442	68.832	1.444	70.276	21.89	9.01	1.26	71.54	.00	1.67	1.79	2.000	.000	.00	1 .0
4.131	.0232					.0117	.05	1.44	1.36	1.16	.013	.00	.00	PIPE
1813.572	68.928	1.511	70.439	21.89	8.59	1.15	71.59	.00	1.67	1.72	2.000	.000	.00	1 .0
2.298	.0232					.0105	.02	1.51	1.24	1.16	.013	.00	.00	PIPE
1815.870	68.982	1.586	70.568	21.89	8.19	1.04	71.61	.00	1.67	1.62	2.000	.000	.00	1 .0
.790	.0232					.0095	.01	1.59	1.12	1.16	.013	.00	.00	PIPE
1816.660	69.000	1.671	70.671	21.89	7.81	.95	71.62	.00	1.67	1.48	2.000	.000	.00	1 .0

```
T1 Volterra Storm Drain on Monachos to Borrega                                0
T2
T3
SO   1455.250  62.880  1                            67.850
R    1660.500  65.390  1      .013                                  .000    .000 1
JX   1666.500  66.890  3  2   .013   35.370           65.890           .0       90.000
R    1716.220  67.490  3      .013                                  .000    .000 1
JX   1720.220  67.590  4      .013
R    1762.180  68.090  4      .013                                  .000    .000 1
JX   1766.180  68.170  6  5   .013    7.100           68.170           .0       45.000
R    1783.150  68.340  6      .013                                  .000    .000 1
SH   1783.150  68.340  6                            69.840
CD   1  4   1    .000   3.500     .000  .000  .000   .00
CD   2  4   1    .000   3.000     .000  .000  .000   .00
CD   3  4   1    .000   2.000     .000  .000  .000   .00
CD   4  4   1    .000   2.000     .000  .000  .000   .00
CD   5  4   1    .000   1.500     .000  .000  .000   .00
CD   6  4   1    .000   1.500     .000  .000  .000   .00
Q             9.500   .0
```

Program Package Serial Number: 1454

WATER SURFACE PROFILE LISTING Date: 4-28-2009 Time: 1:21:15

Volterra Storm Drain on Monachos to Borrega

Station / L/Elem	Invert Elev / Ch Slope	Depth (FT)	Water Elev	Q (CFS)	Vel (FPS)	Vel Head / SF Ave	Energy Grd.El. / HF	Super Elev / SE Dpth	Critical Depth / Froude N	Flow Top Width / Norm Dp	Height/Dia.-FT / "N"	Base Wt or I.D. / X-Fall	ZL / ZR	No Wth Prs/Pip / Type Ch
1455.250	62.880	4.970	67.850	51.97	5.40	.45	68.30	.00	2.25	.00	3.500	.000	.00	1 .0
155.549	.0122					.0026	.41	4.97	.00	1.68	.013	.00	.00	PIPE
1610.799	64.782	3.500	68.282	51.97	5.40	.45	68.74	.00	2.25	.00	3.500	.000	.00	1 .0
28.583	.0122					.0025	.07	3.50	.00	1.68	.013	.00	.00	PIPE
1639.382	65.132	3.175	68.307	51.97	5.67	.50	68.81	.00	2.25	2.03	3.500	.000	.00	1 .0
14.079	.0122					.0024	.03	3.18	.47	1.68	.013	.00	.00	PIPE
1653.461	65.304	2.987	68.291	51.97	5.94	.55	68.84	.00	2.25	2.48	3.500	.000	.00	1 .0
7.039	.0122					.0026	.02	2.99	.56	1.68	.013	.00	.00	PIPE
1660.500	65.390	2.884	68.274	51.97	6.13	.58	68.86	3.50	2.25	2.66	3.500	.000	.00	1 .0
MH2 JUNCT STR	.2500							3.50	.61		.013	.00	.00	PIPE
RIM=70.57 1666.500	66.890	1.194	68.084	16.60	8.49	1.12	69.20	.00	1.47	1.96	2.000	.000	.00	1 .0
49.720	.0121					.0122	.61	1.19	1.50	1.20	.013	.00	.00	PIPE
1716.220	67.490	1.188	68.678	16.60	8.53	1.13	69.81	.00	1.47	1.96	2.000	.000	.00	1 .0
MH JUNCT STR	.0250					.0116	.05	1.19	1.51		.013	.00	.00	PIPE
RIM= 1720.220	67.590	1.236	68.826	16.60	8.14	1.03	69.86	.00	1.47	1.94	2.000	.000	.00	1 .0
.976	.0119					.0109	.01	1.24	1.40	1.20	.013	.00	.00	PIPE
1721.196	67.602	1.237	68.839	16.60	8.13	1.03	69.86	.00	1.47	1.94	2.000	.000	.00	1 .0
24.581	.0119					.0102	.25	1.24	1.40	1.20	.013	.00	.00	PIPE

Station / L/Elem	Invert Elev / Ch Slope	Depth (FT)	Water Elev	Q (CFS)	Vel (FPS)	Vel Head / SF Ave	Energy Grd.El. / HF	Super Elev / SE Dpth	Critical Depth / Froude N	Flow Top Width / Norm Dp	Height/Dia.-FT / "N"	Base Wt or I.D. / X-Fall	ZL / ZR	No Wth Prs/Pip / Type Ch
1745.776	67.895	1.289	69.184	16.60	7.75	.93	70.12	.00	1.47	1.91	2.000	.000	.00	1 .0
10.539	.0119					.0091	.10	1.29	1.29	1.20	.013	.00	.00	PIPE
1756.315	68.020	1.344	69.364	16.60	7.39	.85	70.21	.00	1.47	1.88	2.000	.000	.00	1 .0
4.723	.0119					.0081	.04	1.34	1.19	1.20	.013	.00	.00	PIPE
1761.038	68.076	1.403	69.479	16.60	7.05	.77	70.25	.00	1.47	1.83	2.000	.000	.00	1 .0
1.142	.0119					.0072	.01	1.40	1.09	1.20	.013	.00	.00	PIPE
1762.180	68.090	1.469	69.559	16.60	6.71	.70	70.26	.49	1.47	1.77	2.000	.000	.00	1 .0
MH JUNCT STR	.0200					.0075	.03	1.95	1.00		.013	.00	.00	PIPE
RIM = 1766.180	68.170	1.885	70.055	9.50	5.38	.45	70.50	.00	1.19	.00	1.500	.000	.00	1 .0
16.970	.0100					.0082	.14	1.89	.00	1.12	.013	.00	.00	PIPE
TYPE B INLET 1783.150	68.340	1.876	70.216	9.50	5.38	.45	70.67	.00	1.19	.00	1.500	.000	.00	1 .0
FL = 72.34														

```
T1 Volterra Storm Drain on Monachos to Volponi                                0
T2
T3
SO   1369.120  62.780  1                            66.640
R    1449.250  62.780  1      .013                                  .000    .000 1
JX   1455.250  64.280  3  2   .013   51.970           62.880           .0       90.000
R    1496.090  64.770  3      .013                                  .000    .000 1
JX   1500.090  64.870  4      .013
R    1566.290  65.660  4      .013                                  .000    .000 1
JX   1570.290  66.060  6  5   .013    8.400           66.060           .0       45.000
R    1595.780  66.320  6      .013                                  .000    .000 1
SH   1595.780  66.320  6                            67.820
CD   1  4   1    .000   3.500     .000  .000  .000   .00
CD   2  4   1    .000   3.500     .000  .000  .000   .00
CD   3  4   1    .000   2.000     .000  .000  .000   .00
CD   4  4   1    .000   2.000     .000  .000  .000   .00
CD   5  4   1    .000   1.500     .000  .000  .000   .00
CD   6  4   1    .000   1.500     .000  .000  .000   .00
Q             8.400   .0
```

Program Package Serial Number: 1454

WATER SURFACE PROFILE LISTING Date: 4-28-2009 Time: 2: 1:28

Volterra Storm Drain on Monachos to Volponi

	Station / L/Elem	Invert Elev / Ch Slope	Depth (FT)	Water Elev	Q (CFS)	Vel (FPS)	Vel Head / SF Ave	Energy Grd.El. / HF	Super Elev / SE Dpth	Critical Depth / Froude N	Flow Top Width / Norm Dp	Height/ Dia.-FT / "N"	Base Wt or I.D. / X-Fall	ZL / ZR	No Wth Prs/Pip / Type Ch
	1369.120	62.780	3.860	66.640	68.77	7.15	.79	67.43	.00	2.60	.00	3.500	.000	.00	1 .0
	80.130	.0000					.0047	.37	3.86	.00	.00	.013	.00	.00	PIPE
MH3	1449.250	62.780	4.274	67.054	68.77	7.15	.79	67.85	.00	2.60	.00	3.500	.000	.00	1 .0
	JUNCT STR	.2500					.0051	.03	.00	.00		.013	.00	.00	PIPE
RIM=68.43	1455.250	64.280	3.393	67.673	16.80	5.35	.44	68.12	.00	1.48	.00	2.000	.000	.00	1 .0
	40.840	.0120					.0055	.23	3.39	.00	1.21	.013	.00	.00	PIPE
	1496.090	64.770	3.151	67.921	16.80	5.35	.44	68.36	.00	1.48	.00	2.000	.000	.00	1 .0
MH	JUNCT STR	.0250					.0055	.02	3.15	.00		.013	.00	.00	PIPE
RIM=	1500.090	64.870	3.073	67.943	16.80	5.35	.44	68.39	.00	1.48	.00	2.000	.000	.00	1 .0
	66.200	.0119					.0055	.37	3.07	.00	1.21	.013	.00	.00	PIPE
	1566.290	65.660	2.670	68.330	16.80	5.35	.44	68.77	.00	1.48	.00	2.000	.000	.00	1 .0
MH	JUNCT STR	.1000					.0060	.02	.00	.00		.013	.00	.00	PIPE
RIM=	1570.290	66.060	2.420	68.480	8.40	4.75	.35	68.83	.00	1.12	.00	1.500	.000	.00	1 .0
	25.490	.0102					.0064	.16	2.42	.00	1.01	.013	.00	.00	PIPE
TYPE B	1595.780	66.320	2.341	68.661	8.40	4.75	.35	69.01	.00	1.12	.00	1.500	.000	.00	1 .0
FL=70.32															

5

```
T1 Volterra Storm Drain on Monachos to Domino                                0
T2
T3
SO   1214.490  59.070  1                            62.677
R    1273.790  60.370  1      .013                                  .000    .000 1
JX   1279.790  61.470  3  1   .013   80.370           60.470           .0       90.000
R    1352.250  62.980  3      .013                                  .000    .000 1
JX   1356.250  63.260  5  4   .013    2.450           63.260           .0       45.000
R    1375.640  63.480  5      .013                                  .000    .000 1
SH   1375.640  63.480  5                            64.980
CD   1  4   1    .000   3.000     .000  .000  .000   .00
CD   2  4   1    .000   1.500     .000  .000  .000   .00
CD   3  4   1    .000   2.000     .000  .000  .000   .00
CD   4  4   1    .000   1.500     .000  .000  .000   .00
CD   5  4   1    .000   1.500     .000  .000  .000   .00
Q             2.800   .0
```

FILE: voldomino.WSW

W S P G W - CIVILDESIGN Version 14.05

Program Package Serial Number: 1454

WATER SURFACE PROFILE LISTING

Volterra Storm Drain on Monachos to Domino

Date: 4-28-2009 Time: 3:16:58

Station / L/Elem	Invert Elev / Ch Slope	Depth (FT)	Water Elev	Q (CFS)	Vel (FPS)	Vel Head / SF Ave	Energy Grd.El. / HF	Super Elev / SE Dpth	Critical Depth / Froude N	Flow Top Width / Norm Dp	Height/Dia.-FT / "N"	Base Wt or I.D. / X-Fall	ZL / ZR	No Wth Prs/Pip / Type Ch
1214.490	59.070	3.607	62.677	85.62	12.11	2.28	64.96	.00	2.82	.00	3.000	.000	.00	1 .0
59.300	.0219					.0165	.98	3.61	.00	2.16	.013	.00	.00	PIPE
1273.790	60.370	3.398	63.768	85.62	12.11	2.28	66.05	.00	2.82	.00	3.000	.000	.00	1 .0
MH5 JUNCT STR	.1833					.0085	.05	.00	.00		.013	.00	.00	PIPE
Rim = 66.53 1279.790	61.470	4.584	66.054	5.25	1.67	.04	66.10	.00	.81	.00	2.000	.000	.00	1 .0
72.460	.0208					.0005	.04	4.58	.00	.54	.013	.00	.00	PIPE
1352.250	62.980	3.115	66.095	5.25	1.67	.04	66.14	.00	.81	.00	2.000	.000	.00	1 .0
MH JUNCT STR	.0700					.0006	.00	.00	.00		.013	.00	.00	PIPE
Rim = 1356.250	63.260	2.850	66.110	2.80	1.58	.04	66.15	.00	.64	.00	1.500	.000	.00	1 .0
19.390	.0113					.0007	.01	2.85	.00	.51	.013	.00	.00	PIPE
B INLET 1375.640	63.480	2.645	66.125	2.80	1.58	.04	66.16	.00	.64	.00	1.500	.000	.00	1 .0

FL = 67.48

59

```
T1 Juan Tabo Storm Drain to Cicada                                        0
T2
T3
SO   1156.210  59.950  1                            63.840
R    1202.480  60.880  1      .013                                .000    .000 1
JX   1206.480  61.480  3  2   .013   10.470           60.980          .0       45.000
R    1595.810  73.000  3      .013                                .000    .000 1
SH   1595.810  73.000  3                            74.000
CD   1  4   1    .000   2.000     .000  .000  .000   .00
CD   2  4   1    .000   2.000     .000  .000  .000   .00
CD   3  4   1    .000   1.500     .000  .000  .000   .00
Q              .710   .0
```

W S P G W - CIVILDESIGN Version 14.05
Program Package Serial Number: 1454
WATER SURFACE PROFILE LISTING
Juan Tabo Storm Drain to Cicada

Date: 8- 5-2009 Time:11:10: 0

Station / L/Elem	Invert Elev / Ch Slope	Depth (FT)	Water Elev	Q (CFS)	Vel (FPS)	Vel Head / SF Ave	Energy Grd.El. / HF	Super Elev / SE Dpth	Critical Depth / Froude N	Flow Top Width / Norm Dp	Height/Dia.-FT / "N"	Base Wt or I.D. / X-Fall	ZL / ZR	No Wth Prs/Pip / Type Ch
1156.210	59.950	3.890	63.840	11.18	3.56	.20	64.04	.00	1.20	.00	2.000	.000	.00	1 .0
46.270	.0201					.0024	.11	3.89	.00	.81	.013	.00	.00	PIPE
1202.480	60.880	3.083	63.963	11.18	3.56	.20	64.16	.00	1.20	.00	2.000	.000	.00	1 .0
JUNCT STR	.1500					.0012	.00	.00	.00		.013	.00	.00	PIPE
1206.480	61.480	2.682	64.162	.71	.40	.00	64.16	.00	.31	.00	1.500	.000	.00	1 .0
40.008	.0296					.0000	.00	2.68	.00	.20	.013	.00	.00	PIPE
1246.488	62.664	1.500	64.164	.71	.40	.00	64.17	.00	.31	.00	1.500	.000	.00	1 .0
4.693	.0296					.0000	.00	1.50	.00	.20	.013	.00	.00	PIPE
1251.180	62.803	1.360	64.163	.71	.42	.00	64.17	.00	.31	.87	1.500	.000	.00	1 .0
2.698	.0296					.0000	.00	1.36	.05	.20	.013	.00	.00	PIPE
1253.878	62.882	1.280	64.163	.71	.44	.00	64.17	.00	.31	1.06	1.500	.000	.00	1 .0
2.257	.0296					.0000	.00	1.28	.06	.20	.013	.00	.00	PIPE
1256.136	62.949	1.213	64.162	.71	.46	.00	64.17	.00	.31	1.18	1.500	.000	.00	1 .0
1.952	.0296					.0000	.00	1.21	.07	.20	.013	.00	.00	PIPE
1258.088	63.007	1.155	64.162	.71	.49	.00	64.17	.00	.31	1.26	1.500	.000	.00	1 .0
1.782	.0296					.0001	.00	1.16	.08	.20	.013	.00	.00	PIPE
1259.870	63.060	1.102	64.162	.71	.51	.00	64.17	.00	.31	1.32	1.500	.000	.00	1 .0
1.612	.0296					.0001	.00	1.10	.09	.20	.013	.00	.00	PIPE

MH17
RIM=67.38

61

Station / L/Elem	Invert Elev / Ch Slope	Depth (FT)	Water Elev	Q (CFS)	Vel (FPS)	Vel Head / SF Ave	Energy Grd.El. / HF	Super Elev / SE Dpth	Critical Depth / Froude N	Flow Top Width / Norm Dp	Height/Dia.-FT / "N"	Base Wt or I.D. / X-Fall	ZL / ZR	No Wth Prs/Pip / Type Ch
1261.482	63.107	1.054	64.162	.71	.53	.00	64.17	.00	.31	1.37	1.500	.000	.00	1 .0
1.475	.0296					.0001	.00	1.05	.10	.20	.013	.00	.00	PIPE
1262.958	63.151	1.010	64.161	.71	.56	.00	64.17	.00	.31	1.41	1.500	.000	.00	1 .0
1.407	.0296					.0001	.00	1.01	.10	.20	.013	.00	.00	PIPE
1264.364	63.193	.968	64.161	.71	.59	.01	64.17	.00	.31	1.44	1.500	.000	.00	1 .0
1.304	.0296					.0001	.00	.97	.11	.20	.013	.00	.00	PIPE
1265.668	63.231	.929	64.160	.71	.62	.01	64.17	.00	.31	1.46	1.500	.000	.00	1 .0
1.201	.0296					.0001	.00	.93	.12	.20	.013	.00	.00	PIPE
1266.869	63.267	.893	64.160	.71	.65	.01	64.17	.00	.31	1.47	1.500	.000	.00	1 .0
1.165	.0296					.0001	.00	.89	.13	.20	.013	.00	.00	PIPE
1268.034	63.301	.858	64.159	.71	.68	.01	64.17	.00	.31	1.48	1.500	.000	.00	1 .0
1.062	.0296					.0001	.00	.86	.14	.20	.013	.00	.00	PIPE
1269.096	63.333	.826	64.159	.71	.71	.01	64.17	.00	.31	1.49	1.500	.000	.00	1 .0
1.026	.0296					.0001	.00	.83	.15	.20	.013	.00	.00	PIPE
1270.122	63.363	.795	64.158	.71	.75	.01	64.17	.00	.31	1.50	1.500	.000	.00	1 .0
.990	.0296					.0002	.00	.80	.17	.20	.013	.00	.00	PIPE
1271.112	63.392	.765	64.157	.71	.78	.01	64.17	.00	.31	1.50	1.500	.000	.00	1 .0
.920	.0296					.0002	.00	.77	.18	.20	.013	.00	.00	PIPE

29

Station / L/Elem	Invert Elev / Ch Slope	Depth (FT)	Water Elev	Q (CFS)	Vel (FPS)	Vel Head / SF Ave	Energy Grd.El. / HF	Super Elev / SE Dpth	Critical Depth / Froude N	Flow Top Width / Norm Dp	Height/Dia.-FT / "N"	Base Wt or I.D. / X-Fall	ZL / ZR	No Wth Prs/Pip / Type Ch
1272.031	63.420	.737	64.157	.71	.82	.01	64.17	.00	.31	1.50	1.500	.000	.00	1 .0
.883	.0296					.0002	.00	.74	.19	.20	.013	.00	.00	PIPE
1272.915	63.446	.710	64.156	.71	.86	.01	64.17	.00	.31	1.50	1.500	.000	.00	1 .0
.846	.0296					.0002	.00	.71	.20	.20	.013	.00	.00	PIPE
1273.761	63.471	.684	64.155	.71	.90	.01	64.17	.00	.31	1.49	1.500	.000	.00	1 .0
.775	.0296					.0003	.00	.68	.22	.20	.013	.00	.00	PIPE
1274.536	63.494	.660	64.154	.71	.95	.01	64.17	.00	.31	1.49	1.500	.000	.00	1 .0
.772	.0296					.0003	.00	.66	.24	.20	.013	.00	.00	PIPE
1275.308	63.517	.636	64.153	.71	.99	.02	64.17	.00	.31	1.48	1.500	.000	.00	1 .0
.700	.0296					.0003	.00	.64	.25	.20	.013	.00	.00	PIPE
1276.008	63.537	.614	64.151	.71	1.04	.02	64.17	.00	.31	1.48	1.500	.000	.00	1 .0
.696	.0296					.0004	.00	.61	.27	.20	.013	.00	.00	PIPE
1276.704	63.558	.592	64.150	.71	1.09	.02	64.17	.00	.31	1.47	1.500	.000	.00	1 .0
.623	.0296					.0004	.00	.59	.29	.20	.013	.00	.00	PIPE
1277.327	63.576	.572	64.148	.71	1.15	.02	64.17	.00	.31	1.46	1.500	.000	.00	1 .0
.618	.0296					.0005	.00	.57	.31	.20	.013	.00	.00	PIPE
1277.944	63.595	.552	64.147	.71	1.20	.02	64.17	.00	.31	1.45	1.500	.000	.00	1 .0
.578	.0296					.0006	.00	.55	.33	.20	.013	.00	.00	PIPE

63

Station / L/Elem	Invert Elev / Ch Slope	Depth (FT)	Water Elev	Q (CFS)	Vel (FPS)	Vel Head / SF Ave	Energy Grd.El. / HF	Super Elev / SE Dpth	Critical Depth / Froude N	Flow Top Width / Norm Dp	Height/ Dia.-FT / "N"	Base Wt or I.D. / X-Fall	ZL / ZR	No Wth Prs/Pip / Type Ch
1278.522	63.612	.533	64.145	.71	1.26	.02	64.17	.00	.31	1.44	1.500	.000	.00	1 .0
.572	.0296					.0007	.00	.53	.35	.20	.013	.00	.00	PIPE
1279.094	63.629	.514	64.143	.71	1.32	.03	64.17	.00	.31	1.42	1.500	.000	.00	1 .0
.495	.0296					.0008	.00	.51	.38	.20	.013	.00	.00	PIPE
1279.589	63.643	.497	64.140	.71	1.39	.03	64.17	.00	.31	1.41	1.500	.000	.00	1 .0
.488	.0296					.0009	.00	.50	.41	.20	.013	.00	.00	PIPE
1280.077	63.658	.480	64.138	.71	1.45	.03	64.17	.00	.31	1.40	1.500	.000	.00	1 .0
.445	.0296					.0010	.00	.48	.43	.20	.013	.00	.00	PIPE
1280.521	63.671	.464	64.135	.71	1.53	.04	64.17	.00	.31	1.39	1.500	.000	.00	1 .0
.133	.0296					.0011	.00	.46	.46	.20	.013	.00	.00	PIPE
1280.654	63.675	.448	64.123	.71	1.60	.04	64.16	.00	.31	1.37	1.500	.000	.00	1 .0
HYDRAULIC JUMP														
1280.654	63.675	.203	63.878	.71	4.96	.38	64.26	.00	.31	1.03	1.500	.000	.00	1 .0
287.428	.0296					.0296	8.50	.20	2.34	.20	.013	.00	.00	PIPE
1568.083	72.180	.203	72.383	.71	4.96	.38	72.76	.00	.31	1.03	1.500	.000	.00	1 .0
14.980	.0296					.0277	.41	.20	2.34	.20	.013	.00	.00	PIPE
1583.063	72.623	.209	72.832	.71	4.73	.35	73.18	.00	.31	1.04	1.500	.000	.00	1 .0
4.505	.0296					.0241	.11	.21	2.19	.20	.013	.00	.00	PIPE

64

Station / L/Elem	Invert Elev / Ch Slope	Depth (FT)	Water Elev	Q (CFS)	Vel (FPS)	Vel Head / SF Ave	Energy Grd.El. / HF	Super Elev / SE Dpth	Critical Depth / Froude N	Flow Top Width / Norm Dp	Height/Dia.-FT / "N"	Base Wt or I.D. / X-Fall	ZL / ZR	No Wth Prs/Pip / Type Ch
1587.568	72.756	.216	72.972	.71	4.51	.32	73.29	.00	.31	1.05	1.500	.000	.00	1 .0
2.437	.0296					.0211	.05	.22	2.05	.20	.013	.00	.00	PIPE
1590.005	72.828	.224	73.052	.71	4.30	.29	73.34	.00	.31	1.07	1.500	.000	.00	1 .0
1.710	.0296					.0184	.03	.22	1.93	.20	.013	.00	.00	PIPE
1591.715	72.879	.231	73.110	.71	4.10	.26	73.37	.00	.31	1.08	1.500	.000	.00	1 .0
1.164	.0296					.0161	.02	.23	1.81	.20	.013	.00	.00	PIPE
1592.879	72.913	.239	73.152	.71	3.91	.24	73.39	.00	.31	1.10	1.500	.000	.00	1 .0
.873	.0296					.0141	.01	.24	1.69	.20	.013	.00	.00	PIPE
1593.751	72.939	.247	73.186	.71	3.73	.22	73.40	.00	.31	1.11	1.500	.000	.00	1 .0
.670	.0296					.0123	.01	.25	1.59	.20	.013	.00	.00	PIPE
1594.421	72.959	.255	73.214	.71	3.55	.20	73.41	.00	.31	1.13	1.500	.000	.00	1 .0
.467	.0296					.0107	.01	.26	1.49	.20	.013	.00	.00	PIPE
1594.888	72.973	.264	73.237	.71	3.39	.18	73.41	.00	.31	1.14	1.500	.000	.00	1 .0
.356	.0296					.0094	.00	.26	1.39	.20	.013	.00	.00	PIPE
1595.244	72.983	.273	73.256	.71	3.23	.16	73.42	.00	.31	1.16	1.500	.000	.00	1 .0
.267	.0296					.0082	.00	.27	1.31	.20	.013	.00	.00	PIPE
1595.511	72.991	.282	73.273	.71	3.08	.15	73.42	.00	.31	1.17	1.500	.000	.00	1 .0
.195	.0296					.0071	.00	.28	1.22	.20	.013	.00	.00	PIPE

Station / L/Elem	Invert Elev / Ch Slope	Depth (FT)	Water Elev	Q (CFS)	Vel (FPS)	Vel Head / SF Ave	Energy Grd.El. / HF	Super Elev / SE Dpth	Critical Depth / Froude N	Flow Top Width / Norm Dp	Height/Dia.-FT / "N"	Base Wt or I.D. / X-Fall	ZL / ZR	No Wth Prs/Pip Type Ch
1595.707	72.997	.291	73.288	.71	2.94	.13	73.42	.00	.31	1.19	1.500	.000	.00	1 .0
.093	.0296					.0062	.00	.29	1.15	.20	.013	.00	.00	PIPE
1595.800	73.000	.301	73.301	.71	2.80	.12	73.42	.00	.31	1.20	1.500	.000	.00	1 .0
.010	.0296					.0054	.00	.30	1.07	.20	.013	.00	.00	PIPE
1595.810	73.000	.313	73.313	.71	2.66	.11	73.42	.00	.31	1.22	1.500	.000	.00	1 .0

MH 18
RIM=80.86

SCANNED BY PLANNING

LEGEND

NEW PERMANENT PAVEMENT THIS PROJECT

SIDEWALK RAMP DETAIL

SCALE: 1" = 30'

NOTES

1. ALL STATIONING IS CENTERLINE STATIONING.
2. ALL CURB ACCESS RAMPS ARE CASE II UNLESS OTHER WISE NOTED.
3. SEE DETAIL THIS SHEET FOR CURB ACCESS RAMP.

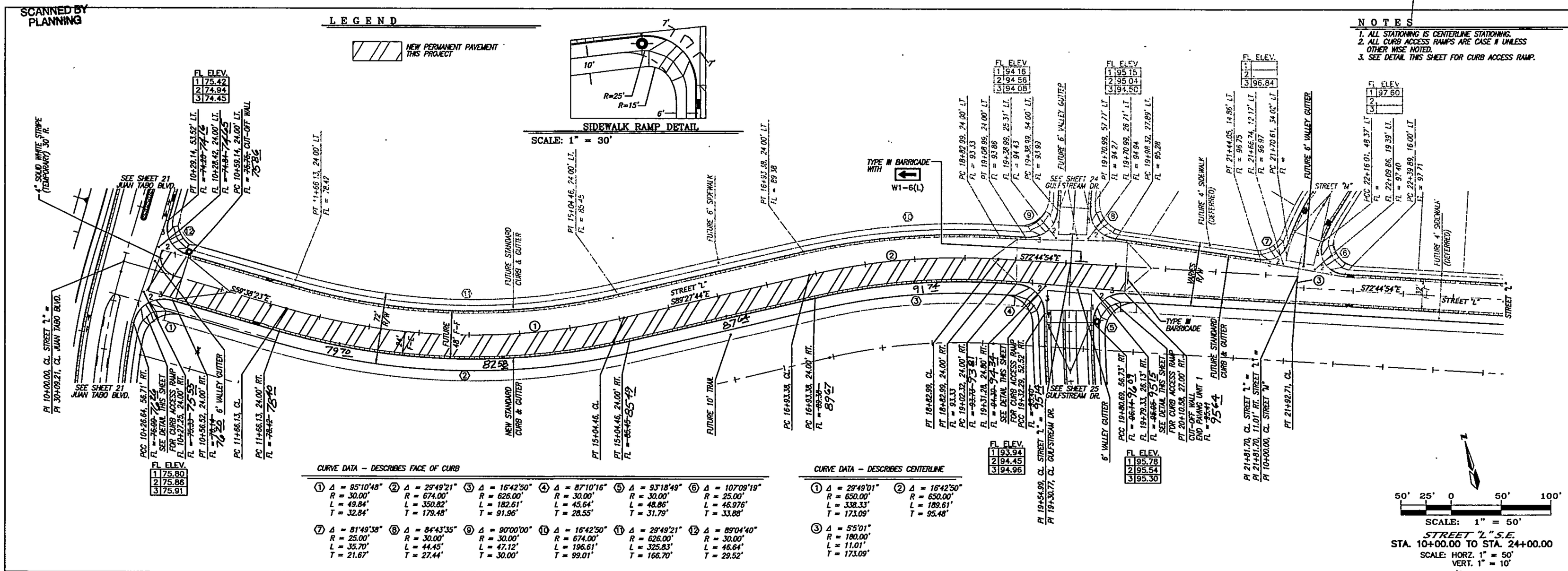

CURVE DATA – DESCRIBES FACE OF CURB

① Δ = 95°10'48"	② Δ = 29°49'21"	③ Δ = 16°42'50"	④ Δ = 87°10'16"	⑤ Δ = 93°18'49"	⑥ Δ = 107°09'19"
R = 30.00'	R = 674.00'	R = 626.00'	R = 30.00'	R = 30.00'	R = 25.00'
L = 49.84'	L = 350.82'	L = 182.61'	L = 45.64'	L = 48.86'	L = 46.976'
T = 32.84'	T = 179.48'	T = 91.96'	T = 28.55'	T = 31.79'	T = 33.88'
⑦ Δ = 81°49'38"	⑧ Δ = 84°43'35"	⑨ Δ = 90°00'00"	⑩ Δ = 16°42'50"	⑪ Δ = 29°49'21"	⑫ Δ = 89°04'40"
R = 25.00'	R = 30.00'	R = 30.00'	R = 674.00'	R = 626.00'	R = 30.00'
L = 35.70'	L = 44.45'	L = 47.12'	L = 196.61'	L = 325.83'	L = 46.64'
T = 21.67'	T = 27.44'	T = 30.00'	T = 99.01'	T = 166.70'	T = 29.52'

CURVE DATA – DESCRIBES CENTERLINE

① Δ = 29°49'01"	② Δ = 16°42'50"
R = 650.00'	R = 650.00'
L = 338.33'	L = 189.61'
T = 173.09'	T = 95.48'
③ Δ = 5°51'01"	
R = 180.00'	
L = 11.01'	
T = 173.09'	

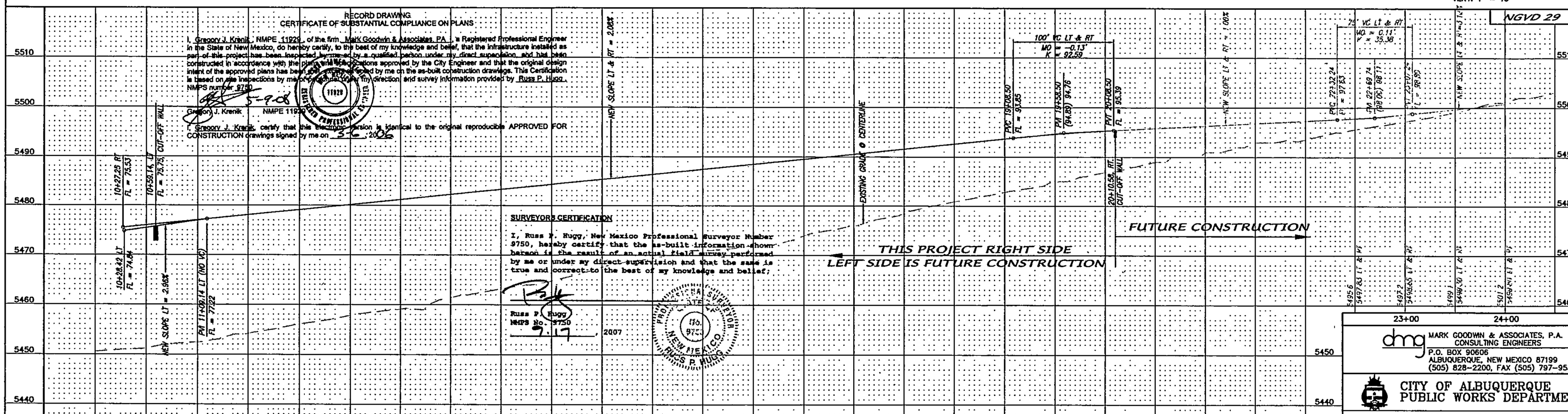

RECORD DRAWING
CERTIFICATE OF SUBSTANTIAL COMPLIANCE ON PLANS

I, Gregory J. Krenik, NMPE 11929, of the firm Mark Goodwin & Associates PA, a Registered Professional Engineer in the State of New Mexico, do hereby certify, to the best of my knowledge and belief, that the infrastructure installed as part of this project has been inspected by me or by a qualified person under my direct supervision, and has been constructed in accordance with the plans and specifications approved by the City Engineer and that the original design intent of the approved plans has been [illegible] and signed by me on the as-built construction drawings. This Certification is based on the inspections by me or [illegible] under my direction, and survey information provided by Russ P. Hugg, NMPS number 9750.

Gregory J. Krenik NMPE 11929

I, Gregory J. Krenik, certify that this electronic version is identical to the original reproducible APPROVED FOR CONSTRUCTION drawings signed by me on 5-2-2006

REGISTERED PROFESSIONAL ENGINEER 11929

SURVEYOR'S CERTIFICATION

I, Russ P. Hugg, New Mexico Professional Surveyor Number 9750, hereby certify that the as-built information shown hereon is the result of an actual field survey performed by me or under my direct supervision and that the same is true and correct to the best of my knowledge and belief.

Russ P. Hugg
NMPS No. 9750
9.17 2007

PROFESSIONAL SURVEYOR NEW MEXICO 9750 RUSS P. HUGG

NO.	BY	DATE	REMARKS	BY	DATE
			DESIGN	GJK	07/05
			REVISIONS	ACH	07/05

DESIGNED BY GJK DATE 07/05
DRAWN BY ACH DATE 07/05
CHECKED BY DMG DATE 07/05

dmg MARK GOODWIN & ASSOCIATES, P.A.
CONSULTING ENGINEERS
P.O. BOX 90606
ALBUQUERQUE, NEW MEXICO 87199
(505) 828-2200, FAX (505) 797-9539

CITY OF ALBUQUERQUE
PUBLIC WORKS DEPARTMENT

TITLE: JUAN TABO HILLS - UNIT 1
STREET "L"
PAVING IMPROVEMENTS

DESIGN REVIEW COMMITTEE: APPROVED MAR 24 2006 DESIGN REVIEW COMMITTEE

CITY ENGINEER APPROVAL: MAR 27 2006 CITY ENGINEER

LAST DESIGN UPDATE: MO /DAY/YR. MO /DAY/YR.

CITY PROJECT NO. 756183 | ZONE MAP NO. M-21 & M-22 | SHEET 41 OF 83

AS BUILT INFORMATION
CONTRACTOR Sauer Bros DATE 5/8/07
WORK STAKED BY SURV TEK DATE 5/8/07
INSPECTED BY ASG DATE 5/8/07
FIELD VERIFICATION BY SURVTEK DATE 5/16/07
DRAWINGS CORRECTED BY SURV TEK DATE 5/16/07
MICRO-FILM INFORMATION
RECORDED BY DATE
NO.

BENCH MARKS
STATION "S-022" IS LOCATED 0.7 MI. SE OF DOWNTOWN ALBUQUERQUE SUBDIVISION AREA. STATION IS 600 FT. EAST OF MUNICIPAL LIMITS LINE. 17.8' SE OF POWER POLE #EST & 186.0' NW OF POWER POLE #60. STATION IS A STANDARD AGS BRASS DISC SET IN A CONCRETE MONUMENT IN THE GROUND. STATION IS STAMPED "S-022, 1973AGS". Y= 424,017.61, X= 1,475,700.07, (NAD 1927) Z= 5594.518 (SLD 1929)

SURVEY INFORMATION
FIELD NOTES
NO. BY DATE

ENGINEER'S SEAL

A02JOBS\A2079 4 HILLS\UNIT-1\PLANS\ACAD-PP-30/03-08-06/ACH RDQ SPS

F:\A02JOBS\A2079 4 HILLS\UNIT-1\PLANS\ACAD-PP-30.dwg, 3/6/2006 3:54:23 PM, chris, Designlet 1050C (temporary)0390 pc3

SCANNED BY PLANNING

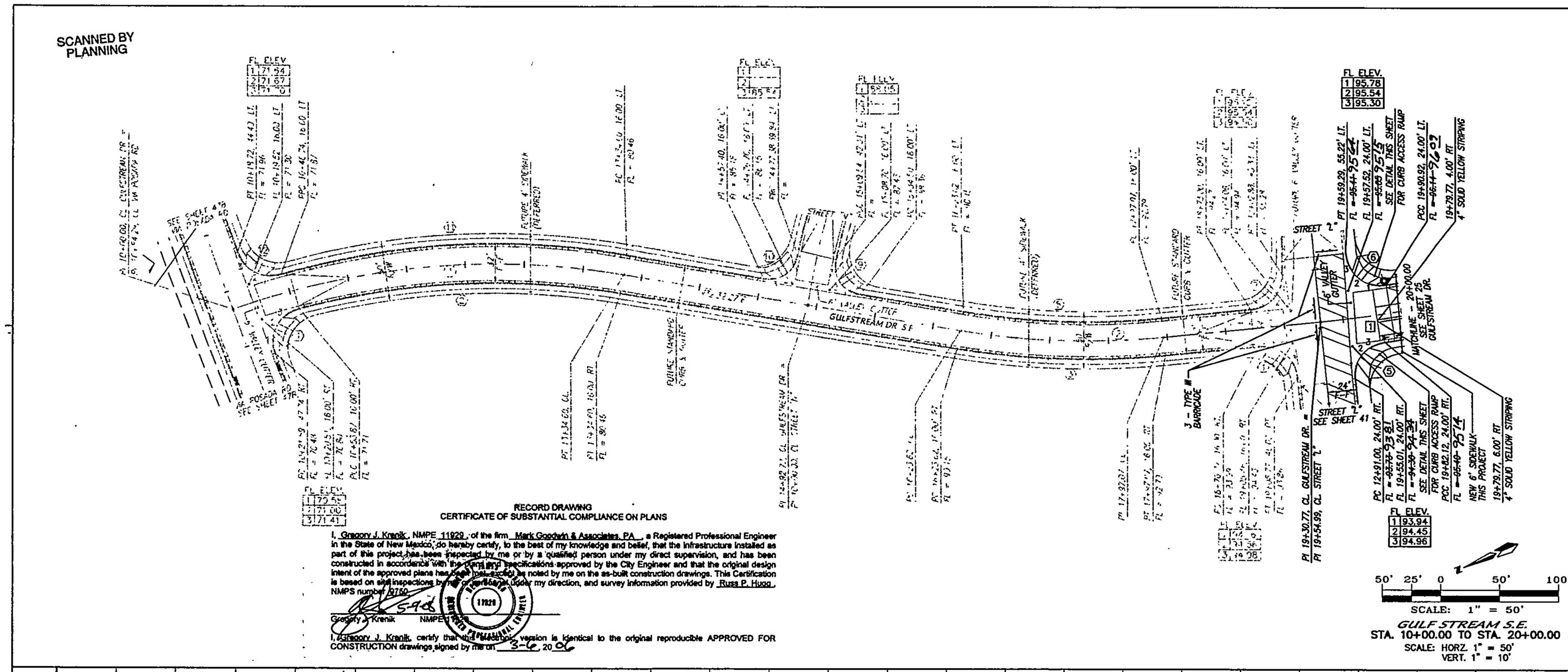

RECORD DRAWING
CERTIFICATE OF SUBSTANTIAL COMPLIANCE ON PLANS

I, Gregory J. Kranik, NMPE 11929, of the firm Mark Goodwin & Associates PA, a Registered Professional Engineer in the State of New Mexico, do hereby certify, to the best of my knowledge and belief, that the infrastructure installed as part of this project has been inspected by me or by a qualified person under my direct supervision, and has been constructed in accordance with the construction specifications approved by the City Engineer and that the original design intent of the approved plans has been maintained, except as noted by me on the as-built construction drawings. This Certification is based on site inspections by me or by a qualified inspector under my direction, and survey information provided by Russ P. Hugg, NMPS number 9750.

Gregory J. Kranik NMPE 11929

I, Gregory J. Kranik, certify that this reproducible version is identical to the original reproducible APPROVED FOR CONSTRUCTION drawings signed by me on 3-6, 20 06

GULF STREAM S.E.
STA. 10+00.00 TO STA. 20+00.00
SCALE: HORZ. 1" = 50'
VERT. 1" = 10'

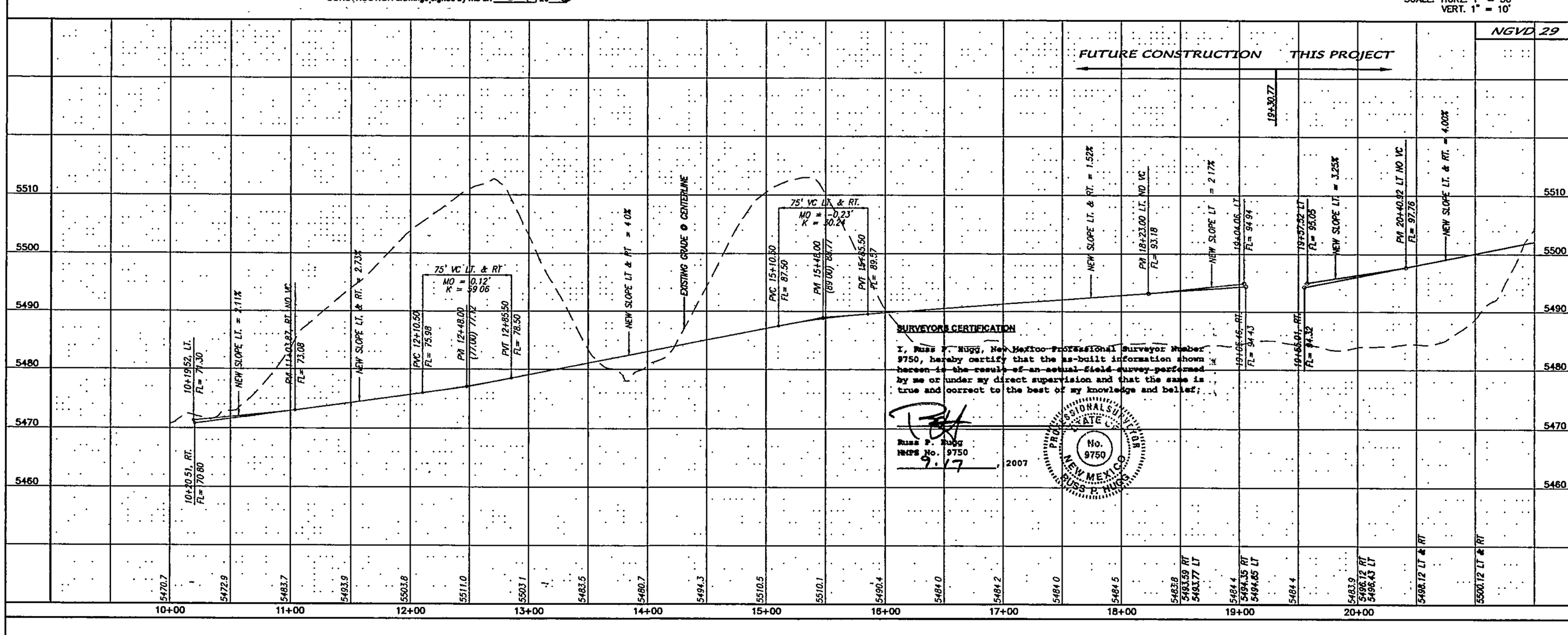

SURVEYOR'S CERTIFICATION

I, Russ P. Hugg, New Mexico Professional Surveyor Number 9750, hereby certify that the as-built information shown hereon is the result of an actual field survey performed by me or under my direct supervision and that the same is true and correct to the best of my knowledge and belief.

Russ P. Hugg
NMPS No. 9750
9.17, 2007

A02JOBS/A2079 4 HILLS/UNIT-1/PLANS/ACAD-PP-23/03-07-06/ACH SPS

NOTES

1. ALL STATIONING IS CENTERLINE STATIONING.
2. ALL CURB ACCESS RAMPS ARE CASE II, UNLESS OTHERWISE NOTED.

CURVE DATA – DESCRIBES FACE OF CURB

⑤ Δ = 87°10'16"	R = 30.00'	L = 45.64'	T = 28.55'
⑥ Δ = 93°18'49"	R = 30.00'	L = 48.86'	T = 31.79'

CURVE DATA – DESCRIBES CENTERLINE

CURVE DATA – STRIPING

1 Δ = 180°00'00"
R = 1.00'
L = 3.14'
T = N/A
(BULLNOSE STRIPE)

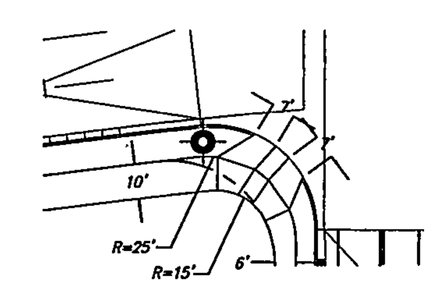

SIDEWALK RAMP DETAIL
SCALE: 1" = 30'

AS BUILT INFORMATION
CONTRACTOR Sauls Bros
STAKED BY SURV TEK DATE 04/01
INSPECTOR'S ACCEPTANCE BY AGA DATE 5/01
FIELD VERIFICATION BY SURV TEK DATE 04/01
DRAWINGS CORRECTED BY SURV TEK DATE 06/01

BENCH MARKS
STATION "5-A22" IS LOCATED 8.7 MI. SE OF DOWNTOWN ALBUQUERQUE ON THE EAST SIDE OF THE MUNICIPAL LIMITS LINE IN THE FOUR HILLS SUBDIVISION ABQ. STATION IS 600 FT. EAST OF MUNICIPAL LIMITS LINE. 77.0' SE OF POWER POLE #5ST & 180.0' NW OF POWER POLE #60. STATION IS A STANDARD ACS BRASS DISK SET IN A CONCRETE MONUMENT IN THE GROUND. STATION IS STAMPED "5-A22, 1973ACS". X= 424,017.61, Y= 1,475,700.07, (NAD 1927), Z= 5594.518 (SLD 1929)

MICRO-FILM INFORMATION
RECORDED BY DATE
NO.

SURVEY INFORMATION
FIELD NOTES

NO.	BY	DATE

ENGINEER'S SEAL

NO.	DATE	REMARKS / REVISIONS	BY

		DATE
DESIGNED BY	GJK	07/05
DRAWN BY	ACH	07/05
CHECKED BY	DMG	07/05

dmg MARK GOODWIN & ASSOCIATES, P.A.
CONSULTING ENGINEERS
P.O. BOX 90606
ALBUQUERQUE, NEW MEXICO 87199
(505) 828-2200, FAX (505) 797-9539

CITY OF ALBUQUERQUE
PUBLIC WORKS DEPARTMENT

TITLE: JUAN TABO HILLS - UNIT 1
GULF STREAM S.E.
PAVING IMPROVEMENTS

DESIGN REVIEW COMMITTEE: APPROVED MAR 24 2006 DESIGN REVIEW COMMITTEE
CITY ENGINEER APPROVAL: APPROVED MAR 27 2006 CITY ENGINEER
LAST DESIGN UPDATE | MO /DAY/YR | MO /DAY/YR

CITY PROJECT NO.	ZONE MAP NO.	SHEET	OF
756183	M-21 & M-22	24	83

F:\A02JOBS\A2079 4 HILLS\UNIT-1\PLANS\ACAD-PP-23.dwg, 3/7/2006 3:36:25 PM, Design-let 1050C (MyJet).pc3

SCANNED BY PLANNING

RECORD DRAWINGS

NOTES

1. ALL STATIONING IS CENTERLINE STATIONING.

LEGEND

41 — HEC-RAS CROSS

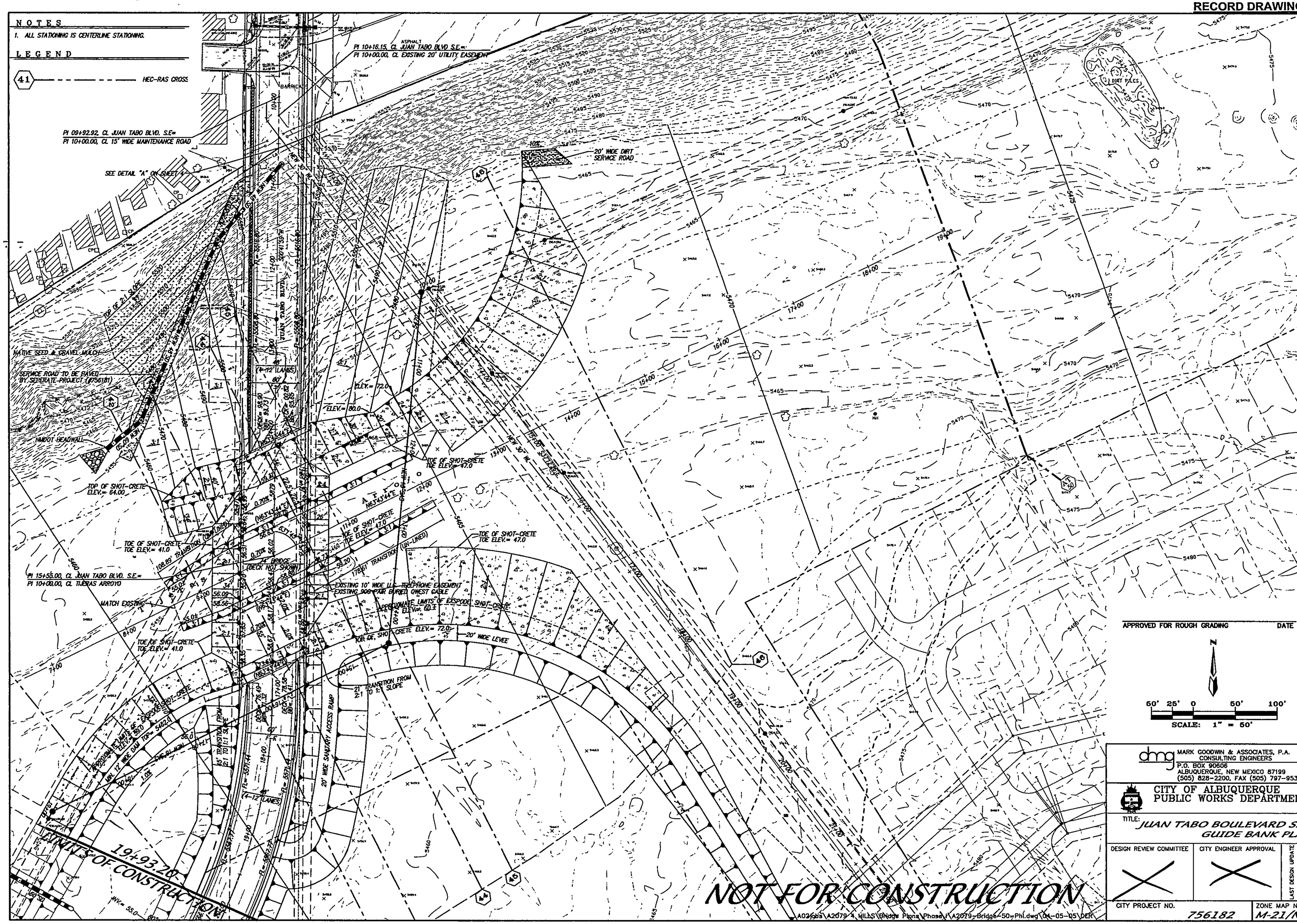

APPROVED FOR ROUGH GRADING DATE

N

50' 25' 0 50' 100'

SCALE: 1" = 50'

AS BUILT INFORMATION	
CONTRACTOR	AUI, INC
STAKED BY	Cartesian Surveys Inc. DATE 3/05
INSPECTOR'S CHECKS BY	MGA DATE 4/07
FIELD VERIFICATION BY	Cartesian Surveys Inc. DATE 3/05
FIELD DRAWINGS CORRECTED BY	MGA DATE 4/07
MICRO-FILM INFORMATION	
RECORDED BY	DATE
NO.	

BENCH MARKS

STATION "5-J22" IS LOCATED 8.7 MI. SE OF DONNTOWN ALBUQUERQUE ON THE EAST SIDE OF THE MUNICIPAL LIMITS LINE IN THE FOUR HILLS SUBDIVISION AREA. STATION IS 600 FT. EAST OF MUNICIPAL LIMITS LINE, 77.6' SE OF POWER POLE #257 & 108.0' NW OF POWER POLE #261. STATION IS A STANDARD AGS BRASS DISK SET IN A CONCRETE MONUMENT IN THE GROUND. STATION IS STAMPED "5-J22, 1975ALCS". X= 424,017.61, Y= 1,473,700.07, (NAD 1927), Z= 5594.518 (SLD 1929).

SURVEY INFORMATION

NO.	FIELD NOTES BY	DATE

ENGINEER'S SEAL

JAMES D. HUGHES NEW MEXICO 14674 REGISTERED PROFESSIONAL ENGINEER 3-18-05

NO.	DATE	REMARKS REVISIONS	BY

DESIGNED BY	JDH	DATE	12/04
DRAWN BY	DER	DATE	12/04
CHECKED BY	DMG	DATE	12/04

dmg MARK GOODWIN & ASSOCIATES, P.A.
CONSULTING ENGINEERS
P.O. BOX 90606
ALBUQUERQUE, NEW MEXICO 87199
(505) 828-2200, FAX (505) 797-9539

CITY OF ALBUQUERQUE
PUBLIC WORKS DEPARTMENT

TITLE: JUAN TABO BOULEVARD S.E. - PHASE I
GUIDE BANK PLAN

DESIGN REVIEW COMMITTEE	CITY ENGINEER APPROVAL	LAST DESIGN UPDATE	MO/DAY/YR	MO/DAY/YR.
X	X			

CITY PROJECT NO.	ZONE MAP NO.	SHEET	OF
756182	M-21/N-21	3	6

A02\jobs\A2079 4 HILLS\Bridge Plans\Phase I\A2079-Bridge-50-Ph1.dwg \04-05-05 DER

F:\A02JOBS\A2079 4 HILLS\Bridge Plans\Phase I\A2079-Bridge-50-Ph1.dwg, 4/5/2005 3:08:44 PM, PLOTTED BY: DER

RECORD DRAWINGS

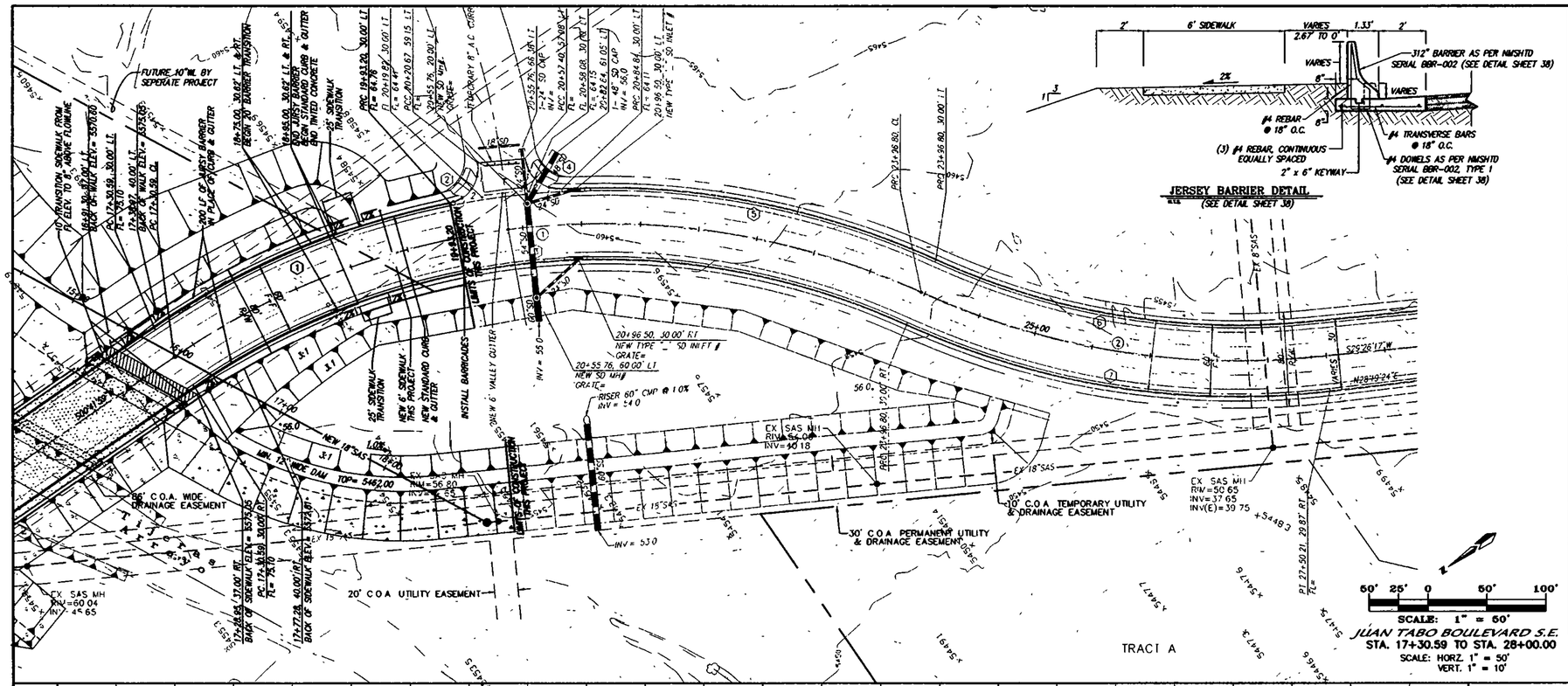

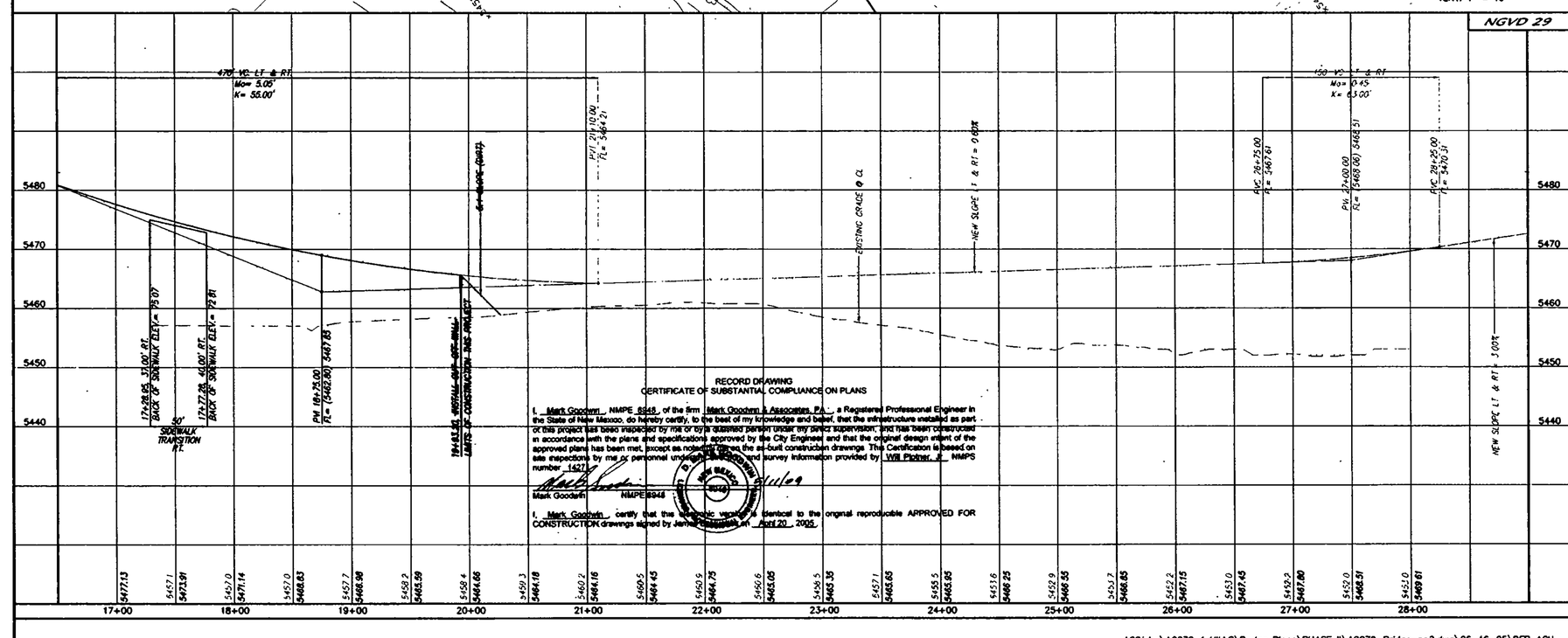

NOTES

1. ALL STATIONING IS CENTERLINE STATIONING.
2. ALL 4' VALLEY GUTTERS PER CITY OF ALBUQUERQUE STANDARD DRAWING 2421 AT KNUCKLES AND 6' VALLEY GUTTERS PER CITY OF ALBUQUERQUE STANDARD DRAWING 2420 AT ALL INTERSECTIONS, EXCEPT 16' VALLEY GUTTERS PER ALBUQUERQUE STANDARD DRAWING 2422.
3. TRANSITION FROM ROLL CURB TO STANDARD CURB SHALL BE PER CITY OF ALBUQUERQUE DRAWING 2418, UNLESS OTHERWISE SPECIFIED
4. ALL HANDICAP RAMPS TO BE CASE II PER CITY OF ALBUQUERQUE STANDARD DRAWING 2441. WHERE GRADES DO NOT PERMIT A MAXIMUM SLOPE OF 12:1 TO BE MAINTAINED WITHIN THE LENGTH AS SPECIFIED, THEN THE "F" LENGTH AS SHOWN IN DRAWING 2441 SHALL MUST BE INCREASED TO MAINTAIN A SLOPE < 12:1
5. TRANSITION SECTION FROM FULL CROWN TO NO CROWN TO BE A MINIMUM OF 50' AND TRANSITIONS SECTIONS FROM FULL TO HALF CROWN TO BE A MINIMUM OF 25', PER CITY OF ALBUQUERQUE STANDARD DRAWING 2401.
6. ALL PROPOSED SIDEWALKS ARE PER CITY OF ALBUQUERQUE STANDARD DETAIL #2430.
7. SOIL NOT HAVING A MINIMUM R-VALUE OF 60 WILL BE REMOVED TO A DEPTH OF 2 FEET AND REPLACED BY THE CONTRACTOR WITH A SUITABLE MATERIAL OR PAVEMENT SECTION SHALL BE DESIGNED BY THE CONSULTANT ACCOMADATING THE EXISTING R-VALUE PER COA STANDARD SPECIFICATIONS.

CURVE DATA - DESCRIBES CENTERLINE

① Δ = 58°43'27" R = 650.00' L = 666.21' T = 365.69'
② Δ = 29°59'09" R = 650.00' L = 340.18' T = 174.08'

CURVE DATA - DESCRIBES FACE OF NEW CURB

① Δ = 23°08'52" R = 680.00' L = 274.72' T = 139.26'
② Δ = 87°29.59" R = 30.00' L = 45.64' T = 28.55
③ Δ = 58°43'27" R = 620.00' L = 635.46' T = 348.81'
④ Δ = 84°55'40" R = 30.00' L = 44.47' T = 27.46'
⑤ Δ = 27°29'54" R = 650.00' L = 326.36' T = 166.36
⑥ Δ = 29°59'09" R = 620.00' L = 324.48' T = 166.02
⑦ Δ = 31°06'02" R = 680.00' L = 369.11' T = 189.22

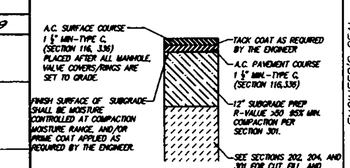

FLEXIBLE PAVEMENT SECTION (2405A)
NTS.

RECORD DRAWING
CERTIFICATE OF SUBSTANTIAL COMPLIANCE ON PLANS

I, Mark Goodwin, NMPE 6948, of the firm Mark Goodwin & Associates, P.A., a Registered Professional Engineer in the State of New Mexico, do hereby certify, to the best of my knowledge and belief, that the infrastructure installed as part of this project has been inspected by me or by a qualified person under my direct supervision, and has been constructed in accordance with the plans and specifications approved by the City Engineer, and that the original design intent of the approved plans has been met, except as noted on the as-built construction drawings. This Certification is based on site inspections by me or personnel under my supervision and survey information provided by Will Plotner, Jr. NMPS number 14271.

Mark Goodwin NMPE 6948 Date 6/16/09

I, Mark Goodwin, certify that the electronic version is identical to the original reproducible APPROVED FOR CONSTRUCTION drawings signed by James D. Hughes on April 20, 2005.

AS BUILT INFORMATION
CONTRACTOR Auze, Inc.
WORK STAKED BY Cartesian Surveys Inc. DATE 8/06
FIELD VERIFIED BY Cartesian Surveys Inc. DATE 8/06
ACCEPTANCE BY M.J.H. DATE 9/07
REDLINE RECEIVED BY Cartesian Surveys Inc. DATE 8/06
DRAWINGS CORRECTED BY M.G. DATE 9/06
MICRO-FILM INFORMATION
MONUMENT IN THE GROUND, STATION IS STAMPED "3-H22, 1972&GS"
RECORDED BY DATE
NO

BENCH MARKS
STATION "3-H22" IS LOCATED 4.7 MI. SE OF DOWNTOWN ALBUQUERQUE ON THE EAST SIDE OF THE MUNICIPAL LIMITS LINE IN THE FOUR HILLS SUBDIVISION AREA. STATION IS 600 FT. EAST OF MUNICIPAL LIMITS LINE, 77.9' SE OF POWER POLE #837 & 108.0' NW OF POWER POLE #80. STATION IS A STANDARD ACS BRASS DISK SET IN A CONCRETE MONUMENT IN THE GROUND. STATION IS STAMPED "3-H22, 1972&GS". X= 424,017.81, Y= 1,473,700.07, (NAD 1927), Z= 5594.518 (SLD 1929).

SURVEY INFORMATION
FIELD NOTES

NO.	BY	DATE

ENGINEER'S SEAL
JAMES D. HUGHES NEW MEXICO REGISTERED PROFESSIONAL ENGINEER 7978

NO	DATE	REMARKS	BY
		REVISIONS	

		DATE
DESIGNED BY	JDH	12/04
DRAWN BY	DER	12/04
CHECKED BY	DMG	12/04

dmg MARK GOODWIN & ASSOCIATES, P.A.
CONSULTING ENGINEERS
P.O. BOX 90606
ALBUQUERQUE, NEW MEXICO 87199
(505) 828-2200, FAX (505) 797-9539

CITY OF ALBUQUERQUE
PUBLIC WORKS DEPARTMENT

TITLE
JUAN TABO BOULEVARD S.E. - PHASE II
PAVING IMPROVEMENTS

DESIGN REVIEW COMMITTEE: APPROVED JUL 27 2005 DESIGN REVIEW COMMITTEE
CITY ENGINEER APPROVAL: APPROVED JUL 28 2005 CITY ENGINEER
LAST DESIGN UPDATE | MO./DAY/YR | MO./DAY/YR

CITY PROJECT NO. 756181 | ZONE MAP NO M-21/N-21 | SHEET 5 OF 46 | C-5

A02jobs\A2079 4 HILLS\Bridge Plans\PHASE II\A2079-Bridge-pp2.dwg\06-16-05\DER ACH

F:\AQ2JOBS\A2079 4 HILLS\Bridge Plans\Phase II\A2079-Bridge-pp2.dwg, 6/16/2005 3:23:06 PM, PLOTTED BY DER

RECORD DRAWINGS

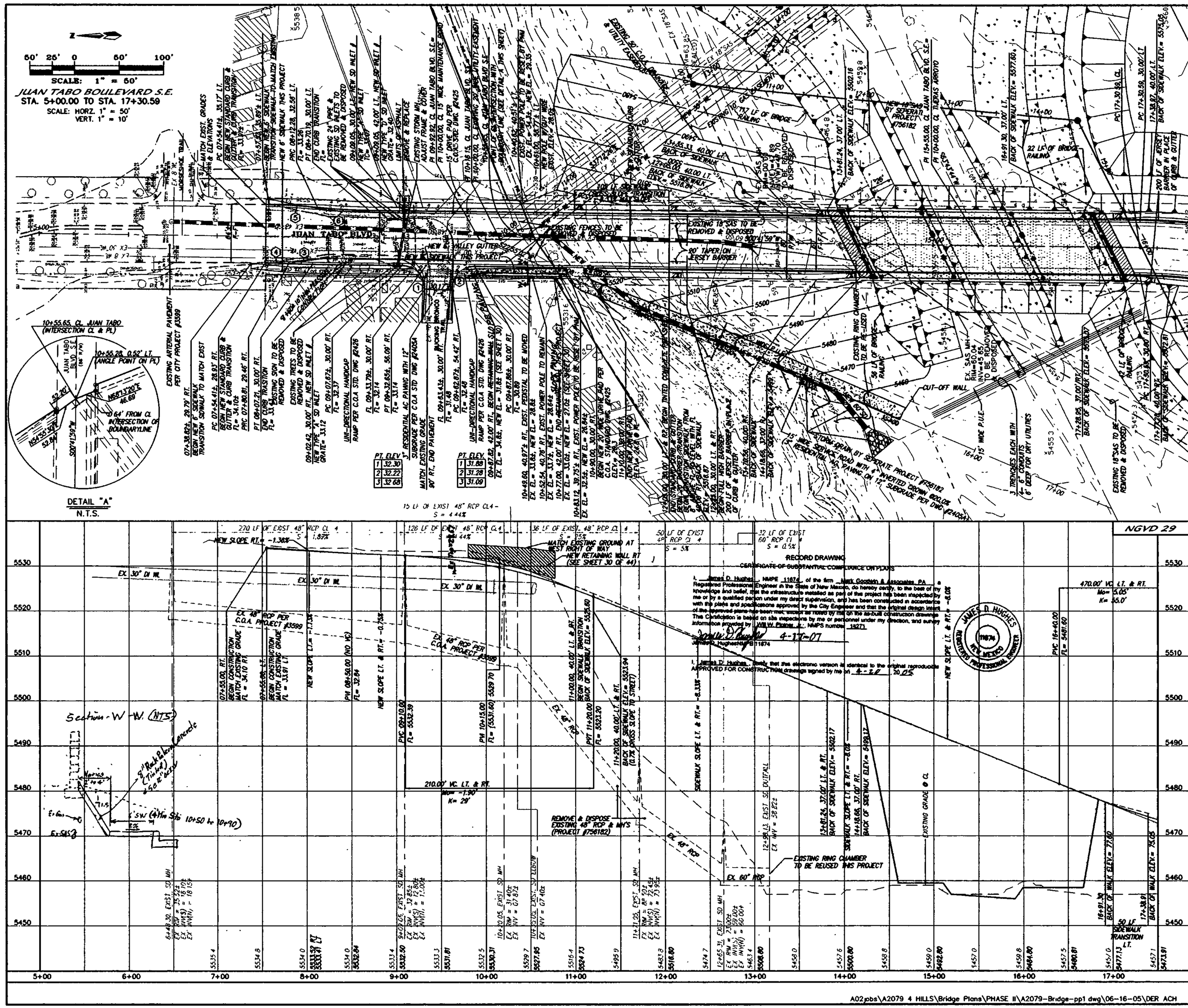

NOTES

1. ALL STATIONING IS CENTERLINE STATIONING.
2. ALL 4' VALLEY GUTTERS PER CITY OF ALBUQUERQUE STANDARD DRAWING 2421 AT KNUCKLES AND 6" VALLEY GUTTERS PER CITY OF ALBUQUERQUE STANDARD DRAWING 2420 AT ALL INTERSECTIONS, EXCEPT 16' VALLEY GUTTERS PER ALBUQUERQUE STANDARD DRAWING 2422.
3. TRANSITION FROM ROLL CURB TO STANDARD CURB SHALL BE PER CITY OF ALBUQUERQUE DRAWING 2418, UNLESS OTHERWISE SPECIFIED.
4. ALL HANDICAP RAMPS TO BE CASE II PER CITY OF ALBUQUERQUE STANDARD DRAWING 2441. TO BE MAINTAINED WITHIN THE LENGTH AS SPECIFIED. THEN THE "7" LENGTH AS SHOWN IN DRAWING 2441 SHALL MUST BE INCREASED TO MAINTAIN A SLOPE < 12:1.
5. TRANSITION SECTION FROM FULL CROWN TO NO CROWN TO BE A MINIMUM OF 50' AND TRANSITIONS SECTIONS FROM FULL TO HALF CROWN TO BE A MINIMUM OF 25', PER CITY OF ALBUQUERQUE STANDARD DRAWING 2401.
6. ALL PROPOSED SIDEWALKS ARE PER CITY OF ALBUQUERQUE STANDARD DETAIL #2430.
7. SOIL NOT HAVING A MINIMUM R-VALUE OF 60 WILL BE REMOVED TO A DEPTH OF 2 FEET AND REPLACED BY THE CONTRACTOR WITH A SUITABLE MATERIAL OR PAVEMENT SECTION SHALL BE DESIGNED BY THE CONSULTANT ACCOMADATING THE EXISTING R-VALUE PER COA STANDARD SPECIFICATIONS.

LEGEND

- 5210 — EXISTING CONTOUR (MAJOR)
- EXISTING CONTOUR (MINOR)
- TC= FL= x 00.0 — EXISTING SPOT ELEVATION
- EXISTING SANITARY SEWER MANHOLE
- EXISTING FENCE
- 10"SD — EXISTING STORM DRAIN
- 8" SAS — EXISTING SAS LINE
- 10" W — EXISTING WATER LINE
- EXISTING STORM MANHOLE
- E — EXISTING ELECTRIC LINE
- EXISTING POWER POLE/GUY WIRE
- NEW STORM MANHOLE
- NEW STORM LINE
- NEW SANITARY SEWER MANHOLE
- NEW 18"SAS — NEW SANITARY SEWER MANHOLE
- NEW CURB & GUTTER
- NEW SIDEWALK
- NEW RIGHT-OF-WAY
- NEW CENTERLINE
- NEW EASEMENTS
- NEW RETAINING WALL
- REMOVE EXISTING CURB & GUTTER, PAVING & CONCRETE SIDEWALK
- NAITIVE SEED & GRAVEL MULCH
- PROPOSED BRIDGE DECK

CURVE DATA – DESCRIBES FACE OF NEW CURB

① L=40.36 R=25.00 Δ=92°29'50" Tan=26.11	② L=38.69 R=25.00 Δ=88°40'00" Tan=24.42	③ L=26.41 R=650.00 Δ=2°19'41" Tan=13.21
④ L=26.41 R=650.00 Δ=2°19'41" Tan=13.21	⑤ L=57.97 R=650.00 Δ=5°06'35" Tan=29.00	⑥ L=57.97 R=650.00 Δ=5°06'35" Tan=29.00

AMAFCA DATE

dmg MARK GOODWIN & ASSOCIATES, P.A.
CONSULTING ENGINEERS
P.O. BOX 90606
ALBUQUERQUE, NEW MEXICO 87199
(505) 828-2200, FAX (505) 797-9539

AS BUILT INFORMATION
CONTRACTOR: AVIT, INC.
WORK STAKED BY: Carstenson Surveys Inc. DATE: 7/04
SUBMITTED BY: Carstenson Surveys Inc. DATE: 7/04
ACCEPTANCE BY: M.G.A. DATE: 7/10
FIELD VERIFICATION BY: Carstenson Surveys Inc. DATE: 7/04
DRAWINGS CORRECTED BY: M.G.A. DATE: 7/10
MICRO-FILM INFORMATION
RECORDED BY DATE
NO

BENCH MARKS
STATION "3-M22" IS LOCATED 8.7 MI. SE OF DOWNTOWN ALBUQUERQUE ON THE EAST SIDE OF THE MUNICIPAL LIMITS LINE IN THE FOUR HILLS SUBDIVISION AREA. STATION IS 600 FT. EAST OF MUNICIPAL LIMITS LINE, 77.8' SE OF POWER POLE #EET & 186.0' NW OF POWER POLE #60. STATION IS A STANDARD ACS BRASS DISK SET IN A CONCRETE MONUMENT IN THE GROUND. STATION IS STAMPED "3-M22, 1975ACS". X= 424,017.61, Y= 1,475,700.07, (NAD 1927), Z= 5594.518 (SLD 1929).

SURVEY INFORMATION

NO	BY	DATE	FIELD NOTES

ENGINEER'S SEAL
JAMES D. HUGHES NEW MEXICO 11874 REGISTERED PROFESSIONAL ENGINEER
4-17-07

NO.	DATE	REMARKS	BY
		REVISIONS	
		DESIGN	

		DATE
DESIGNED BY	JDH	12/04
DRAWN BY	DER	12/04
CHECKED BY	DMG	12/04

CITY OF ALBUQUERQUE
PUBLIC WORKS DEPARTMENT

TITLE JUAN TABO BOULEVARD S.E. - PHASE II PAVING IMPROVEMENTS

DESIGN REVIEW COMMITTEE: APPROVED JUL 27 2005 DESIGN REVIEW COMMITTE
CITY ENGINEER APPROVAL: APPROVED JUL 28 2005 CITY ENGINEER
LAST DESIGN UPDATE: MO./DAY/YR. MO./DAY/YR.

CITY PROJECT NO	ZONE MAP NO	SHEET	OF	
756181	M-21/N-21	4	46	C-4

F:\A02JOBS\A2079 4 HILLS\Bridge Plans\Phase II\A2079-Bridge-pp1.dwg, 8/16/2005 3:32:30 PM, PLOTTED BY DER

NOTES

1. ALL STATIONING IS BASED ON CENTERLINE OF RIGHT-OF-WAY

KEYED NOTES

1. NEW STANDARD CURB & GUTTER
2. NEW 4' SIDEWALK
3. NEW 4' VALLEY GUTTER
4. NEW 6' VALLEY GUTTER
5. NEW 10' VALLEY GUTTER

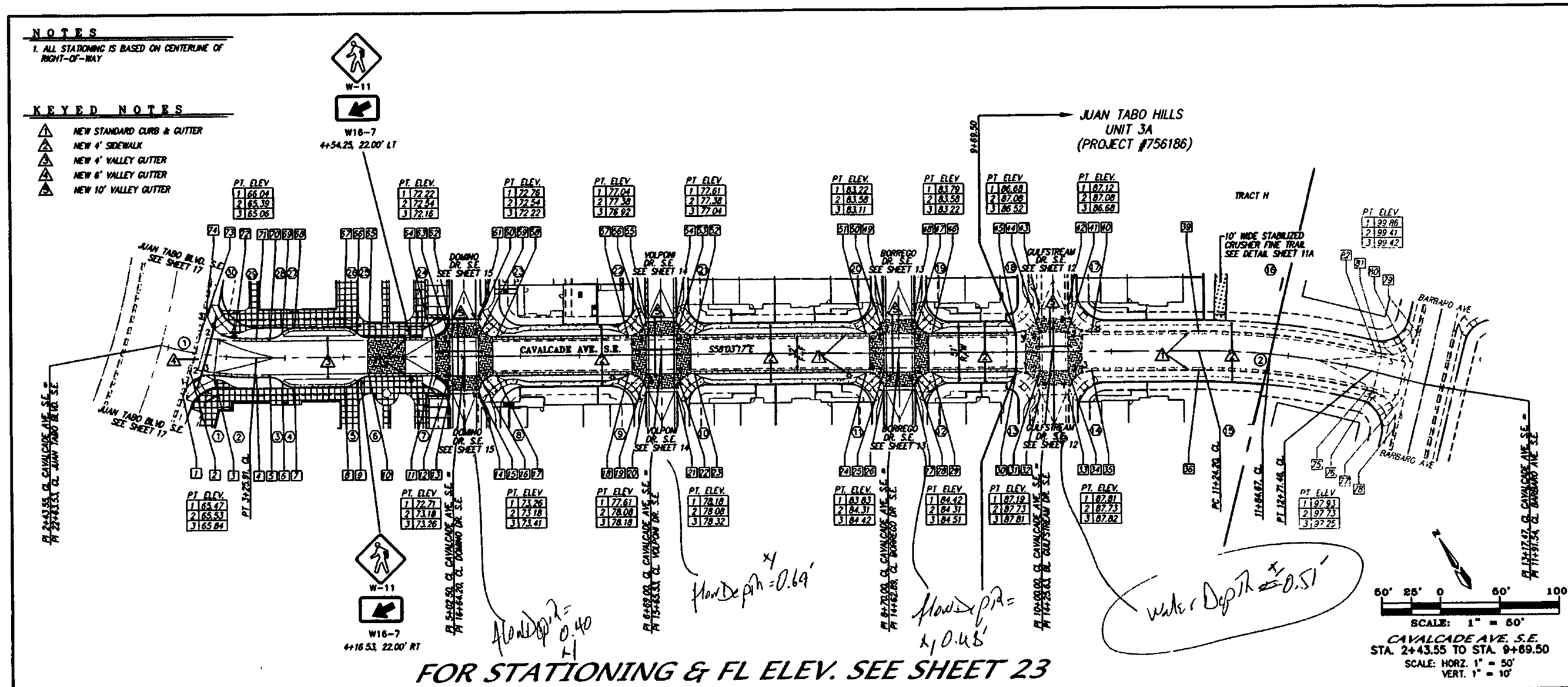

FOR STATIONING & FL ELEV. SEE SHEET 23

CAVALCADE AVE. S.E.
STA. 2+43.55 TO STA. 9+69.50
SCALE: HORZ. 1" = 50'
VERT. 1" = 10'

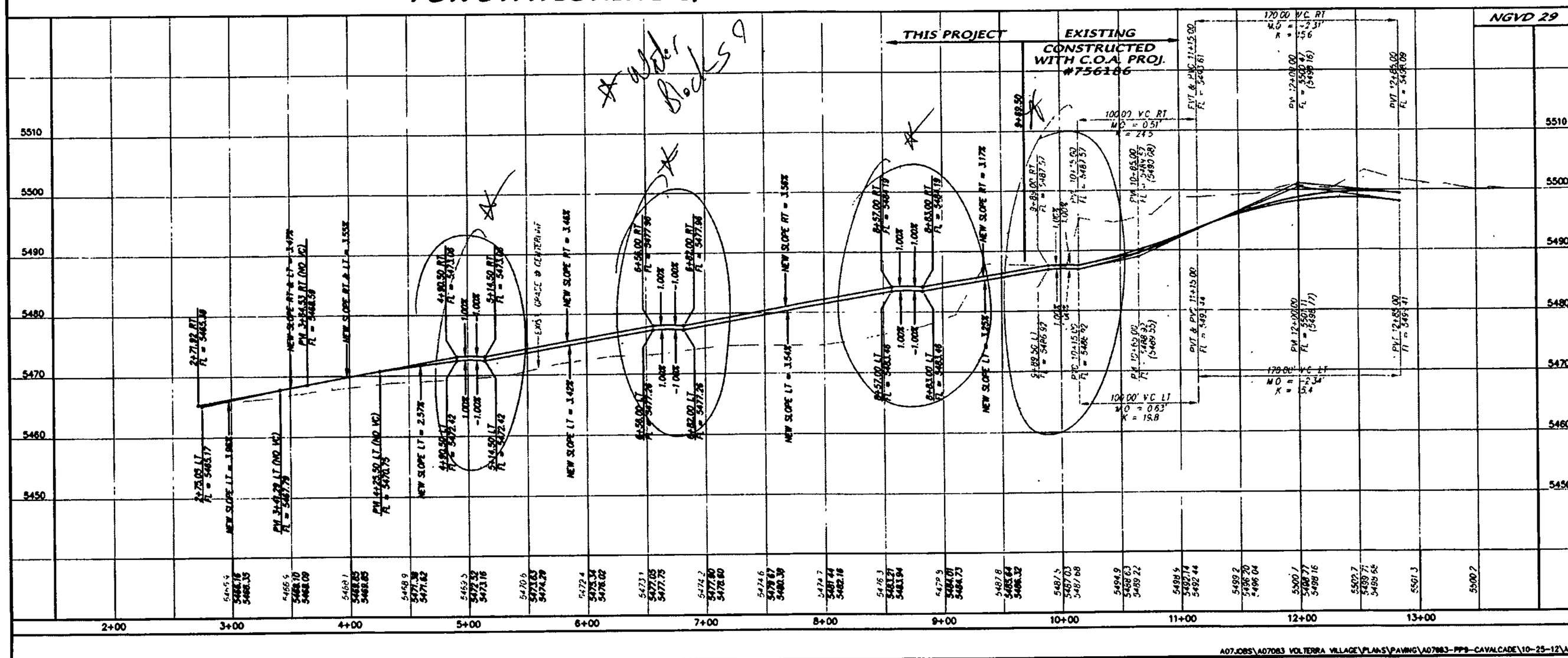

CURVE DATA - DESCRIBES FLOWLINE

① Δ=77°53'52" L=33.99 R=25.00 Tan=20.21	② Δ=6°36'43" L=36.47 R=316.00 Tan=18.25	③ Δ=44°13'12" L=11.58 R=15.00 Tan=6.09
④ Δ=44°13'12" L=11.58 R=15.00 Tan=6.09	⑤ Δ=44°13'12" L=11.58 R=15.00 Tan=6.09	⑥ Δ=44°13'12" L=11.58 R=15.00 Tan=6.09
⑦ Δ=90°00'00" L=23.56 R=15.00 Tan=15.00	⑧ Δ=134°13'12" L=35.14 R=15.00 Tan=35.53	⑨ Δ=90°00'00" L=23.56 R=15.00 Tan=15.00
⑩ Δ=90°00'00" L=23.56 R=15.00 Tan=15.00	⑪ Δ=90°00'00" L=23.56 R=15.00 Tan=15.00	⑫ Δ=90°00'00" L=23.56 R=15.00 Tan=15.00
⑬ Δ=90°00'00" L=31.42 R=20.00 Tan=20.00	⑭ Δ=90°00'00" L=31.42 R=20.00 Tan=20.00	⑮ Δ=532°43" L=56.52 R=584.00 Tan=28.28
⑯ Δ=5°59'27" L=64.41 R=616.00 Tan=32.23	⑰ Δ=90°00'00" L=31.42 R=20.00 Tan=20.00	⑱ Δ=90°00'00" L=31.42 R=20.00 Tan=20.00
⑲ Δ=90°00'00" L=23.56 R=15.00 Tan=15.00	⑳ Δ=90°00'00" L=23.56 R=15.00 Tan=15.00	㉑ Δ=90°00'00" L=23.56 R=15.00 Tan=15.00
㉒ Δ=90°00'00" L=23.56 R=15.00 Tan=15.00	㉓ Δ=134°13'12" L=35.14 R=15.00 Tan=35.53	㉔ Δ=90°00'00" L=23.56 R=15.00 Tan=15.00
㉕ Δ=44°13'12" L=11.58 R=15.00 Tan=6.09	㉖ Δ=44°13'12" L=11.58 R=15.00 Tan=6.09	㉗ Δ=44°13'12" L=11.58 R=15.00 Tan=6.09
㉘ Δ=44°13'12" L=11.58 R=15.00 Tan=6.09	㉙ Δ=3°49'09" L=18.93 R=284.00 Tan=9.47	㉚ Δ=98°07'26" L=42.81 R=25.00 Tan=28.82

CURVE DATA - DESCRIBES CENTERLINE

① Δ=15°43'52" L=82.37 R=300.00 Tan=41.44	② Δ=14°03'45" L=147.28 R=600.00 Tan=74.00

CERTIFICATE OF SUBSTANTIAL COMPLIANCE

AS BUILT INFORMATION

CONTRACTOR
WORK STAKED BY
INSPECTOR'S ACCEPTANCE BY
FIELD TWEAKS BY
VERIFICATION BY
CORRECTED BY
DATE

MICRO-FILM INFORMATION
RECORDED BY
DATE
NO

BENCH MARKS
STATION "9-A22" IS LOCATED 8.7 MI. SE OF DOWNTOWN ALBUQUERQUE ON THE EAST SIDE OF THE MUNICIPAL LIMITS LINE IN THE FOUR HILLS SUBDIVISION AREA. STATION IS 800 FT. EAST OF MUNICIPAL LIMITS LINE. 71.5' SE OF POWER POLE P037 & 108.5' NW OF POWER POLE P05. STATION IS A STANDARD ACS BRASS DISK SET IN A CONCRETE MONUMENT IN THE GROUND. STATION IS STAMPED "9-A22, 1975ACS". X= 426,017.61, Y= 1,473,700.07, (NAD 1927), Z= 5504.518 (SEA 1929).

SURVEY INFORMATION

NO	BY	DATE	FIELD NOTES

ENGINEER'S SEAL

NO	DATE	REMARKS	BY
		REVISIONS	

		DATE
DESIGNED BY	GJK	04/09
DRAWN BY	ACH	04/09
CHECKED BY	DMG	04/09

dmg
MARK GOODWIN & ASSOCIATES, P.A.
CONSULTING ENGINEERS
P.O. BOX 90606
ALBUQUERQUE, NEW MEXICO 87199
OFFICE (505) 828-2200, FAX (505) 797-9539

CITY OF ALBUQUERQUE
PUBLIC WORKS DEPARTMENT

TITLE.
VOLTERRA VILLAGE
CAVALCADE AVE. S.E.
PAVING IMPROVEMENTS

DESIGN REVIEW COMMITTEE | CITY ENGINEER APPROVAL | LAST DESIGN UPDATE | MO./DAY/YR | MO./DAY/YR

CITY PROJECT NO 756188 | ZONE MAP NO M-21-Z/M-22-Z | SHEET 20 OF 37

A07JOBS\A07083 VOLTERRA VILLAGE\PLANS\PAVING\A07083-PP9-CAVALCADE\10-25-12\ACH

Copyright © 2012 D. MARK GOODWIN & ASSOCIATES, P.A. All Rights Reserved.

P:\A07JOBS\A07083 VOLTERRA VILLAGE\PLANS\PAVING\A07083-PP9-CAVALCADE.dwg, 10/26/2012 4:35:19 PM, HP 7100 Series (Copy 1), DMGS

NOTES

1. ALL STATIONING IS BASED ON CENTERLINE OF RIGHT-OF-WAY.
2. TRANSITION FROM 6" STANDARD CURB & GUTTER IN THE PRIVATE DRIVES TO EITHER MOUNTABLE CURB & GUTTER OR STANDARD CURB & GUTTER IN THE ROADWAY WILL OCCUR THROUGH THE RADIUS OF THE RETURN.
3. TRANSITION FROM MEDIAN CURB & GUTTER IN THE PARKING SPACE AREAS TO EITHER MOUNTABLE CURB & GUTTER OR STANDARD CURB & GUTTER IN THE ROADWAY WILL OCCUR THROUGH THE RADIUS OF THE RETURN.

KEYED NOTES

1. NEW MOUNTABLE CURB & GUTTER
2. NEW STANDARD CURB & GUTTER
3. NEW 4' SIDEWALK (DEFERRED)
4. NEW 5' SIDEWALK (DEFERRED)
5. NEW 4' VALLEY GUTTER
6. NEW 6' VALLEY GUTTER
7. NEW 8' UNIDIRECTIONAL ACCESS RAMP PER COA STD DWG 2425 AND DETAIL SHEET 11A
8. FUTURE DRIVEWAY CONCRETE TO BE COMPLETED WITH EACH BLDG. PERMIT
9. NEW MEDIAN CURB & GUTTER
10. NEW 6" STANDARD CURB & GUTTER

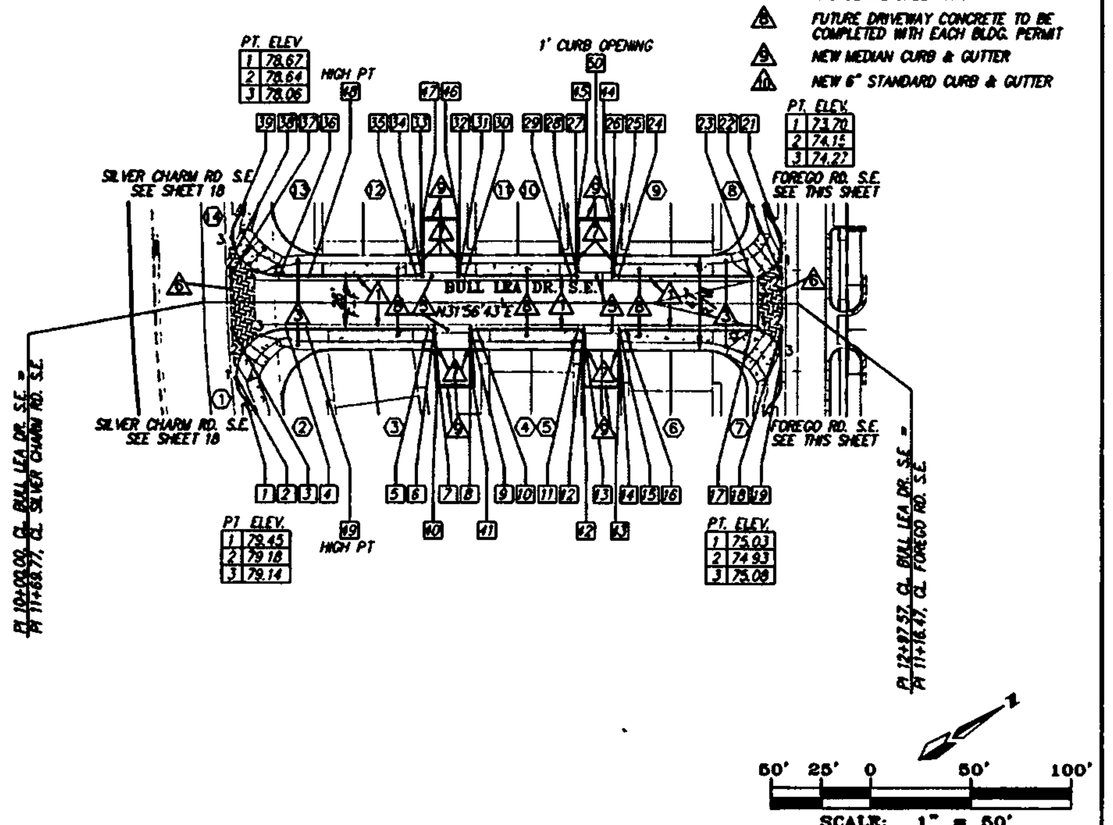

FOR STATIONING & FL ELEV. SEE SHEET 22

BULL LEA DR. S.E.
STA. 10+00.00 TO STA. 12+97.56
SCALE. HORZ. 1" = 50'
VERT. 1" = 10'

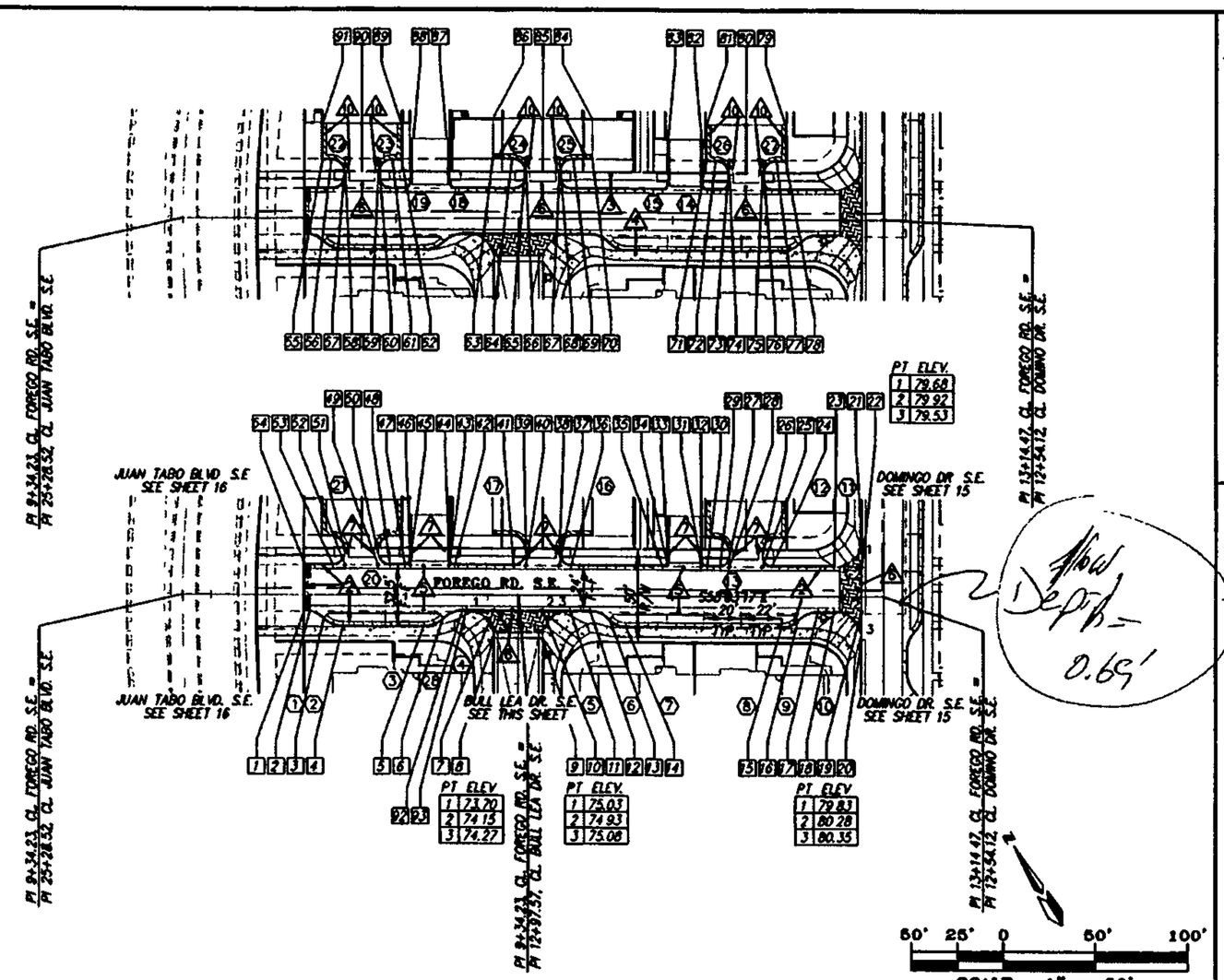

Field Depth = 0.69'

FOR STATIONING & FL ELEV. SEE SHEET 22

FOREGO RD. S.E.
STA. 9+34.23 TO STA. 13+14.47
SCALE: HORZ. 1" = 50'
VERT. 1" = 10'

BULL LEA DR. S.E. CURVE DATA ~ DESCRIBES FLOWLINE

① Δ=54°04'01" L=14.15 R=15.00 Tan=7.65	② Δ=86°11'29" L=37.81 R=25.00 Tan=23.39	③ Δ=86°30'26" L=4.52 R=3.00 Tan=2.81
④ Δ=93°48'39" L=4.91 R=3.00 Tan=3.21	⑤ Δ=90°00'01" L=4.71 R=3.00 Tan=3.00	⑥ Δ=90°00'00" L=4.71 R=3.00 Tan=3.00
⑦ Δ=90°00'00" L=23.56 R=15.00 Tan=15.00	⑧ Δ=90°00'00" L=23.56 R=15.00 Tan=15.00	⑨ Δ=90°00'00" L=4.71 R=3.00 Tan=3.00
⑩ Δ=90°00'00" L=4.71 R=3.00 Tan=3.00	⑪ Δ=90°00'00" L=4.71 R=3.00 Tan=3.00	⑫ Δ=90°00'00" L=4.71 R=3.00 Tan=3.00
⑬ Δ=59°40'43" L=26.04 R=25.00 Tan=14.34	⑭ Δ=69°26'22" L=18.19 R=15.00 Tan=10.40	

FOREGA RD. S.E. CURVE DATA ~ DESCRIBES FLOWLINE

① Δ=33°18'22" L=8.72 R=15.00 Tan=4.49	② Δ=44°33'12" L=11.58 R=15.00 Tan=6.09	③ Δ=44°33'12" L=11.58 R=15.00 Tan=6.09
④ Δ=90°00'00" L=23.56 R=15.00 Tan=15.00	⑤ Δ=90°00'00" L=23.56 R=15.00 Tan=15.00	⑥ Δ=46°44'59" L=12.24 R=15.00 Tan=6.48
⑦ Δ=46°44'59" L=8.79 R=12.00 Tan=5.19	⑧ Δ=46°44'59" L=8.79 R=12.00 Tan=5.19	⑨ Δ=46°44'59" L=12.24 R=15.00 Tan=6.48
⑩ Δ=90°00'00" L=23.56 R=15.00 Tan=15.00	⑪ Δ=90°00'00" L=23.56 R=15.00 Tan=15.00	⑫ Δ=90°00'00" L=7.85 R=5.00 Tan=5.00
⑬ Δ=90°00'00" L=7.85 R=5.00 Tan=5.00	⑭ Δ=90°00'00" L=4.71 R=3.00 Tan=3.00	⑮ Δ=90°00'00" L=4.71 R=3.00 Tan=3.00
⑯ Δ=90°00'00" L=10.21 R=6.50 Tan=6.50	⑰ Δ=90°00'00" L=10.21 R=6.50 Tan=6.50	⑱ Δ=90°00'00" L=4.71 R=3.00 Tan=3.00
⑲ Δ=90°00'00" L=4.71 R=3.00 Tan=3.00	⑳ Δ=90°00'00" L=10.21 R=6.50 Tan=6.50	㉑ Δ=90°00'00" L=10.21 R=6.50 Tan=6.50
㉒ Δ=90°00'00" L=11.78 R=7.50 Tan=7.50	㉓ Δ=90°00'00" L=11.78 R=7.50 Tan=7.50	㉔ Δ=90°00'00" L=11.78 R=7.50 Tan=7.50
㉕ Δ=90°00'00" L=11.78 R=7.50 Tan=7.50	㉖ Δ=90°00'00" L=11.78 R=7.50 Tan=7.50	㉗ Δ=90°00'00" L=11.78 R=7.50 Tan=7.50
㉘ Δ=44°33'12" L=11.58 R=15.00 Tan=6.09		

CERTIFICATE OF SUBSTANTIAL COMPLIANCE

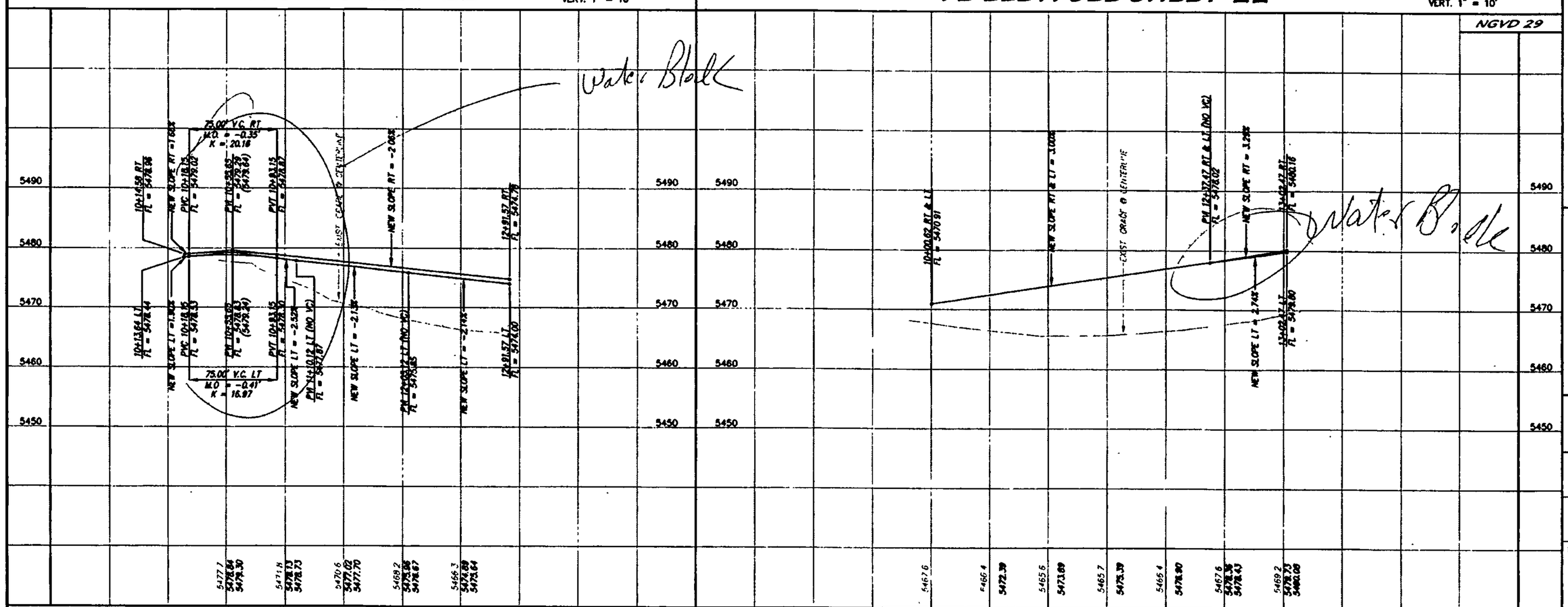

Copyright © 2012 D MARK GOODWIN & ASSOCIATES, P.A. All Rights Reserved

A07J085\A07083 VOLTERRA VILLAGE\PLANS\PAVING\A07083-PP7-BULL LEA\10-25-12\ACH

AS BUILT INFORMATION

CONTRACTOR		DATE
STAKED BY		
INSPECTOR'S INITIAL		DATE
FIELD VERIFIED BY		DATE
DRAWINGS CORRECTED BY		DATE

MICRO-FILM INFORMATION

RECORDED BY	DATE
NO	

BENCH MARKS

STATION "3-M22" IS LOCATED 8.7 MI. SE OF DOWNTOWN ALBUQUERQUE ON THE EAST SIDE OF THE MUNICIPAL LIMITS LINE IN THE FOUR HILLS SUBDIVISION AREA. STATION IS 600 FT. EAST OF MUNICIPAL LIMITS LINE. 77.8' SE OF POWER POLE #2617 & 106.1' NW OF POWER POLE #61. STATION IS A STANDARD ACS BRASS DISK SET IN A CONCRETE MONUMENT IN THE GROUND. STATION IS STAMPED "3-M22, 1973ACS". X= 426,017.87, Y= 1,475,700.07, (NAD 1927), Z= 5594.519 (SLD 1929).

SURVEY INFORMATION

FIELD NOTES

NO.	BY	DATE

ENGINEER'S SEAL

NO.	DATE	REMARKS	BY
		REVISIONS	

		DATE
DESIGNED BY	GJK	04/09
DRAWN BY	ACH	04/09
CHECKED BY	DMG	04/09

MARK GOODWIN & ASSOCIATES, P.A.
CONSULTING ENGINEERS
P O BOX 90606
ALBUQUERQUE, NEW MEXICO 87199
OFFICE (505) 828-2200, FAX (505) 797-9539

CITY OF ALBUQUERQUE
PUBLIC WORKS DEPARTMENT

TITLE
VOLTERRA VILLAGE
BULL LEA DR. S.E. & FOREGO RD. S.E.
PAVING IMPROVEMENTS

DESIGN REVIEW COMMITTEE	CITY ENGINEER APPROVAL	LAST DESIGN UPDATE	MO/DAY/YR	MO/DAY/YR

CITY PROJECT NO	ZONE MAP NO	SHEET	OF
756188	M-21-Z/M-22-Z	16	37

NOTES

1. ALL STATIONING IS BASED ON CENTERLINE OF RIGHT-OF-WAY.

KEYED NOTES

1. NEW STANDARD CURB & GUTTER
2. NEW 4' SIDEWALK (DEFERRED)
3. NEW 5' SIDEWALK (DEFERRED)
4. NEW 4' VALLEY GUTTER
5. NEW 6' VALLEY GUTTER
6. NEW 6' SIDEWALK (DEFERRED)
7. NEW 14' VALLEY GUTTER
8. NEW 4' SIDEWALK (THIS PROJECT)
9. NEW 6' MID-BLOCK UNIDIRECTIONAL ACCESS RAMP PER COA STD DWG 2425 AND DETAIL SHEET 11A

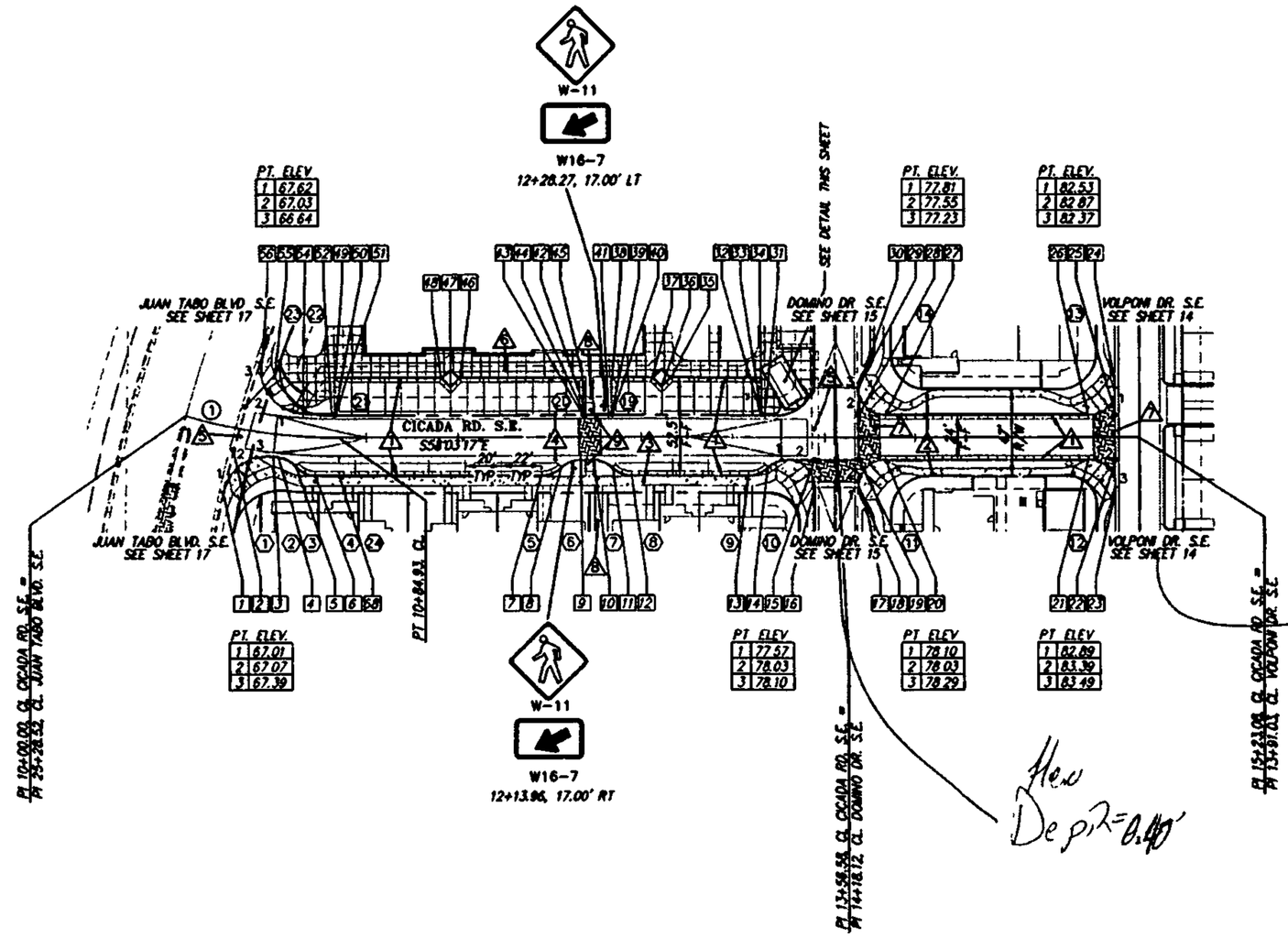

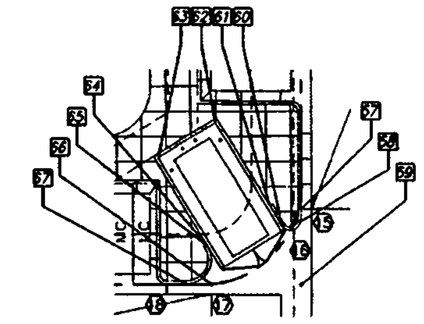

CURVE DATA – DESCRIBES FLOWLINE

① Δ=83°51'34" L=36.58 R=25.00 Tan=22.45	② Δ=0°30'46" L=2.81 R=314.50 Tan=1.41	③ Δ=42°22'12" L=11.09 R=15.00 Tan=5.81
④ Δ=46°08'01" L=12.08 R=15.00 Tan=6.39	⑤ Δ=44°13'12" L=11.58 R=15.00 Tan=6.09	⑥ Δ=44°13'12" L=11.58 R=15.00 Tan=6.09
⑦ Δ=44°13'12" L=11.58 R=15.00 Tan=6.09	⑧ Δ=44°13'12" L=11.58 R=15.00 Tan=6.09	⑨ Δ=44°13'12" L=11.58 R=15.00 Tan=6.09
⑩ Δ=134°13'12" L=35.14 R=15.00 Tan=35.53	⑪ Δ=134°13'12" L=35.14 R=15.00 Tan=35.53	⑫ Δ=90°00'00" L=23.56 R=15.00 Tan=15.00
⑬ Δ=90°00'00" L=23.56 R=15.00 Tan=15.00	⑭ Δ=134°13'12" L=35.14 R=15.00 Tan=35.53	⑮ Δ=9°43'23" L=2.55 R=15.00 Tan=1.28
⑯ Δ=138°53'50" L=4.85 R=2.00 Tan=5.33	⑰ Δ=121°22'47" L=10.59 R=5.00 Tan=8.91	⑱ Δ=89°59'58" L=3.14 R=2.00 Tan=2.00
⑲ Δ=90°00'00" L=3.14 R=2.00 Tan=2.00	⑳ Δ=90°00'00" L=3.14 R=2.00 Tan=2.00	㉑ Δ=90°45'53" L=3.17 R=2.00 Tan=2.03
㉒ Δ=313°42" L=15.52 R=290.50 Tan=7.76	㉓ Δ=106°10'10" L=46.33 R=25.00 Tan=33.28	㉔ Δ=27°51' L=13.05 R=323.00 Tan=6.52

CURVE DATA – DESCRIBES CENTERLINE

① Δ=16°05'14" L=84.93 R=302.50 Tan=42.75

SCALE: 1" = 50'

CICADA RD. S.E.
STA. 10+00.00 TO STA. 15+23.08
SCALE: HORZ. 1" = 50'
VERT 1" = 10'

FOR STATIONING & FL ELEV. SEE SHEET 23

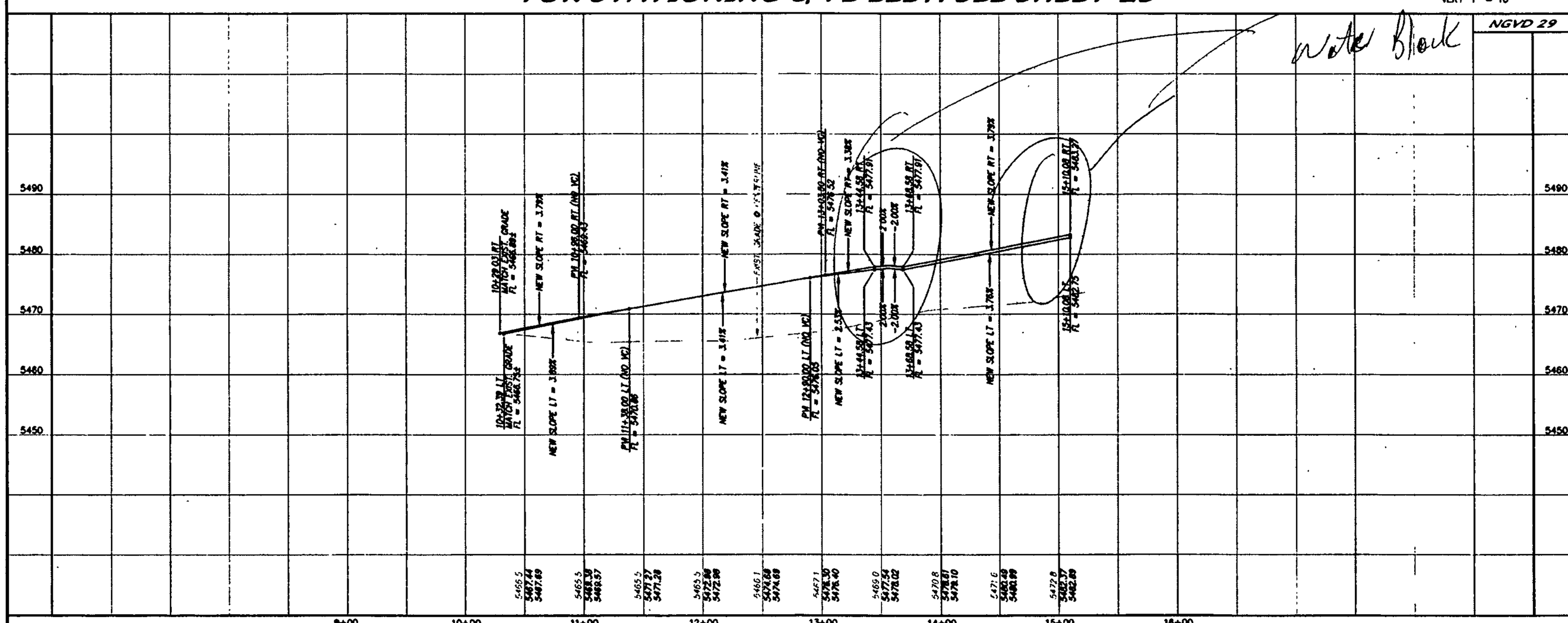

Copyright © 2012 D. MARK GOODWIN & ASSOCIATES, P.A. All Rights Reserved.

A07JOBS\A07083 VOLTERRA VILLAGE\PLANS\PAVING\A07083-PP8-CICADA\10-26-12\ACH

CERTIFICATE OF SUBSTANTIAL COMPLIANCE

dmg MARK GOODWIN & ASSOCIATES, P.A
CONSULTING ENGINEERS
P.O. BOX 90606
ALBUQUERQUE, NEW MEXICO 87199
OFFICE (505) 828-2200, FAX (505) 797-8539

AS BUILT INFORMATION

CONTRACTOR	DATE
WORK SUPERVISOR	
INSPECTORS ACCEPTANCE BY	DATE
FIELD VERIFICATION BY	DATE
DRAWINGS CORRECTED BY	DATE

MICRO-FILM INFORMATION

RECORDED BY	DATE
NO	

BENCH MARKS

STATION "5-A22" IS LOCATED 6.7 MI. SE OF DOWNTOWN ALBUQUERQUE ON THE EAST SIDE OF THE MUNICIPAL LIMITS LINE IN THE TOUR HILLS SUBDIVISION AREA. STATION IS 600 FT. EAST OF MUNICIPAL LIMITS LINE, 77.5' SE OF POWER POLE #257 & 106.0' NW OF POWER POLE #80. STATION IS A STANDARD ACS BRASS DISK SET IN A CONCRETE MONUMENT IN THE GROUND. STATION IS STAMPED "5-A22, 1975ACS". X= 474,017.61, Y= 1,475,700.07, (NAD 1927), Z= 5594.518 (SLD 1929).

SURVEY INFORMATION

NO.	BY	DATE	FIELD NOTES

ENGINEER'S SEAL

NO.	DATE	REMARKS	BY

REVISIONS

		DATE
DESIGNED BY	GJK	04/09
DRAWN BY	ACH	04/09
CHECKED BY	DMG	04/09

CITY OF ALBUQUERQUE
PUBLIC WORKS DEPARTMENT

TITLE. VOLTERRA VILLAGE
CICADA RD. S.E.
PAVING IMPROVEMENTS

DESIGN REVIEW COMMITTEE	CITY ENGINEER APPROVAL	LAST DESIGN UPDATE	MO./DAY/YR	MO./DAY/YR

CITY PROJECT NO	ZONE MAP NO.	SHEET	OF
756188	M-21-Z/M-22-Z	19	37

June 29, 2009

Peggy B Graham, P.E.
Regional Engineer
Advanced Drainage Systems, Inc.
5934 E. Hampton Street
Tuscon, AZ, 85712

RE: HDPE pipe requirements for demonstration project

Dear Ms. Graham:

In the past, the City of Albuquerque has utilized HDPE pipe for storm drainage applications. To date this pipe has not produced desirable results with respect to storm drainage applications. In one particular case, the section of HDPE pipe had to be completely removed and replaced with RCP pipe. It is unclear at the present on why this type of pipe does not function well for storm water, if it is the pipe or construction methods used for installing this pipe.

In the interest of increasing competitiveness, the City of Albuquerque will allow one more test section for HDPE pipe on a privately funded project if the following conditions are met.

1. For main line storm drains pipe diameter shall be 24" through 48" and for lateral storm drains pipe diameter shall be 18" in diameter.
2. The pipe may be located in the right-of-way under pavement in a street with a classification of collector or less..
3. The pipe manufacturer must supply the City of Albuquerque with a letter of credit for the pipe that is effective for an additional four years after the contractor's 1-year warranty period. Any damage to the pipe during the first year will be covered by the contractor's warranty. Any damage to the pipe during year two through five will be covered by the pipe manufacturer with the following exclusions: boring through th pipe by another party, damage inflicted by another party during excavation for repair, replacement or installation of another utility, intentional arson.

Steven,

notes to be on plan

4. An employee of the pipe manufacturer or qualified representative will observe and approve the pipe installation.
5. The installation procedures will be in accordance with ASTM D2321, and Manufacturer requirements.
6. The pipe manufacturer will videotape the pipe installation and provide a copy to the City.
7. The City of Albuquerque will oversee the contractor perform infiltration/exfiltration or air testing no less than 30 days after installation. The infiltration/exfiltration testing will be per ASTM C969 and the air test pr ASTM C924.

8. The contractor during the one year warranty will repair or replace any section of pipe, at no charge to the City of Albuquerque, which has exceeded a criterion of 7.5% deflection and/or has significant soil infiltration at the joints. Deflection measurements are based on the nominal inside diameter minus manufacturing tolerances minus 7.5% and shall be measured no less than 30 days after installation. All dimensions are per AASHTO M294.

All construction methods and design plans will need to meet the City of Albuquerque standards and be processed through the Design Review Committee.

If the pipe does not meet the above identified requirements at the end of this 5 year performance period, the pipe manufacturer shall be required to have this section of pipe replaced with reinforced concrete pipe (or other City approved material) of equal size. The letter of credit shall enable the City to call on this guarantee to replace the pipe if pipe manufacturer does not comply with these requirements.

If you have any questions please feel free to call me at 505-924-3999.

Richard Dourte, PE
City Engineer
Planning Department

Cc: Michael Riordan, PE, Acting Director of DMD
John Kolessar, PE, Acting Deputy Director of DMD
Wilfred Gallegos, PE, Street Maintenance, DMD
Roland Penttila, PE, Hydrology Div. Manager, DMD
Bradley Bingham, PE, Hydrology Manager
Jane Rael, PE, Design Review Manager

Cherne, Curtis

From: Gregory Krenik [Greg@goodwinengineers.com]
Sent: Thursday, July 23, 2009 10:21 AM
To: Cherne, Curtis
Subject: ADS HDPE Pipe
Attachments: Richard Dourtes letter 6-30-09.doc; ADS Structures 08-2008.pdf; ADS Durability 05-2008.pdf; ADS Installation 08-2008.pdf; A2.01-Min_Max_Burial_Depth_CorrHDPE_Pipe 09-2008.pdf

Curtis,
Here is the HDPE pipe info I have from Advanced Drainage Systems. We will be specifying ADS N12 WT HDPE pipe on the plans. The min cover is 12" for our applications as you will see in the data and Peggy's letter
Greg.

From: Peggy Graham [mailto:Peggy.Graham@ads-pipe.com]
Sent: Tuesday, June 30, 2009 4:17 PM
To: Gregory Krenik
Cc: RDourte@cabq.gov
Subject: ADS HDPE Pipe

Greg

Thank you for talking with me yesterday. As we discussed Richard Dourte has approved our pipe for a project test site. I am hoping to find a project that is in the right-of-way, under pavement for a street with a classification of collector or less. I have attached the letter from Richard Dourte discussing some of the details. In addition I have attached some information regarding our pipe but wanted to provide a brief synopsis below:

ADS N12 HDPE (High Density Polyethylene Pipe) Type S, virgin resin and manufactured per AASHTO M252 (< 10" diameter) and AASHTO M294 (12" to 60" diameter).

Structural loading:

- N12 is designed for a HS 25 live load
- Maximum cover varies per diameter, backfill and compaction, for example for a 30" diameter pipe backfilled with a Class I the fill height =
- Minimum cover is one foot for pipe diameters 4" to 48" (from top of pipe to flexible pavement or top of pipe to rigid pavement)
- Minimum cover is two feet for pipe diameters 54" and 60" (from top of pipe to flexible pavement or top of pipe to rigid pavement)

Manning's n= 0.012 (in the lab the pipe test to 0.009)

Durability:

- pH range is from 1.5 to 14
- excellent abrasion resistance for higher velocities
- polyethylene is practically inert, similar to PVC

Attachments:

1. Richard Dourte's letter

2. The following drainage handbook's sections:
   - Structural
   - Durability
   - Installation
3. Technical Note 2.02 "Fill Heights"

I look forward to hearing from in the event that you will have a suitable project that fits the City's parameters and the clients desire for a competitive product.

Regards,

Peggy B Graham, P.E.
Mountain States Regional Engineer
Advanced Drainage Systems
720-982-6303 cell
peggy.graham@ads-pipe.com

N-12 WT IB (GASKETED WATERTIGHT COUPLERS)

Watertight joints are designed to maintain a specified level of watertightness to keep effluent in the system and keep soils out. The ADS 4- through 60-inch (100mm - 1500mm) N-12 WT IB joint meets the watertight joint performance requirements of AAHSTO M252, AASHTO M294, ASTM F2306. This joint showed no leakage when pressurized to 10.8 psi (74.5 kPa) under the laboratory conditions established in ASTM D3212.

This level of watertightness is recommended for systems that will be pressure tested, or that require a very tight joint for other site and/or environmental reasons.

Guidelines for deciding what joint performance is appropriate in a particular application are provided in Table 5-5.

Table 5-5
Guidelines for Joint Performance Selection

Joint Performance Options			
	Soil Tight		Water Tight
Project Conditions	**N-12 Plain End (4"-30")**	**N-12 ST IB Gasketed (4"-60")**	**N-12 WT IB (4"-60")**
SOIL FACTORS			
Potential for small or negligible soil migration (e g., gravel, medium to coarse sands, cohesive soil).	√	√	√
Potential for moderate soil migration (e.g., fine sands, silts).	N/R	√	√
Potential for severe soil migration (e.g , very fine sands, non-cohesive fines)	N/R	N/R	√
EFFLUENT CONDITIONS			
Effluent is permitted to infiltrate into ground, poses little or no environmental concern.	√	√	√
Effluent has potential to cause groundwater or other contamination.	N/R	N/R	√
PRESSURE CONDITIONS			
Installation will operate under non-pressure conditions.	√	√	√
Installation will operate under non-pressure conditions; minimized leakage desired.	N/R	√	√
Installations with low temporary pressures and ASTM D3212 joint quality required Installed system to be hydrostatic pressure tested.	N/R	N/R	√

√ The most restrictive of the project conditions will ultimately determine minimum joint quality Ultimately, the design engineer must determine the acceptable joint quality for the project

N/R Not recommended by manufacturer. Final approval contingent on design engineer

© ADS, Inc., August 2008

TECHNICAL NOTE

Minimum and Maximum Burial Depth for Corrugated HDPE Pipe

TN 2.01
September 2008

Introduction

The information in this document is designed to provide answers to general cover height questions; the data provided is not intended to be used for project design. The design procedure described in the *Structures* section (Section 2) of the Drainage Handbook provides detailed information for analyzing most common installation conditions. This procedure should be utilized for project specific designs.

The two common cover height concerns are minimum cover in areas exposed to vehicular traffic and maximum cover heights. Either may be considered "worst case" scenario from a loading perspective, depending on the project conditions.

Minimum Cover in Traffic Applications

Pipe diameters from 4- through 48-inch (100-1200 mm) installed in traffic areas (AASHTO H-25 or HS-25 loads) must have at least one foot (0.3m) of cover over the pipe crown, while 54- and 60-inch (1350 and 1500 mm) pipes must have at least 24 inches (0.6m) of cover The backfill envelope must be constructed in accordance with the *Installation* section (Section 5) of the Drainage Handbook and the requirements of ASTM D2321. The backfill envelope must be of the type and compaction listed in Table 2-3 of the Drainage Handbook. In Table 1 below, this condition is represented by a Class III material compacted to 90% standard Proctor density, although other material can provide similar strength at slightly lower levels of compaction. Structural backfill material should extend six inches (0.15m) over the crown of the pipe; the remaining cover should be appropriate for the installation and as specified by the design engineer. If settlement or rutting is a concern, it may be appropriate to extend the structural backfill to grade. Where pavement is involved, sub-base material can be considered in the minimum burial depth. While rigid pavements can be included in the minimum cover, the thickness of flexible pavements should not be included in the minimum cover.

Additional information that may affect the cover requirements is included in the *Installation* section (Section 5) of the Drainage Handbook. Some examples of what may need to be considered are temporary heavy equipment, construction loading , paving equipment and similar loads that are less than the design load, the potential of pipe flotation, and the type of surface treatment which will be installed over the pipe zone.

Table 1
Minimum Cover Requirements for ADS N-12®, N-12® ST, and N-12® WT with AASHTO H-25 or HS-25 Load

Inside Diameter, ID, in.(mm)	Minimum Cover ft. (m)
3 (75)	1 (0.3)
4 (100)	1 (0 3)
6 (150)	1 (0 3)
8 (200)	1 (0 3)
10 (250)	1 (0 3)
12 (300)	1 (0 3)
15 (375)	1 (0.3)
18 (450)	1 (0 3)

Inside Diameter, ID, in.(mm)	Minimum Cover ft. (m)
24 (600)	1 (0.3)
30 (750)	1 (0.3)
36 (900)	1 (0.3)
42 (1050)	1 (0.3)
48 (1200)	1 (0 3)
54 (1350)	2 (0.6)
60 (1500)	2 (0 6)

Note: Minimum covers presented here were calculated assuming Class III backfill material compacted to 90% standard Proctor density around the pipe and a minimum of 6-inches (0 15m) structural backfill over the pipe crown, as recommended in Section 5 of the Drainage Handbook, with an additional layer of compacted traffic lane sub-base for a total cover as required. In shallow traffic installations, especially where pavement is involved, a good quality compacted material to grade is required to prevent surface settlement and rutting

© ADS 2008

Maximum Cover

Wall thrust generally governs the maximum cover a pipe can withstand and conservative maximum cover heights will result when using the information presented in the *Structures* section (Section 2) of the Drainage Handbook.

The maximum burial depth is highly influenced by the type of backfill and level of compaction around the pipe. General maximum cover limits for ADS N-12, N-12 ST, N-12 WT pipe, (ASTM F2306 and AASTHO M252/M294 Type S pipes) are shown in Table 2 for a variety of backfill conditions. Maximum Cover limits for ADS Single Wall pipe, (ASTM F405/F667 and AASHTO M252/M294 Type C pipes) are shown in Table 3.

Table 2 and Table 3 were developed assuming pipe is installed in accordance with ASTM D2321 and the *Installation* section (Section 5) of the Drainage Handbook. Additionally, the calculations; assume zero hydrostatic load, incorporate the maximum safety factors represented in structures section of the Drainage Handbook, and assume the native soil is of adequate strength and is suitable for installation. For applications requiring fill heights greater than those shown in Table 2 and Table 3, contact the ADS Regional Engineering or Application Engineering departments.

Table 2
Maximum Cover for ADS N-12, N-12 ST, and N-12 WT Pipe, ft (m)

Diameter in (mm)	Class 1		Class 2			Class 3		
	Compacted	Dumped	95%	90%	85%	95%	90%	85%
4 (100)	44 (13 4)	14 (4.3)	29 (8 8)	20 (6.1)	14 (4 3)	21 (6.4)	15 (4.6)	13 (3.9)
6 (150)								
8 (200)	40 (12 2)	13 (3 9)	27 (8.2)	18 (5.5)	13 (3 9)	19 (5.8)	14 (4.2)	12 (3.7)
10 (250)								
12 (300)	43 (13 1)	15 (4 6)	29 (8.8)	20 (6.1)	15 (4 6)	21 (6.4)	16 (4.9)	14 (4.2)
15 (375)	45 (13 7)	15 (4.6)	30 (9 1)	21 (6.4)	15 (4 6)	22 (6.7)	16 (4.9)	15 (4.6)
18 (450)	40 (12 2)	13 (3.9)	27 (8.2)	19 (5.8)	13 (3 9)	19 (5.8)	14 (4.2)	12 (3.7)
24 (600)	36 (11.0)	12 (3.7)	25 (7.6)	17 (5.2)	12 (3.7)	17 (5.2)	12 (3.7)	11 (3.4)
30 (750)	29 (8 8)	10 (3.0)	21 (6.4)	14 (4.2)	10 (3.0)	15 (4.6)	10 (3.0)	9 (2.7)
36 (900)	34 (10 4)	10 (3.0)	23 (7.0)	15 (4.5)	10 (3 0)	16 (4.9)	11 (3 4)	9 (2.7)
42 (1050)	31 (9 4)	10 (3.0)	23 (7.0)	15 (4 5)	10 (3.0)	16 (4.8)	11 (3.3)	9 (2 7)
48 (1200)	30 (9.1)	8 (2.4)	20 (6.1)	13 (3 9)	8 (2.4)	14 (4.2)	9 (2.7)	8 (2.4)
54 (1350)	*33 (10 1)*	*9 (2 7)*	*22 (6 7)*	*14 (4 2)*	*9 (2 7)*	*15 (4 5)*	*10 (3 0)*	*8 (2 4)*
60 (1500)								

Notes

1. *Results based on calculations shown in the Structures section of the ADS Drainage Handbook. Calculations assume no hydrostatic pressure and a density of 120 pcf (1926 kg/m^3) for overburden material.*
2. *Installation assumed to be in accordance with ASTM D2321 and the Installation section of the Drainage Handbook*
3. *Backfill materials and compaction levels not shown in the table may also be acceptable. Contact ADS for further detail.*
4. *Material must be adequately "knifed" into haunch and in between corrugations. Compaction and backfill material is assumed uniform throughout entire backfill zone*
5. *Compaction levels shown are for standard Proctor density*
6. *For projects where cover exceeds the maximum values listed above, contact ADS for specific design considerations.*

7. *Calculations assume no hydrostatic pressure. Hydrostatic pressure will result in a reduction in allowable fill height. Reduction in allowable fill height must be assessed by the design engineer for the specific field conditions.*
8. *Fill height for dumped Class I material incorporate an additional degree of conservatism that is difficult to assess due to the large degree of variation in the consolidation of this material as it is dumped. There is limited analytical data on its performance. For this reason, values as shown are estimated to be conservatively equivalent to Class 2, 85% SPD.*

Table 3
Maximum Cover for ADS Single Wall Heavy Duty and Highway Pipe, ft (m)

Diameter in (mm)	Class 1		Class 2			Class 3		
	Compacted	Dumped	95%	90%	85%	95%	90%	85%
4 (100)	41 (12.5)	13 (4.0)	27 (8 2)	18 (5 5)	12 (3 7)	19 (5.8)	13 (4.0)	11 (3.9)
6 (150)								
8 (200)	38 (11.6)	12 (3.7)	25 (7 6)	17 (5 2)	11 (3.4)	18 (5.5)	12 (3.7)	10 (3.0)
10 (250)								
12 (300)								
15 (375)								
18 (450)								
24 (600)	32 (9 8)	11 (3.4)	21 (6.4)	15 (4.6)	10 (3.0)	16 (4.9)	11 (3 4)	9 (2.7)

Notes
1. *Results based on calculations shown in the Structures section of the ADS Drainage Handbook. Calculations assume no hydrostatic pressure and a density of 120 pcf (1926 kg/m^3) for overburden material*
2. *Installation assumed to be in accordance with ASTM D2321 and the Installation section of the Drainage Handbook.*
3. *Backfill materials and compaction levels not shown in the table may also be acceptable Contact ADS for further detail*
4. *Material must be adequately "knifed" into haunch and in between corrugations. Compaction and backfill material is assumed uniform throughout entire backfill zone.*
5. *Compaction levels shown are for standard Proctor density.*
6. *For projects where cover exceeds the maximum values listed above, contact ADS for specific design considerations.*
7. *Calculations assume no hydrostatic pressure. Hydrostatic pressure will result in a reduction in allowable fill height. Reduction in allowable fill height must be assessed by the design engineer for the specific field conditions.*
8. *Fill height for dumped Class I material incorporate an additional degree of conservatism that is difficult to assess due to the large degree of variation in the consolidation of this material as it is dumped. There is limited analytical data on its performance. For this reason, values as shown are estimated to be conservatively equivalent to Class 2, 85% SPD.*

© ADS 2008

Chapter

6

Installation and Construction

Lester H. Gabriel, Ph.D., P.E.

INSTALLATION AND CONSTRUCTION

This chapter provides information on the handling and installation of corrugated polyethylene pipe and fittings in non-pressure applications including most sewers, culverts and subdrainage systems. All types of pipe, regardless of material, must be installed as specified to perform as expected.

The Department of Labor, Occupational Safety and Health Administration (OSHA), Safety and Health Regulations for Construction requires observance of its safety and other guidelines during all phases of construction including foundation preparation, excavation, pipe handling, assembly and backfilling. Stricter requirements may be required in some states and local jurisdictions.

Additional guidelines for the installation of corrugated polyethylene pipe are located in the following standards:

- ASTM D 2321 – Standard Practice for Underground Installation of Thermoplastic Pipe for Sewers and Other Gravity-Flow Applications
- CAN/CSA B182.11 – Recommended Practice for the Installation of Thermoplastic Drain, Storm and Sewer Pipe and Fittings
- AASHTO Section 30 – Thermoplastic Pipe

Importance of Good Installation Practice

The structural design of a buried pipeline presumes the response to loads of a pipe/soil composite structure. Attention to detail on the part of the contractor, transporter and yard handler is essential to insure proper performance. Proper dimensional controls of trench excavation, pipe laying and pipe joining are essential to the success of a project. Correct selection and compaction of the soils composing the pipe/soil envelope are likely to dominate the structural performance of both pipe and soil. The desired constant pressure around the pipe and uniform support of the pipe in the longitudinal direction cannot be achieved in the absence of good practice.

ASTM D 2321, AASHTO Section 30 and CAN/CSA B182.11 define good practices for the installation of thermoplastic pipe. Each recommends proper techniques for trench excavation, placement, bedding and backfill to assure the pipe performs well during its full service life. AASHTO Section 30 is narrowly focused on gravity flow highway and airport drainage pipelines under pavements subjected to heavy wheel loads. Shallow burial is a major consideration. ASTM D 2321 is broadly focused on the general class of gravity flow pipelines, which include both drainage and sanitary facilities. Non-trivial differences exist between the two specifications. Federal, state, county and city governments, or other agencies or organizations of jurisdiction, are

responsible for setting the particular governing standards appropriate to the installation of interest. References to specifications in this chapter are not intended for use in all pipelines at all locations; they are intended only to serve as examples of good practices.

Transportation, Handling and Storage

The contractor should conduct an inspection at the time of delivery to verify that the correct products and the expected quantities are received. Pipe walls and corrugations, gaskets, pipe ends, couplers or other joints, and accessories should be visually inspected for damage such as cuts, gouges, delamination, bulges, flat areas and ovality that may have occurred during shipment. Nominal pipe size, manufacturer's name, date code and applicable standards generally are marked on the pipe.

To prevent injury to construction personnel and damage to pipes, dropping and/or rolling of pipes during unloading and handling should be prevented. Refer to the manufacturer's instructions for unloading of trucks, trailers and railcar platforms. Pipes 18 in. (450 mm) or less may be hand lifted and placed by two people. Larger sizes require mechanical equipment; a minimum of two lifting slings of fabric or plastic, located at third points along the length, is preferred. (Metal chains and cables are to be avoided.) Equipment such as loading booms or forklifts should not be used since they can damage the pipe. Pipe should never be dropped on the ground.

Palletized pipe should remain on pallets for jobsite storage. Non-palletized pipe should be stockpiled for temporary storage in a flat debris-free area clear of construction traffic. Do not remove tie-down straps or bands until the pipes have been secured.

Pipes should be stockpiled on level ground and restricted to a stack height no greater than 6 ft. (2 m). To prevent rolling, blocking should be provided at approximately third points along the length. The removal of any one pipe should not cause shifting or rolling of any of the remaining pipes. The pipe should be supported along its length, avoiding concentrated loads along bell ends. Any protective covering of gaskets should remain until the pipe is ready for installation; exposed gaskets should be protected from dust and exposure to sunlight. Couplers and fittings should be stored flat to prevent distortion and damage. For pipe with attached bells, a common stacking method is to alternate the direction of the pipe lengths so that the bells are not stacked on each other. For smooth interior pipe, nesting smaller pipes inside larger pipes can minimize the storage space. Factory installed gaskets on the spigot may be protected by positioning them between pipe corrugations. Nesting corrugated interior pipe should only be done when the pipe can be easily removed. Extreme summer heat could affect the ovality or shape of some pipes. It is recommended that products be rotated during storage to eliminate such deflection.

Trench Excavation

The soil envelope of a pipe/soil composite structure will reflect the qualities of the native materials beyond the trench walls containing the pipe. If the soil stiffness beyond the trench wall is stiffer than the expected stiffness of the compacted trench fill, then the specified trench width is generally governed by that width necessary to insure the prescribed compaction. For competent in-situ soil, wider than necessary trench widths are not advised. Should the soil stiffness beyond the trench wall be less stiff and/or readily more compressible than the required trench fill, then the trench width is often specified by the customer agency or organization to be wider than usual (see ASTM D 2321). Success of the design of the installation depends, in part, upon realization of the geotechnical information describing the in-situ soil properties. If, during the course of excavation, the soils or soil properties are not what were expected as noted in the contract, the organization responsible for design should be informed. See Figure 6-1 for definitions of trench terms.

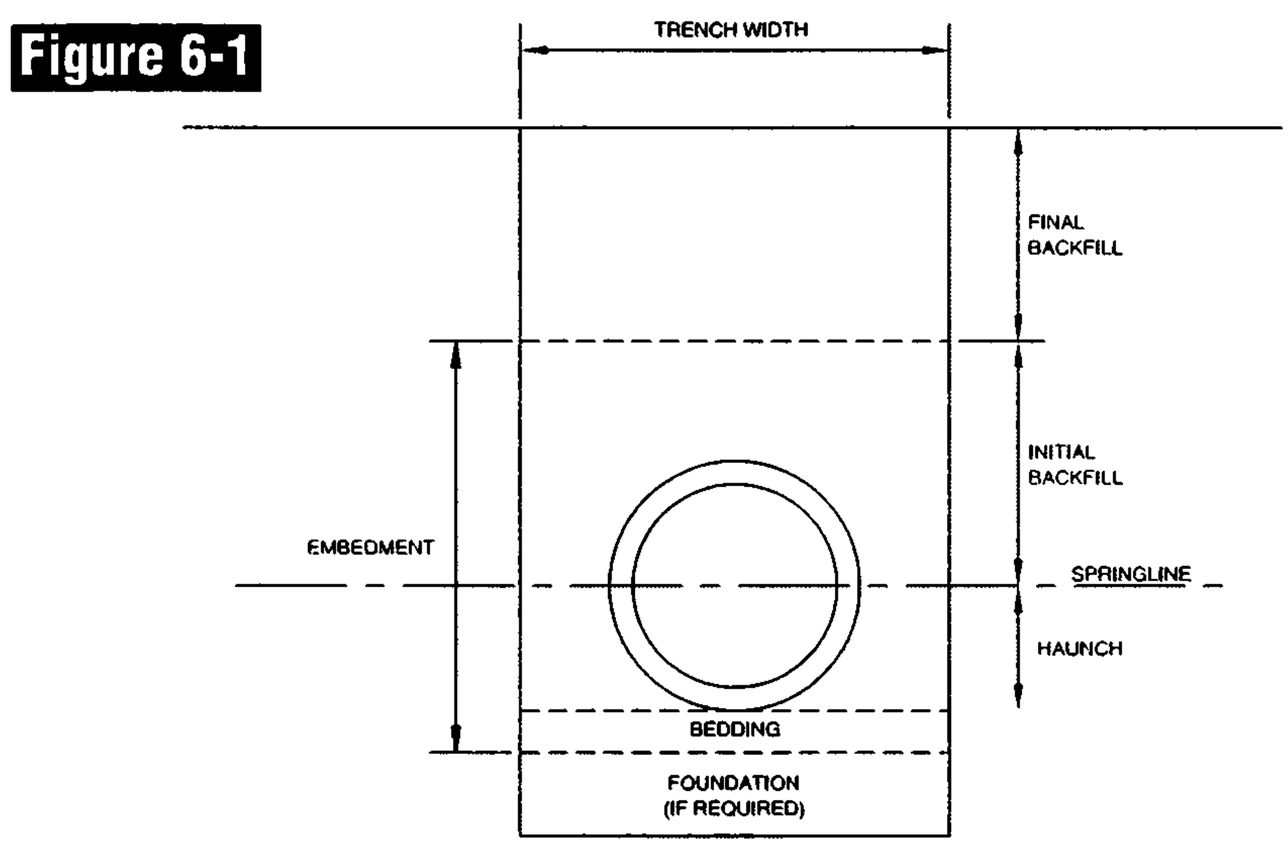

Figure 6-1: Trench Terms

In the absence of unusual conditions, and for purposes of guidance, the provisions of ASTM D 2321 and CAN/CSA B182.11 are noted. According to ASTM D 2321, the trench width should be no wider than what is required to safely and conveniently compact backfill material on either side of the pipe. Trench widths will reflect the selection of backfill material, ease of compacting backfill in the haunch zone (from pipe bottom to springline), compaction methods, pipe diameters and the width of the nearest larger size excavator bucket (for pipes of diameter 10 in. (250 mm) and

smaller). In unsupported unstable soils, knowledge of the depth of cover, the stiffnesses of backfill and in-situ soils, and the size of the pipe are required for a determination of the trench width by the responsible engineer. AASHTO Section 30 requires a minimum trench width of not less than 1.5 times the pipe outside diameter plus 12 in. (300 mm). ASTM D 2321 establishes trench widths as the greater of either the pipe outside diameter plus 16 in. (400 mm) or 1.25 times the pipe outside diameter plus 12 in. (300 mm). See Table 6-1.

Table 6-1

Minimum Trench Width[1]

Inside diameter in. (mm)	Typical Outside Diameter in. (mm)	AASHTO Sec 30 Min. Trench Width in. (mm)	ASTM D 2321 Min. Trench Width in.(mm)
4 (100)	5 (120)	19 (480)	21 (530)
6 (150)	7 (177)	22 (570)	23 (580)
8 (200)	9 (233)	26 (650)	25 (640)
10 (250)	11 (287)	29 (740)	27 (690)
12 (300)	14 (356)	33 (840)	30 (760)
15 (375)	18 (450)	39 (980)	34 (870)
18 (450)	21 (536)	44 (1110)	38 (970)
21 (525)	24 (622)	49 (1240)	43 (1080)
24 (600)	27 (699)	53 (1350)	46 (1180)
30 (750)	34 (866)	63 (1600)	55 (1390)
36 (900)	41 (1041)	73 (1870)	63 (1610)
42 (1050)	48 (1219)	84 (2130)	72 (1830)
48 (1200)	54 (1372)	93 (2360)	80 (2020)
54 (1350)	61 (1577)	105 (2670)	90 (2276)
60 (1500)	67 (1707)	113 (2870)	96 (2440)
72 (1800)	80 (2032)	132 (3350)	112 (2840)

[1] Also refer to manufacturer's recommendations

For two, or more, parallel pipes in a common trench, properly compacted backfill is required between pipes. Minimum spacing between pipes may be satisfied by the following (see Table 6-2):

Table 6-2

Minimum Spacing of Parallel Pipes in a Single Trench

Normal Diameter (D) in. (mm)	Minimum Spacing in. (mm)
≤ 24 (600)	12 (300)
> 24 (600)	D/2

Depending on the type of backfill, the compaction equipment and joining methods, these dimensions may need to be increased.

Stable sidewalls are a requirement for all trench construction. Proper slopes for unbraced walls or appropriate bracing and shoring with sheeting or shields for vertical walls are required. As sheeting and shoring are removed, compaction of material in the void space must proceed with the removal of supports. Geotextiles, or filter fabrics, may be considered in areas where the native soil is very soft and/or migrates easily. Geotextiles designed for strength and stability may help overcome some of the structural deficiencies in soft native soils and allow reductions in trench widths. They may also be placed on the trench bottom and sides to separate native soils and backfill material. All trenches should be backfilled as soon as practicable, but not later than the end of each working day. Also, care should be taken to protect excavated soil from collecting moisture while the trench is prepared and pipe is laid.

Uniformity of the underlying soil that forms the trench bottom will avoid stress concentrations and associated irregular pipe deformations. The condition of short reaches of non-uniform in-situ soils may be remedied by compacting and leveling the native soils. Alternatively, for the full width of the trench, the trench bottom may be over-excavated, often to a minimum depth of 6 in. (150 mm), and replaced with a layer of properly compacted (as specified) imported material. This same alternative is appropriate for the condition of a trench bottom that initially includes the occurrence of large protruding boulders. Where pipe segments are joined with protruding features, such as the bells of bell and spigot joints, recesses constructed in the trench bottom, followed by hand compaction of backfill around the joint, will provide continuous support and uniform bearing.

Differential settlements may compromise the structural integrity of a buried pipe. Trench bottoms should be free of large stones, clumps of soil, frozen soil and debris; they should be slightly over excavated to allow for bedding material. If trench bottoms have less than ideal soil conditions, the preferred method is to remove the poor soil and replace it with soil that will provide predicable behavior. If replacement of the soil is not possible, long reaches of soft-to-hard trench bottoms may be managed with a minimum of two short lengths of pipe with gasket joints that will accommodate the tendency of longitudinal pipe rotation in the transition zone. The use of long lengths of pipe across the transition zone carries the risk of a pipe's joints opening, or cross-sectional distortion in response to unavoidable rotation.

If unexpected deposits of soil that, when wetted, will settle rapidly (dry silts and sands of low density) or swell (expansive clays) are encountered, the contractor is advised to contact the agency of jurisdiction for preferred strategies addressing anticipated problems. Alternatives may include removing the offending material followed by recompaction of the original or higher quality soil, chemical stabilization of the in-situ soil, and/or various schemes for protecting against the accumulation of water in the sensitive regions.

Dry trench conditions are a prerequisite for proper placement and embedment of drainage pipe. Surface water draining towards the trench must be redirected. Water in the trench during pipe installation can create a safety hazard. Maintenance of line and grade is more difficult with a tendency for pipe flotation. Dewatering is required to minimize these disabilities and the likelihood of instability of trench walls and slopes. Ground water should not be permitted to rise above the trench bottom until after the installed pipe is fully bedded and enough fill is in place to prevent flotation. When well points are used to lower the ground water, adjacent areas and structures must be monitored to prevent damaging subsidence. Sheeting and shoring for vertical trench walls should not permit the seepage of water and soil in areas where groundwater is higher than the trench bottom. Any loss of fines due to seepage or dewatering is evidence that soil voids in the vicinity of the pipe are being created. To limit this type of damage to the pipe/soil composite structure, dewatering operations must be monitored for the presence of a significant loss of fines.

Laying and Joining of HDPE Pipes

Pipe sections should be lowered into the trench without damage to the pipe or pipe ends where couplings are to be made. Field cuts may be made with a handsaw or power pipe cutoff saw. For pipes of annular corrugations, square cut only through a corrugation valley, never through a corrugation sidewall. Spirally corrugated pipe should be cut with a cutting guide (a standard coupling is useful) or reference marks

around the circumference. Where skew or bevel cut ends are required, they should be properly reinforced with concrete slope-collars, headwalls or mortared riprap, as is appropriate. When the assembling of pipes is interrupted, closures should be placed at ends of pipes to prevent the introduction of dirt, water, animals and other foreign matter.

Unless otherwise specified, all joints of all drainage pipes are generally required to be soil tight. Joints that will permit the transport of soil at any time during its service life must be expected to cause problems related to erosion of invert and springline support. The integrity of the pipe/soil composite structure risks being severely compromised. Split couplings are often used for soil tight joints; they cannot be used for watertight joints. Gasketed joints (or welded joints) are often used when water tightness is required. Gasketed joints are flexible joints, which are of value in effecting long-radius horizontal and vertical curves without the use of special fittings or skewed cuts. During handling, placement and joining, bell and spigot joints, other gasketed joints, and gaskets must be free of mud, grit and other foreign material in order to enable effective joining and sealing. All manufacturers provide instructions for lubricant type and manner of application to the gasket, and/or the surface in contact with the gasket. Each gasketed joint should be inspected for cleanliness and proper lubrication before mating; a dry unlubricated spot is a source for a leak.

After the joint is aligned, it is necessary to drive the spigot end of one pipe its proper distance into the receiving bell of an adjoining pipe. Pipe should be laid with bells upstream. A bar and block (to protect the bell end) may be used to provide the levered action. This consists of a vertical bar driven into the ground (the fulcrum), bearing against a horizontal wood block that protects the upstream end of the pipe to be moved. Alternatively, mechanical equipment may be used to provide the necessary force. Avoid sudden thrusts of force, which can damage the pipe. The gasket must always remain in its intended groove.

At laterals, catch basins and manholes, attention to proper fit and alignment is required. All pipe manufacturers are prepared to supply tees, wyes, elbows, end caps and other styles of fittings. The design engineer and/or the pipe manufacturer, not the contractor, are usually responsible for connection detail design.

Taps – connections coming into the pipe perpendicular to its axis – may also be needed to connect a downspout or similar small diameter pipe to the storm sewer. For systems not required to be watertight, options include using a fitting designed for such an application. Watertight systems may require additional fittings or adapters. The pipe manufacturer's instructions for insertion and sealing should govern for each pipe size and profile of his/her inventory.

Controlled low strength mortar (CLSM) and controlled density fill (CDF) are flowable fills which – with restraints to prevent pipe flotation – may be used for backfill and bedding. With CLSM backfill, AASHTO Section 30 permits a reduction in trench width to a minimum of the outside diameter plus 12 in. (300 mm). When CLSM is used, the pipe cannot be perforated and all joints shall have gaskets.

- *Bedding* is required to establish line and grade and to provide firm, but not hard, pipe support. Compacted granular material over a flat trench foundation should be spread evenly and compacted uniformly to a firm, but not hard, support. Bedding materials may be Class I, II or III, except that AASHTO Section 30 limits the maximum particle size for bedding material to 1.25 in. (32 mm). Class IA materials (see Table 6-4 for definitions of soil classification) should not be used where groundwater flow is anticipated unless a geotextile trench wrap is used to prevent soil migration. Class III materials are suitable when moisture content is controlled.

  Approximately 4 in. (0.1 m) of bedding should be placed and compacted on the foundation to equalize load distributions along the invert of the pipe. The pipe can be placed on the bedding, then backfilled under the haunches. While not common, a shaped bedding that conforms to the outside of the pipe also can be used. Typically, the bedding equal to one-third the pipe O.D. should be loosely placed, while the remainder shall be compacted to a minimum 90% of maximum density per AASHTO T99 (see Figure 6-2).

Figure 6-2

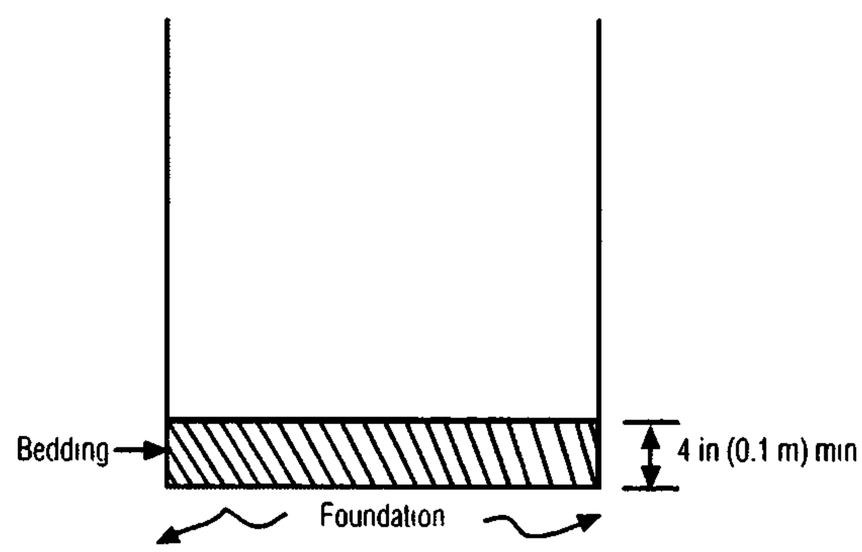

Figure 6-2: Location of Bedding Area of the Backfill Envelope

Figure 6-3

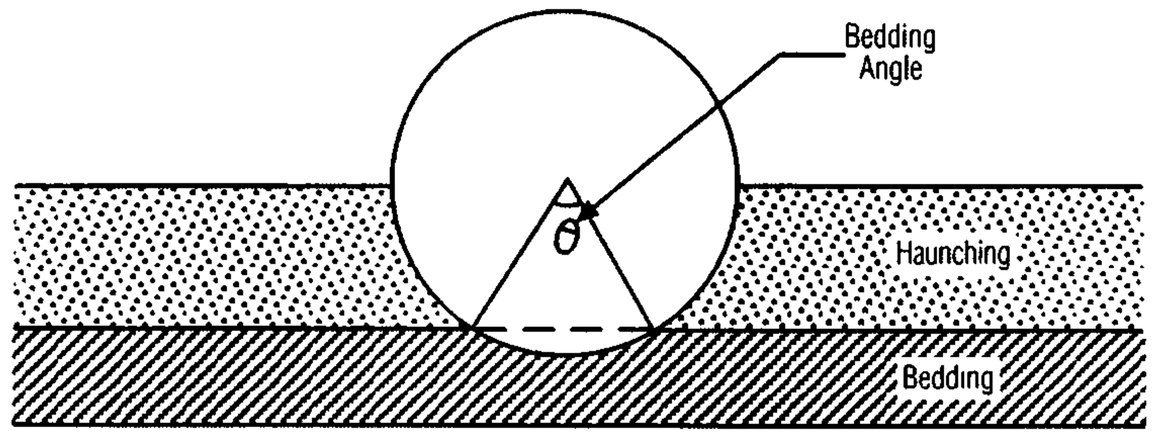

Figure 6-3: Bedding Angle

The bedding constant, (K), is a coefficient that accounts for the bedding support provided to the pipe. It is a function of the bedding angle. Very commonly, a value of 0.1 is assumed. Figure 6-3 and Table 6-3 provide additional details on appropriate values for alternative bedding constants.

Table 6-3

Bedding Constant Values

Bedding Angle, degrees	Bedding Constant
0	0.110
30	0.108
45	0.105
60	0.102
90	0.096
120	0.090
180	0.083

It is not unusual for corrugated polyethylene pipe to be connected to other types of pipe materials. Available options depend on the joint quality required throughout the system and the particular combination of pipe materials. In most storm sewer applications, the pipe can be joined by butting the pipe ends together, wrapping them with a geotextile, and pouring a concrete collar around them. Although such a connection is dependent on contractor expertise, it will generally limit soil intrusion but not provide a watertight joint. Watertight connections between different materials will require additional fittings and adapters. If those options are not acceptable, a manhole should be used to make the transition.

Manholes facilitate changes in pipe size, grade or direction, and cleanout access. Catch basins serve as inlets for surface storm water drainage and cleanout access. Precast concrete manholes and catch basins are manufactured with openings for standard inlet or outlet connections. Usually, the drainage pipe is inserted into a prepared hole slightly oversized to receive a standard size pipe. When a hole must be cut in the concrete, it should be only slightly larger than the pipe it receives. Grouting of the remaining void space secures and seals the connection; non-shrink grout is an option. Manufacturers have other pipe-to-manhole connectors from HDPE to concrete, such as rubber "boots", that provide either water or soil tight performance, depending on the needs of the system.

Special care should be taken when preparing the foundation for manholes, catch basins and the drainage pipes that connect to them. To preclude the possibility of significant differential settlements, compaction of the supporting soil should be firm for both pipe and structure. If the manhole should settle more than the pipe in the trench, the pipe would be forced to assist in the support of the manhole – a possibility not anticipated by the design. Shorter lengths of pipe with end connections that will allow for even minor rotation will benefit the structural performance and improve the efficiency of pipe-to-structure seals. Special care should also be taken with respect to any previously installed pipes, fittings, etc. that may become part of the new system.

Bedding, Haunching, Initial Backfill and Final Backfill

Uniformity of support and proper alignment of the pipe require a trench bottom of stable soils and free of protruding rocks. Good practice often requires over-excavation and replacement of the foundation material with a suitably-graded soil mixture to inhibit migration of fines and subsequent loss of pipe support.

Embedment materials are those used for bedding, haunching and initial backfill (See Figure 6-1). Very often compaction of fill soils in the foundation, bedding, haunch and initial backfill zones is limited to 6 in. (150 mm) layers (after compaction). AASHTO Section 30 requires a minimum of 8 in. (200 mm) layers before compaction.

The depth of the trench is dictated by the geography of the site and the pipe slope required. However, if an adequate foundation for the pipe is not available at the desired depth, additional excavation will be required. Rock outcroppings, very soft soils such as muck, and other similar materials do not provide proper support. They should be removed and replaced with suitable granular material. A soils engineer should be consulted for conditions of unyielding material or soft soils.

- The *haunching* area of the backfill envelope provides the majority of the resistance against soil and traffic loadings. The backfill material should be installed uniformly in layers, or lifts, on each side of the pipe. Larger, more angular backfill materials can usually be placed in thicker layers than materials with smaller, rounder particles. The backfill should be shoveled under the pipe, taking care to fill voids. If compaction is required, it should be conducted in such a way that the pipe alignment is not disturbed. Backfill construction should continue up to the pipe springline to complete the haunch area.

  Haunch materials may be Class I, II or III; they must be compacted to a minimum 90 percent standard Proctor. Voids and haunch areas are to be hand filled when Class IA materials are used.

- *Initial backfill* materials must provide adequate pipe support and protect the pipe from stones or cobbles in the final backfill. Initial backfill extends a minimum of 6 in. (150 mm) above the crown of the pipe. Class I, II, III and low plasticity Class IVA materials may be used. In practice, use of Class IVA fine-grained, inorganic, low to medium plasticity materials (ML and CL) is discouraged since compaction must take place at or near optimum moisture content to achieve the required density and thereby provide proper pipe support. Because these materials may not be suitable under high fills, surface wheel loads, or heavy construction equipment, they are used only under the direction of the responsible engineer. High plasticity clays and silts (Class IVB and all Class V materials) are not recommended for initial backfill. Class III materials are suitable only in dry trench conditions.

  Table 6-4 summarizes soil classifications. See ASTM D 2321 for complete details. (Also see AASHTO M 145 for details of that agency's soil classifications.)

Table 6-4

Backfill Class and Quality

Pipe Embedment Material						E', psi (kPa) for Degree of Embedment Compaction				
ASTM D 2321*		ASTM D 2487		AASHTO M43 Notation	Min. Std. Proctor Density (%)	Lift Placement Depth	Dumped	Slightly < 85%	Moderate 85% - 95%	High > 95%
Class	Description	Notation	Description							
IA	Open-graded, clean manu-factured aggregates	N/A	Angular crushed stone or rock, crushed gravel, crushed slag large voids with little or no fines	5 56	Dumped	18" (0 45 m)	1000 (6,900)	3000 (20,700)	3000 (20,700)	3000 (20,700)
IB	Dense-graded, clean manu-factured, processed aggregates	N/A	Angular crushed stone or other Class IA material and stone/sand mixtures, little or no fines							
II	Clean, coarse-grained soils	GW	Well-graded gravel gravel/sand mixtures, little or no fines	57 6 67	85%	12" (0 30 m)	N/R	1000 (6,900)	2000 (13,800)	3000 (20,700)
		GP	Poorly graded gravel gravel/sand mixtures, little or no fines							
		SW	Well-graded sands, gravelly sands, little or no fines							
		SP	Poorly graded sands, gravelly sands, little or no fines							
III	Coarse-grained soils with fines	GM	Silty gravels, gravel/sand/silt mixtures	Gravel and sand with <10% fines	90%	9" (0 20 m)	N/R	N/R	1000 (6,900)	2000 (13,800)
		GC	Clayey gravels, gravel/sand/clay mixtures							
		SM	Silty sands, sand/ silt mixtures							
		SC	Clayey sands, sand/clay mixtures							
IVA**	Inorganic fine-grained soils	ML	Inorganic silts and very fine sands, rock flour, silty or clayey fine sands, silts with slight plasticity				N/R	N/R	N/R	1000 (6,900)
		CL	Inorganic clays of low to medium plasticity, gravelly, sandy or silty clays, lean clays							
IVB	Inorganic fine-grained soils	MH	Inorganic silts, macaceous or diamaceous fine sandy or silty soils, elastic soils				N/R	N/R	N/R	N/R
		CH	Inorganic clays of high plasticity, fat clays							
V	Organic or highly organic soils	OL	Organic silts and organic silty clays of low plasticity				N/R	N/R	N/R	N/R
		OH	Organic clays of medium to high plasticity, organic silts							
		PT	Peat and other high organic soils							

N/R Use not recommended by ASTM D 2321 for part of the backfill envelope
*Refer to ASTM D 2321 for more complete soil descriptions
**Use under the direction of a soils expert

Compaction Strategies and Equipment

As has been noted in earlier chapters, the performance of flexible pipe largely depends on the quality of the compacted fill in the embedment zone. The denser the fill, the more likely gravity loads of surcharge and live wheel loads will be attracted away from the pipe by the soil adjacent to the pipe. Furthermore, the denser the fill the lesser the tendency towards pipe ovality. Density is measured in kg/m^3, Mg/m^3 or in lb/ft^3.

A flexible pipe will perform in a stable and predictable manner as a pipe/soil composite structure when properly bedded throughout the embedment zone (Figure 6-1). After first connecting the pipe and checking for grade and alignment, haunching material at the underside of the pipe (5 o'clock and 7 o'clock locations) should be uniformly placed and tamped to the required compacted density before placing the remainder of the embedment materials. Properly compacted soils in these haunch locations can prevent pipe deformations. For all pipe materials, good construction practices require uniform compaction around the pipe to maintain grade and alignment.

All embedment materials should be worked to insure uniform compaction. Hand-held mechanical tampers are preferred between the pipe and trench wall. If necessary, vibratory equipment is preferred for the clean coarse-grained crushed stone, gravels and sands of Classes I and II. Consolidation of cohesionless material by watering (jetting or puddling) should only be used under controlled conditions and when approved by the engineer. Jumping jacks and walk-behind vibratory rollers, suitable for most classes of embedment and backfill materials, are generally used to provide the vibratory, kneading and impact force needed for soils of fine materials and high plasticity. For some non-free draining borderline Class II, Class III and Class IVA soils, ASTM D 2321 requires the moisture content be held 3% of optimum; AASHTO Section 30 requires a range of –3% to +2%. During placement and compaction of the embedment side fill, care must be taken to avoid elongation of the vertical diameter of the pipe in excess of the manufacturer's recommendation.

Engineers should establish the minimum embedment density based on an evaluation of specific project conditions. Do not assume that the minimum standard Proctor densities listed here are applicable for all projects. ASTM recommends a minimum of 85% standard Proctor for Class II and better soils, 90% for Class III soils and 95% for Class IVA soils. These recommendations are based on attaining an average modulus of soil reaction (E') of 1000 psi. AASHTO Section 30 recommends a minimum of 90% for all soils that meet their structural backfill requirements. At springline, the engineer or manufacturer may recommend a minimum allowable compaction

of 95% standard Proctor density depending upon the specified acceptable limits of deflection. Compaction of the final backfill must satisfy loading, pavement and other requirements in addition to those of the pipe. Final backfill containing boulders or frozen debris should not be placed within 24 in. (600 mm) of the pipe.

When placing and compacting embedment soils, care should be taken to employ methods that will not disturb or damage the pipe. ASTM D 2321 does not permit compaction by hydrohammer unless first approved by the responsible engineer and unless the pipe/soil structure is protected by a minimum of 48 in. (1200 mm) of compacted backfill. Direct contact between the compaction equipment and the pipe should always be avoided. Sufficient backfill to prevent damage should be placed before using heavy compaction or construction equipment directly above the pipe. ASTM D 2321 requires the initial backfill be no less than 6 in. (150 mm) above the crown of the pipe. Amster Howard comments on this requirement and makes the following recommendations:

- Some specifications and standards for flexible pipe require that the compacted embedment continue up to a point 6 to 12 inches (150 to 300 mm) over the top of the pipe. For any compaction method, except saturation and vibration, this means that compaction equipment will be operating extremely close to the top portion of the pipe. When compacting soil at the sides of the pipe, the pipe is affected by the horizontal component of the impact force hitting the soil, which is much less than the vertical force. However, with the compaction equipment over the pipe, the vertical impact force is directed at the pipe and can cause impact damage that may not be readily apparent. Additionally, the pipe flexes as the impact is transmitted through the soil and does not provide a firm base to compact the soil against. Consequently, it is difficult to get high degrees of compaction (over 85% standard Proctor). When a standard or specification calls for 90 to 95% standard Proctor in this area over the pipe, attaining that degree of compaction is extremely rare for most types of flexible pipe.

- To reduce impact damage when the backfill soil is compacted (as under roads, landing strips, etc.), there should be at least 12 in. (300 mm) of cover over the pipe before using hand-held or walk behind compaction equipment, and at least 3 ft. (1 m) of cover before using ride-on equipment.

- These comments about compacting directly over the top of the pipe do not apply if the saturation and vibration method of compacting cohesionless, free-draining material is used. Similarly, filling up the trench with a material such as flowable fill does not create any of the (above) problems.

Unless protected by sufficient cover, heavy construction equipment and other vehicles may damage the pipe/soil structure. Before allowing such traffic, the responsible engineer should establish a minimum depth of compacted backfill above the pipe. For embedment materials compacted to comply with the ASTM D 2321 densities noted previously, it is recommended to use the greater of one pipe diameter or 24 in. (600 mm) for Class IA and IB materials, and one pipe diameter or 36 in. (900 mm) for Class II, III and IVA materials.

Ground water and drainage flow during and after construction may cause migration of fines when coarse and open-graded material is placed adjacent to a finer material, often the trench wall. A degradation of the pipe/soil composite structure with unacceptable deflections can be the result. In some cases a stone filter or geotextile filter fabric along the fine soil boundary may be used to minimize such migration. For particular applications and related soil parameters, geotextile manufacturers can provide guidance on appropriate products.

System Inspection and Field Testing

Pipe installation, like any other engineered system, can benefit from frequent inspections to ensure that the pipe is installed according to specification. Timely inspections are required during construction to insure compliance. Performance inspections are required after completion of the work.

Attaining the specified degree of compaction is essential for the satisfactory performance of the pipe. Standard ASTM tests define the materials, processes and procedures for determining in-place field density tests by the following methods: sand cone, nuclear, sand replacement, water replacement, rubber balloon, drive cylinder and sleeve.

During construction, an experienced inspector can visually detect departures from proper alignment, grade, permissible deflections and unexpected deformations, as well as faulty joints, taps and other connections. Closed circuit television (CCTV) can be used to inspect small diameter pipes, sanitary sewer pipes and pipes which may present safety hazards. This procedure is very common in the sanitary sewer market. Problems should be remedied as soon as discovered. TV cameras should be capable of scanning the full extent of joints.

The engineer may require additional testing of the pipe's deflection performance. For pipes large enough for entry of personnel, diameter changes may be determined by direct measurement. For smaller diameter pipes, a mandrel may be pulled from manhole to manhole. As long as the deflection does not exceed the mandrel

dimensions, it will go through the pipe. For this reason, mandrels are sometimes referred to as go/no go devices. Information obtained from mandrel tests can easily be misinterpreted, so a great deal of caution should be used when interpreting the findings. Mandrels may not be able to pass through pipe for a variety of reasons unrelated to deflection, such as blockage caused by debris, protrusion of fittings, joint misalignment, and grade changes. Manholes must be large enough to accept an assembled mandrel. It is extremely cumbersome to use mandrels to test pipe larger than 24 in. (600 mm). Visual inspection or CCTV is preferred for pipes larger than 24 in. (600 mm).

In the event of isolated areas of deflection greater than specification limits, re-rounding of the pipe with special equipment, without any excavation, should be considered. Long lengths of pipe with deflection levels greater than permitted are most likely due to compaction deficiencies. Material around the pipe may have to be excavated and replaced with proper material, properly compacted. A pipe that has not deflected to the point of reverse curvature can be re-rounded and reused.

To assure watertight joints in sanitary sewers and some storm sewers in environmentally sensitive areas, joints may need to be pressure tested after installation. Air or water can be used, although air is the most common because of safety considerations. Test requirements may vary from region to region, but most require the pipe to be pressurized to at least 3.5 psi (24.1 kPa) and held for a period of time based on the length and diameter of pipe. A small drop in pressure is usually permitted. See ASTM F 1417 and CAN/CSA B182.11 for more detailed information.

Summary of Pipeline Installation Considerations

The successful performance of buried pipelines of all materials is dependent on the interest, care and attention to detail on the part of the contractor. Installation contractors should have a basic understanding of the pipe/soil composites structure. This will enable the contractor to anticipate problems that may arise from poor construction practice not otherwise recognized as such. The following are the key areas of consideration:

- Proper excavation and preparation of the trench will inhibit unanticipated longitudinal and cross-sectional strains and stresses in the pipe. The buried pipe is sensitive to uniformity of the type and density of material of the trench bottom and sidewalls. Unexpected pockets or reaches of rocks, boulders or low-density soils encountered in the excavation should be reported. To avoid differential settlements being resisted by the pipe, shorter sections of pipe should bridge the transitions where different foundation soils meet.

- Standing or flowing water in the trench will soften the toe of the sidewall and increase the likelihood of unstable sidewalls and slopes. Ground water control should ensure a dry trench until the trench backfill is sufficient to prevent flotation of the pipe. Maintaining ground water control until backfilling is complete is preferred. To maintain the integrity of the in-situ soil in the vicinity of the trench, pumped water should be reasonably free of fines. Surface waters should be diverted away from the trench.

- Water flowing along the exterior of the pipe should be expected to erode compacted trench backfill and/or trench sidewall support for the pipe. In the case of free-draining granular trench backfill located in groundwater of any form, intermittent impervious trench dams (or plugs) of compacted cohesionless materials should be included to still the flowing water.

- Uniform compaction of embedment materials along the length of the pipe will distribute the reaction at the underside of the pipe and inhibit excessively large deflections of the pipe's cross-section. To assure proper final compacted soil densities, trench braces, shields and boxes must be removed prior to the completion of the compaction.

- Uniform support for the pipe is essential. Intermittent supports should not be used to establish the grade line. Clearance should be provided at protruding joints (bell and spigot, wrap-around joint couplings) of the pipe to prevent the likelihood of heavy and excessive "point" loads to these joints.

- Inspection helps insure that the pipe is installed according to project requirements. The installation integrity can usually be verified with a visual inspection, or CCTV in inaccessible situations. Deflection tests using mandrels are an alternative.

- Watertight, nonpressure systems may require pressure testing according to recognized procedures after installation to verify performance.

Bibliography

AASHTO Section 30 – Thermoplastic Pipe.

AASHTO M 145 – Classification of Soils and Soil-Aggregate Mixtures for Highway Construction Purposes.

ASTM D 1556 – Density of Soil In Place by the Sand Cone Method.

ASTM D 2167 – Density of Soil In Place by the Rubber Balloon Method.

ASTM D 2321 – Standard Practice for Underground Installation of Thermoplastic Pipe for Sewers and Other Gravity-Flow Applications.

ASTM D 2922 – Density of Soil and Soil-Aggregate In Place by Nuclear Methods (Shallow Depth).

ASTM D 2937 – Density of Soil In Place by the Drive-Cylinder Method.

ASTM D 4564 – Density of Soil In Place by the Sleeve Method.

ASTM D 4914 – Density of Soil and Rock In Place by the Sand Replacement Method in a Test Pit.

ASTM D 5030 – Density of Soil and Rock In Place by the Water Replacement Method in a Test Pit.

ASTM F 1417 – Standard Test Method for Installation Acceptance of Plastic Gravity Sewer Lines Using Low-Pressure Air.

CAN/CSA B182.11 – Recommended Practice for the Installation of Thermoplastic Drain, Storm and Sewer Pipe and Fittings.

Howard, Amster, *Pipeline Installation,* Relativity Publishing, Lakewood, Colorado, 1996.

Notes

CITY OF ALBUQUERQUE

based on DRC 7-21-09

April 7, 2009

(2) include sht 35 from work order into sheet set plan

(1) add note to plat that tract is not to be

Gregory J. Krenik, P.E.
Mark Goodwin & Associates, PA
P.O. Box 90606
Albuquerque, NM 87199

Re: Volterra Village Drainage Report and Grading Plan, Engineer's Stamp dated 4-7-09 (M21/D015C)

(3) pond maintenance

Dear Mr. Krenik,

Based upon the information provided in your submittal received 4-7-09, the above referenced report and plan are approved for Preliminary Plat and Site Plan action by the DRB with the following comments:

NOT shown

- Portions of the slope between Juan Tabo Blvd and Block 1 Lots 1-6 are steeper than 3:1. The grade down to Juan Tabo is to be less than equal to 3:1. Provide as-built grades in this area for determination.
- Change the Grate elevation on Sheet 2 of 6 for grate Keyed Note 12 to 68.67.
- The area between the retail building (F.F. 69.67) and Juan Tabo Blvd. should be considered for a water harvesting area/sedimentation pond.
- The storm drain in the easement between Forego Rd and Cicada Rd is at too small an angle to get into the inlet on Juan Tabo. A suitable configuration can be determined at DRC.
- The 78 contour on lots 19 and 20 in Block 7 (Borrego Dr) is too high.
- NO — The storm drain in Borrego may need to be extended further up the street because the EGL is higher than the curb and the velocity is greater then 3 ft/sec.
- Provide a crossing structure (concrete dip, culvert, etc...) for the offsite drainage to cross the trail near the pond. A rip-rap swale into the pond would also be beneficial.
- The rundown from Monachos Rd to the pond will most likely be removed. I realize the speed table was required by Open Space. Hydrology/Traffic Operations will work with Open Space on this matter. Per our discussion 4-7-09, there is a high point in Monachos Rd near the property line.

Comments on site grading are to be addressed/work completed for Final Plat approval.

PO Box 1293
Albuquerque
NM 87103
www.cabq.gov

CITY OF ALBUQUERQUE

Sincerely,

Curtis A. Cherne, P.E.
Senior Engineer, Planning Dept.
Development and Building Services

C: file
Brad Bingham

PO Box 1293

Albuquerque

NM 87103

www.cabq.gov

DRAINAGE AND TRANSPORTATION INFORMATION SHEET
(Rev. 12/05)

D015E

PROJECT TITLE: Volterra Village ZONE MAP/DRG. FILE # M21 & M22
DRB#: 1004073 EPC#: 08EPC-40104 & EPC-40101 WORK ORDER#:

LEGAL DESCRIPTION: Tract 4-A, Juan Tabo Hills, Unit 1
CITY ADDRESS:

ENGINEERING FIRM: Mark Goodwin & Associates, PA CONTACT: Gregory J. Krenik
ADDRESS: P.O. Box 90606 PHONE: 828-2200
CITY, STATE: Albuquerque, NM ZIP CODE: 87199

OWNER: JTH, LLC CONTACT: Scott Grady
ADDRESS: P.O. Box 1443 PHONE: 892-5533
CITY, STATE: Corrales, NM ZIP CODE: 87048

ARCHITECT: Dekker/Perich/Sabatini CONTACT: Sarah Zahm
ADDRESS: 7601 Jefferson NE, Suite 100 PHONE: 761-9700
CITY, STATE: Albuquerque, NM ZIP CODE: 87109

SURVEYOR: Cartesian Surveys CONTACT: Will Plotner, Jr.
ADDRESS: 2104 Southern Blvd. SE PHONE: 896-3050
CITY, STATE: Rio Rancho, NM ZIP CODE: 87124

CONTRACTOR: CONTACT:
ADDRESS: PHONE:
CITY, STATE: ZIP CODE:

TYPE OF SUBMITTAL:
X DRAINAGE REPORT
___ DRAINAGE PLAN 1st SUBMITTAL
X DRAINAGE PLAN RESUBMITTAL
___ CONCEPTUAL G & D PLAN
X GRADING PLAN
___ EROSION CONTROL PLAN
___ ENGINEER'S CERT (HYDROLOGY)
___ CLOMR/LOMR
___ TRAFFIC CIRCULATION LAYOUT
___ ENGINEER/ARCHITECT CERT (TCL)
___ ENGINEER/ARCHITECT (DRB SITE PLAN)
___ OTHER

CHECK TYPE OF APPROVAL SOUGHT:
___ SIA/FINANCIAL GUARANTEE RELEASE
X PRELIMINARY PLAT APPROVAL
___ S. DEV. PLAN FOR SUB'D APPROVAL
X S. DEV. FOR BLDG. PERMIT APPROVAL
___ SECTOR PLAN APPROVAL
___ FINAL PLAT APPROVAL
___ FOUNDATION PERMIT APPROVAL
___ BUILDING PERMIT APPROVAL
___ CERTIFICATE OF OCCUPANCY (PERM)
___ CERTIFICATE OF OCCUPANCY (TEMP)
X GRADING PERMIT APPROVAL
___ PAVING PERMIT APPROVAL
___ WORK ORDER APPROVAL
___ OTHER (SPECIFY)

APR 07 2009
HYDROLOGY SECTION

WAS A PRE-DESIGN CONFERENCE ATTENDED:
___ YES
X NO
___ COPY PROVIDED

SUBMITTED BY: Gregory J. Krenik, PE DATE: 4-7-09

Requests for approvals of Site Development Plans and/or Subdivision Plats shall be accompanied by a drainage submittal. The particular nature, location and scope to the proposed development define the degree of drainage detail. One or more of the following levels of submittal may be required based on the following:

1. **Conceptual Grading and Drainage Plan**: Required for approval of Site Development Plans greater than five (5) acres and Sector Plans.

2. **Drainage Plans**: Required for building permits, grading permits, paving permits and site plans less than five (5) acres.

3. **Drainage Report**: Required for subdivision containing more than ten (10) lots or constituting five (5) acres or more.

CITY OF ALBUQUERQUE

TO: Greg Krenik
FAX: 797-9539
2 pages

March 10, 2009

Gregory J. Krenik, P.E.
Mark Goodwin & Associates, PA
P.O. Box 90606
Albuquerque, NM 87199

Re: Volterra Village Drainage Report and Grading Plan, Engineer's Stamp dated 2-13-09 (M22/D015C)

Dear Mr. Krenik,

Based upon the information provided in your submittal received 2-20-09, the above referenced report and plan cannot be approved for Preliminary Plat or Site Plan action by the DRB until the following comments are addressed:

- Provide basins with land treatment percentages as the starting point for the drainage analyses. Basins to correlate with inlets/discharge points. Show graphically on the Grading Plan or separate plan. Include offsite basins (northeast of project and Monachos Rd).
- Please update the report to reflect the current street names.
- Why is the grade at the north end of Gulfstream Dr at 76.00, while the grade south of there is at 75.00?
- Provide contours in the open space east of the north end of Gulfstream Dr.
- A 12" diameter stand pipe is shown in the pond at the north end of Gulfstream, but a storm drain is not shown. The grade down to this pond is approximately 12%. This will produce an erosive velocity. Should bank protection be used on the sides of the pond where this water enters?
- The 5 foot private drainage easement is not wide enough. The easement should cover the entire storm drain, including inlets. The private storm drain will require covenants and a maintenance agreement.
- Do roof flows enter the courtyards for "C" buildings? Show direction of roof lows for these lots.
- Label storm drain sizes on the plan. Show the storm drain in Juan Tabo.
- Show/label retaining walls.
- Provide a "Typical Lot" for all lot types. About 2/3 of the lots do not have grades in the corners.
- Provide Finished Floor elevations for the detached garages.
- There is a "00.00" spot elevation in the Typical Lot Layout for "C" Buildings, which appears to be incorrect.

PO Box 1293

Albuquerque

NM 87103

www.cabq.gov

CITY OF ALBUQUERQUE

- Side yards north of Silver Charm Rd are shown straight graded in some of the foundations. A swale should intercept this flow. Provide spot elevations.
- What is the flow down Cavalcade Ave and Cicada Rd to Juan Tabo Blvd? Is there any bypass flow down Forego Rd to Juan Tabo Blvd?

Sincerely,

Curtis A. Cherne

Curtis A. Cherne, P.E.
Senior Engineer, Planning Dept.
Development and Building Services

C: file
Brad Bingham

PO Box 1293

Albuquerque

NM 87103

www.cabq.gov

DRAINAGE AND TRANSPORTATION INFORMATION SHEET
(Rev. 12/05)

M-21/D015C

PROJECT TITLE: Volterra Village ZONE MAP/DRG. FILE # ~~M21 & M22~~
DRB#: 1004073 EPC#: 08EPC-40104 & EPC-40101 WORK ORDER#:

LEGAL DESCRIPTION: Tract 4-A, Juan Tabo Hills, Unit 1
CITY ADDRESS:

ENGINEERING FIRM: Mark Goodwin & Associates, PA CONTACT: Gregory J. Krenik
ADDRESS: P.O. Box 90606 PHONE: 828-2200
CITY, STATE: Albuquerque, NM ZIP CODE: 87199

OWNER: JTH, LLC CONTACT: Scott Grady
ADDRESS: P.O. Box 1443 PHONE: 892-5533
CITY, STATE: Corrales, NM ZIP CODE: 87048

ARCHITECT: Dekker/Perich/Sabatini CONTACT: Sarah Zahm
ADDRESS: 7601 Jefferson NE, Suite 100 PHONE: 761-9700
CITY, STATE: Albuquerque, NM ZIP CODE: 87109

SURVEYOR: Cartesian Surveys CONTACT: Will Plotner, Jr.
ADDRESS: 2104 Southern Blvd. SE PHONE: 896-3050
CITY, STATE: Rio Rancho, NM ZIP CODE: 87124

CONTRACTOR: CONTACT:
ADDRESS: PHONE:
CITY, STATE: ZIP CODE:

TYPE OF SUBMITTAL:
X DRAINAGE REPORT
X DRAINAGE PLAN 1st SUBMITTAL
___ DRAINAGE PLAN RESUBMITTAL
___ CONCEPTUAL G & D PLAN
X GRADING PLAN
___ EROSION CONTROL PLAN
___ ENGINEER'S CERT (HYDROLOGY)
___ CLOMR/LOMR
___ TRAFFIC CIRCULATION LAYOUT
___ ENGINEER/ARCHITECT CERT (TCL)
___ ENGINEER/ARCHITECT (DRB SITE PLAN)
___ OTHER

CHECK TYPE OF APPROVAL SOUGHT:
___ SIA/FINANCIAL GUARANTEE RELEASE ? 1640 + 50
X PRELIMINARY PLAT APPROVAL — 50 + 10 LOT + 100
___ S. DEV. PLAN FOR SUB'D APPROVAL
X S. DEV. FOR BLDG. PERMIT APPROVAL 100
___ SECTOR PLAN APPROVAL
___ FINAL PLAT APPROVAL
___ FOUNDATION PERMIT APPROVAL
___ BUILDING PERMIT APPROVAL
___ CERTIFICATE OF OCCUPANCY (PERM)
___ CERTIFICATE OF OCCUPANCY (TEMP)
X GRADING PERMIT APPROVAL
___ PAVING PERMIT APPROVAL
___ WORK ORDER APPROVAL
___ OTHER (SPECIFY)

WAS A PRE-DESIGN CONFERENCE ATTENDED:
___ YES
X NO
___ COPY PROVIDED

$1790

RECEIVED
FEB 23 2009
20
HYDROLOGY

SUBMITTED BY: Gregory J. Krenik, PE DATE: February 13, 2009

Requests for approvals of Site Development Plans and/or Subdivision Plats shall be accompanied by a drainage submittal. The particular nature, location and scope to the proposed development define the degree of drainage detail. One or more of the following levels of submittal may be required based on the following:

1. **Conceptual Grading and Drainage Plan**: Required for approval of Site Development Plans greater than five (5) acres and Sector Plans.

2. **Drainage Plans**: Required for building permits, grading permits, paving permits and site plans less than five (5) acres.

3. **Drainage Report**: Required for subdivision containing more than ten (10) lots or constituting five (5) acres or more.

Cherne, Curtis

To: Gregory Krenik

Subject: RE: Volterra M21/D015C

Greg,
In general, this comment may help prevent runoff from going up driveways and ramps then washing out the back of curb. I vaguely remember discussing this with you and there is little/no gravel in this area and there is no curve in the street. Therefore, this comment need not be addressed. I will put a copy of this e-mail in the file.

Curtis

From: Gregory Krenik [mailto:Greg@goodwinengineers.com]
Sent: Tuesday, August 04, 2009 10:41 AM
To: Cherne, Curtis
Subject: Volterra M21/D015C

Curtis,
Just a question on your approval letter for this project. I was going through the comments I need to do before Final Plat and came across one I have a question on....I guess it would be #6...the one about the SD in Borrego. On all streets in the subdivision, the EGL is higher than the curb and the velocity is higher than 3 f/s....I don't understand what makes this street different than the others? Could you clarify the comment?
Thanks, Greg

Cherne, Curtis

From: Dourte, Richard H.
Sent: Tuesday, January 19, 2010 12:51 PM
To: 'Peggy Graham'
Cc: Rael, Jane E.; Bingham, Brad L.; Cherne, Curtis
Subject: HDPE/HPPP pipe letter

Attachments: HDPE-HPPP pipe potentent pilot project (3).doc

Peggy,

Attached is a letter that you will receive with respect to the proposed installation of HDPE/HPPP pipe. This letter is basically the same as my earlier letter with a few clarifications and to include the installation of HPPP pipe. You will be receiving a signed copy thru the mail.

Richard

HDPE-HPPP pipe potentent pilot...

CITY OF ALBUQUERQUE

January 19, 2010

Peggy B Graham, P.E.
Regional Engineer
Advanced Drainage Systems, Inc.
5934 E. Hampton Street
Tuscon, AZ, 85712

RE: HDPE/HPPP pipe requirements for demonstration project

Dear Ms. Graham:

In the past, the City of Albuquerque has utilized HDPE pipe for storm drainage applications. To date this pipe has not produced desirable results with respect to storm drainage applications. In one particular case, the section of HDPE pipe had to be completely removed and replaced with RCP pipe. It is unclear at the present on why this type of pipe does not function well for storm water, if it is the pipe or construction methods used for installing this pipe.

In the interest of increasing competitiveness, the City of Albuquerque will allow one more test section for HDPE or HPPP pipe on a privately funded project if the following conditions are met.

1. For main line storm drains pipe diameter shall be 24" through 48" and for lateral storm drains pipe diameter shall be 18" in diameter.
2. The pipe may be located in the right-of-way under pavement in a street with a classification of collector or less.
3. The pipe manufacturer must supply the City of Albuquerque with a letter of credit for the pipe that is effective for an additional four years after the contractor's 1-year warranty period. Any damage to the pipe during the first year will be covered by the contractor's warranty. Any damage to public infrastructure or to the pipe due to pipe failure from year two through five will be covered by the pipe manufacturer with the following exclusions: boring through the pipe by another party, damage inflicted by another party during excavation for repair, replacement or installation of another utility, intentional arson.
4. An employee of the pipe manufacturer or qualified representative will observe and approve the pipe installation.
5. The installation procedures will be in accordance with ASTM D2321, and Manufacturer requirements.
6. The pipe manufacturer will videotape the pipe installation and provide a copy to the City.
7. The City of Albuquerque will oversee the contractor perform infiltration/exfiltration or air testing no less than 30 days after installation. The infiltration/exfiltration testing will be per ASTM C969 and the air test pr ASTM C924.

PO Box 1293
Albuquerque
NM 87103
www.cabq.gov

8. The contractor during the one year warranty will repair or replace any section of pipe, at no charge to the City of Albuquerque, which has exceeded a criterion of 7.5% deflection and/or has significant soil infiltration at the joints. Deflection measurements are based on the nominal inside diameter minus manufacturing tolerances minus 7.5% and shall be measured no less than 30 days after installation for HDPE pipe. The tolerances for HPPP shall not exceed the manufacturers specifications. All dimensions are per AASHTO M294.

All construction methods and design plans will need to meet the City of Albuquerque standards and be processed through the Design Review Committee.

If the pipe does not meet the above identified requirements at the end of this 5 year performance period, the pipe manufacturer shall be required to have this section of pipe replaced with reinforced concrete pipe (or other City approved material) of equal size. The letter of credit shall enable the City to call on this guarantee to replace the pipe if pipe manufacturer does not comply with these requirements.

If you have any questions please feel free to call me at 505-924-3999.

Richard Dourte, PE
City Engineer
Planning Department

Cc: Michael Riordan, PE, Acting Director of DMD
John Kolessar, PE, Acting Deputy Director of DMD
Wilfred Gallegos, PE, Street Maintenance, DMD
Roland Penttila, PE, Hydrology Div. Manager, DMD
Bradley Bingham, PE, Hydrology Manager
Jane Rael, PE, Design Review Manager
Curtis Cherne, PE, Hydrology Section

Current DRC
Project Number _____

FIGURE 12

Date Submitted: 4/08/2009
Date Site Plan Approved: _____
Date Preliminary Plat Approved: 04-08-09
Date Preliminary Plat Expires: 04-08-10
DRB Project No 1004073
DRB Application No.: _____

ORIGINAL

INFRASTRUCTURE LIST

(Rev 9-05)

EXHIBIT "A"

TO SUBDIVISION IMPROVEMENTS AGREEMENT

DEVELOPMENT REVIEW BOARD (D.R.B.) REQUIRED INFRASTRUCTURE LIST

VOLTERRA VILLAGE

PROPOSED NAME OF PLAT AND/OR SITE DEVELOPMENT PLAN

Tract 4A, Juan Tabo Hills, Unit 1

EXISTING LEGAL DESCRIPTION PRIOR TO PLATTING ACTION

Following is a summary of PUBLIC/PRIVATE Infrastructure required to be constructed or financially guaranteed for the above development This Listing is not necessarily a complete listing. During the SIA process and/or in the review of the construction drawings, if the DRC Chair determines that appurtenant items and/or unforeseen items have not been included in the infrastructure listing, the DRC Chair may include those items in the listing and related financial guarantee Likewise, if the DRC Chair determines that appurtenant or non-essential items can be deleted from the listing, those items may be deleted as well as the related portions of the financial guarantees All such revisions require approval by the DRC Chair, the User Department and agent/owner If such approvals are obtained, these revisions to the listing will be incorporated administratively In addition, any unforeseen items which arise during construction which are necessary to complete the project and which normally are the Subdivider's responsibility will be required as a condition of project acceptance and close out by the City

Financially Guaranteed DRC #	Constructed Under DRC #	Size	Type of Improvement	Location	From	To	Construction Certification: Private Inspector	Private P.E.	City Cnst Engineer
			PAVING						
		24'FF	Res Pvmt	Gulfstream Dr	Silver Charm Rd.	Cul-de-Sac	/	/	/
			C&G Both Sides						
		5'	Sidewalk Westside & around cul-de-sac						
		4'	* Sidewalk (east side)						
		26' FF	Res Pvmt	Borrego Dr	Silver Charm Rd	Monachos Rd.	/	/	/
			C&G Both Sides						
		4'	* Sidewalk (both Sides)						
		26' FF	Res Pvmt	Volponi Dr	Silver Charm Rd	Monachos Rd	/	/	/
			C&G Both Sides						
		4'	* Sidewalk (both Sides)						
		24' FF	Res Pvmt	Domino Dr	Silver Charm Rd	Monachos Rd	/	/	/
			C&G Both Sides						
		5'	* Sidewalk (east side)						
		~~24' FF~~	~~Res. Pvmt~~	Domino Dr	Silver Charm Rd	CICADA DR ~~Forego Dr~~	/	/	/
			~~C&G Both Sides~~						
		4'	* Sidewalk (west side)						
		~~24' FF~~	~~Res Pvmt~~	~~Domino Dr.~~	~~Forego Rd.~~	~~Cicada Dr.~~	/	/	/
			~~C&G Both Sides~~						
		~~4'~~	~~Sidewalk (west side)~~						
		10'	Trail in OPEN SPACE (S side) (IN 5TH UNIT 1)	GALLUT FOX	WE ADMINI	COUNT FLEET	/	/	/

Financially Guaranteed DRC #	Constructed Under DRC #	Size	Type of Improvement	Location	From	To	Construction Certification: Private Inspector	Private P.E.	City Cnst Engineer
		26' FF	Res Pvmt	Bull Lea Dr	Silver Charm Rd	Forego Rd	/	/	/
			C&G (both sides)						
		4'	* Sidewalk (both sides)						
		14' FE	Perm. Pvmt	Silver Charm Dr	Gulfstream Dr	Juan Tabo Blvd	/	/	/
			C&G (north side)						
		6'	Sidewalk (north side)						
		24' FF	Res Pvmt	Forego Rd	Domino Dr	Terminus	/	/	/
			C&G (both sides)						
		4'	* Sidewalk (north side)						
		5'	Sidewalk (south side)						
		24' FF	Res Pvmt	Cicada Rd	Domino Dr	Juan Tabo Blvd	/	/	/
			C&G (both sides)						
		5'	* Sidewalk (south side)						
		24' FF	Res Pvmt	Cicada Rd	Domino Dr	Volponi Dr	/	/	/
			C&G (both sides)						
		4'	Sidewalk (both sides)						
		32' FF	Res Pvmt	Cavalcade Ave.	East Pl	Juan Tabo Blvd	/	/	/
			C&G (both sides)						
		4'	Sidewalk (both sides)						
		40' FF	Perm Pvmt	Monachos Rd	East Pl	Juan Tabo Blvd.	/	/	/
			C & G (both sides)						
		4'	Sidwalk (both sides)						
		10'	Stablized crusher fine trail with cossing structure	E Open Space	Cavalcade Ave	N 420' to PL	/	/	/
		6'	Sidewalk (west side) *	Domino Dr 6' Sdwk Esmt	Cicada Rd	Cavalcade Ave	/	/	/
		6'	Sidewalk (west side) *	Domino Dr 6' Sdwk Esmt	Cavalcade Ave.	Monachos Rd	/	/	/
		6'	Sidewalk (north side) *	Cicada Rd 6' Sdwk Esmt	Domino Dr.	Juan Tabo Blvd	/	/	/
		6'	Sidewalk (south side) *	Cavalcade Ave 6' Sdwk Esmt	Juan Tabo Blvd	East 130'	/	/	/
		6'	Sidewalk (north side) *	Cavalcade Ave 6' Sdwk Esmt	Juan Tabo Blvd.	East 100'	/	/	/
		6'	SIDEWALK (SOUTH SIDE) *	CAVALCADE	DOMINO	WEST 80'	/	/	/
		6'	SIDEWALK (NORTH SIDE) *	CAVALCADE	DOMINO	WEST 80'	/	/	/

Financially Guaranteed DRC #	Constructed Under DRC #	Size	Type of Improvement	Location	From	To	Construction Certification: Private Inspector	Private P.E.	City Cnst Engineer
			WATERLINE						
		12"	** REMOVE Exist Waterline	Gulfstream Drive	Silver Charm Rd	Cul-de-sac	/	/	/
		12"	** REPLACE Exist. Waterline	Gulfstream Drive	Silver Charm Rd	Cul-de-sac	/	/	/
		6"	Waterline	Borrego Dr	Silver Charm Rd	Cavalcade Ave	/	/	/
		8"	Waterline	Borrego Dr	Cavalcade Ave	Monachos Rd	/	/	/
		6"	Waterline	Volponi Dr	Silver Charm Rd	Monachos Rd	/	/	/
		8"	Waterline	Domino Dr	Silver Charm Rd	Monachos Rd	/	/	/
		8"	Waterline	Cavalcade Ave	Gulfstream Dr	Borrego Dr	/	/	/
		6"	Waterline	Bull Lea Dr	Silver Charm Rd	Forego Rd	/	/	/
		10"	Waterline	Silver Charm Rd	Gulfstream Dr	Bull Lea Dr	/	/	/
		6"	Waterline	Forego Rd	Domino Dr	Bull Lea Dr	/	/	/
		8"	Waterline	Monachos Rd	Domino Dr	East PL	/	/	/
		4"	Waterline	Forego Rd	Bull Lea Dr	Terminus	/	/	/
		6"	Waterline	Cavalcade Ave	Domino Dr	Juan Tabo Blvd	/	/	/
			SEWER						
		8"	SAS	Gulfstream Dr	Silver Charm Rd	Cul-de-sac	/	/	/
		8"	SAS	Borrego Dr	Silver Charm Rd	Monachos Rd	/	/	/
		8"	SAS	Volponi Dr	Silver Charm Rd	Monachos Rd	/	/	/
		8"	SAS	Domino Dr	Silver Charm Rd	Monachos Rd	/	/	/
		8"	SAS	Bull Lea Dr	Silver Charm Rd	Forego Rd	/	/	/
		8"	SAS	Forego Rd	Domino Dr	Terminus	/	/	/
		8"	SAS	Cavalcade Ave	East Pl	Domino Dr	/	/	/
		12"	** Sanitary Sewer	25' Public SAS Esmt	Juan Tabo Blvd	Gulfstream Dr	/	/	/
		12"	** Sanitary Sewer	Cavalcade Dr	Gulfstream Dr	Barbaro Dr	/	/	/
		12"	** Sanitary Sewer	Barbaro Dr	Cavalcade Dr	Giacomo Ave	/	/	/
		12"	** Sanitary Sewer	Giacomo Ave	Barbaro Dr	Challedon Dr	/	/	/
		12"	** Sanitary Sewer	Challedon Dr	Giacomo Ave	Lot 23 Easmt	/	/	/
		12"	** Sanitary Sewer	Lot 23, Blk 1 Easmt	Challedon Dr	Tract 1-A-6	/	/	/
		12"	** Sanitary Sewer	COA Open Space	Tract 1-A-6	COA Open Space	/	/	/
		8"	** REMOVE Exist SAS	Tract 3-A and 4-A-1	COA Open Space	Juan Tabo Blvd Exist SAS	/	/	/
			STORM DRAIN						
		18" & 24"	Stormdrain	Borrego Dr	Lot 17, Block 7	Monachos Rd	/	/	/
		18" & 24"	Stormdrain	Volponi Dr	Lot 9, Block 5	Monachos Rd	/	/	/
		18" & 24"	Stormdrain	Domino Dr	Lot 10, Block 5	Monachos Rd	/	/	/
		18" & 24"	Stormdrain	20' SD Esmt	Forego Rd	Cicada & Juan Tabo Intersection	/	/	/
		24"	Stormdrain	20' SD Esmt	Gulfstream Dr	Monachos Rd	/	/	/
		18", 24", 30", 36" & 42"	Stormdrain	Monachos Rd	Juan Tabo Blvd	20' SD Esmt	/	/	/
		18"	Stormdrain	Cicada	Lot 11, Block 3	Juan Tabo Blvd	/	/	/

The items listed below are on the CCIP and approved for Impact Fee credits. Signatures from the Impact Fee Administrator and the City User Department is required prior to DRB approval of this listing. The items listed below are subject to the standard SIA requirements.

Financially Guaranteed DRC #	Constructed Under DRC #	Size	Type of Improvement	Location	From	To	Construction Certification: Private Inspector	Private P.E.	City Cnst Engineer
							/	/	/
							/	/	/

Approval of Creditable Items:

Impact Fee Admistrator Signature Date

Approval of Creditable Items:

City User Dept. Signature Date

NOTES

If the site is located in a floodplain, then the financial guarantee will not be released until the LOMR is approved by FEMA.

Street lights per City rquirements.

* Sidewalk to be deferred

** Financially guaranteed with DRB Project No 1007139 and constructed with DRC 756186.

1 Water Infrastructure to include valves, fittings and firehydrants

2 SAS Insfrastructure to include manholes and servuce connections

3 Storm Drain Infrastructure to appurtenances

4 Street Lights per SDPBP

5 Grading & Drainage Certification required per DPM (Prior to release of Financial Guaranty) to include walls as defined on the approved Grading Plan

6 LOMR Required

7 Landscaping is required for public roadways

8 The developers of this site are required to follow the most current version of the "Interim Guidelines for Development within 1000 feet of landfill", a review and approval of the site plan, the propsed construction, design drawings and certification of construction will be required by the Environmental Health Dept., Environmental Services Division, Groundwater & Landfill Sec.

AGENT / OWNER

Gregory J. Krenik, PE
Firm

Mark Goodwin & Associates, PA
Firm

4-8-09
SIGNATURE - date

DEVELOPMENT REVIEW BOARD MEMBER APPROVALS

04-08-09
DRB CHAIR - date

04-08-09
TRANSPORTATION DEVELOPMENT - date

4/8/09
UTILITY DEVELOPMENT - date

Bradley L Bigham 4/8/09
CITY ENGINEER - date

Christina Sandoval 4/8/09
PARKS & GENERAL RECREATION - date

AMAFCA - date

_____ - date

_____ - date

DESIGN REVIEW COMMITTEE REVISIONS

REVISION	DATE	DRC CHAIR	USER DEPARTMENT	AGENT /OWNER
1	5-1-09	L Woodell		

Cherne, Curtis

From: Cherne, Curtis
Sent: Wednesday, March 11, 2009 3:48 PM
To: 'Gregory Krenik'
Subject: RE: Volterra Village G&D Comments

Greg,
This looks OK.
I'm sure your report will/'does address the location and adequacy of the D inlets.

Curtis

From: Gregory Krenik [mailto:Greg@goodwinengineers.com]
Sent: Wednesday, March 11, 2009 3:03 PM
To: Cherne, Curtis
Cc: Bingham, Brad L.
Subject: RE: Volterra Village G&D Comments

OK, I'm fine with all this with some minor exceptions.

The 5' easement...if you want to dig up the pipe you need a box, no room for trench prisms besides, it's all under concrete. Those courtyards are all concrete...don't need dirt to clog up the SD, just a plastic bag from Wal-Mart. We're only installing bathtub drains, just kidding...if I had my way I'd put a 'D' inlet in each courtyard but the owner won't go for that so it'll be somewhere in between.

The outfall to Juan Tabo works....you just need the correct plan to look at. HA! The hydraulics even work with room to spare. The storm drain is actually in an easement in an HOA tract....I believe that was on the plat right next to a SAS easement. Go down to Roger's office and look at the utility plan I gave him at DRB, it's got everything on it. Actually, I think that plan was in the site plan submittal so there should be a copy in Brad's DRB file.

Just so you know up front, we will be installing 'D' inlets in the flowline of some roads because of the lack of curb. That will be a DRC thing but it's a necessary thing.

From: Cherne, Curtis [mailto:CCherne@cabq.gov]
Sent: Wednesday, March 11, 2009 3:42 PM
To: Gregory Krenik
Cc: Bingham, Brad L.
Subject: RE: Volterra Village G&D Comments

Greg,
Brad and I just went through the plan, my comments, and your comments.

The 5' easement could be acceptable if it would be wide enough for the trench prism. Provide trench prism at pipes deepest point in the three lines.
It is acceptable to put the easement on the plat with maintenance and beneficiaries. Still need a Private Facility Drainage Covenant in case a homeowner doesn't perform maintenance, the City can go in and perform the maintenance.

Concerning the lots along Silver Charm. If a CMU wall is built, you could specify a turn block. If the turn block was 6" above grade we may not get sand piles on the sidewalk like on 7 Bar Loop Rd.

The reason I asked for the analysis to begin with basins is that it is difficult to verify your analysis with "...number of lots..". I think you know what the basins are in your head. I just want to see them graphically. You don't have to do the report over again. Probably just add a page or two that has calcs per basin and where the inlet/discharge point is for that basin.

Spot elevations works for the garages.

Brad mentioned that running the storm drain into the inlet in Juan Tabo near Cicada Rd may not work. The pipe is nearly parallel to the back of the inlet and the lateral coming out of the storm drain is only an 18" and may not have capacity. The storm drain that runs north/south south of the inlet is in a lot. Shouldn't it be further west?

Curtis

From: Gregory Krenik [mailto:Greg@goodwinengineers.com]
Sent: Wednesday, March 11, 2009 1:00 PM
To: Cherne, Curtis
Cc: Bingham, Brad L.
Subject: Volterra Village G&D Comments

Curtis,
The 5' private drainage easement can't be any wider because it will encroach into the houses and garages. Why does it need to include the inlets? The idea is to have a drainage easement across the lots. We can show the easement to cover those inlets but it'll only be 5' wide. The owner's of each line will be responsible for the line they drain into....do we need agreements if it's called out on the plat who is responsible for maintenance?

I can't read the top note on the second page because it is in the seal. But those lots will drain to the side. If I don't have to put in a retaining wall I'd rather not. I'd rather turn a block in the courtyard wall.

All but 3 of the other comments I've already addressed in the new report...which you've not seen. It's just doing the entire report over again because of the drainage basin analysis that I have a problem with.

We will show a typical section through the garages because there is a 6" step inside as well as a 2% slope. There is no flat area to call out a FF. We will be calling out spot elevations in the garages to assist with the grading.

The plan will be resubmitted at 30 scale and will be 4 sheets and will include about 4000

additional spots than the plan previously submitted.

I just thought I'd give you a heads up on my thoughts for when you receive the resubmittal.
Greg

Gregory J. Krenik, PE
Vice President
MARK GOODWIN & ASSOCIATES, PA
(505) 828-2200
(505) 235-9338 cell
(505) 797-9539 fax
greg@goodwinengineers.com
website: www.goodwinengineers.com