Federal Emergency Management Agency

Washington, D.C. 20472

October 20, 2008

#204

CERTIFIED MAIL
RETURN RECEIPT REQUESTED

The Honorable Martin J. Chavez
Mayor, City of Albuquerque
P.O. Box 1293
Albuquerque, NM 87103

IN REPLY REFER TO:

Case No.:	09-06-0035P
Community Name:	City of Albuquerque, NM
Community No.:	350002
Effective Date of This Revision:	**October 20, 2008**

Dear Mayor Chavez:

The Flood Insurance Rate Map for your community has been revised by this Letter of Map Revision (LOMR). Please use the enclosed annotated map panel(s) revised by this LOMR for floodplain management purposes and for all flood insurance policies and renewals issued in your community.

Additional documents are enclosed which provide information regarding this LOMR. Please see the List of Enclosures below to determine which documents are included. Other attachments specific to this request may be included as referenced in the Determination Document. If you have any questions regarding floodplain management regulations for your community or the National Flood Insurance Program (NFIP) in general, please contact the Consultation Coordination Officer for your community. If you have any technical questions regarding this LOMR, please contact the Director, Mitigation Division of the Department of Homeland Security's Federal Emergency Management Agency (FEMA) in Denton, Texas, at (940) 898-5127, or the FEMA Map Assistance Center toll free at 1-877-336-2627 (1-877-FEMA MAP). Additional information about the NFIP is available on our website at http://www.fema.gov/nfip.

Sincerely,

Joshua A. Smith, CFM, Program Specialist
Engineering Management Branch
Mitigation Directorate

For: William R. Blanton Jr., CFM, Chief
Engineering Management Branch
Mitigation Directorate

List of Enclosures:

Letter of Map Revision Determination Document
Annotated Flood Insurance Rate Map

cc: Mr. Bradley L. Bingham, P.E., CFM
Floodplain Administrator
City of Albuquerque

Mr. Pavan Toleti
Mark Goodwin & Associates

Mr. Doug Hughes
Mark Goodwin & Associates

Federal Emergency Management Agency

Washington, D.C. 20472

LETTER OF MAP REVISION DETERMINATION DOCUMENT

COMMUNITY AND REVISION INFORMATION		PROJECT DESCRIPTION	BASIS OF REQUEST
COMMUNITY	City of Albuquerque Bernalillo County New Mexico	NO PROJECT	REISSUANCE
	COMMUNITY NO.: 350002		
IDENTIFIER	Amole Channel Phase 1 (NM)	APPROXIMATE LATITUDE & LONGITUDE: 35.039, -106.734 SOURCE: Other DATUM: NAD 83	

ANNOTATED MAPPING ENCLOSURES	ANNOTATED STUDY ENCLOSURES
TYPE: FIRM* NO.: 35001C0336 G DATE: September 26, 2008	NO REVISION TO THE FLOOD INSURANCE STUDY REPORT

closures reflect changes to flooding sources affected by this revision.
IRM - Flood Insurance Rate Map; ** FBFM - Flood Boundary and Floodway Map; *** FHBM - Flood Hazard Boundary Map

FLOODING SOURCE(S) & REVISED REACH(ES)

Amole Arroyo – from approximately 1,500 feet downstream of Blake Road Southwest to the confluence with Snow Vista Channel

Snow Vista Channel – from the confluence with Amole Arroyo to just downstream of Benavides Avenue Southwest

SUMMARY OF REVISIONS

This Letter of Map Revision (LOMR) is a reissuance of a LOMR dated August 24, 2007 (Case No. 07-06-1450P), which revised the Special Flood Hazard Areas (SFHAs), the areas that would be inundated by the base (1-percent-annual-chance) flood, along Amole Arroyo and Snow Vista Channel. However, the new countywide study for Bernalillo County became effective on September 26, 2008. Therefore, this LOMR reissues the August 24 LOMR based on the effective information shown on the FIRM for Bernalillo County, New Mexico and Incorporated Areas dated September 26, 2008. This LOMR does not revise the SFHA boundaries from the August 24 LOMR along the revised reaches.

DETERMINATION

This document provides the determination from the Department of Homeland Security's Federal Emergency Management Agency (FEMA) regarding a request for a LOMR for the area described above. Using the information submitted, we have determined that a revision to the flood hazards depicted in the Flood Insurance Study (FIS) report and/or National Flood Insurance Program (NFIP) map is warranted. This document revises the effective NFIP map, as indicated in the attached documentation. Please use the enclosed annotated map panels revised by this LOMR for floodplain management purposes and for all flood insurance policies and renewals in your community.

This determination is based on the flood data presently available. The enclosed documents provide additional information regarding this determination. If you have any questions about this document, please contact the FEMA Map Assistance Center toll free at 1-877-336-2627 (1-877-FEMA MAP) or by letter addressed to the LOMR Depot, 3601 Eisenhower Avenue, Alexandria, VA 22304. Additional Information about the NFIP is available on our website at http://www.fema.gov/nfip.

Joshua A. Smith, CFM, Program Specialist
Engineering Management Branch
Mitigation Directorate

Federal Emergency Management Agency
Washington, D.C. 20472

LETTER OF MAP REVISION DETERMINATION DOCUMENT (CONTINUED)

COMMUNITY INFORMATION

APPLICABLE NFIP REGULATIONS/COMMUNITY OBLIGATION

We have made this determination pursuant to Section 206 of the Flood Disaster Protection Act of 1973 (P.L. 93-234) and in accordance with the National Flood Insurance Act of 1968, as amended (Title XIII of the Housing and Urban Development Act of 1968, P.L. 90-448), 42 U.S.C. 4001-4128, and 44 CFR Part 65. Pursuant to Section 1361 of the National Flood Insurance Act of 1968, as amended, communities participating in the NFIP are required to adopt and enforce floodplain management regulations that meet or exceed NFIP criteria. These criteria, including adoption of the FIS report and FIRM, and the modifications made by this LOMR, are the minimum requirements for continued NFIP participation and do not supersede more stringent State/Commonwealth or local requirements to which the regulations apply.

NFIP regulations Subparagraph 60.3(b)(7) requires communities to ensure that the flood-carrying capacity within the altered or relocated portion of any watercourse is maintained. This provision is incorporated into your community's existing floodplain management ordinances; therefore, responsibility for maintenance of the altered or relocated watercourse, including any related appurtenances such as bridges, culverts, and other drainage structures, rests with your community. We may request that your community submit a description and schedule of maintenance activities necessary to ensure this requirement.

COMMUNITY REMINDERS

We based this determination on the 1-percent-annual-chance flood discharges computed in the FIS for your community without considering subsequent changes in watershed characteristics that could increase flood discharges. Future development of projects upstream could cause increased flood discharges, which could cause increased flood hazards. A comprehensive restudy of your community's flood hazards would consider the cumulative effects of development on flood discharges subsequent to the publication of the FIS report for your community and could, therefore, establish greater flood hazards in this area.

Your community must regulate all proposed floodplain development and ensure that permits required by Federal and/or State/Commonwealth law have been obtained. State/Commonwealth or community officials, based on knowledge of local conditions and in the interest of safety, may set higher standards for construction or may limit development in floodplain areas. If your State/Commonwealth or community has adopted more restrictive or comprehensive floodplain management criteria, those criteria take precedence over the minimum NFIP requirements.

We will not print and distribute this LOMR to primary users, such as local insurance agents or mortgage lenders; instead, the community will serve as a repository for the new data. We encourage you to disseminate the information in this LOMR by preparing a news release for publication in your community's newspaper that describes the revision and explains how your community will provide the data and help interpret the NFIP maps. In that way, interested persons, such as property owners, insurance agents, and mortgage lenders, can benefit from the information.

This determination is based on the flood data presently available. The enclosed documents provide additional information regarding this determination. If you have any questions about this document, please contact the FEMA Map Assistance Center toll free at 1-877-336-2627 (1-877-FEMA MAP) or by letter addressed to the LOMR Depot, 3601 Eisenhower Avenue, Alexandria, VA 22304. Additional Information about the NFIP is available on our website at http://www.fema.gov/nfip.

Joshua A. Smith, CFM, Program Specialist
Engineering Management Branch
Mitigation Directorate

Federal Emergency Management Agency
Washington, D.C. 20472

LETTER OF MAP REVISION
DETERMINATION DOCUMENT (CONTINUED)

We have designated a Consultation Coordination Officer (CCO) to assist your community. The CCO will be the primary liaison between your community and FEMA. For information regarding your CCO, please contact:

Mr. Frank Pagano
Director, Mitigation Division
Federal Emergency Management Agency, Region VI
Federal Regional Center, Room 206
800 North Loop 288
Denton, TX 76209
(940) 898-5127

STATUS OF THE COMMUNITY NFIP MAPS

We will not physically revise and republish the FIRM for your community to reflect the modifications made by this LOMR at this time. When changes to the previously cited FIRM panel(s) warrant physical revision and republication in the future, we will incorporate the modifications made by this LOMR at that time.

This determination is based on the flood data presently available. The enclosed documents provide additional information regarding this determination. If you have any questions about this document, please contact the FEMA Map Assistance Center toll free at 1-877-336-2627 (1-877-FEMA MAP) or by letter addressed to the LOMR Depot, 3601 Eisenhower Avenue, Alexandria, VA 22304. Additional Information about the NFIP is available on our website at http://www.fema.gov/nfip.

Joshua A. Smith, CFM, Program Specialist
Engineering Management Branch
Mitigation Directorate

Federal Emergency Management Agency
Washington, D.C. 20472

LETTER OF MAP REVISION
DETERMINATION DOCUMENT (CONTINUED)

PUBLIC NOTIFICATION OF REVISION

This revision is effective as of the date of this letter. Any requests to review or alter this determination should be made within 30 days and must be based on scientific or technical data.

This determination is based on the flood data presently available. The enclosed documents provide additional information regarding this determination. If you have any questions about this document, please contact the FEMA Map Assistance Center toll free at 1-877-336-2627 (1-877-FEMA MAP) or by letter addressed to the LOMR Depot, 3601 Eisenhower Avenue, Alexandria, VA 22304. Additional Information about the NFIP is available on our website at http://www.fema.gov/nfip.

Joshua A. Smith, CFM, Program Specialist
Engineering Management Branch
Mitigation Directorate

204

Federal Emergency Management Agency

Washington, D.C. 20472

AUG 2 4 2007

CERTIFIED MAIL
RETURN RECEIPT REQUESTED

The Honorable Martin J. Chavez
Mayor, City of Albuquerque
P.O. Box 1293
Albuquerque, NM 87103

IN REPLY REFER TO:
Case No.: 07-06-1450P
Follows Conditional
Case No.: 05-06-0869R
Community Name: City of Albuquerque, NM
Community No.: 350002
Effective Date of
This Revision: AUG 2 4 2007

Dear Mayor Chavez:

The Flood Insurance Rate Map for your community has been revised by this Letter of Map Revision (LOMR). Please use the enclosed annotated map panel(s) revised by this LOMR for floodplain management purposes and for all flood insurance policies and renewals issued in your community.

Additional documents are enclosed which provide information regarding this LOMR. Please see the List of Enclosures below to determine which documents are included. Other attachments specific to this request may be included as referenced in the Determination Document. If you have any questions regarding floodplain management regulations for your community or the National Flood Insurance Program (NFIP) in general, please contact the Consultation Coordination Officer for your community. If you have any technical questions regarding this LOMR, please contact the Director, Federal Insurance and Mitigation Division of the Department of Homeland Security's Federal Emergency Management Agency (FEMA) in Denton, Texas, at (940) 898-5127, or the FEMA Map Assistance Center toll free at 1-877-336-2627 (1-877-FEMA MAP). Additional information about the NFIP is available on our website at http://www.fema.gov/nfip.

Sincerely,

Emily Hirsch, CFM, Project Engineer
Engineering Management Section
Mitigation Division

For: William R. Blanton Jr., CFM, Chief
Engineering Management Section
Mitigation Division

List of Enclosures:

Letter of Map Revision Determination Document
Annotated Flood Insurance Rate Map

cc: Mr. Bradley L. Bingham, P.E., CFM
City of Albuquerque

Mr. Pavan Toleti
D. Mark Goodwin & Associates

Mr. Doug Hughes, P.E.
D. Mark Goodwin & Associates

 | Issue Date: AUG 2 4 2007 | Effective Date: AUG 2 4 2007 | Case No.: 07-06-1450P | LOMR-APP

Follows Conditional Case No.: 05-06-0869R

Federal Emergency Management Agency

Washington, D.C. 20472

LETTER OF MAP REVISION DETERMINATION DOCUMENT

COMMUNITY AND REVISION INFORMATION		PROJECT DESCRIPTION	BASIS OF REQUEST
COMMUNITY	City of Albuquerque Bernalillo County New Mexico	CHANNEL RELOCATION CHANNELIZATION CULVERT	HYDRAULIC ANALYSIS HYDROLOGIC ANALYSIS NEW TOPOGRAPHIC DATA
	COMMUNITY NO.: 350002		
IDENTIFIER	Amole Channel Phase 1 (NM)	APPROXIMATE LATITUDE & LONGITUDE: 35.039, -106.734 SOURCE: Other DATUM: NAD 27	

ANNOTATED MAPPING ENCLOSURES	ANNOTATED STUDY ENCLOSURES
TYPE: FIRM* NO.: 35001C0336 E DATE: November 19, 2003	NO REVISION TO THE FLOOD INSURANCE STUDY REPORT

losures reflect changes to flooding sources affected by this revision.
RM - Flood Insurance Rate Map; ** FBFM - Flood Boundary and Floodway Map; *** FHBM - Flood Hazard Boundary Map

FLOODING SOURCE(S) & REVISED REACH(ES)

Amole Arroyo - from approximately 1,500 feet downstream of Blake Road Southwest to confluence with Snow Vista Channel

Snow Vista Channel - from confluence with Amole Arroyo to just downstream of Benavides Avenue Southwest

SUMMARY OF REVISIONS

Flooding Source	Effective Flooding	Revised Flooding	Increases	Decreases
AMOLE ARROYO	Zone AO	Contained	NONE	YES
SNOW VISTA CHANNEL	Zone A	Contained	NONE	YES

* BFEs - Base Flood Elevations

DETERMINATION

This document provides the determination from the Department of Homeland Security's Federal Emergency Management Agency (FEMA) regarding a request for a Letter of Map Revision (LOMR) for the area described above. Using the information submitted, we have determined that a revision to the flood hazards depicted in the Flood Insurance Study (FIS) report and/or National Flood Insurance Program (NFIP) map is warranted. This document revises the effective NFIP map, as indicated in the attached documentation. Please use the enclosed annotated map panels revised by this LOMR for floodplain management purposes and for all flood insurance policies and renewals in your community.

This determination is based on the flood data presently available. The enclosed documents provide additional information regarding this determination. If you have any questions about this document, please contact the FEMA Map Assistance Center toll free at 1-877-336-2627 (1-877-FEMA MAP) or by letter addressed to the LOMR Depot, 3601 Eisenhower Avenue, Alexandria, VA 22304. Additional Information about the NFIP is available on our website at http://www.fema.gov/nfip.

Emily Hirsch, CFM, Project Engineer
Engineering Management Section
Mitigation Division

Federal Emergency Management Agency

Washington, D.C. 20472

LETTER OF MAP REVISION DETERMINATION DOCUMENT (CONTINUED)

COMMUNITY INFORMATION

APPLICABLE NFIP REGULATIONS/COMMUNITY OBLIGATION

We have made this determination pursuant to Section 206 of the Flood Disaster Protection Act of 1973 (P.L. 93-234) and in accordance with the National Flood Insurance Act of 1968, as amended (Title XIII of the Housing and Urban Development Act of 1968, P.L. 90-448), 42 U.S.C. 4001-4128, and 44 CFR Part 65. Pursuant to Section 1361 of the National Flood Insurance Act of 1968, as amended, communities participating in the NFIP are required to adopt and enforce floodplain management regulations that meet or exceed NFIP criteria. These criteria, including adoption of the FIS report and FIRM, and the modifications made by this LOMR, are the minimum requirements for continued NFIP participation and do not supersede more stringent State/Commonwealth or local requirements to which the regulations apply.

NFIP regulations Subparagraph 60.3(b)(7) requires communities to ensure that the flood-carrying capacity within the altered or relocated portion of any watercourse is maintained. This provision is incorporated into your community's existing floodplain management ordinances; therefore, responsibility for maintenance of the altered or relocated watercourse, including any related appurtenances such as bridges, culverts, and other drainage structures, rests with your community. We may request that your community submit a description and schedule of maintenance activities necessary to ensure this requirement.

COMMUNITY REMINDERS

We based this determination on the 1-percent-annual-chance discharges computed in the submitted hydrologic model. Future development of projects upstream could cause increased discharges, which could cause increased flood hazards. A comprehensive restudy of your community's flood hazards would consider the cumulative effects of development on discharges and could, therefore, indicate that greater flood hazards exist in this area.

Your community must regulate all proposed floodplain development and ensure that permits required by Federal and/or State/Commonwealth law have been obtained. State/Commonwealth or community officials, based on knowledge of local conditions and in the interest of safety, may set higher standards for construction or may limit development in floodplain areas. If your State/Commonwealth or community has adopted more restrictive or comprehensive floodplain management criteria, those criteria take precedence over the minimum NFIP requirements.

We will not print and distribute this LOMR to primary users, such as local insurance agents or mortgage lenders; instead, the community will serve as a repository for the new data. We encourage you to disseminate the information in this LOMR by preparing a news release for publication in your community's newspaper that describes the revision and explains how your community will provide the data and help interpret the NFIP maps. In that way, interested persons, such as property owners, insurance agents, and mortgage lenders, can benefit from the information.

This determination is based on the flood data presently available. The enclosed documents provide additional information regarding this determination. If you have any questions about this document, please contact the FEMA Map Assistance Center toll free at 1-877-336-2627 (1-877-FEMA MAP) or by letter addressed to the LOMR Depot, 3601 Eisenhower Avenue, Alexandria, VA 22304. Additional Information about the NFIP is available on our website at http://www.fema.gov/nfip.

Emily Hirsch, CFM, Project Engineer
Engineering Management Section
Mitigation Division

Federal Emergency Management Agency

Washington, D.C. 20472

LETTER OF MAP REVISION
DETERMINATION DOCUMENT (CONTINUED)

We have designated a Consultation Coordination Officer (CCO) to assist your community. The CCO will be the primary liaison between your community and FEMA. For information regarding your CCO, please contact:

Mr. Frank Pagano
Director, Federal Insurance and Mitigation Division
Federal Emergency Management Agency, Region VI
Federal Regional Center, Room 206
800 North Loop 288
Denton, TX 76209
(940) 898-5127

STATUS OF THE COMMUNITY NFIP MAPS

We will not physically revise and republish the FIRM for your community to reflect the modifications made by this LOMR at this time. When changes to the previously cited FIRM panel warrant physical revision and republication in the future, we will incorporate the modifications made by this LOMR at that time.

This determination is based on the flood data presently available. The enclosed documents provide additional information regarding this determination. If you have any questions about this document, please contact the FEMA Map Assistance Center toll free at 1-877-336-2627 (1-877-FEMA MAP) or by letter addressed to the LOMR Depot, 3601 Eisenhower Avenue, Alexandria, VA 22304. Additional Information about the NFIP is available on our website at http://www.fema.gov/nfip.

Emily Hirsch, CFM, Project Engineer
Engineering Management Section
Mitigation Division

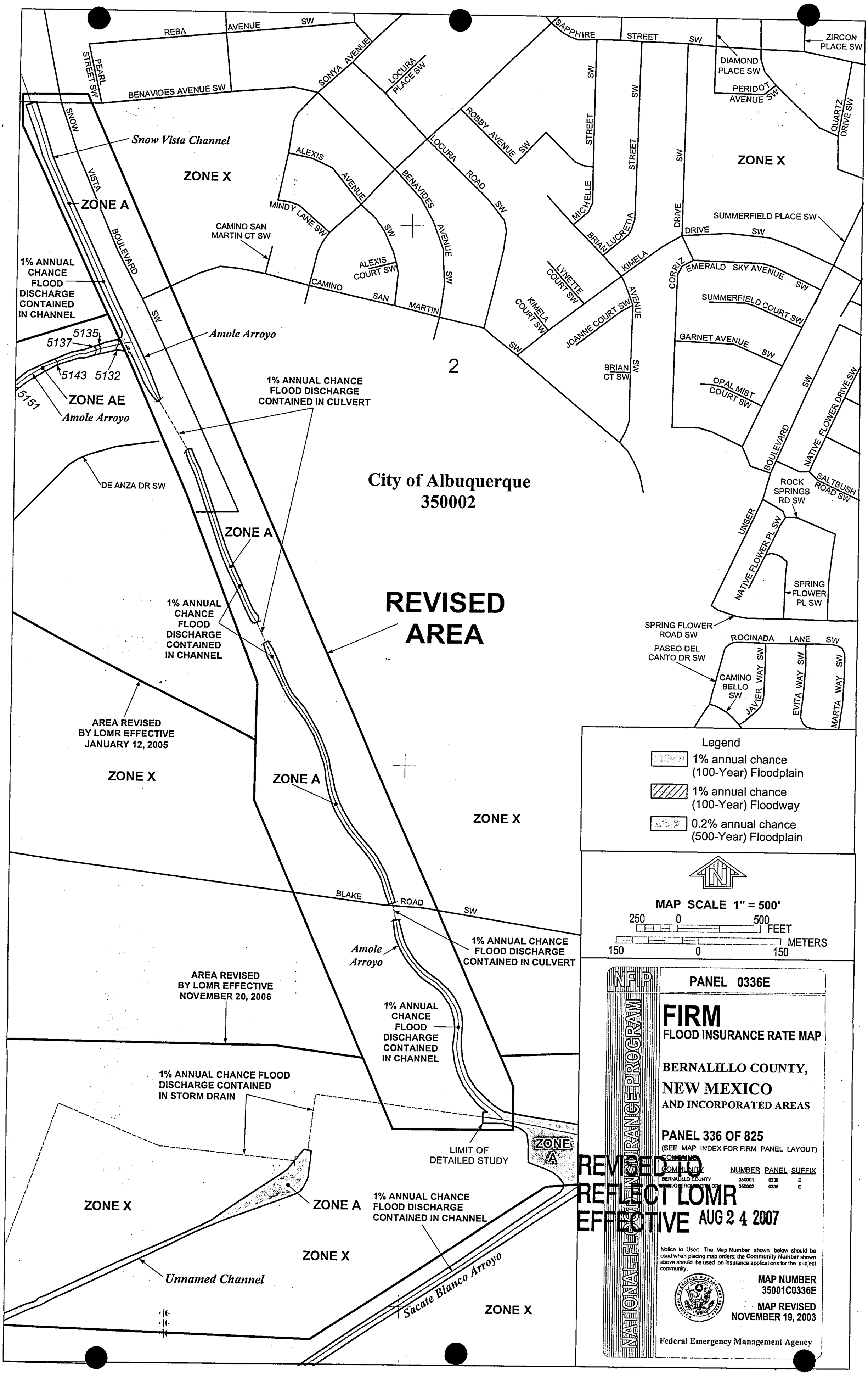
REBA AVENUE SW
PEARL STREET SW
BENAVIDES AVENUE SW
SONYA AVENUE
LOCURA PLACE SW
SAPPHIRE STREET SW
ZIRCON PLACE SW
DIAMOND PLACE SW
PERIDOT AVENUE SW
QUARTZ DRIVE SW
SNOW VISTA BOULEVARD SW
Snow Vista Channel
ZONE X
ZONE A
ALEXIS AVENUE SW
MINDY LANE SW
CAMINO SAN MARTIN CT SW
BENAVIDES AVENUE SW
LOCURA ROAD SW
ROBBY AVENUE SW
MICHELLE STREET SW
BRIAN LUCRETIA STREET SW
KIMELA DRIVE SW
SUMMERFIELD PLACE SW
ALEXIS COURT SW
CAMINO SAN MARTIN
LYNETTE COURT SW
KIMELA COURT SW
JOANNE COURT SW
CORRIZ AVENUE SW
EMERALD SKY AVENUE SW
SUMMERFIELD COURT SW
GARNET AVENUE SW
BRIAN CT SW
OPAL MIST COURT SW
1% ANNUAL CHANCE FLOOD DISCHARGE CONTAINED IN CHANNEL
5135
5137
5143
5132
5151
ZONE AE
Amole Arroyo
2
1% ANNUAL CHANCE FLOOD DISCHARGE CONTAINED IN CULVERT
DE ANZA DR SW
City of Albuquerque
350002
NATIVE FLOWER DRIVE SW
BOULEVARD SW
SALTBUSH ROAD SW
ROCK SPRINGS RD SW
UNSER
NATIVE FLOWER PL SW
SPRING FLOWER PL SW
SPRING FLOWER ROAD SW
REVISED AREA
1% ANNUAL CHANCE FLOOD DISCHARGE CONTAINED IN CHANNEL
ROCINADA LANE SW
PASEO DEL CANTO DR SW
CAMINO BELLO SW
JAVIER WAY SW
EVITA WAY SW
MARTA WAY SW
AREA REVISED BY LOMR EFFECTIVE JANUARY 12, 2005
ZONE X
ZONE A
ZONE X
Legend
1% annual chance (100-Year) Floodplain
1% annual chance (100-Year) Floodway
0.2% annual chance (500-Year) Floodplain
BLAKE ROAD SW
Amole Arroyo
1% ANNUAL CHANCE FLOOD DISCHARGE CONTAINED IN CULVERT
MAP SCALE 1" = 500'
250 0 500 FEET
150 0 150 METERS
AREA REVISED BY LOMR EFFECTIVE NOVEMBER 20, 2006
1% ANNUAL CHANCE FLOOD DISCHARGE CONTAINED IN CHANNEL
NFIP
PANEL 0336E
FIRM
FLOOD INSURANCE RATE MAP
BERNALILLO COUNTY, NEW MEXICO
AND INCORPORATED AREAS
PANEL 336 OF 825
(SEE MAP INDEX FOR FIRM PANEL LAYOUT)
CONTAINING:
COMMUNITY NUMBER PANEL SUFFIX
BERNALILLO COUNTY 350001 0336 E
ALBUQUERQUE, CITY OF 350002 0336 E
1% ANNUAL CHANCE FLOOD DISCHARGE CONTAINED IN STORM DRAIN
LIMIT OF DETAILED STUDY
ZONE A
REVISED TO REFLECT LOMR EFFECTIVE AUG 2 4 2007
ZONE X
ZONE A
1% ANNUAL CHANCE FLOOD DISCHARGE CONTAINED IN CHANNEL
ZONE X
Unnamed Channel
Sacate Blanco Arroyo
ZONE X
NATIONAL FLOOD INSURANCE PROGRAM
Notice to User: The Map Number shown below should be used when placing map orders; the Community Number shown above should be used on insurance applications for the subject community.
MAP NUMBER 35001C0336E
MAP REVISED NOVEMBER 19, 2003
Federal Emergency Management Agency

D. Mark Goodwin & Associates, P.A.
Consulting Engineers
P.O. BOX 90606, ALBUQUERQUE,NM 87199
(505) 828-2200 FAX 797-9539

204

July 6, 2007

Mr. Donald Gregor
Michael Baker Jr., Inc
4301 Dutch Ridge Road
Beaver, PA 15009

Re: LOMR Request for Amole Channel
(LOMR-Case # 07-06-1450P)

Dear Mr. Gregor:

Our office has received your comments letter, dated May 30, 2007, which asks for more information to be provided on submittal for the referenced project.

Your itemized comments have been addressed as follows:

- *We have added a MT-2 Form which is signed by the Community Official (City of Albuquerque). As this site is in City of Albuquerque Jurisdiction, it is not required for Community Official from Bernalillo County to sign on the MT-2 Form 1.*
- *We have included Form 2 and Form 3 in this submittal*
- *The flood plain is contained in the channel and is not affecting any individual properties or raising the BFEs, so we have not sent any legal notices to the owners.*
- *We have added the exhibit and as-built drawings both electronically and hard copy, that shows the corrected Floodway along with all Mapping Requirements.*
- *AMAFCA will have 1" of extra concrete lining to overcome spalling due to velocities. The design requires 6" lining but the as built is 7", additional 1" acts as a protective layer. (This facility is maintained by AMAFCA)*

Please contact our office if you have any questions.

Sincerely,

MARK GOODWIN & ASSOCIATES, P.A.

T. Paranthumar
Pavan K. Toleti
Project Engineer

PKT/la

Attachment

cc: Brad Bingham – COA

F:\1-Projects\2004\A04009 - Amole Channel\Building permit comments.doc

FEDERAL EMERGENCY MANAGEMENT AGENCY

OVERVIEW & CONCURRENCE FORM

O.M.B No. 3067-0148
Expires September 30, 2005

PAPERWORK BURDEN DISCLOSURE NOTICE

Public reporting burden for this form is estimated to average 1 hour per response. The burden estimate includes the time for reviewing instructions, searching existing data sources, gathering and maintaining the needed data, and completing, reviewing, and submitting the form. You are not required to respond to this collection of information unless a valid OMB control number appears in the upper right corner of this form. Send comments regarding the accuracy of the burden estimate and any suggestions for reducing this burden to: Information Collections Management, Federal Emergency Management Agency, 500 C Street, SW, Washington DC 20472, Paperwork Reduction Project (3067-0148). Submission of the form is required to obtain or retain benefits under the National Flood Insurance Program. **Please do not send your completed survey to the above address.**

A. REQUESTED RESPONSE FROM FEMA

This request is for a (check one):

☐ CLOMR: A letter from FEMA commenting on whether a proposed project, if built as proposed, would justify a map revision, or proposed hydrology changes (See 44 CFR Ch. 1, Parts 60, 65 & 72).

☒ LOMR: A letter from FEMA officially revising the current NFIP map to show the changes to floodplains, regulatory floodway or flood elevations. (See Parts 60 & 65 of the NFIP Regulations.)

B. OVERVIEW

1. The NFIP map panel(s) affected for all impacted communities is (are):

Community No.	Community Name	State	Map No.	Panel No.	Effective Date
Ex: 480301	City of Katy	TX	480301	0005D	02/08/83
480287	Harris County	TX	48201C	0220G	09/28/90
350002	City of Albuquerque	NM	35001C	0336E	11/19/03

2. Flooding Source: Amole Arroyo

3. Project Name/Identifier: Amole Channel Phase I

4. FEMA zone designations affected: A & AO (choices: A, AH, AO, A1-A30, A99, AE, AR, V, V1-V30, VE, B, C, D, X)

5. Basis for Request and Type of Revision:

a. The basis for this revision request is (check all that apply)

☒ Physical Change ☐ Improved Methodology/Data

☐ Regulatory Floodway Revision ☐ Other (Attach Description)

Note: A photograph and narrative description of the area of concern is not required, but is very helpful during review.

b. The area of revision encompasses the following types of flooding and structures (check all that apply)

Types of Flooding: ☒ Riverine ☐ Coastal ☒ Shallow Flooding (e.g., Zones AO and AH)

☐ Alluvial fan ☐ Lakes ☐ Other (Attach Description)

Structures: ☒ Channelization ☐ Levee/Floodwall ☒ Bridge/Culvert

☐ Dam ☐ Fill ☐ Other, Attach Description

C. REVIEW FEE

Has the review fee for the appropriate request category been included? ☒ Yes Fee amount: $4,000.00

☐ No, Attach Explanation

Please see the FEMA Web site at http://www.fema.gov/fhm/frm_fees.shtm for Fee Amounts and Exemptions.

D. SIGNATURE

All documents submitted in support of this request are correct to the best of my knowledge. I understand that any false statement may be punishable by fine or imprisonment under Title 18 of the United States Code, Section 1001.

Name: James D. Hughes, P.E.	Company: Mark Goodwin & Associates, P.A.	
Mailing Address: PO Box 90606 Albuquerque, NM 87199	Daytime Telephone No.: (505) 828-2200	Fax No.: (505) 797-9539
	E-Mail Address: doug@goodwinengineers.com	
Signature of Requester (required): James D. Hughes		Date: 4-13-07

As the community official responsible for floodplain management, I hereby acknowledge that we have received and reviewed this Letter of Map Revision (LOMR) or conditional LOMR request. Based upon the community's review, we find the completed or proposed project meets or is designed to meet all of the community floodplain management requirements, including the requirement that no fill be placed in the regulatory floodway, and that all necessary Federal, State, and local permits have been, or in the case of a conditional LOMR, will be obtained. In addition, we have determined that the land and any existing or proposed structures to be removed from the SFHA are or will be reasonably safe from flooding as defined in 44CFR 65.2(c), and that we have available upon request by FEMA, all analyses and documentation used to make this determination.

Community Official's Name and Title: Brad Bingham, Flood Plain Administrator		Telephone No.: (505) 924-3986
Community Name: City of Albuquerque, NM	Community Official's Signature (required): X Bradley J. Bingham	Date: 7/6/07

CERTIFICATION BY REGISTERED PROFESSIONAL ENGINEER AND/OR LAND SURVEYOR

This certification is to be signed and sealed by a licensed land surveyor, registered professional engineer, or architect authorized by law to certify elevation information. All documents submitted in support of this request are correct to the best of my knowledge. I understand that any false statement may be punishable by fine or imprisonment under Title 18 of the United States Code, Section 1001.

Certifier's Name: James D. Hughes, P.E.	License No.: 11674	Expiration Date: 12/31/08
Company Name: Mark Goodwin & Associates, PA	Telephone No.: (505) 828-2200	Fax No.: (505) 797-9539
Signature: James D. Hughes		Date: 4-13-07

Ensure the forms that are appropriate to your revision request are included in your submittal.

Form Name and (Number)	Required if ...
☐ Riverine Hydrology and Hydraulics Form (Form 2)	New or revised discharges or water-surface elevations
☐ Riverine Structures Form (Form 3)	Channel is modified, addition/revision of bridge/culverts, addition/revision of levee/floodwall, addition/revision of dam
☐ Coastal Analysis Form (Form 4)	New or revised coastal elevations
☐ Coastal Structures Form (Form 5)	Addition/revision of coastal structure
☐ Alluvial Fan Flooding Form (Form 6)	Flood control measures on alluvial fans

JAMES D. HUGHES
11874
NEW MEXICO
REGISTERED PROFESSIONAL ENGINEER
Seal (Optional)

FEDERAL EMERGENCY MANAGEMENT AGENCY

RIVERINE HYDROLOGY & HYDRAULICS FORM

O.M.B No. 3067-0148
Expires September 30, 2005

PAPERWORK REDUCTION ACT

Public reporting burden for this form is estimated to average 3 hours per response. The burden estimate includes the time for reviewing instructions, searching existing data sources, gathering and maintaining the needed data, and completing, reviewing, and submitting the form. You are not required to respond to this collection of information unless a valid OMB control number appears in the upper right corner of this form. Send comments regarding the accuracy of the burden estimate and any suggestions for reducing this burden to: Information Collections Management, Federal Emergency Management Agency, 500 C Street, SW, Washington DC 20472, Paperwork Reduction Project (3067-0148). Submission of the form is required to obtain or retain benefits under the National Flood Insurance Program. **Please do not send your completed survey to the above address.**

Flooding Source: Amole Arroyo
Note: Fill out one form for each flooding source studied

A. HYDROLOGY

1. Reason for New Hydrologic Analysis (check all that apply)

☐ Not revised (skip to section 2) ☐ No existing analysis ☐ Improved data
☐ Alternative methodology ☐ Proposed Conditions (CLOMR) ☒ Changed physical condition of watershed

2. Comparison of Representative 1%-Annual-Chance Discharges

Location	Drainage Area (Sq. Mi.)	FIS (cfs)	Revised (cfs)
Just E of Diversion Dike	0.96 fis	477	3520.65

3. Methodology for New Hydrologic Analysis (check all that apply)

☐ Statistical Analysis of Gage Records ☒ Precipitation/Runoff Model [TR-20, HEC-1, HEC-HMS etc.]
☐ Regional Regression Equations ☐ Other (please attach description)

Please enclose all relevant models in digital format, maps, computations (including computation of parameters) and documentation to support the new analysis. The document, "Numerical Models Accepted by FEMA for NFIP Usage" lists the models accepted by FEMA. This document can be found at: http://www.fema.gov/fhm/en_modl.shtm.

4. Review/Approval of Analysis

If your community requires a regional, state, or federal agency to review the hydrologic analysis, please attach evidence of approval/review.

5. Impacts of Sediment Transport on Hydrology

Was sediment transport considered? ☐ Yes ☒ No If yes, then fill out Section F (Sediment Transport) of Form 3. If No, then attach your explanation for why sediment transport was not considered.

B. HYDRAULICS

1. Reach to be Revised

	Description	Cross Section	Water-Surface Elevations (ft.) Effective	Proposed/Revised
Downstream Limit	Amole Detention Area	10+22	Approximate	
Upstream Limit	Snow Vista above confluence w/ Amole	79+00	Approximate	

2. Hydraulic Method Used

Hydraulic Analysis HEC-RAS [HEC-2 , HEC-RAS, Other (Attach description)]

B. HYDRAULICS (CONTINUED)

3. Pre-Submittal Review of Hydraulic Models

FEMA has developed two review programs, CHECK-2 and CHECK-RAS, to aid in the review of HEC-2 and HEC-RAS hydraulic models, respectively. These review programs verify that the hydraulic estimates and assumptions in the model data are in accordance with NFIP requirements, and that the data are comparable with the assumptions and limitations of HEC-2/HEC-RAS. CHECK-2 and CHECK-RAS identify areas of potential error or concern. These tools do not replace engineering judgment. CHECK-2 and CHECK-RAS can be downloaded from http://www.fema.gov/fhm/frm_soft.shtm. We recommend that you review your HEC-2 and HEC-RAS models with CHECK-2 and CHECK-RAS. If you disagree with a message, please attach an explanation of why the message is not valid in this case. Review of your submittal and resolution of valid modeling discrepancies will result in reduced review time.

HEC-2/HEC-RAS models reviewed with CHECK-2/CHECK-RAS? ☐ Yes ☒ No

4. Models Submitted

Duplicate Effective Model*	Natural File Name: N/A	Floodway File Name: N/A
Corrected Effective Model*	Natural File Name: N/A	Floodway File Name: N/A
Existing or Pre-Project Conditions Model	Natural File Name: N/A	Floodway File Name: N/A
Revised or Post-Project Conditions Model	Natural File Name: Amole Project	Floodway File Name: N/A
Other - (attach description)	Natural File Name: N/A	Floodway File Name: N/A

*Not required for revisions to approximate 1%-annual-chance floodplains (Zone A) – for details, refer to the corresponding section of the instructions.

The document "Numerical Models Accepted by FEMA for NFIP Usage" lists the models accepted by FEMA. This document can be found at: http://www.fema.gov/fhm/en_modl.shtm.

C. MAPPING REQUIREMENTS

A **certified topographic map** must be submitted showing the following information (where applicable): the boundaries of the effective, existing, and proposed conditions 1%-annual-chance floodplain (for approximate Zone A revisions) or the boundaries of the 1%- and 0.2%-annual-chance floodplains and regulatory floodway (for detailed Zone AE, AO, and AH revisions); location and alignment of all cross sections with stationing control indicated; stream, road, and other alignments (e.g., dams, levees, etc.); current community easements and boundaries; boundaries of the requester's property; certification of a registered professional engineer registered in the subject State; location and description of reference marks; and the referenced vertical datum (NGVD, NAVD, etc.).

Note that the boundaries of the existing or proposed conditions floodplains and regulatory floodway to be shown on the revised FIRM and/or FBFM must tie-in with the effective floodplain and regulatory floodway boundaries. Please attach **a copy of the effective FIRM and/or FBFM,** annotated to show the boundaries of the revised 1%- and 0.2%-annual-chance floodplains and regulatory floodway that tie-in with the boundaries of the effective 1%- and 0.2%-annual-chance floodplain and regulatory floodway at the upstream and downstream limits of the area of revision.

D. COMMON REGULATORY REQUIREMENTS

1. For CLOMR requests, do Base Flood Elevations (BFEs) increase? ☐ Yes ☒ No

For CLOMR requests, if either of the following is true, please submit evidence of compliance with Section 65.12 of the NFIP regulations:
- The proposed project encroaches upon a regulatory floodway and would result in increases above 0.00 foot.
- The proposed project encroaches upon a SFHA with BFEs established and would result in increases above 1.00 foot.

2. Does the request involve the placement or proposed placement of fill? ☐ Yes ☒ No

If Yes, the community must be able to certify that the area to be removed from the special flood hazard area, to include any structures or proposed structures, meets all of the standards of the local floodplain ordinances, and is reasonably safe from flooding in accordance with the NFIP regulations set forth at 44 CFR 60.3(a)(3), 65.5(a)(4), and 65.6(a)(14). Please see the MT-2 instructions for more information.

3. For LOMR requests, is the regulatory floodway being revised? ☐ Yes ☒ No

If Yes, attach evidence of regulatory floodway revision notification. As per Paragraph 65.7(b)(1) of the NFIP Regulations, notification is required for requests involving revisions to the regulatory floodway. (Not required for revisions to approximate 1%-annual-chance floodplains [studied Zone A designation] unless a regulatory floodway is being added. Elements and examples of regulatory floodway revision notification can be found in the MT-2 Form 2 Instructions.)

4. For LOMR requests, does this request require property owner notification and acceptance of BFE increases? ☐ Yes ☒ No

If Yes, please attach proof of property owner notification and acceptance (if available). Elements of and examples of property owner notification can be found in the MT-2 Form 2 Instructions.

FEDERAL EMERGENCY MANAGEMENT AGENCY

RIVERINE STRUCTURES FORM

O.M.B. No. 3067-0148
Expires September 30, 2005

PAPERWORK REDUCTION ACT

Public reporting burden for this form is estimated to average 7 hours per response. The burden estimate includes the time for reviewing instructions, searching existing data sources, gathering and maintaining the needed data, and completing, reviewing, and submitting the form. You are not required to respond to this collection of information unless a valid OMB control number appears in the upper right corner of this form. Send comments regarding the accuracy of the burden estimate and any suggestions for reducing this burden to: Information Collections Management, Federal Emergency Management Agency, 500 C Street, SW, Washington DC 20472, Paperwork Reduction Project (3067-0148). Submission of the form is required to obtain or retain benefits under the National Flood Insurance Program. **Please do not send your completed survey to the above address.**

Flooding Source: Amole Arroyo
Note: Fill out one form for each flooding source studied

A. GENERAL

Complete the appropriate section(s) for each Structure listed below:

Channelization ..... complete Section B
Bridge/Culvert ..... complete Section C
Dam ..... complete Section D
Levee/Floodwall ..... complete Section E
Sediment Transport ..... complete Section F (if required)

Description Of Structure

1. **Name of Structure: Amole Channel Phases I, II & III (Proposed)**

   Type (check one): ☒ Channelization ☐ Bridge/Culvert ☐ Levee/Floodwall ☐ Dam

   Location of Structure: In AMAFCA Public Drainage Easements and Right of Ways

   Downstream Limit/Cross Section: Amole Detention Area 10.22

   Upstream Limit/Cross Section: Confluence of Amole and Snow Vista Channels / 79.00

2. **Name of Structure: Blake Road Bridge (Proposed)**

   Type (check one): ☐ Channelization ☒ Bridge/Culvert ☐ Levee/Floodwall ☐ Dam

   Location of Structure: Blake Road

   Downstream Limit/Cross Section: End of Box culvert / 41.11

   Upstream Limit/Cross Section: End of Box culvert / 41.86

3. **Name of Structure: 98th Street Bridge**

   Type (check one) ☐ Channelization ☒ Bridge/Culvert ☐ Levee/Floodwall ☐ Dam

   Location of Structure: Intersection of 98th Street & DeAnza Road

   Downstream Limit/Cross Section: End of Box culvert / 72.25

   Upstream Limit/Cross Section: End of Box culvert / 75.74

NOTE: For more structures, attach additional pages as needed.

B. CHANNELIZATION

Flooding Source: Amole Arroyo

Name of Structure: Amole Channel Phase I

1. Accessory Structures

The channelization includes (check one):

- ☐ Levees [Attach Section E (Levee/Floodwall)]
- ☒ Superelevated sections
- ☐ Debris basin/detention basin
- ☐ Other (Describe):
- ☐ Drop structures
- ☒ Transitions in cross sectional geometry
- ☐ Energy dissipator

2. Drawing Checklist

Attach the plans of the channelization certified by a registered professional engineer, as described in the instructions.

3. Hydraulic Considerations

The channel was designed to carry 3032 (cfs) and/or the 100-year flood.

The design elevation in the channel is based on (check one):

☐ Subcritical flow ☐ Critical flow ☒ Supercritical flow ☐ Energy grade line

If there is the potential for a hydraulic jump at the following locations, check all that apply and attach an explanation of how the hydraulic jump is controlled without affecting the stability of the channel.

☐ Inlet to channel ☐ Outlet of channel ☐ At Drop Structures ☐ At Transitions
☐ Other locations (specify):

4. Sediment Transport Considerations

Was sediment transport considered? ☐ Yes ☒ No If Yes, then fill out Section F (Sediment Transport).
If No, then attach your explanation for why sediment transport was not considered.

C. BRIDGE/CULVERT

Flooding Source: Amole Arroyo

Name of Structure: Blake Road Bridge

1. This revision reflects (check one):

- ☒ New bridge/culvert not modeled in the FIS
- ☐ Modified bridge/culvert previously modeled in the FIS
- ☐ New analysis of bridge/culvert previously modeled in the FIS

2. Hydraulic model used to analyze the structure (e.g., HEC-2 with special bridge routine, WSPRO, HY8): HEC - RAS
If different than hydraulic analysis for the flooding source, justify why the hydraulic analysis used for the flooding source could not analyze the structures. Attach justification.

3. Attach plans of the structures certified by a registered professional engineer. The plan detail and information should include the following (check the information that has been provided):

- ☒ Dimensions (height, width, span, radius, length)
- ☒ Shape (culverts only)
- ☒ Material
- ☐ Beveling or Rounding
- ☒ Wing Wall Angle
- ☒ Skew Angle
- ☒ Distances Between Cross Sections
- ☒ Erosion Protection
- ☒ Low Chord Elevations – Upstream and Downstream
- ☒ Top of Road Elevations – Upstream and Downstream
- ☒ Structure Invert Elevations – Upstream and Downstream
- ☒ Stream Invert Elevations – Upstream and Downstream
- ☒ Cross-Section Locations

4. Sediment Transport Considerations

Was sediment transport considered? ☐ Yes ☒ No If yes, then fill out Section F (Sediment Transport).
If No, then attach your explanation for why sediment transport was not considered.

D. DAM

Flooding Source:

Name of Structure:

1. This request is for (check one): ☐ Existing dam ☐ New dam ☐ Modification of existing dam

2. The dam was designed by (check one): ☐ Federal agency ☐ State agency ☐ Local government agency

   ☐ Private organization Name of the agency or organization:

3. Does the project involve revised hydrology? ☐ Yes ☐ No

   If Yes, complete the Riverine Hydrology & Hydraulics Form (Form 2).

4. Does the submittal include debris/sediment yield analysis? ☐ Yes ☐ No

   If yes, then fill out Section F (Sediment Transport).
   If No, then attach your explanation for why debris/sediment analysis was not considered.

5. Does the Base Flood Elevation behind the dam or downstream of the dam change?

   ☐ Yes ☐ No If Yes, complete the Riverine Hydrology & Hydraulics Form (Form 2) and complete the table below.

	Stillwater Elevation Behind the Dam	
FREQUENCY (% annual chance)	FIS	REVISED
10-year (10%)		
50-year (2%)		
100-year (1%)		
500-year (0.2%)		
Normal Pool Elevation		

6. Please attach a copy of the formal Operation and Maintenance Plan

N.A

E. LEVEE/FLOODWALL

1. System Elements

a. This Levee/Floodwall analysis is based on (check one):

☐ upgrading of an existing levee/floodwall system
☐ a newly constructed levee/floodwall system
☐ reanalysis of an existing levee/floodwall system

b. Levee elements and locations are (check one):

☐ earthen embankment, dike, berm, etc.	Station	to
☐ structural floodwall	Station	to
☐ Other (describe):	Station	to

c. Structural Type (check one):

☐ monolithic cast-in place reinforced concrete
☐ reinforced concrete masonry block
☐ sheet piling
☐ Other (describe):

d. Has this levee/floodwall system been certified by a Federal agency to provide protection from the base flood?

☐ Yes ☐ No

If Yes, by which agency?

e. Attach certified drawings containing the following information (indicate drawing sheet numbers):

1. Plan of the levee embankment and floodwall structures. Sheet Numbers:
2. A profile of the levee/floodwall system showing the Base Flood Elevation (BFE), levee and/or wall crest and foundation, and closure locations for the total levee system. Sheet Numbers:
3. A profile of the BFE, closure opening outlet and inlet invert elevations, type and size of opening, and kind of closure. Sheet Numbers:
4. A layout detail for the embankment protection measures. Sheet Numbers:
5. Location, layout, and size and shape of the levee embankment features, foundation treatment, floodwall structure, closure structures, and pump stations. Sheet Numbers:

N.A

2. Freeboard

a. The minimum freeboard provided above the BFE is:

Riverine

3.0 feet or more at the downstream end and throughout	☐ Yes	☐ No
3.5 feet or more at the upstream end	☐ Yes	☐ No
4.0 feet within 100 feet upstream of all structures and/or constrictions	☐ Yes	☐ No

Coastal

1.0 foot above the height of the one percent wave associated with the 1%-annual-chance stillwater surge elevation or maximum wave runup (whichever is greater).	☐ Yes	☐ No
2.0 feet above the 1%-annual-chance stillwater surge elevation	☐ Yes	☐ No

2. Freeboard (continued)

Please note, occasionally exceptions are made to the minimum freeboard requirement. If an exception is requested, attach documentation addressing Paragraph 65.10(b)(1)(ii) of the NFIP Regulations.

If No is answered to any of the above, please attach an explanation.

b. Is there an indication from historical records that ice-jamming can affect the BFE? ☐ Yes ☐ No

If Yes, provide ice-jam analysis profile and evidence that the minimum freeboard discussed above still exists.

3. Closures

a. Openings through the levee system (check one): ☐ exists ☐ does not exist

If opening exists, list all closures:

Channel Station	Left or Right Bank	Opening Type	Highest Elevation for Opening Invert	Type of Closure Device

(Extend table on an added sheet as needed and reference)

Note: Geotechnical and geologic data

In addition to the required detailed analysis reports, data obtained during field and laboratory investigations and used in the design analysis for the following system features should be submitted in a tabulated summary form. (Reference U.S. Army Corps of Engineers [USACE] EM-1110-2-1906 Form 2086.)

4. Embankment Protection

a. The maximum levee slope landside is:

b. The maximum levee slope floodside is:

N.A

c. The range of velocities along the levee during the base flood is: (min.) to (max.)

d. Embankment material is protected by (describe what kind):

e. Riprap Design Parameters (check one): ☐ Velocity ☐ Tractive stress
Attach references

Reach	Sideslope	Flow Depth	Velocity	Curve or Straight	Stone Riprap			Depth of Toedown
					D_{100}	D_{50}	Thickness	
Sta to								
Sta to								
Sta to								
Sta to								
Sta to								
Sta to								

(Extend table on an added sheet as needed and reference each entry)

4. Embankment Protection (continued)

f. Is a bedding/filter analysis and design attached? ☐ Yes ☐ No

g. Describe the analysis used for other kinds of protection used (include copies of the design analysis):

Attach engineering analysis to support construction plans.

5. Embankment And Foundation Stability

a. Identify locations and describe the basis for selection of critical location for analysis:

☐ Overall height: Sta. ; height ft.

☐ Limiting foundation soil strength:

Sta. , depth to

strength ϕ = degrees, c = psf

slope: SS = (h) to (v)

N.A

(Repeat as needed on an added sheet for additional locations)

b. Specify the embankment stability analysis methodology used (e.g., circular arc, sliding block, infinite slope, etc.):

c. Summary of stability analysis results:

Case	Loading Conditions	Critical Safety Factor	Criteria (Min.)
I	End of construction		1.3
II	Sudden drawdown		1.0
III	Critical flood stage		1.4
IV	Steady seepage at flood stage		1.4
VI	Earthquake (Case I)		1.0

(Reference: USACE EM-1110-2-1913 Table 6-1)

d. Was a seepage analysis for the embankment performed? ☐ Yes ☐ No

If Yes, describe methodology used:

e. Was a seepage analysis for the foundation performed? ☐ Yes ☐ No

f. Were uplift pressures at the embankment landside toe checked? ☐ Yes ☐ No

g. Were seepage exit gradients checked for piping potential? ☐ Yes ☐ No

h. The duration of the base flood hydrograph against the embankment is hours.

Attach engineering analysis to support construction plans.

6. Floodwall And Foundation Stability

a. Describe analysis submittal based on Code (check one):

☐ UBC (1988) or ☐ Other (specify):

b. Stability analysis submitted provides for:

☐ Overturning ☐ Sliding If not, explain:

c. Loading included in the analyses were:

☐ Lateral earth @ P_A = psf; P_p = psf

☐ Surcharge-Slope @ , ☐ surface psf

☐ Wind @ P_w = psf

☐ Seepage (Uplift); ☐ Earthquake @ P_{eq} = %g

N.A

☐ 1%-annual-chance significant wave height: ft.

☐ 1%-annual-chance significant wave period: sec.

d. Summary of Stability Analysis Results: Factors of Safety.

Itemize for each range in site layout dimension and loading condition limitation for each respective reach.

Loading Condition	Criteria (Min)		Sta	To	Sta	To
	Overturn	Sliding	Overturn	Sliding	Overturn	Sliding
Dead & Wind	1.5	1.5				
Dead & Soil	1.5	1.5				
Dead, Soil, Flood, & Impact	1.5	1.5				
Dead, Soil, & Seismic	1.3	1.3				

(Ref: FEMA 114 Sept 1986; USACE EM 1110-2-2502)

(Note: Extend table on an added sheet as needed and reference)

e. Foundation bearing strength for each soil type:

Bearing Pressure	Sustained Load (psf)	Short Term Load (psf)
Computed design maximum		
Maximum allowable		

f. Foundation scour protection ☐ is, ☐ is not provided. If provided, attach explanation and supporting documentation:

Attach engineering analysis to support construction plans.

7. Settlement

a. Has anticipated potential settlement been determined and incorporated into the specified construction elevations to maintain the established freeboard margin? ☐ Yes ☐ No

b. The computed range of settlement is ft. to ft.

c. Settlement of the levee crest is determined to be primarily from :

☐ Foundation consolidation
☐ Embankment compression
☐ Other (Describe):

d. Differential settlement of floodwalls ☐ has ☐ has not been accommodated in the structural design and construction.

Attach engineering analysis to support construction plans.

8. Interior Drainage

a. Specify size of each interior watershed:

Draining to pressure conduit: acres
Draining to ponding area: acres

N.A

b. Relationships Established

Ponding elevation vs. storage	☐ Yes	☐ No
Ponding elevation vs. gravity flow	☐ Yes	☐ No
Differential head vs. gravity flow	☐ Yes	☐ No

c. The river flow duration curve is enclosed: ☐ Yes ☐ No

d. Specify the discharge capacity of the head pressure conduit: cfs

e. Which flooding conditions were analyzed?

• Gravity flow (Interior Watershed)	☐ Yes	☐ No
• Common storm (River Watershed)	☐ Yes	☐ No
• Historical ponding probability	☐ Yes	☐ No
• Coastal wave overtopping	☐ Yes	☐ No

If No for any of the above, attach explanation.

f. Interior drainage has been analyzed based on joint probability of interior and exterior flooding and the capacities of pumping and outlet facilities to provide the established level of flood protection. ☐ Yes ☐ No

If No, attach explanation.

g. The rate of seepage through the levee system for the base flood is cfs

h. The length of levee system used to drive this seepage rate in item g: ft.

8. Interior Drainage (continued)

i. Will pumping plants be used for interior drainage? ☐ Yes ☐ No

If Yes, include the number of pumping plants:
For each pumping plant, list:

	Plant #1	Plant #2
The number of pumps		
The ponding storage capacity		
The maximum pumping rate		
The maximum pumping head		
The pumping starting elevation		
The pumping stopping elevation		
Is the discharge facility protected?		
Is there a flood warning plan?		
How much time is available between warning and flooding?		

Will the operation be automatic? ☐ Yes ☐ No

If the pumps are electric, are there backup power sources? ☐ Yes ☐ No

(Reference: USACE EM-1110-2-3101, 3102, 3103, 3104, and 3105)

Include a copy of supporting documentation of data and analysis. Provide a map showing the flooded area and maximum ponding elevations for all interior watersheds that result in flooding.

9. Other Design Criteria

N.A

a. The following items have been addressed as stated:

Liquefaction ☐ is ☐ is not a problem
Hydrocompaction ☐ is ☐ is not a problem
Heave differential movement due to soils of high shrink/swell ☐ is ☐ is not a problem

b. For each of these problems, state the basic facts and corrective action taken:

Attach supporting documentation

c. If the levee/floodwall is new or enlarged, will the structure adversely impact flood levels and/or flow velocities floodside of the structure?
☐ Yes ☐ No

Attach supporting documentation

d. Sediment Transport Considerations:

Was sediment transport considered? ☐ Yes ☐ No If Yes, then fill out Section F (Sediment Transport).
If No, then attach your explanation for why sediment transport was not considered.

E. LEVEE/FLOODWALL (CONTINUED)

10. Operational Plan And Criteria

a. Are the planned/installed works in full compliance with Part 65.10 of the NFIP Regulations? ☐ Yes ☐ No

b. Does the operation plan incorporate all the provisions for closure devices as required in Paragraph 65.10(c)(1) of the NFIP regulations?
☐ Yes ☐ No

c. Does the operation plan incorporate all the provisions for interior drainage as required in Paragraph 65.10(c)(2) of the NFIP regulations?
☐ Yes ☐ No

If the answer is No to any of the above, please attach supporting documentation.

11. Maintenance Plan

a. Are the planned/installed works in full compliance with Part 65.10 of the NFIP Regulations? ☐ Yes ☐ No
If No, please attach supporting documentation.

12. Operations and Maintenance Plan

Please attach a copy of the formal Operations and Maintenance Plan for the levee/floodwall.

F. SEDIMENT TRANSPORT

Flooding Source:

Name of Structure:

If there is any indication from historical records that sediment transport (including scour and deposition) can affect the Base Flood Elevation (BFE); and/or based on the stream morphology, vegetative cover, development of the watershed and bank conditions, there is a potential for debris and sediment transport (including scour and deposition) to affect the BFEs, then provide the following information along with the supporting documentation:

Sediment load associated with the base flood discharge: Volume acre-feet N.A

Debris load associated with the base flood discharge: Volume acre-feet

Sediment transport rate (percent concentration by volume)

Method used to estimate sediment transport:

Most sediment transport formulas are intended for a range of hydraulic conditions and sediment sizes; attach a detailed explanation for using the selected method.

Method used to estimate scour and/or deposition:

Method used to revise hydraulic or hydrologic analysis (model) to account for sediment transport:
Please note that bulked flows are used to evaluate the performance of a structure during the base flood; however, FEMA does not map BFEs based on bulked flows.

If a sediment analysis has not been performed, an explanation as to why sediment transport (including scour and deposition) will not affect the BFEs or structures must be provided.

NATIONAL FLOOD INSURANCE PROGRAM

FEMA NATIONAL SERVICE PROVIDER

May 30, 2007

James D. Hughes, P.E.
Mark Goodwin & Associates
PO Box 90606
Albuquerque, NM 87199

IN REPLY REFER TO:
Case No.: 07-06-1450P
Community: City of Albuquerque, NM
Community No.: 350002

316-AD

Dear Mr. Hughs:

This responds to your request dated April 13, 2007 that the Department of Homeland Security's Federal Emergency Management Agency (FEMA) issue a revision to the Flood Insurance Rate Map (FIRM) for Bernalillo County, New Mexico and Incorporated Areas. Pertinent information about the request is listed below.

Identifier:	Amole Channel, Phase 1
Flooding Source:	Amole Arroyo: Snow Vista Channel
FIRM Panel(s) Affected:	35001C0336 E

The data required to complete our review, which must be submitted within 90 days of the date of this letter, are listed on the enclosed summary.

If we do not receive the required data within 90 days, we will suspend our processing of your request. Any data submitted after 90 days will be treated as an original submittal and will be subject to all submittal/payment procedures, including the flat review and processing fee for requests of this type established by the current fee schedule. A copy of the notice summarizing the current fee schedule, which was published in the *Federal Register,* is enclosed for your information.

FEMA receives a very large volume of requests and cannot maintain inactive requests for an indefinite period of time. Therefore, we are unable to grant extensions for the submission of required data/fee for revision requests. If a requester is informed by letter that additional data are required to complete our review of a request, the data/fee **must** be submitted within 90 days of the date of the letter. Any fees already paid will be forfeited for any request for which the requested data are not received within 90 days.

If you have general questions about your request, FEMA policy, or the National Flood Insurance Program, please call the FEMA Map Assistance Center, toll free, at 1-877-FEMA MAP (1-877-336-2627).

If you have specific questions concerning your request, please call the Revisions Coordinator for your State, Ms. Shilpa Mulik, CFM, who may be reached at (703) 960-8800, ext. 5297.

Sincerely,

Syed Qayum

Syed Qayum, CFM
National LOMR Technical Manager
Michael Baker Jr., Inc.

Enclosures

cc: Mr. Brad Bingham
Hydrology Department
City of Albuquerque

NATIONAL FLOOD INSURANCE PROGRAM

FEMA NATIONAL SERVICE PROVIDER

Summary of Additional Data Required to Support a
Letter of Map Revision

Case No.: 07-06-1450P

Requester: James D. Hughes, P.E.

Community: Albuquerque, NM

Community No.: 350002

The issues listed below must be addressed before we can continue the review of your request.

1. The MT-2 Form 1 submitted lacked the signature of the Community Official. Please provide community acknowledgment in the form of a letter stating that Bernalillo County has reviewed the revision request and understands the effects of the revision on flooding conditions in the community, or MT-2 Form 1, entitled "Overview and Concurrence Form" (enclosed) signed by a community official from Bernalillo County.

2. The following forms, enclosed for your reference, which were omitted from your previous submittal, must be provided:

   Form 2, entitled "Riverine Hydrology & Hydraulics Form"
   Form 3, entitled "Riverine Structures Form"

3. Please provide documentation of the individual legal notices that were sent to property owners who are affected by the shifting of the flood boundaries having a 1-percent chance of being equaled or exceeded in any given year. Example letters from the MT-2 instructions, Figures 3 through 8, for this notification are enclosed for your reference.

4. Please include a P.E. certified topographic map stamped as-built of suitable scale, contour interval, and planimetric showing the applicable items indicated along with the items to meet the requirements of section C, "Mapping Requirements", of the MT-2 Form 2 (copy enclosed).

   (a) Boundary delineations of the corrected effective floodway and the flood having a 1-percent and 0.2-percent chance of being equaled or exceeded in any given year
   (b) Boundary delineation of the currently effective floodway
   (c) Topographic contour information used for the boundary delineation of the base flood
   (d) Locations and alignment of cross sections
   (e) Flow line used in the hydraulic model
   (f) Proposed zone labels
   (g) Scale and north arrow

5. Please provide additional data supporting the additional changes to the BFEs along the Amole Arroyo on the annotated FIRM.

6. Our review revealed velocity values within the channel that can cause spalling of the concrete channel lining. Please include a detailed explanation for these high velocity values or make the appropriate changes

Please send the required data directly to us at the address shown below. For identification purposes, please include the case number referenced above on all correspondence.

ATTN: Donald Gregor (724-495-4264)
Michael Baker Jr., Inc.
4301 Dutch Ridge Road
Beaver, PA 15009

CITY OF ALBUQUERQUE

April 18, 2007

FEMA Depot
3601 Eisenhower Ave
Alexandria VA, MD 22304

Re: Request for a Letter of Map Revision for the Amole Channel, Phase 1, City of Albuquerque, New Mexico, Community No. 350002, FIRM Panel 35001C0336E

Dear FEMA review engineer,

The purpose of this submittal is to convey the documents in order to request a Letter of Map Revision for the Amole Channel, Phase 1. The CLOMR (FEMA case no. 05-06-0869R) was approved 12/20/06 and this request is the follow-up to that request.

Enclosed with this letter are the Application and as-built and certified construction drawings for requesting revisions to the National Flood Insurance Program map. The fee of $4000.00 (check # 8147) is included as well.

As the Community official, I have reviewed the application and endorse this revision request. Our Community would greatly appreciate your prompt response and approval.

If you have any questions, you can contact me at (505) 924-3986.

Sincerely,

Bradley L. Bingham

Bradley L. Bingham, PE, CFM
City Floodplain Administrator

C: Doug Hughes, P.E., Mark Goodwin & Assoc.
Jack Quarles, FEMA Region VI
Lynn Mazur, AMAFCA
file

P.O. Box 1293

Albuquerque

New Mexico 87103

www.cabq.gov

CURB, INC.
5160 SAN FRANCISCO NE - PH. 881-9190
ALBUQUERQUE, NM 87109

95-660/1070
2025113388

8147

DATE 4-16-07

PAY TO THE ORDER OF N.F.I.P. $ 4,000.00

Four thousand + no/100 DOLLARS

Security Features Included. Details on Back.

BANK OF ALBUQUERQUE N.A.
Albuquerque, New Mexico
www.bankofalbuquerque.com

MEMO COMR - Amole

Charles A Vaughn

MP

⑆1070066061⑆ 2025113388⑈ 8147

© DELUXE WALLET OR DUPLICATE SAFETY PAPER

2007
[redacted] LETTER OF MAP REVISION (LOMR) REQUEST
for
AMOLE CHANNEL, PAHSE I
From Gibson Blvd Dam to Big Bend in Amole Channel

Prepared for

Curb, Inc.
5160 San Fransisco NE
Albuquerque, NM 87109
(505) 880-9190

Prepared by

Mark Goodwin & Associates, PA
P.O. Box 90606
Albuquerque, NM 87199
(505) 828-2200

JAMES D. HUGHES
11674
NEW MEXICO
REGISTERED PROFESSIONAL ENGINEER
4-13-07

April 2007

TABLE OF CONTENTS

COVER LETTER & EXPLANATION OF REQUEST

I. FORM 1 OVERVIEW & CONCURRENCE

II. CLOMR CASE #05-06-0869R

III. LOMR CASE #04-06-1904P

IV. DRAINAGE REPORT FOR AMOLE CHANNEL – UPDATED APRIL 2007

V. ANNOTATED FIRM

VI. AMOLE PHASE I AS-BUILT PLANS

VII. AMOLE PHASE II AS-BUILT PLANS

VIII. AMOLE PHASE III AS-BUILT PLANS

IX. AMOLE SNOW VISTA TO DELGADO DRIVE

D. Mark Goodwin & Associates, P.A.
Consulting Engineers
P.O. BOX 90606, ALBUQUERQUE,NM 87199
(505) 828-2200 FAX 797-9539

April 9, 2007

Mr. Brad Bingham
Hydrology Department
City of Albuquerque
P.O. Box 1293
Albuquerque, NM 87103

Re: LOMR Request for Amole Channel, Phase 1
(CLOMR – Case # 05-06-0869R)

Dear Mr. Bingham:

The purpose of this letter is to request a letter of Map Revision, removing the floodplain from the private property south of Gibson Blvd. (Section 59.87), west of the Amole Channel Right-of-Way and north of the Big Bend in the Amole Channel. Upstream mapping errors will be corrected as described in the CLOMR. The project was completed in substantial compliance with the approved plans, so there are not any revisions to the hydrology and hydraulic calculations as approved by the CLOMR dated December 20, 2006. We are submitting the following in support of this request:

1. *Form I Overview & Concurrence From*
2. *Check for Review Fee of $4000.00*
3. *As-built plans; certified by a registered professional engineer*
4. *Annotated FIRM*

The attached CLOMR Case #05-06-0869R, proposes several corrections to upstream floodplains that are greatly appreciated, though they are beyond the scope of this project. The corrections benefit the general public, but are not the result of the physical improvements in Phase I, which is for the benefit of private development. In the interest of the general public, as-built plans are being provided for neighboring projects including Phases II and III, (see hydrology and hydraulic calculations in CLOMR Case No. 05-06-0869R), the Amole Channel upstream of the confluence of the Snow Vista Channel (LOMR Case No. 04-06-1904P). While this additional offsite information may not satisfy all of FEMA's technical criteria for floodplain amendment, it does provide the most accurate available documentation of current field conditions in support of all the currently proposed revisions plus one more.

The as-built plans for LOMR Case No. 04-06-1904P, can be used to correct the elevations both on the plan and on the profiles of that LOMR to account for the 3' differences in the NAVD-29 datum used on the plans and the NAVD-88 datum used on the FEMA FIS and FIRM. Three (3) feet should be added to the approved elevations in that LOMR.

Where the west branch of the AMOLE Arroyo joins the main branch of the Snow Vista Arroyo the new AMOLE Water Surface Elevation 5131.6± is at least 4 feet higher than the Snow Vista Elevation 5127.6±, and the abrupt change in elevation is accounted for by an energy dissipating 6' drop in the Amole invert. The energy dissipation is further assured by an abrupt change in direction of the Amole flow. The tie-in referenced in CLOMR Case No. 05-06-0869R, where it says "Please also provide topographic and hydraulic information representing the tie-in to the flood hazard information presented in LOMR Case No. 04-06-1904P", is located in this energy dissipation drop/bend and the elevations don't tie in. Phase III of the Amole, is 4' or more lower than the west branch of the Amole. Conventional Hydraulic models won't model this energy loss. So please accept this as-built plan as the topography, and accept this explanation as the hydraulic information as requested. Also add the 3' elevation correction to the LOMR Case No. 04-06-1904P for benefit of the general public.

Also, attached please find an updated Drainage Report for the Amole Channel, which includes a summary of the hydrology and hydraulic calculations. These are not new calculations. They were revised during the review of the CLOMR. They are incorporated here in as a convenience for the general public and in an effort to maintain an accurate and concise local community record. All elevations both in the plans and in the calculations are on the NAD-29 datum, and must be converted to the FIS and FIRM datum (NAVD-88) by adding 3'.

Please add your community concurrence letter and forward the extra copy to FEMA. Please contact our office with any questions you may have.

Sincerely,

MARK GOODWIN & ASSOCIATES, P.A.

James D. Hughes

James D. Hughes, PE
Senior Engineer

JDH/la

Attachment

FEDERAL EMERGENCY MANAGEMENT AGENCY

OVERVIEW & CONCURRENCE FORM

O.M.B No. 3067-0148
Expires September 30, 2005

PAPERWORK BURDEN DISCLOSURE NOTICE

Public reporting burden for this form is estimated to average 1 hour per response. The burden estimate includes the time for reviewing instructions, searching existing data sources, gathering and maintaining the needed data, and completing, reviewing, and submitting the form. You are not required to respond to this collection of information unless a valid OMB control number appears in the upper right corner of this form. Send comments regarding the accuracy of the burden estimate and any suggestions for reducing this burden to: Information Collections Management, Federal Emergency Management Agency, 500 C Street, SW, Washington DC 20472, Paperwork Reduction Project (3067-0148). Submission of the form is required to obtain or retain benefits under the National Flood Insurance Program. **Please do not send your completed survey to the above address.**

A. REQUESTED RESPONSE FROM FEMA

This request is for a (check one):

☐ CLOMR: A letter from FEMA commenting on whether a proposed project, if built as proposed, would justify a map revision, or proposed hydrology changes (See 44 CFR Ch. 1, Parts 60, 65 & 72).

☒ LOMR: A letter from FEMA officially revising the current NFIP map to show the changes to floodplains, regulatory floodway or flood elevations. (See Parts 60 & 65 of the NFIP Regulations.)

B. OVERVIEW

1. The NFIP map panel(s) affected for all impacted communities is (are):

Community No.	Community Name	State	Map No.	Panel No.	Effective Date
Ex: 480301	City of Katy	TX	480301	0005D	02/08/83
480287	Harris County	TX	48201C	0220G	09/28/90
350002	City of Albuquerque	NM	35001C	0336E	11/19/03

2. Flooding Source: Amole Arroyo

3. Project Name/Identifier: Amole Channel Phase I

4. FEMA zone designations affected: A & AO (choices: A, AH, AO, A1-A30, A99, AE, AR, V, V1-V30, VE, B, C, D, X)

5. Basis for Request and Type of Revision:

a. The basis for this revision request is (check all that apply)

☒ Physical Change ☐ Improved Methodology/Data

☐ Regulatory Floodway Revision ☐ Other (Attach Description)

Note: A photograph and narrative description of the area of concern is not required, but is very helpful during review.

b. The area of revision encompasses the following types of flooding and structures (check all that apply)

Types of Flooding: ☒ Riverine ☐ Coastal ☒ Shallow Flooding (e.g., Zones AO and AH)

☐ Alluvial fan ☐ Lakes ☐ Other (Attach Description)

Structures: ☒ Channelization ☐ Levee/Floodwall ☒ Bridge/Culvert

☐ Dam ☐ Fill ☐ Other, Attach Description

C. REVIEW FEE

Has the review fee for the appropriate request category been included? ☒ Yes Fee amount: $4,000.00

☐ No, Attach Explanation

Please see the FEMA Web site at http://www.fema.gov/fhm/frm_fees.shtm **for Fee Amounts and Exemptions.**

D. SIGNATURE

All documents submitted in support of this request are correct to the best of my knowledge. I understand that any false statement may be punishable by fine or imprisonment under Title 18 of the United States Code, Section 1001.

Name: James D. Hughes, P.E.	Company: Mark Goodwin & Associates, P.A.	
Mailing Address: PO Box 90606 Albuquerque, NM 87199	Daytime Telephone No.: (505) 828-2200 E-Mail Address: doug@goodwinengineers.com	Fax No.: (505) 797-9539
Signature of Requester (required): James D. Hughes		Date: 4-13-07

As the community official responsible for floodplain management, I hereby acknowledge that we have received and reviewed this Letter of Map Revision (LOMR) or conditional LOMR request. Based upon the community's review, we find the completed or proposed project meets or is designed to meet all of the community floodplain management requirements, including the requirement that no fill be placed in the regulatory floodway, and that all necessary Federal, State, and local permits have been, or in the case of a conditional LOMR, will be obtained. In addition, we have determined that the land and any existing or proposed structures to be removed from the SFHA are or will be reasonably safe from flooding as defined in 44CFR 65.2(c), and that we have available upon request by FEMA, all analyses and documentation used to make this determination.

Community Official's Name and Title: Brad Bingham, Flood Plain Administrator		Telephone No.: (505) 924-3986
Community Name: City of Albuquerque, NM	Community Official's Signature (required): X Bradley L. Bingham	Date: 4/18/07

CERTIFICATION BY REGISTERED PROFESSIONAL ENGINEER AND/OR LAND SURVEYOR

This certification is to be signed and sealed by a licensed land surveyor, registered professional engineer, or architect authorized by law to certify elevation information. All documents submitted in support of this request are correct to the best of my knowledge. I understand that any false statement may be punishable by fine or imprisonment under Title 18 of the United States Code, Section 1001.

Certifier's Name: James D. Hughes, P.E.	License No.: 11674	Expiration Date: 12/31/08
Company Name: Mark Goodwin & Associates, PA	Telephone No.: (505) 828-2200	Fax No.: (505) 797-9539
Signature: James D. Hughes		Date: 4-13-07

Ensure the forms that are appropriate to your revision request are included in your submittal.

Form Name and (Number)	Required if ...
☐ Riverine Hydrology and Hydraulics Form (Form 2)	New or revised discharges or water-surface elevations
☐ Riverine Structures Form (Form 3)	Channel is modified, addition/revision of bridge/culverts, addition/revision of levee/floodwall, addition/revision of dam
☐ Coastal Analysis Form (Form 4)	New or revised coastal elevations
☐ Coastal Structures Form (Form 5)	Addition/revision of coastal structure
☐ Alluvial Fan Flooding Form (Form 6)	Flood control measures on alluvial fans

JAMES D. HUGHES
11874
NEW MEXICO
REGISTERED PROFESSIONAL ENGINEER
Seal (optional)

Federal Emergency Management Agency

Washington, D.C. 20472

DEC 20 2006

CERTIFIED MAIL
RETURN RECEIPT REQUESTED

IN REPLY REFER TO:
Case No.: 05-06-0869R

The Honorable Martin J. Chavez
Mayor, City of Albuquerque
P.O. Box 1293
Albuquerque, NM 87103

Community: City of Albuquerque, NM
Community No.: 350002

104

Dear Mayor Chavez:

This responds to a request that the Department of Homeland Security's Federal Emergency Management Agency (FEMA) comment on the effects that a proposed project would have on the effective Flood Insurance Rate Map (FIRM) and Flood Insurance Study (FIS) report for Bernalillo County, New Mexico and Incorporated Areas (the effective FIRM and FIS report for your community), in accordance with Part 65 of the National Flood Insurance Program (NFIP) regulations. In a letter dated February 3, 2005, Mr. Bradley L. Bingham, Floodplain Administrator, City of Albuquerque, requested that FEMA evaluate the effects that construction of a concrete channel along Snow Vista Channel from approximately 600 feet downstream of Redondo Road to the confluence of Amole Arroyo and along Amole Arroyo from its confluence with Snow Vista Channel to approximately 1,800 feet upstream of the Amole Detention Area, including construction of three culvert crossings, would have on the flood hazard information shown on the effective FIRM and FIS report.

All data required to complete our review of this request for a Conditional Letter of Map Revision (CLOMR) were submitted with letters from Mr. James D. Hughes, P.E., Mark Goodwin & Associates, P.A., and Mr. Bingham.

We reviewed the submitted data and the data used to prepare the effective FIRM for your community and determined that the proposed project meets the minimum floodplain management criteria of the NFIP. We believe that, if the proposed project is constructed as shown on the plans entitled "Construction Plans for Amole Channel Phase I, Phase II, and Phase III," prepared by Mark Goodwin & Associates, P.A., dated January 31, 2005, and the data listed below are received, the floodplain boundaries of the flood having a 1-percent chance of being equaled or exceeded in any given year (base flood) will be delineated as shown on the submitted topographic work map entitled "Amole Channel Master Plan," prepared by Mark Goodwin & Associates, P.A., dated September 13, 2004.

Snow Vista Channel

Information submitted with this CLOMR request indicated that Snow Vista Channel is currently shown in the wrong location on the effective FIRM. The location of Snow Vista Channel will not change from its currently existing location as a result of this project, but its location shown on the effective FIRM will be shifted approximately 180 feet to the west from its upstream end to its confluence with Amole Arroyo. The width of the channel will be approximately 50 feet throughout this entire reach, and it will be engineered to contain the base flood. It will be mapped as a Special Flood Hazard Area (SFHA), the area that would be inundated by the base flood, designated Zone A, with no Base Flood Elevations (BFEs) determined.

Amole Arroyo

Information submitted with this CLOMR request indicated that Amole Arroyo is currently shown in the wrong location on the effective FIRM from its confluence with Snow Vista Channel to approximately 1,200 feet downstream of De Anza Drive. This portion of Amole Arroyo will not change from its currently existing location as a result of this project, but its location shown on the effective FIRM will be shifted approximately 180 feet to the west. From approximately 1,200 feet downstream of De Anza Drive to approximately 1,800 feet upstream of the Amole Detention Area, Amole Arroyo will be relocated as a result of the channelization project. The maximum shift of Amole Arroyo resulting from the channelization will be approximately 500 feet at a location approximately 2,700 feet upstream of the Amole Detention Area. The width of the channelized Amole Arroyo will be approximately 50 feet throughout this entire reach, and it will be engineered to contain the base flood. It will be mapped as an SFHA designated Zone A, with no BFEs determined.

Upon completion of the project, your community may submit the data listed below and request that we make a final determination on revising the effective FIRM and FIS report.

- Detailed application and certification forms, which were used in processing this request, must be used for requesting final revisions to the maps. Therefore, when the map revision request for the area covered by this letter is submitted, Form 1, entitled "Overview & Concurrence Form," must be included. (A copy of this form is enclosed.)

- The detailed application and certification forms listed below may be required if as-built conditions differ from the preliminary plans. If required, please submit new forms (copies of which are enclosed) or annotated copies of the previously submitted forms showing the revised information.

  Form 2, entitled "Riverine Hydrology & Hydraulics Form"

  Form 3, entitled "Riverine Structures Form"

  Hydraulic analyses, for as-built conditions, of the base flood, together with a topographic work map showing the revised floodplain boundaries, must be submitted with Form 2.

- Effective October 30, 2005, FEMA revised the fee schedule for reviewing and processing requests for conditional and final modifications to published flood information and maps. In accordance with this schedule, the current fee for this map revision request is $4,000 and must be received before we can begin processing the request. Please note, however, that the fee schedule is subject to change, and requesters are required to submit the fee in effect at the time of the submittal. Payment of this fee shall be made in the form of a check or money order, made payable in U.S. funds to the National Flood Insurance Program, or by credit card. The payment must be forwarded to the following address:

  Federal Emergency Management Agency
  Fee-Charge System Administrator
  P.O. Box 22787
  Alexandria, VA 22304

- As-built plans, certified by a registered professional engineer, of all proposed project elements

- A copy of FIRM Panel 35001C0336 E, which was revised by Letter of Map Revision (LOMR) Case No. 04-06-1904P on January 12, 2005, annotated to show the revised floodplain boundary delineations associated with your project and how they tie into the currently effective floodplain boundary delineations for Snow Vista Channel and Amole Arroyo. Please also provide topographic and hydraulic information representing the tie-in to the flood hazard information presented in LOMR Case No. 04-06-1904P.

- Community acknowledgment of the map revision request

After receiving appropriate documentation to show that the project has been completed, FEMA will initiate a revision to the FIRM and FIS report. Because the BFEs for Amole Arroyo upstream of the confluence with Snow Vista Channel may change as a result of the project, a 90-day appeal period may be initiated, during which community officials and interested persons may appeal the revised BFEs based on scientific or technical data.

The basis of this CLOMR is, in whole or in part, a channel-modification/culvert project. NFIP regulations, as cited in Paragraph 60.3(b)(7), require that communities assure that the flood-carrying capacity within the altered or relocated portion of any watercourse is maintained. This provision is incorporated into your community's existing floodplain management regulations. Consequently, the ultimate responsibility for maintenance of the modified channel and culverts rests with your community.

This CLOMR is based on minimum floodplain management criteria established under the NFIP. Your community is responsible for approving all floodplain development and for ensuring all necessary permits required by Federal or State law have been received. State, county, and community officials, based on knowledge of local conditions and in the interest of safety, may set higher standards for construction in the SFHA. If the State, county, or community has adopted more restrictive or comprehensive floodplain management criteria, these criteria take precedence over the minimum NFIP criteria.

If you have any questions regarding floodplain management regulations for your community or the NFIP in general, please contact the Consultation Coordination Officer (CCO) for your community. Information on the CCO for your community may be obtained by calling the Director, Federal Insurance and Mitigation Division of FEMA in Denton, Texas, at (940) 898-5127. If you have any questions regarding this CLOMR, please call our Map Assistance Center, toll free, at 1-877-FEMA MAP (1-877-336-2627).

Sincerely,

Kevin C Long

Kevin C. Long, CFM, Project Engineer
Engineering Management Section
Mitigation Division

For: William R. Blanton Jr., CFM, Chief
Engineering Management Section
Mitigation Division

Enclosures

cc: Mr. Bradley L. Bingham
Floodplain Administrator
City of Albuquerque

Mr. James D. Hughes, P.E.
Mark Goodwin & Associates, P.A.

DRAINAGE REPORT

for

THE AMOLE CHANNEL

from Confluence with Snow Vista Channel

down to the Amole Dam

Prepared for

Albuquerque Metropolitan Arroyo Flood Control Authority
2600 Prospect NE
Albuquerque, NM 87107
(505) 884-2215

Prepared by

Mark Goodwin & Associates, PA
P.O. Box 90606
Albuquerque, NM 87199
(505) 828-2200

JAMES D. HUGHES
11674
NEW MEXICO
REGISTERED PROFESSIONAL ENGINEER

April 11, '07

July 2004

Updated April 2007

TABLE OF CONTENTS

Report

- Cover Page
- Drainage Information Sheet
- Vicinity Map (M-9)
- Purpose & Scope
- Hydrology
- Hydraulics

Calculations and Data

- Table 1 — Comparison of Results (1999 vs. 2004)
- Table 2 — Summary of Hydrology
- Table 3 — Time of Concintration Calculations
- Table 4 — Summary of Hydraulics (Updated April 2007)
- Existing Conditions Drainage Basin Map
- Future Developed Conditions Drainage Basin Map
- Channel Plan

Appendix A

- AHYMO, 2004 Existing Conditions 100-Yr Summary
- AHYMO, Future Developed Conditions Summary
- AHYMO, 2004 Existing Conditions 100-Yr Detailed Output
- AHYMO, Future Developed Conditions Detailed Output
- AHYMO, 2004 Existing Conditions Input
- AHYMO, Future Developed Conditions Input
- AHYMO, 1998 Existing Conditions Snow Vista Summary
- AHYMO, 1998 Existing Conditions Amole Summary

Appendix B

- Existing Ponds
  - Summary
  - Input Calculations
  - Asbuilt Plans
  - Split Flow Summary & Plans

Appendix C

- Split Flow Summary & Plans

Appendix D

- HEC-RAS Hydraulics
  - Profile
  - Summary Tables 1 & 2
  - X-Sections
  - Detailed Output

PURPOSE & SCOPE

The purpose of this report is to document the adequacy of the proposed Amole Channel from the confluence of the Snow Vista Channel down to the Amole Dam. It includes Hydrology and Hydraulic calculations together with maps of the drainage basins and plans of the proposed shot-crete channel and bridges proposed at 98th Street and Blake Road. It includes a proposed levee in two locations and a hydraulic model of the existing bridge at Gibson Boulevard, and five (5) major junctions both existing and proposed. Freeboard and super elevation calculations are summarized in the Hydraulic Summary Table. Hydrology analysis is provided for both Existing and Future Developed Conditions. The hydraulic calculations use only the higher Future Developed flows since the lower existing flows will probably be contained if the higher ones are contained.

Chapter I

HYDROLOGY

Purpose & Existing Conditions

The purposes of this re-study is to determine both existing and future developed flows for the reach of the channel being designed by this project, from the confluence of the Snow Vista and Amole channels down to the Amole channel rundown into the Amole Dam. This is necessary because previous studies are either inaccurate or incomplete, or both. The 1999 Amole-Hubble DMP is the approved plan that governs development in the watershed. It's ponding requirements have generally been enforced, but it's drainage patterns have been changed. Typically the change is a shift in the point of discharge for several sub-basins to a different place on the channel, usually to a lower place on the channel, though not always lower (see Drainage Basin Maps in Appendix A). Most of the 15 or so existing ponds have been constructed since the 1999 DMP so the specifics of each pond were not modeled in the 1999 DMP. This re-study attempts to model actual constructed conditions and further differentiates the theoretical (planned but not precisely implemented) from the true field condition. As-Built plans are in Appendix A and each pond was inspected. Engineering judgment was used in determining the extent to which the plans and the as-built plans matched actual field conditions. Further surveys of the pond were beyond the scope of the project so some assumptions were made where field conditions deviated from plans. Generally the permanent ponds accomplish their intended function in accordance with the1999 DMP (see Table 1 for Comparison of Results). But most of the temporary ponds either don't exist at all or don't function as intended. The improperly functioning ponds only impact existing conditions, not future developed conditions, and they do not adversely impact the design or function of the section of the Amole channel that is under consideration in this report.

Existing and future developed conditions for the Westgate Dam and basin remain the same as in the 1999 Amole -Hubble Drainage Management Plan. Westgate Dam is capable of handling the probable maximum flood (PMF), and it only discharges 78 cfs whether the watershed is developed or not.

The Power Line basin discharges 501 cfs under existing conditions and 19 cfs under developed conditions in the 1999 DMP. However, the highest flows in this channel may result from an interim condition where the power line basin remains undeveloped and the lower basins are developed. That condition is modeled in this study as the "Developed Condition".

Existing conditions in the Snow Vista and Amole basins are updated in this report to more accurately reflect significant development since the 1999 DMP. The new basin maps are based on 2004 property lines, 2003 orthophoto and 2001 topography. Fifteen (15) existing ponds were re-analyzed using as-built records and field observation. Several were so poorly constructed that they were not modeled. Several existing split flows were identified and added to the model to more accurately identify the magnitude of the flows at each location where flow enters the channel.

The single most significant flow change is basin 365, where a significant portion of the basin was diverted south into the Amole channel and the new time of concentration is longer than previously modeled. Also, basin 105 is mostly diverted east into the Tierra Bieta basin by a split both in existing and future developed conditions. Basin 310 is served by pond 10E and no further ponding is necessary for development there.

Developed conditions in the Snow Vista watershed are dominated by peak shaving ponds. It is likely that the future ponds will store more of the leading edge of the hydrographs than conservatively modeled here so actual peak future flows will probably be less than this report predicts. Developed conditions in the Amole watershed are based on two current studies; 1) the Gibson Blvd Drainage Plan by Bohannan-Huston, Inc., dated November 21, 2003, and 2) the Drainage Report for Longford Homes by Wilson Engineering, dated June 23, 2004. The sub-basins in those reports were combined into larger basins in this report, and composite estimates of future predictions in those reports. Pipe and channel routings were not used unless they had a significant impact on the timing of the peak. They were not used where peak shaving ponds dominate the shape and timing of the hydrographs, or where timing of the peak can more easily be accounted for by time of concentration calculations for larger basins. Conveyance factors from Table B-1 of the DPM, Section 22.2 were used except that a factor of 7 was used for pipes 48" or smaller and a factor of 11 was used for pipes 48" or larger. Table 3 summarizes time of concentration calculations. Table 2 summarize the Input parameters and resulting flows from AHYMO for both existing and future developed conditions.

Also, considered but not relied on heavily, are the following references:

LOMR for Sunrise Ranch West, January 30, 2002
CLOMR for Amole Arroyo, November 2003.

TABLE 1
COMPARISON OF RESULTS

AP #	Existing Conditions		Developed Conditions	
	2004	1998	2004	1998
Tower Road	149.23	203.91	453.66	419.19
22.0	572.18	407.20	755.65	747.11
22.1	811.58	641.92	989.20	916.28
23	1,287.04	1,864.58	1,474.43	2,058.10
Westgate 5	73.15	73.15	73.47	73.47
Powerline 6	501.27	501.27	501.27	19.34
7	754.22	608.81	1,215.77	693.16
8	1,961.94	1,989.94	2,639.44	
Gibson 9	2,021.45	2,201.53	2,946.65	2,824.84
Blake 10	2,021.45	2,236.63	3,371.00	3,310.59
Bend	2,021.45	2,134.94	3,783.28	3,411.82
12	2,693.17	3,022.36	4,218.55	4,709.47

TABLE 2
SUMMARY OF HYDROLOGY
Input and Resulting Flows for Existing and Future Developed Conditions

Description	Basin ID	Area Acres	Area Sq. Mi.	Land Treatment				Tp (hr)	100-YR Peak Flow		Contributing basins
				A	B	C	D		Inc. (cfs)	Cumm (cfs)	
EXISTING CONDITIONS											
Undeveloped	100	80.9	0.1264	70	0	20	10	0.17	127.97		100
Undeveloped	105	20.1	0.0314	25	0	10	65	0.14	66.19		100 & 105
	split # 105								12.00	139.97	
Undeveloped	110	29.4	0.0459	80	0	10	10	0.13	51.22		110
	pond 1e		0.0000						49.94	189.91	100 - 110
Undeveloped	115	13.4	0.0209	90	0	10	0	0.13	19.29	208.32	100 - 115
Undeveloped	120	32.2	0.0503	78	5	10	7	0.15	48.19	209.48	100 - 120
Undeveloped	125	39.1	0.0611	78	5	10	7	0.15	58.54	260.42	100 - 120
	pond 4e									132.45	100 - 120
Developed	130	4.5	0.0070	0	14	30	56	0.13	16.05	61.58	100 - 130
Developed	180	22.8	0.0356	0	14	30	56	0.13	81.54		180
	pond 6e		0.0000						49.95	110.33	100 - 180
Undeveloped	190	22.8	0.0356	50	0	40	10	0.17	41.14	110.33	100 - 190
Developed	200	12.4	0.0194	0	10	70	20	0.13	38.41	137.09	100 - 200
	pond 7e									62.85	100 - 200
Undeveloped	240	27.5	0.0430	85	0	10	5	0.13	43.84	86.07	240 & Pond 4 spillway
Developed	250	17.4	0.0272	0	14	30	56	0.18	52.96	109.78	240 - 250
Developed	260	30.2	0.0473	0	14	30	56	0.19	89.30	145.83	240 - 260
	channel total	??								149.24	100 - 260
Developed	270	10.8	0.0169	0	14	30	56	0.15	35.75		270
	pond 8e								10.56	146.78	100 - 270
Developed	280	18.5	0.0289	0	14	30	56	0.22	50.11		280
	pond 9e								21.86	162.33	100 - 280
Developed	300	19.7	0.0308	30	0	20	50	0.13	61.04		300
	pond 2e								5.59		300
Developed	305	17.1	0.0267	0	0	20	80	0.13	69.09	70.36	305
	pond 3e									4.01	300 - 305

TABLE 2
SUMMARY OF HYDROLOGY
Input and Resulting Flows for Existing and Future Developed Conditions

Description	Basin ID	Area Acres	Area Sq. Mi.	Land Treatment				Tp (hr)	100-YR Peak Flow		Contributing basins
				A	B	C	D		Inc. (cfs)	Cumm (cfs)	
Developed	310	52.3	0.0817	0	14	30	56	0.18	56.47	59.67	300 - 310
Developed	320	39.0	0.0609	0	14	30	56	0.13	139.48	191.72	300 - 320
	split to pond 10e									35.73	
Developed	330	10.1	0.0158	0	14	30	56	0.13	36.20	72.13	330 & split from 300-320
	pond 10e								10.63	161.26	300-330
Developed	340	71.2	0.1113	0	14	30	56	0.15	235.02	390.44	300 - 340
	add split from 250	238.7								427.48	300-340 & split from 250
	channel total									572.18	100-340
Undeveloped	351	29.5	0.0461	100	0	0	0	0.15	34.40	34.40	351
Developed	352	17.1	0.0267	0	14	30	56	0.13	61.16	94.21	351 - 352
	pond 12e									39.83	351 - 352
Developed	353	67.3	0.1052	0	14	30	56	0.15	222.18	258.58	351 - 353
	pond 13e									188.57	351 - 353
Developed	354	23.8	0.0372	0	20	35	45	0.21	61.06	248.11	351 - 354
	channel total	137.7								811.58	100 - 354
Undeveloped	355	15.8	0.0247	100	0	0	0	0.16	17.55	17.55	355
Developed	356	21.2	0.0331	0	14	30	56	0.19	62.50	80.05	355 - 356
Developed	357	18.0	0.0281	0	14	30	56	0.16	56.89	56.89	357
	pond 15e								8.70	85.90	355 - 357
Undeveloped	358	17.9	0.0280	67	0	20	13	0.16	30.40	102.35	355 - 358
	channel total	210.6								897.28	100-358
Undeveloped	361	12.3	0.0192	100	0	0	0	0.13	16.22		361
	split to 365									11.49	split from 361

TABLE 2
SUMMARY OF HYDROLOGY
Input and Resulting Flows for Existing and Future Developed Conditions

Description	Basin ID	Area Acres	Area Sq. Mi.	Land Treatment				Tp (hr)	100-YR Peak Flow		Contributing basins
				A	B	C	D		Inc. (cfs)	Cumm (cfs)	
Undeveloped	362	23.0	0.0359	100	0	0	0	0.18	22.83	9.60	361 & 362
	split to 365									17.96	split from 361 & 362
Developed	363	11.9	0.0186	0	14	30	56	0.13	42.61	52.21	361 - 363
Undeveloped	364	6.9	0.0108	75	0	25	0	0.13	11.35	63.56	361 - 364
	pond 14e									4.90	361 - 364
	split to 370								0.00	0.00	361 - 364
Developed	365	186.6	0.2916	0	20	30	50	0.34	362.53	381.37	361 - 365
Developed	370	27.9	0.0436	0	20	35	45	0.23	68.52	68.52	370
	split to 365								34.26	410.21	361 - 370
Undeveloped	371	33.4	0.0522	100	0	0	0	0.13	44.09	44.09	370 - 371
Developed	372	57.2	0.0894	0	20	35	45	0.32	113.62	168.26	370 - 372
	split to 365								24.56	433.08	361 - 372
	channel total									1287.04	100 - 372
Developed	373	17.0	0.0266	0	20	35	45	0.13	57.39	181.26	370 - 373
	Westgat e								73.15	73.15	10006 - 10018
	power line								501.27	556.61	
Undeveloped	374	76.5	0.1195	75	10	10	5	0.21	88.98	558.89	10006 - 10018 & 374
City Park /Open space	375	31.5	0.0492	60	20	10	10	0.15	52.65	561.99	10006 - 10018 & 374 -375
Developed	376	25.6	0.0400	0	20	35	45	0.17	74.57	74.57	376
Developed	377	14.5	0.0227	0	14	30	56	0.13	52.00	582.00	10006 - 10018 & 374 -377
Developed	378	50.3	0.0787	0	14	30	56	0.13	180.18	754.22	10006 - 10018 & 374 -378
Developed	379	13.2	0.0206	0	14	30	56	0.13	47.19	1961.94	100 - 379 & 10006 - 10018

TABLE 2
SUMMARY OF HYDROLOGY
Input and Resulting Flows for Existing and Future Developed Conditions

Description	Basin ID	Area Acres	Area Sq. Mi.	Land Treatment				Tp (hr)	100-YR Peak Flow		Contributing basins
				A	B	C	D		Inc. (cfs)	Cumm (cfs)	
Undeveloped	380	268.8	0.4200	95	5	0	0	0.30	197.48	2021.45	100 - 380 & 10006 - 10018
Undeveloped	381	668.9	1.0452	90	5	5	0	0.33	472.19		381
Undeveloped	382	147.5	0.2305	95	5	0	0	0.27	114.15	492.18	381 - 382
Undeveloped	383	365.9	0.5717	80	10	10	0	0.50	185.95	671.72	381 - 383
	channel total	1451.1								2693.17	all
FUTURE DEVELOPED CONDITIONS											
Future	100	80.8	0.1263	0	5	10	85	0.17	327.89		100
	pond 100								105.08		100
Future	105	20.1	0.0314	0	5	10	85	0.14	82.11		105
	split # 105								12.00	117.08	100 - 105
Future	110	43.5	0.0680	0	5	10	85	0.13	177.17		110
	pond 110		0.0000						56.55	173.64	100 - 110
Future	120	26.5	0.0414	0	5	10	85	0.15	107.91		120
	pond 120								34.45	208.09	100 - 120
Developed	130	24.2	0.0378	0	5	10	85	0.13	98.79		130
	pond 130								31.46	239.55	100 - 130
Future	140	33.7	0.0527	0	7	14	79	0.13	128.65		140
	pond 140								43.85	283.40	100 - 140
Future	150	16.1	0.0252	0	10	20	70	0.13	61.28		150
	pond 150								20.93	304.33	100 - 150
Future	160	14.2	0.0222	0	10	20	70	0.13	53.96		160

TABLE 2
SUMMARY OF HYDROLOGY
Input and Resulting Flows for Existing and Future Developed Conditions

Description	Basin ID	Area Acres	Area Sq. Mi.	Land Treatment				Tp (hr)	100-YR Peak Flow		Contributing basins
				A	B	C	D		Inc. (cfs)	Cumm (cfs)	
	pond 160								18.46	322.79	100 - 160
Future	170	2.2	0.0034	0	14	30	56	0.13	8.03	330.82	100 - 170
Developed	180	22.8	0.0356	0	14	30	56	0.13	81.54		180
	pond 6e		0.0000						49.95	378.17	100 - 180
Future	190	22.8	0.0356	0	5	10	85	0.17	92.79		100 - 190
	Pond 190								29.64	407.81	190
Developed	200	12.4	0.0194	0	10	70	20	0.13	38.41	434.58	100 - 200
	pond 7e									395.57	100 - 200
Developed	250	17.4	0.0272	0	14	30	56	0.18	52.96		250
Developed	260	30.2	0.0473	0	14	30	56	0.19	89.30	121.08	250 - 260
	channel total	1818.2								453.66	100 - 260
Developed	270	10.8	0.0169	0	14	30	56	0.15	35.76		270
	Pond 8e								10.56	460.25	100 - 270
Developed	280	18.5	0.0289	0	14	30	56	0.22	50.11		280
	Pond 9e								21.86	481.76	100 - 280
Developed	300	19.7	0.0308	30	0	20	50	0.13	61.04		300
	pond 2e								5.59		300
Developed	305	17.1	0.0267	0	0	20	80	0.13	69.09	70.36	300 - 305
	pond 3e									4.01	300 - 305
Developed	310	52.3	0.0817	0	14	30	56	0.18	187.04	189.93	300 - 310
Developed	320	39.0	0.0609	0	14	30	56	0.13	139.48	329.42	300 - 320
	split to pond 10e								154.41		
Developed	330	10.1	0.0158	0	14	30	56	0.13	36.20	190.60	330 & split from 300 - 320
	pond 10e								21.52	190.42	330 & split from 300 - 320
Developed	340	71.2	0.1113	0	14	30	56	0.15	235.02	417.89	300 - 340

TABLE 2
SUMMARY OF HYDROLOGY
Input and Resulting Flows for Existing and Future Developed Conditions

Description	Basin ID	Area Acres	Area Sq. Mi.	Land Treatment				Tp (hr)	100-YR Peak Flow		Contributing basins
				A	B	C	D		Inc. (cfs)	Cumm (cfs)	
	add split from 250									437.73	300 - 340 & split from 250
	channel total									755.65	100 - 340
Undeveloped	351	35.7	0.0558	0	14	30	56	0.13	105.59		351
	Pond 351								38.35		
Developed	352	17.1	0.0267	0	14	30	56	0.13	61.16	99.51	351 - 352
	pond 12e									42.41	351 - 352
Developed	353	67.3	0.1052	0	14	30	56	0.15	222.18	259.93	351 - 353
	pond 13e									189.14	351 - 353
Developed	354	23.8	0.0372	0	20	35	45	0.21	61.06	248.58	351 - 354
	channel total									989.20	100 - 354
Future	355	15.8	0.0247	0	13	26	61	0.16	57.86	1004.14	100 - 355
Developed	356	21.2	0.0331	0	14	30	56	0.19	62.50		
Developed	357	18.0	0.0281	0	14	30	56	0.16	56.89		357
	pond 13e								8.70	68.36	356 - 357
Future	358	17.9	0.0280	0	13	26	61	0.16	65.58	125.41	355 - 358
	channel total									1083.15	100 - 358
Developed	365	186.6	0.2916	0	20	30	50	0.34	362.53		361 - 365
Developed	370	27.9	0.0436	0	20	35	45	0.23	68.52		370
	split to 365								32.79	376.80	365 - 370
Developed	372	57.2	0.0894	0	20	35	45	0.32	113.62	127.90	370 - 372
	split to 365								14.47	391.28	361 - 372 @ 365
	channel total									1474.43	100 - 372 @ 365
Developed	373	17.0	0.0266	0	20	35	45	0.13	57.39	146.95	370 - 373

TABLE 2
SUMMARY OF HYDROLOGY
Input and Resulting Flows for Existing and Future Developed Conditions

Description	Basin ID	Area Acres	Area Sq. Mi.	Land Treatment				Tp (hr)	100-YR Peak Flow		Contributing basins
				A	B	C	D		Inc. (cfs)	Cumm (cfs)	
	power line									501.27	10006 - 10018
Undeveloped	374	156.2	0.2441	0	14	30	56	0.40	287.74	749.07	10006 - 10018 & 374
	380								258.59	935.44	380
City Park / Open space	375	31.5	0.0492	60	20	10	10	0.15	52.65	941.50	10006 - 10018, 374 -375 & 380
Developed	376	25.6	0.0400	0	20	35	45	0.17	74.57		10006 - 10018 & 374 -376
Developed	377	14.5	0.0227	0	14	30	56	0.13	52.00	1146.19	10006 - 10018 & 374 -377
Developed	378	50.3	0.0787	0	14	30	56	0.13	180.18	1215.77	10006 - 10018 & 374 -378
	channel total									2639.44	100 - 378 & 10006 - 10018
Developed	379	13.2	0.0206	0	14	30	56	0.13	47.19	2656.83	100 - 379 & 10006 - 10018
Future	381	147.8	0.2309	0	11	21	68	0.22	423.47	2946.65	100 - 381
Future	382	197.6	0.3088	0	11	21	68	0.22	563.76	3371.00	381 - 382
Future	383	200.3	0.3130	0	14	30	56	0.21	547.32	3783.28	381 - 383
Future	384	153.5	0.2398	0	17	33	50	0.21	420.19	4107.78	
Future	385	14.9	0.0233	0	14	30	56	0.13	55.45	4132.02	
Future	386	61.6	0.0963	0	17	33	50	0.17	192.22	4218.55	

100 YEAR PRECIPITATION *(From Figures D, E and F, and Eq. 28 of DPM 22.2)*
P_{60} = 1.90", P_{360} = 2.20", P_{1440} = 2.67", P_{10} days = $10.0-[24.9/(2.67")^{1.4}]$ = 3.70"

TABLE 3
TIME OF CONCENTRATION COMPUTATIONS

Basin ID	Length (ft)	Slope %	K	V (fps)	Tc (min)	Tp (hr)
100	400	3.3	0.7	1.27	5.2	
	1600	4.0	2.0	4.00	6.7	
	1100	3.4	3.0	5.53	3.3	
					15.2	0.17
105	400	2.0	1.0	1.41	4.7	
	900	1.6	2.0	2.53	5.9	
	350	3.4	2.0	3.69	1.6	
					12.2	0.14
110 & 115	400	4.0	0.7	1.40	4.8	
	1600	3.8	2.0	3.90	6.8	
					11.6	0.13
120 & 125	400	4.0	0.7	1.40	4.8	
	1600	3.1	2.0	3.52	7.6	
	400	2.5	3.0	4.74	1.4	
					13.7	0.15
130	MINIMUM					0.13
180	MINIMUM					0.13
190	400	4.0	0.7	1.40	4.8	
	700	2.6	2.0	3.22	3.6	
	500	0.4	2.0	1.26	6.6	
					15.0	0.17
200	MINIMUM					0.13
240	400	4.0	0.7	1.40	4.8	
	1600	3.4	2.0	3.69	7.2	
					12.0	0.13
250	100	0.5	0.7	0.50	3.4	
	300	0.5	2.0	1.41	3.5	

TABLE 3
TIME OF CONCENTRATION COMPUTATIONS

Basin ID	Length (ft)	Slope %	K	V (fps)	Tc (min)	Tp (hr)
	1600	2.0	2.0	2.83	9.4	
					16.3	0.18
260	100	0.5	0.7	0.50	3.4	
	300	2.0	1.0	1.41	3.5	
	1600	1.6	2.0	2.53	10.5	
					17.4	0.19
270	100	2.5	0.7	1.11	1.5	
	250	4.0	1.0	2.00	2.1	
	850	0.5	2.0	1.41	10.0	
					13.6	0.15
280	100	0.5	0.7	0.50	3.4	
	200	2.0	2.0	2.83	1.2	
	1300	0.5	2.0	1.41	15.3	
					19.9	0.22
300	MINIMUM					0.13
305	MINIMUM					0.13
310	400	6.0	0.7	1.71	3.9	
	950	4.4	2.0	4.20	3.8	
	900	0.7	2.0	1.67	9.0	
					16.6	0.18
320	MINIMUM					0.13
330	MINIMUM					0.13
340	100	1.0	0.7	0.70	2.4	
	300	2.0	1.0	1.41	3.5	
	600	4.0	2.0	4.00	2.5	
	2400	3.0	5.0	8.66	4.6	
	400	1.5	11.0	13.47	0.5	
					13.5	0.15
351	400	6.0	0.7	1.71	3.9	
	700	4.3	2.0	4.15	2.8	
	600	0.5	2.0	1.41	7.1	
					13.8	0.15

TABLE 3
TIME OF CONCENTRATION COMPUTATIONS

Basin ID	Length (ft)	Slope %	K	V (fps)	Tc (min)	Tp (hr)
352	MINIMUM					0.13
353	100	0.5	0.7	0.50	3.4	
	300	0.5	1.0	0.71	7.1	
	1600	4.0	7.0	14.00	1.9	
	1200	3.0	11.0	19.05	1.1	
					13.4	0.15
354	100	0.5	0.7	0.50	3.4	
	150	0.5	1.0	0.71	3.5	
	1750	4.0	2.0	4.00	7.3	
	1400	3.3	3.0	5.45	4.3	
					18.5	0.21
355	400	3.0	0.7	1.21	5.5	
	1100	1.0	2.0	2.00	9.2	
					14.7	0.16
356	400	3.5	0.7	1.31	5.1	
	800	1.0	2.0	2.00	6.7	
	1500	1.0	5.0	5.00	5.0	
					16.8	0.19
357	100	2.0	0.7	0.99	1.7	
	300	0.7	1.0	0.84	6.0	
	800	1.8	2.0	2.68	5.0	
	400	2.5	2.0	3.16	2.1	
					14.7	0.16
358	400	2.0	0.7	0.99	6.7	
	300	2.0	2.0	2.83	1.8	
	1300	0.5	5.0	3.43	6.3	
					14.8	0.16

TABLE 3
TIME OF CONCENTRATION COMPUTATIONS

Basin ID	Length (ft)	Slope %	K	V (fps)	Tc (min)	Tp (hr)
361	MINIMUM					0.13
362	400	6.0	0.7	1.71	3.9	
	550	3.3	2.0	3.63	2.5	
	800	0.5	2.0	1.41	9.4	
					15.8	0.18
363	MINIMUM					0.13
364	MINIMUM					0.13
365	100	0.5	0.7	0.50	3.4	
	300	4.0	1.0	2.00	2.5	
	600	0.5	2.0	1.41	7.1	
	1000	1.5	2.0	2.45	6.8	
	1850	3.6	3.0	5.69	5.4	
	2250	2.2	5.0	7.42	5.1	
					30.2	0.34
370	100	0.5	0.7	0.50	3.4	
	300	0.5	1.0	0.71	7.1	
	250	0.5	2.0	1.41	2.9	
	1600	3.5	2.0	3.74	7.1	
					20.5	0.23
371	400	4.5	0.7	1.48	4.5	
	600	4.3	2.0	4.15	2.4	
	500	0.7	2.0	1.67	5.0	
					11.9	0.13
372	100	0.5	0.7	0.50	3.4	
	300	0.5	1.0	0.71	7.1	
	900	1.0	2.0	2.00	7.5	
	700	2.3	2.0	3.03	3.8	
	800	3.5	3.0	5.61	2.4	
	1200	1.8	3.0	4.02	5.0	
					29.1	0.32
373	MINIMUM					0.13
374	400	4.5	0.7	1.48	4.5	

TABLE 3
TIME OF CONCENTRATION COMPUTATIONS

Basin ID	Length (ft)	Slope %	K	V (fps)	Tc (min)	Tp (hr)
	1600	3.1	2.0	3.52	7.6	
	2000	3.0	3.0	5.20	6.4	
					18.5	0.21
375	400	3.8	0.7	1.36	4.9	
	1600	3.1	2.0	3.52	7.6	
	800	2.8	11.0	18.41	0.7	
					13.2	0.15
376	100	0.5	0.7	0.50	3.4	
	300	3.1	1.0	1.76	2.8	
	1900	3.1	2.0	3.52	9.0	
					15.2	0.17
377	MINIMUM					0.13
378	MINIMUM					0.13
379	MINIMUM					0.13
380	400	3.4	0.7	1.29	5.2	
	1600	3.3	2.0	3.63	7.3	
	4600	3.2	3.0	5.37	14.3	
					26.8	0.30
381	400	12.0	0.7	2.42	2.7	
	1600	7.0	2.0	5.29	5.0	
	2000	5.5	3.0	7.04	4.7	
	4000	3.7	3.0	5.77	11.6	
	1700	2.9	3.0	5.11	5.5	
					29.6	0.33
382	400	4.0	0.7	1.40	4.8	
	1000	3.0	2.0	3.46	4.8	
	2100	3.5	3.0	5.61	6.2	
	2200	2.0	3.0	4.24	8.6	
					24.5	0.27
383	Use the lag method where L=12900', Lca=7400', and s=3.9%					
DEV 374	100	0.5	0.7	0.50	3.4	

TABLE 3
TIME OF CONCENTRATION COMPUTATIONS

Basin ID	Length (ft)	Slope %	K	V (fps)	Tc (min)	Tp (hr)
	300	0.5	1.0	0.71	7.1	
	1300	0.5	2.0	1.41	15.3	
	2000	0.5	5.0	3.54	9.4	
	800	2.9	11.0	18.73	0.7	
					35.9	0.40
DEV 380	100	0.5	0.7	0.50	3.4	
	300	2.5	1.0	1.58	3.2	
	1600	3.3	2.0	3.63	7.3	
	1800	1.0	5.0	5.00	6.0	
					19.9	0.22
DEV 381-2	100	1.0	0.7	0.70	2.4	
	300	3.0	1.0	1.73	2.9	
	1000	1.0	2.0	2.00	8.3	
	2400	3.3	7.0	12.72	3.1	
	3500	3.0	11.0	19.05	3.1	
					19.8	0.22
DEV 383-4	100	1.0	0.7	0.70	2.4	
	300	0.5	1.0	0.71	7.1	
	500	3.0	2.0	3.46	2.4	
	1000	3.0	7.0	12.12	1.4	
	1600	0.5	11.0	7.78	3.4	
	2600	2.5	11.0	17.39	2.5	
					19.2	0.21
DEV 386	100.	1.0	0.7	0.70	2.4	
	300	3.0	1.0	1.73	2.9	
	600	3.0	2.0	3.46	2.9	
	500	1.0	2.0	2.00	4.2	
	1400	0.7	11.0	9.20	2.5	
					14.9	0.17

TABLE #4 HYDRAULIC SUMMARY

River Sta	Q Total (cfs)	Depth (ft)	Vel Chnl (ft/s)	Top Width (ft)	Froude #	Radius (ft)	Super-elev (ft)	Req'd Dpth at curve (ft)	Freeboard Req'd (ft)	Min Dpth w/ Frbd (ft)	Min Dpth w/ Frbd & Super (ft)	Act Dpth LT	Act Dpth RT
6.74	4218.55	4.94	21.45	40.00	1.70	450	0.83	5.77	2.04	6.98	7.80	5.5	8.2
7.23714*	4218.55	5.21	20.89	43.37	1.71	450	0.85	6.06	2.03	7.24	8.09	5.5	8.2
7.73428*	4218.55	5.33	20.48	46.74	1.72	450	0.88	6.21	2.02	7.35	8.23	5.5	8.2
8.23142*	4218.55	5.36	20.22	50.07	1.75	450	0.92	6.28	2.02	7.38	8.29	5.5	8.2
8.72857*	4218.55	5.29	20.09	52.88	1.78	450	0.96	6.25	2.01	7.30	8.26	5.5	8.2
9.22571*	4218.55	5.15	20.09	54.98	1.81	450	1.00	6.15	2.00	7.15	8.15	8.2	8.2
9.72285*	4218.55	4.92	20.33	56.61	1.87	450	1.05	5.97	2.00	6.92	7.97	8.2	8.2
10.22	4218.55	4.61	20.87	57.66	1.96	450	1.13	5.74	2.00	6.61	7.74	8.2	8.2
10.65	4218.55	5.60	19.60	51.19	1.68	1000	0.40	6.00	2.01	7.61	8.00	9.0	8.0
10.6925*	4218.55	5.60	19.61	51.18	1.69	1000	0.40	6.00	2.01	7.61	8.00	9.0	8.0
11.165*	4218.55	5.58	19.68	51.12	1.69	1000	0.40	5.98	2.01	7.59	7.99	9.0	8.0
11.6375*	4218.55	5.56	19.78	51.04	1.70	1000	0.40	5.96	2.01	7.57	7.97	9.0	8.0
12.11*	4218.55	5.53	19.90	50.93	1.72	1000	0.41	5.94	2.01	7.54	7.95	9.0	8.0
12.5825*	4218.55	5.49	20.11	50.76	1.74	1000	0.41	5.90	2.02	7.51	7.92	9.0	8.0
13.055*	4218.55	5.43	20.39	50.53	1.78	1000	0.42	5.85	2.02	7.45	7.88	9.0	8.0
13.5275*	4218.55	5.36	20.77	50.24	1.82	1000	0.44	5.80	2.03	7.39	7.83	9.0	8.0
14.00	4218.55	5.27	21.25	49.87	1.88	1000	0.45	5.72	2.04	7.31	7.77	9.0	8.0
14.4875*	4218.55	5.29	21.14	49.95	1.86	1000	0.45	5.74	2.04	7.33	7.78	9.0	8.0
14.975*	4218.55	5.31	21.01	50.05	1.85	1000	0.45	5.76	2.04	7.35	7.79	9.0	8.0
15.4625*	4218.55	5.35	20.84	50.18	1.83	1000	0.44	5.79	2.03	7.38	7.82	9.0	8.0
15.95*	4218.55	5.39	20.61	50.37	1.80	1000	0.43	5.82	2.03	7.42	7.85	9.0	8.0
16.4375*	4218.55	5.44	20.35	50.57	1.77	1000	0.42	5.86	2.02	7.46	7.89	9.0	8.0
16.925*	4218.55	5.50	20.04	50.82	1.74	1000	0.41	5.91	2.02	7.52	7.93	9.0	8.0
17.4125*	4218.55	5.58	19.67	51.13	1.69	1000	0.40	5.98	2.01	7.59	7.99	10.5	9.5
17.90	4218.55	5.69	19.20	51.54	1.64	1000	0.38	6.07	2.00	7.69	8.07	10.5	9.5
18.10	3783.28	4.85	21.25	48.20	1.95	1000	0.44	5.29	2.03	6.88	7.32	8.2	7.4
18.5869*	3783.28	4.85	21.25	48.20	1.95	1000	0.44	5.29	2.03	6.88	7.32	8.2	7.4
19.0739*	3783.28	4.85	21.25	48.20	1.95	1000	0.44	5.29	2.03	6.88	7.32	8.2	7.4
19.5609*	3783.28	4.85	21.25	48.20	1.95				2.03	6.88	N/A	8.2	7.4
20.0479*	3783.28	4.85	21.25	48.20	1.95				2.03	6.88	N/A	8.2	7.4
20.5349*	3783.28	4.85	21.25	48.20	1.95				2.03	6.88	N/A	8.2	7.4
21.0219*	3783.28	4.85	21.25	48.20	1.95				2.03	6.88	N/A	8.2	7.4
21.5089*	3783.28	4.85	21.25	48.20	1.95				2.03	6.88	N/A	8.2	7.4
21.9959*	3783.28	4.85	21.25	48.20	1.95				2.03	6.88	N/A	8.2	7.4
22.4829*	3783.28	4.85	21.25	48.20	1.95				2.03	6.88	N/A	8.2	7.4

TABLE #4 HYDRAULIC SUMMARY

River Sta	Q Total (cfs)	Depth (ft)	Vel Chnl (ft/s)	Top Width (ft)	Froude #	Radius (ft)	Super-elev (ft)	Req'd Dpth at curve (ft)	Freeboard Req'd (ft)	Min Dpth w/ Frbd (ft)	Min Dpth w/ Frbd & Super (ft)	Act Dpth LT	Act Dpth RT
22.9699*	3783.28	4.85	21.25	48.20	1.95				2.03	6.88	N/A	8.2	7.4
23.457*	3783.28	4.84	21.28	48.17	1.95				2.03	6.87	N/A	8.2	7.4
23.944*	3783.28	4.84	21.30	48.16	1.96				2.03	6.87	N/A	8.2	7.4
24.431*	3783.28	4.83	21.33	48.14	1.96				2.03	6.86	N/A	8.2	7.4
24.918*	3783.28	4.83	21.37	48.11	1.96				2.03	6.86	N/A	8.2	7.4
25.405*	3783.28	4.82	21.44	48.07	1.97				2.03	6.85	N/A	8.2	7.4
25.892*	3783.28	4.80	21.52	48.01	1.98	250	1.80	6.60	2.03	6.83	8.63	10.6	8.9
26.379*	3783.28	4.78	21.63	47.93	2.00	250	1.81	6.59	2.03	6.81	8.62	10.6	8.9
26.866*	3783.28	4.75	21.82	47.81	2.02	250	1.84	6.59	2.04	6.79	8.63	10.6	8.9
27.353*	3783.28	4.71	22.09	47.63	2.05	250	1.88	6.59	2.04	6.75	8.63	10.6	8.9
27.84	3783.28	4.65	22.44	47.41	2.10	250	1.93	6.58	2.05	6.70	8.63	10.6	8.9
28.61	3371.00	5.26	22.13	40.23	2.00	250	1.59	6.85	2.07	7.33	8.92	6.9	5.3
29.0942*	3371.00	5.22	22.34	40.08	2.03	250	1.62	6.84	2.07	7.29	8.91	6.9	5.3
29.5785*	3371.00	5.17	22.66	39.87	2.07	250	1.65	6.82	2.08	7.25	8.90	6.9	5.3
30.0628*	3371.00	5.10	23.05	39.61	2.11	250	1.70	6.80	2.09	7.19	8.89	6.9	5.3
30.5471*	3371.00	5.02	23.59	39.28	2.18	250	1.77	6.79	2.10	7.12	8.89	6.9	5.3
31.0314*	3371.00	4.92	24.24	38.89	2.26	250	1.85	6.77	2.12	7.04	8.88	6.9	5.3
31.5157*	3371.00	4.79	25.12	38.38	2.37	250	1.96	6.75	2.14	6.93	8.88	6.9	5.3
32.00	3371.00	4.65	26.21	37.79	2.50	250	2.10	6.75	2.16	6.81	8.91	6.9	5.3
32.4836*	3371.00	4.65	26.16	37.82	2.50	250	2.09	6.74	2.16	6.81	8.90	6.9	6.8
32.9673*	3371.00	4.66	26.12	37.84	2.49	250	2.08	6.74	2.16	6.82	8.90	6.9	6.8
33.4510*	3371.00	4.67	26.05	37.87	2.48	250	2.08	6.75	2.16	6.83	8.90	4.8	6.8
33.9347*	3371.00	4.68	25.98	37.91	2.48	250	2.07	6.75	2.16	6.84	8.90	4.8	6.8
34.4184*	3371.00	4.69	25.90	37.96	2.46	250	2.06	6.75	2.15	6.84	8.90	4.8	6.8
34.9021*	3371.00	4.70	25.78	38.02	2.45	250	2.04	6.74	2.15	6.85	8.89	4.8	6.8
35.3857*	3371.00	4.72	25.65	38.09	2.43	250	2.02	6.74	2.15	6.87	8.89	4.8	6.8
35.8694*	3371.00	4.74	25.49	38.17	2.41	250	2.00	6.74	2.15	6.89	8.89	4.8	6.8
36.3531*	3371.00	4.77	25.30	38.28	2.39	250	1.98	6.75	2.14	6.91	8.89	6.9	6.8
36.8368*	3371.00	4.80	25.06	38.41	2.36	250	1.95	6.75	2.14	6.94	8.88	6.9	6.8
37.3205*	3371.00	4.85	24.78	38.57	2.33	250	1.91	6.76	2.13	6.98	8.89	6.9	5.7
37.8042*	3371.00	4.89	24.45	38.76	2.28	250	1.87	6.76	2.12	7.01	8.88	6.9	5.7
38.2878*	3371.00	4.95	24.03	39.01	2.23	250	1.82	6.77	2.11	7.06	8.88	6.9	5.7
38.7715*	3371.00	5.03	23.52	39.32	2.17	250	1.76	6.79	2.10	7.13	8.89	6.9	5.7
39.2552*	3371.00	5.13	22.90	39.71	2.10	250	1.68	6.81	2.09	7.22	8.90	6.9	5.7
39.7389*	3371.00	5.26	22.10	40.24	2.00	250	1.59	6.85	2.07	7.33	8.92	6.9	5.7
40.2226*	3371.00	5.44	21.07	40.98	1.88	250	1.47	6.91	2.04	7.48	8.95	6.9	5.7

TABLE #4 HYDRAULIC SUMMARY

River Sta	Q Total (cfs)	Depth (ft)	Vel Chnl (ft/s)	Top Width (ft)	Froude #	Radius (ft)	Super-elev (ft)	Req'd Dpth at curve (ft)	Freeboard Req'd (ft)	Min Dpth w/ Frbd (ft)	Min Dpth w/ Frbd & Super (ft)	Act Dpth LT	Act Dpth RT
40.7063*	3371.00	5.71	19.74	42.02	1.73				2.01	7.72	2.01	7.7	7.7
41.19	3371.00	6.13	17.83	43.73	1.51				1.97	8.10	1.97	7.7	7.7
41.57	3371.00	3.89	21.64	40.00	1.93				1.99	5.88	1.99	7.7	7.7
41.64	2946.65	4.60	20.57	31.17	1.69				2.00	6.60	2.00	7.7	7.7
42.00	Bridge								1.40	1.40	1.40	7.7	7.7
42.40	2946.65	3.89	24.33	31.17	2.18	250	1.49	5.38	2.07	5.96	7.45	7.7	7.7
42.86	2946.65	4.62	23.13	37.67	2.22	250	1.63	6.25	2.07	6.69	8.32	4.9	6.4
43.26*	2946.65	4.69	22.61	37.97	2.15	250	1.57	6.26	2.06	6.75	8.32	4.9	6.4
43.66*	2946.65	4.79	21.96	38.38	2.07	250	1.49	6.28	2.04	6.83	8.33	4.9	6.4
44.06	2946.65	4.92	21.18	38.89	1.97	250	1.41	6.33	2.03	6.95	8.36	4.9	6.4
44.5241*	2946.65	4.91	21.21	38.87	1.98	250	1.41	6.32	2.03	6.94	8.35	4.9	6.4
44.9883*	2946.65	4.91	21.27	38.83	1.98	250	1.42	6.33	2.03	6.94	8.36	4.9	6.4
45.4525*	2946.65	4.90	21.34	38.78	1.99	250	1.43	6.33	2.03	6.93	8.36	4.9	6.4
45.9166*	2946.65	4.88	21.46	38.70	2.01	250	1.44	6.32	2.03	6.91	8.35	6.3	6.4
46.3808*	2946.65	4.84	21.66	38.57	2.03	250	1.46	6.30	2.04	6.88	8.34	6.3	4.8
46.845*	2946.65	4.80	21.90	38.42	2.06	250	1.49	6.29	2.04	6.84	8.33	6.3	4.8
47.3091*	2946.65	4.75	22.22	38.22	2.10	250	1.52	6.27	2.05	6.80	8.32	6.3	4.8
47.7733*	2946.65	4.68	22.67	37.94	2.16	250	1.57	6.25	2.06	6.74	8.31	6.3	4.8
48.2375*	2946.65	4.59	23.25	37.60	2.23	250	1.64	6.23	2.07	6.66	8.30	6.3	4.8
48.7016*	2946.65	4.49	23.98	37.18	2.32	250	1.73	6.22	2.09	6.58	8.31	6.3	4.8
49.1658*	2946.65	4.37	24.95	36.66	2.45	250	1.84	6.21	2.11	6.48	8.32	6.3	4.8
49.63	2946.65	4.21	26.21	36.04	2.62	250	2.00	6.21	2.14	6.35	8.35	6.3	4.8
50.1176*	2946.65	4.21	26.19	36.05	2.61	250	2.00	6.21	2.14	6.35	8.34	6.3	4.8
50.6052*	2946.65	4.21	26.17	36.06	2.61	250	1.99	6.20	2.14	6.35	8.34	6.3	4.8
51.0928*	2946.65	4.22	26.15	36.07	2.61	500	1.00	5.22	2.14	6.36	7.35	6.3	5.3
51.5804*	2946.65	4.22	26.12	36.08	2.60	500	0.99	5.21	2.14	6.36	7.35	6.3	5.3
52.0680*	2946.65	4.23	26.08	36.10	2.60	500	0.99	5.22	2.13	6.36	7.36	4.3	5.3
52.5557*	2946.65	4.23	26.04	36.12	2.59	500	0.99	5.22	2.13	6.36	7.35	4.3	5.3
53.0433*	2946.65	4.23	26.00	36.14	2.59	500	0.99	5.22	2.13	6.36	7.35	4.3	5.3
53.5309*	2946.65	4.24	25.92	36.18	2.58	500	0.98	5.22	2.13	6.37	7.35	4.3	5.3
54.0185*	2946.65	4.25	25.85	36.21	2.57	500	0.98	5.23	2.13	6.38	7.36	4.3	5.3
54.5061*	2946.65	4.27	25.75	36.26	2.55	500	0.97	5.24	2.13	6.40	7.37	4.3	5.3
54.9938*	2946.65	4.28	25.62	36.33	2.54	500	0.96	5.24	2.12	6.40	7.37	4.8	5.3
55.4814*	2946.65	4.30	25.48	36.40	2.52	1000	0.48	4.78	2.12	6.42	6.90	4.8	5.3
55.9690*	2946.65	4.32	25.30	36.48	2.50	1000	0.47	4.79	2.12	6.44	6.91	4.8	4.4
56.4566*	2946.65	4.35	25.08	36.60	2.47	1000	0.46	4.81	2.11	6.46	6.93	4.8	4.4

TABLE #4 HYDRAULIC SUMMARY

River Sta	Q Total (cfs)	Depth (ft)	Vel Chnl (ft/s)	Top Width (ft)	Froude #	Radius (ft)	Super-elev (ft)	Req'd Dpth at curve (ft)	Freeboard Req'd (ft)	Min Dpth w/ Frbd (ft)	Min Dpth w/ Frbd & Super (ft)	Act Dpth LT	Act Dpth RT
56.9442*	2946.65	4.38	24.81	36.74	2.43	1000	0.46	4.84	2.11	6.49	6.94	4.8	4.4
57.4319*	2946.65	4.43	24.48	36.91	2.39	1000	0.45	4.88	2.10	6.53	6.98	4.8	4.4
57.9195*	2946.65	4.48	24.05	37.14	2.33				2.09	6.57	2.09	4.8	4.8
58.4071*	2946.65	4.56	23.54	37.43	2.27				2.08	6.64	2.08	4.8	4.8
58.8947*	2946.65	4.65	22.89	37.80	2.19				2.07	6.72	2.07	4.8	4.8
59.3823*	2946.65	4.78	22.05	38.32	2.08				2.05	6.83	2.05	4.8	4.8
59.87	2946.65	4.96	20.98	39.02	1.95				2.02	6.98	2.02	4.8	4.8
60.42	2656.83	3.94	21.65	31.17	1.92				2.00	5.94	2.00	4.8	4.8
61.00	Bridge	0.00	0.00	0.00	0.00				1.40	1.40	1.40	4.8	4.8
61.73	2656.83	4.44	19.18	31.17	1.54				1.95	6.39	1.95	4.8	4.8
62.01*	2656.83	4.89	17.90	35.79	1.55				1.93	6.82	1.93	6.5	6.5
62.29	2656.83	5.54	16.21	41.35	1.44				1.90	7.44	1.90	5.6	5.6
62.7828*	2656.83	5.53	16.23	41.34	1.44				1.90	7.43	1.90	5.6	5.6
63.2757*	2656.83	5.53	16.25	41.32	1.44				1.90	7.43	1.90	5.6	5.6
63.7685*	2656.83	5.54	16.20	41.36	1.43				1.90	7.44	1.90	5.6	5.6
64.2614*	2656.83	5.54	16.19	41.38	1.43				1.90	7.44	1.90	5.6	5.6
64.7542*	2656.83	5.54	16.21	41.36	1.44				1.90	7.44	1.90	5.6	5.6
65.2471*	2656.83	5.53	16.23	41.34	1.44	500	0.44	5.97	1.90	7.43	7.87	6.0	5.6
65.7399*	2656.83	5.53	16.25	41.32	1.44	500	0.44	5.97	1.90	7.43	7.87	6.0	5.6
66.2328*	2656.83	5.54	16.20	41.37	1.43	500	0.44	5.98	1.90	7.44	7.88	6.0	5.6
66.7257*	2656.83	5.54	16.19	41.38	1.43				1.90	7.44	1.90	5.6	5.6
67.2185*	2656.83	5.55	16.17	41.40	1.43				1.90	7.45	1.90	5.6	5.6
67.7114*	2656.83	5.56	16.14	41.42	1.43				1.90	7.46	1.90	5.6	5.6
68.2042*	2656.83	5.56	16.11	41.46	1.42				1.90	7.46	1.90	5.6	5.6
68.6971*	2656.83	5.58	16.06	41.51	1.42				1.90	7.48	1.90	5.6	5.6
69.19*	2656.83	5.60	15.96	41.61	1.41				1.89	7.49	1.89	5.6	5.6
69.6828*	2656.83	5.63	15.87	41.70	1.40				1.89	7.52	1.89	5.7	5.7
70.1757*	2656.83	5.65	15.75	41.81	1.38				1.89	7.54	1.89	5.7	5.7
70.6685*	2656.83	5.69	15.62	41.95	1.37				1.89	7.58	1.89	5.7	5.7
71.1614*	2656.83	5.74	15.41	42.17	1.34	500	0.40	6.14	1.88	7.62	8.02	6.3	6.3
71.6542*	2656.83	5.83	15.10	42.51	1.31	500	0.39	6.22	1.87	7.70	8.09	6.3	6.3
72.1471*	2656.83	5.93	14.74	42.91	1.27	500	0.38	6.31	1.86	7.79	8.17	6.3	6.3
72.64	2656.83	6.10	14.15	43.60	1.20				1.85	7.95	1.85	6.3	6.3
73.00	2656.83	5.35	15.84	31.17	1.21				1.88	7.23	1.88	7.0	7.0
74.00	Bridge								1.40	1.40	1.40	7.0	7.0
76.50	2656.83	7.44	11.39	31.17	0.74				1.79	9.23	1.79	10.0	10.0

TABLE #4 HYDRAULIC SUMMARY

River Sta	Q Total (cfs)	Depth (ft)	Vel Chnl (ft/s)	Top Width (ft)	Froude #	Radius (ft)	Super-elev (ft)	Req'd Dpth at curve (ft)	Freeboard Req'd (ft)	Min Dpth w/ Frbd (ft)	Min Dpth w/ Frbd & Super (ft)	Act Dpth LT	Act Dpth RT
77.*	2656.83	8.02	8.53	46.58	0.58				1.70	9.72	1.70	10.0	10.0
77.50	2656.83	7.88	7.70	60.33	0.57				1.67	9.55	1.67	10.0	10.0
77.92*	2656.83	7.40	8.41	58.38	0.64				1.68	9.08	1.68	10.0	10.0
78.34*	2656.83	6.88	9.30	56.30	0.73				1.71	8.59	1.71	10.0	10.0
78.76	2639.44	6.30	10.46	54.01	0.85				1.74	8.04	1.74	10.0	10.0
79.76	1474.43	3.68	15.96	33.81	1.70				1.83	5.51	1.83	10.0	10.0
80.26*	1474.43	3.77	15.61	34.01	1.65				1.82	5.59	1.82	10.0	10.0
80.76	1474.43	4.98	10.71	38.73	1.00				1.72	6.70	1.72	10.0	10.0

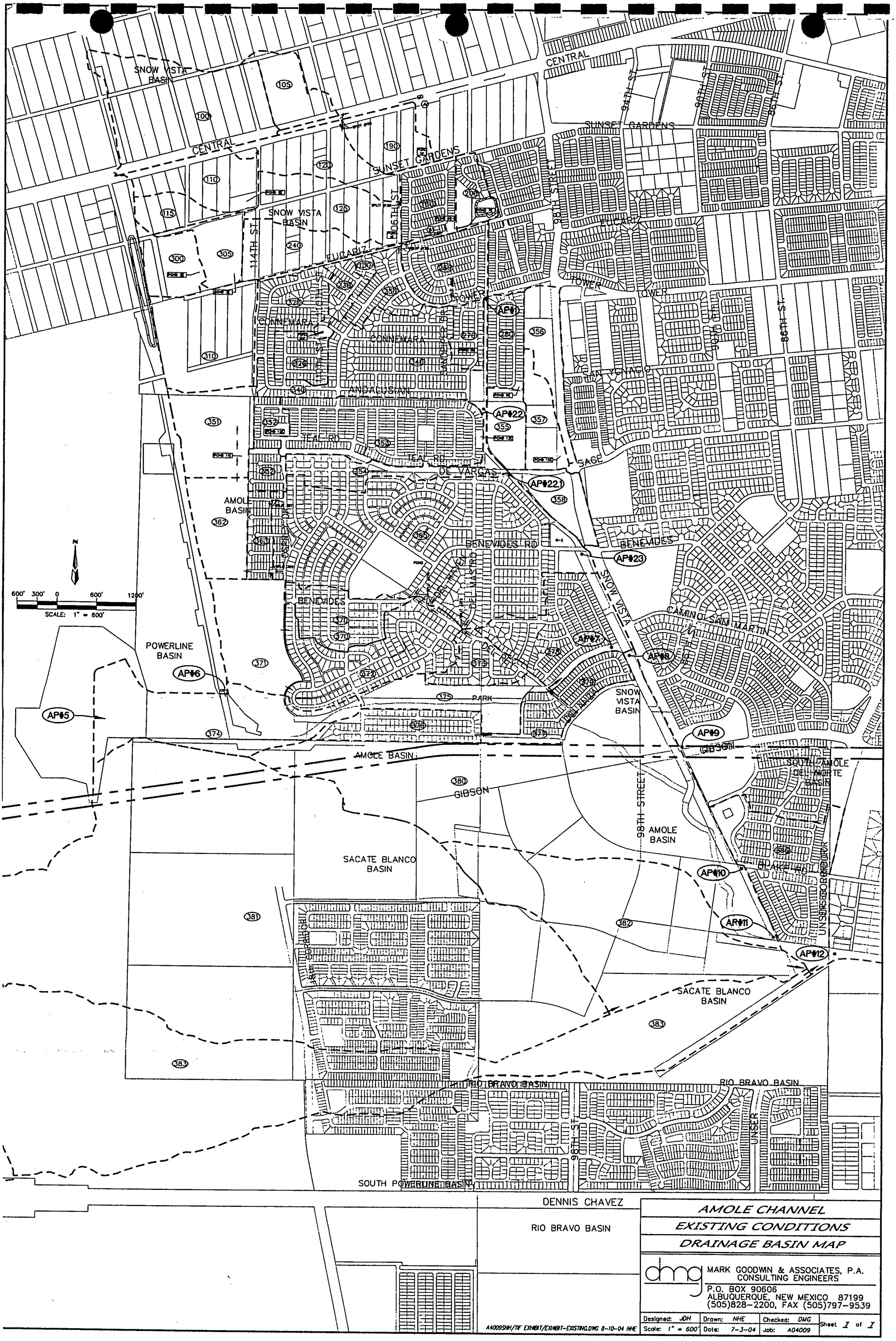

AMOLE CHANNEL
EXISTING CONDITIONS
DRAINAGE BASIN MAP

MARK GOODWIN & ASSOCIATES, P.A.
CONSULTING ENGINEERS
P.O. BOX 90606
ALBUQUERQUE, NEW MEXICO 87199
(505)828-2200, FAX (505)797-9539

Designed: JDH	Drawn: NHE	Checked: DMG	Sheet 1 of 1
Scale: 1" = 600'	Date: 7-3-04	Job: A04009	

A4009SNH/TIF EXHIBIT/EXHIBIT-EXISTING.DWG 8-10-04 NHE

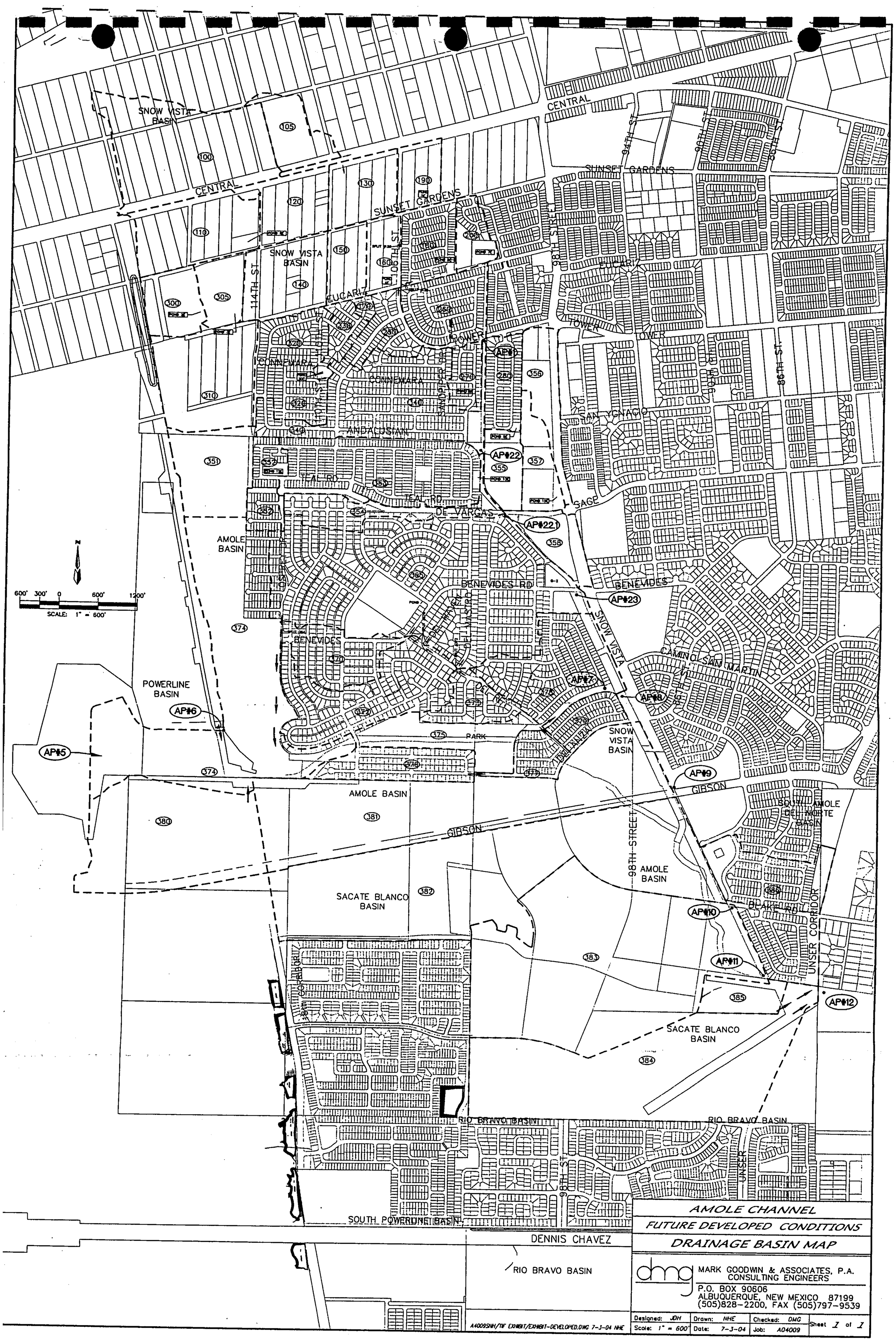

AMOLE CHANNEL
FUTURE DEVELOPED CONDITIONS
DRAINAGE BASIN MAP

MARK GOODWIN & ASSOCIATES, P.A.
CONSULTING ENGINEERS
P.O. BOX 90606
ALBUQUERQUE, NEW MEXICO 87199
(505)828-2200, FAX (505)797-9539

Designed: JDH	Drawn: NHE	Checked: DMG	Sheet 1 of 1
Scale: 1" = 600'	Date: 7-J-04	Job: A04009	

A4009SNH/TIF EXHIBIT/EXHIBIT-DEVELOPED.DWG 7-J-04 NHE

ALBUQUERQUE METROPOLITAN ARROYO FLOOD CONTROL AUTHORITY

CONSTRUCTION PLANS FOR

AMOLE CHANNEL PHASE I

FROM GIBSON BLVD. TO AMOLE BEND

ALBUQUERQUE, NEW MEXICO

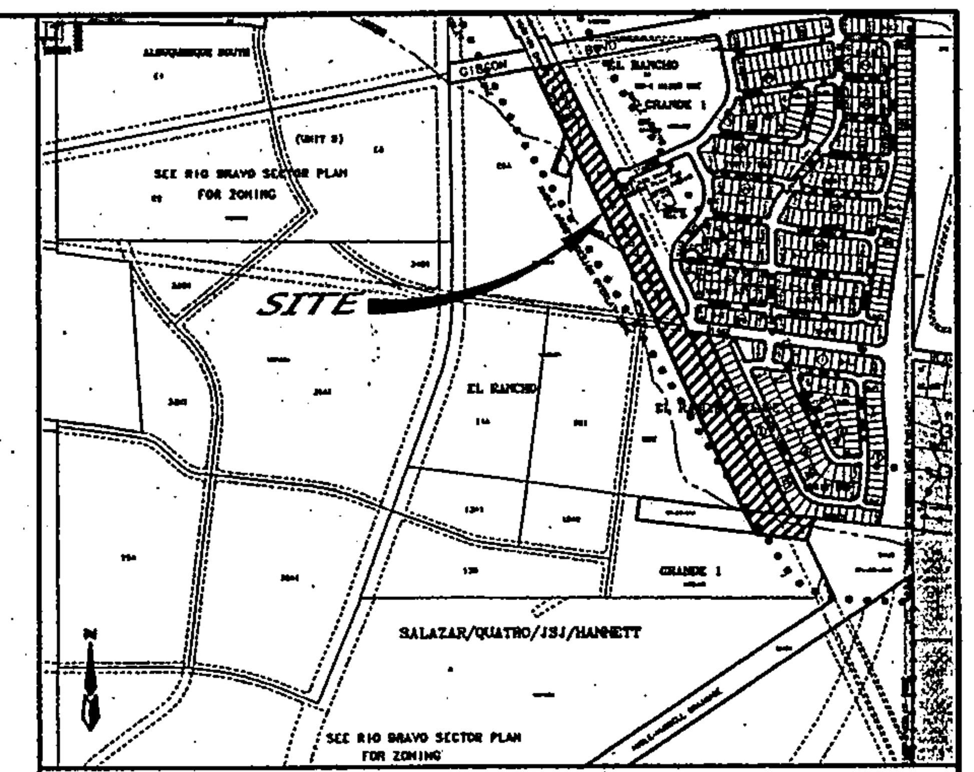

VICINITY MAP ZONE ATLAS N-9-Z

SCALE: NONE

GENERAL NOTES.

NOTICE TO CONTRACTORS

1. AN EXCAVATION/CONSTRUCTION PERMIT WILL BE REQUIRED BEFORE BEGINNING ANY WORK WITHIN THE CITY RIGHT-OF-WAY.
2. ALL WORK DETAILED ON THESE PLANS TO BE PERFORMED UNDER CONTRACT SHALL, EXCEPT AS OTHERWISE STATED OR PROVIDED FOR HEREON, BE CONSTRUCTED IN ACCORDANCE WITH THE THE NEW MEXICO STATE HIGHWAY AND TRANSPORTATION DEPARTMENT STANDARD SPECIFICATIONS FOR HIGHWAY AND BRIDGE CONSTRUCTION 1994 EDITION AND ALL WORK WITHIN CITY OF ALBUQUERQUE PUBLIC RIGHT OF WAY, EASEMENT AND PROPERTY SHALL BE PERFORMED IN ACCORDANCE WITH CITY OF ALBUQUERQUE STANDARDS AND SPECIFICATIONS FOR PUBLIC WORKS CONSTRUCTION, 1986 – UPDATE #7.
3. TWO WORKING DAYS PRIOR TO ANY EXCAVATION, THE CONTRACTOR MUST CONTACT NEW MEXICO ONE CALL SYSTEM (260-1990) FOR LOCATION OF EXISTING UTILITIES.
4. PRIOR TO CONSTRUCTION, THE CONTRACTOR SHALL EXCAVATE AND VERIFY THE HORIZONTAL AND VERTICAL LOCATIONS OF ALL OBSTRUCTIONS. SHOULD A CONFLICT EXIST, THE CONTRACTOR SHALL NOTIFY THE ENGINEER IMMEDIATELY SO THAT THE CONFLICT CAN BE RESOLVED WITH A MINIMUM AMOUNT OF DELAY.
5. FIVE (5) WORKING DAYS PRIOR TO BEGINNING OF CONSTRUCTION, THE CONTRACTOR SHALL SUBMIT TO CONSTRUCTION COORDINATION DIVISION A DETAILED CONSTRUCTION SCHEDULE. TWO (2) WORKING DAYS PRIOR TO THE START OF CONSTRUCTION, THE CONTRACTOR SHALL OBTAIN A BARRICADING PERMIT FROM THE CONSTRUCTION COORDINATION DIVISION. CONTRACTOR SHALL NOTIFY THE CONSTRUCTION COORDINATION ENGINEER (924-3400) PRIOR TO OCCUPYING AN INTERSECTION. REFER TO SECTION 19 OF THE GENERAL CONDITIONS OF THE STANDARD SPECIFICATIONS.
6. ALL WORK AFFECTING ARTERIAL ROADWAYS REQUIRES TWENTY-FOUR HOUR CONSTRUCTION.
7. ALL STREET STRIPING ALTERED OR DESTROYED SHALL BE REPLACED WITH PLASTIC REFLECTORIZED PAVEMENT MARKING BY CONTRACTOR TO THE SAME LOCATION AS WAS EXISTING, OR AS INDICATED BY THIS PLAN SET.
8. CONTRACTOR SHALL NOTIFY THE ENGINEER NOT LESS THAN SEVEN (7) DAYS PRIOR TO STARTING WORK IN ORDER THAT THE CITY SURVEYOR MAY TAKE NECESSARY MEASURES TO INSURE THE PRESERVATION OF SURVEY MONUMENTS. CONTRACTOR SHALL NOT DISTURB PERMANENT SURVEY MONUMENTS WITHOUT THE CONSENT OF THE CITY SURVEYOR AND SHALL NOTIFY THE CITY SURVEYOR AND BEAR THE EXPENSE OF REPLACING ANY THAT MAY BE DISTURBED WITHOUT PERMISSION. REPLACEMENT SHALL BE DONE ONLY BY THE CITY SURVEYOR. WHEN A CHANGE IS MADE IN THE FINISHED ELEVATIONS OF THE PAVEMENT OF ANY ROADWAY IN WHICH A PERMANENT SURVEY MONUMENT IS LOCATED, CONTRACTOR SHALL, AT HIS OWN EXPENSE, ADJUST THE MONUMENT TO COVER THE NEW GRADE UNLESS OTHERWISE SPECIFIED. REFER TO SECTION 4.4 OF THE GENERAL CONDITIONS OF THE STANDARD SPECIFICATIONS.

CONTRACTOR SHALL RECORD DATA ON ALL UTILITY LINES AND ACCESSORIES AS REQUIRED BY THE CITY OF ALBUQUERQUE FOR THE PREPARATION OF "AS CONSTRUCTED" DRAWINGS. CONTRACTOR SHALL NOT COVER UTILITY LINES AND ACCESSORIES UNTIL ALL DATA HAVE BEEN RECORDED.

10. CONTRACTOR SHALL MAINTAIN A GRAFFITI-FREE WORK SITE. CONTRACTOR SHALL PROMPTLY REMOVE ANY GRAFFITI FROM ALL EQUIPMENT, WHETHER PERMANENT OR TEMPORARY.
11. CONTRACTOR SHALL COORDINATE WITH THE CITY OF ALBUQUERQUE WATER SYSTEMS DIVISION (857-8200) SEVEN (7) WORKING DAYS IN ADVANCE OF ANY WORK THAT MAY AFFECT EXISTING PUBLIC WATER OR SEWER UTILITIES. EXISTING VALVES TO BE OPERATED BY CITY PERSONNEL ONLY. CONTRACTOR SHALL CONTACT THE WATER SYSTEMS DIVISION SEVEN (7) WORKING DAYS PRIOR TO NEEDING VALVES TURNED ON OR OFF.
12. FOR STORM DRAIN CONSTRUCTION, RCP JOINTS SHALL NOT BE GROUTED PRIOR TO FINAL INSPECTION. FINAL INSPECTION WILL DETERMINE JOINTS TO BE GROUTED FOR FINAL ACCEPTANCE OF THE CONSTRUCTION.

NOTES

1. AMAFCA FIELD ENGINEER SHALL BE NOTIFIED 48-HOURS PRIOR TO ANY WORK WITHIN THE AMAFCA R/W. TEL 884-2215 JERRY LOVATO.
2. NO WORK WILL BE PERFORMED IN THE AMAFCA R/W BETWEEN MAY 15 AND OCTOBER 15 WITHOUT WRITTEN PERMISSION FROM AMAFCA.
3. ALL SUBGRADE, BACKFILL AND EMBANKMENT SHALL BE COMPACTED TO 95% (MODIFIED PROCTOR) WITHIN AMAFCA R/W. TESTING REPORTS SHALL BE PROVIDED TO AMAFCA FIELD ENGINEER.
4. AMAFCA FIELD ENGINEER WILL BE NOTIFIED 48-HOURS PRIOR TO FINAL INSPECTION OF ANY FACILITIES WITHIN THE AMAFCA R/W.
5. ALL DISTURBED GROUND AREAS SHALL BE REVEGETATED IN ACCORDANCE WITH CITY OF ALBUQUERQUE STANDARD SPECIFICATIONS FOR PUBLIC WORKS CONSTRUCTION, SECTION-1012 NATIVE GRASS SEEDING, AS CURRENTLY UPDATED.

APPROVED FOR CONSTRUCTION WITHIN AMAFCA RIGHT-OF-WAY

FOR AMAFCA — 3-24-05 DATE

INDEX TO DRAWINGS

SHEET NO.	SHEET
1	INDEX OF SHEETS
2	MASTER PLAN
3-4	TYPICAL SECTIONS & TEMP TRANSITION DETAIL
5-7	CHANNEL PLAN & PROFILE (PHASE I)
8-10	STRUCTURAL DETAILS (PHASE I)
11-12	WATERLINE IMPROVEMENTS PLAN & PROFILE (BLAKE RD.)
13	WATER CROSSING DETAILS
14	NEW MEXICO STATE HIGHWAY & TRANSPORTATION DEPT. – GENERAL INFORMATION
15	NEW MEXICO STATE HIGHWAY & TRANSPORTATION DEPT. – TRIPLE CONCRETE BOX CULVERT DESIGN
16	NEW MEXICO STATE HIGHWAY & TRANSPORTATION DEPT. – TRIPLE CONCRETE BOX CULVERT 30° SKEW
17-20	CHANNEL CROSS SECTIONS

CERTIFICATE OF SUBSTANTIAL COMPLIANCE ON PLANS

I, James D. Hughes, NMPE 11674, of the firm Mark Goodwin & Associates, PA, a Registered Professional Engineer in the State of New Mexico, do hereby certify, to the best of my knowledge and belief, that the infrastructure installed as part of this project has been inspected by me or by a qualified person under my direct supervision, and has been constructed in accordance with the plans and specifications approved by the City Engineer and that the original design intent of the approved plans has been met, except as noted by me on the as-built construction drawings. This Certification is based on site inspections by me or personnel under my direction, and survey information provided by ALS, Inc., NMPS number 7719.

James D. Hughes NMPE 11674 — 2-12-07

SURVEYOR'S CERTIFICATION

"I, Timothy Aldrich, a duly qualified Registered Professional Land Surveyor under the laws of the State of New Mexico, do hereby certify that the 'as-built' information shown on these drawings was obtained from field construction and 'as-built' surveys performed by me or under my supervision, that the 'as-built' information shown on these drawings was added by me or under my supervision, and that this 'as-built' information is true and correct to the best of my knowledge and belief." Aldrich Land Surveying is not responsible for any of the design concepts, calculations, engineering, or intent of the record drawings.

Timothy Aldrich, P.S. No. 7719 — 7-5-06 Date

REFERENCES:

- CLOMR REQUEST FOR AMOLE CHANNEL PHASES I, II & III FROM CONFLUENCE OF SNOW VISTA DOWN TO AMOLE DETENTION BASIN DEC. 2004 BY MARK GOODWIN & ASSOC.
- TRACTS 29, 30 & 31 AT ARROWOOD DMP OCT. 11, 2004 BY WILSON & CO.
- GIBSON BLVD. DRAINAGE PLAN NOV. 21, 2003 BY BOHANNAN-HOUSTON INC.
- CLOMR REQUEST FOR AMOLE ARROYO NOV. 2003 BY NOV. 2003 BY ISAACSON & ARFMAN
- AMOLE-HUBBEL DMP JULY 22, 1999 BY LEEDSHILL-HERKENHOFF, INC.

CAUTION:
NOTE THAT ALL EXISTING UTILITIES MAY NOT BE SHOWN. ALL EXISTING SERVICE CONNECTIONS ARE NOT SHOWN. ANY EXISTING UTILITIES THAT ARE SHOWN ARE APPROXIMATE LOCATION ONLY. IT SHALL BE THE SOLE RESPONSIBILITY OF THE CONTRACTOR TO CONTACT ALL THE UTILITY OWNERS AND TO CONDUCT ALL NECESSARY FIELD INVESTIGATIONS PRIOR TO ANY EXCAVATIONS TO DETERMINE THE ACTUAL LOCATION OF UTILITIES AND OTHER IMPROVEMENTS.

DRB NO. 1003571

D. MARK GOODWIN & ASSOCIATES, P.A. CONSULTING ENGINEERS
P. O. BOX 90606
ALBUQUERQUE, NEW MEXICO 87199
(505) 828-2200, FAX (505) 797-9539

THE FOLLOWING NOTES ALSO APPLY WHEN CHECKED

☑ ALL STORM DRAINAGE FACILITIES SHALL BE COMPLETED PRIOR TO FINAL ACCEPTANCE.

REV.	SHEETS	CITY ENGINEER	DATE	USER DEPARTMENT	DATE	USER DEPARTMENT	DATE
2	6 & 7			AMAFCA	12-12-05		
1	5,6,&7		11-16-05	AMAFCA	11-8-05		

ENGINEERS STAMP & SIGNATURE — 3-7-05

APPROVALS	ENGINEER	DATE
DRC CHAIRMAN		06-29-05
TRANSPORTATION		3/1/05
WATER/WASTEWATER		3/17/05
HYDROLOGY	Bradley L. Bingham	3/17/05
CIP		
CONSTR. MNGMT.		
CONSTR. COORD.		06-29-05

APPROVED FOR CONSTRUCTION

CITY ENGINEER — 7-22-05 DATE

CITY PROJECT NO. 679482

SHEET 1 OF 20

A04jobs\A4009SNH\Amole Channel Plans\Phase1\4009-ph1-Title.dwg\03-02-05\DER NHE JCC

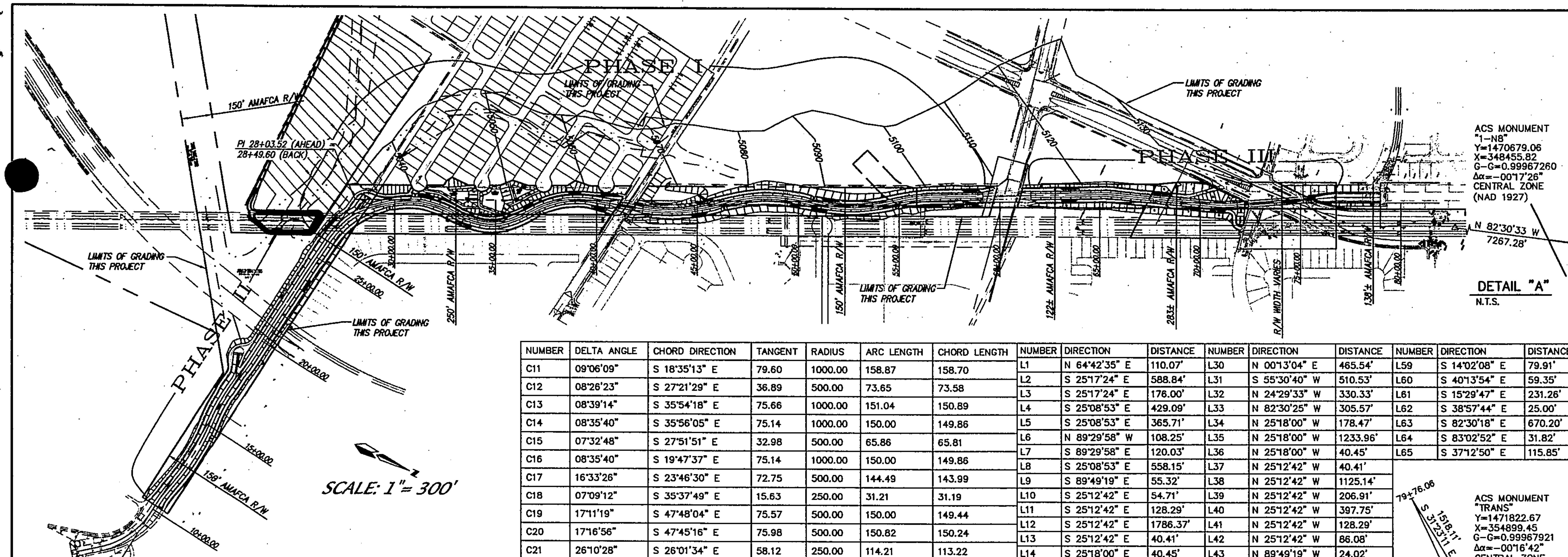

SCALE: 1"= 300'

ACS MONUMENT
"1-N8"
Y=1470679.06
X=348455.82
G-G=0.99967260
Δα=-00°17'26"
CENTRAL ZONE
(NAD 1927)

N 82°30'33 W
7267.28'

DETAIL "A"
N.T.S.

NUMBER	DELTA ANGLE	CHORD DIRECTION	TANGENT	RADIUS	ARC LENGTH	CHORD LENGTH
C1	90°00'01"	S 70°17'25" E	25.00	25.00	39.27	35.36
C2	115°38'55"	S 32°40'35" W	39.74	25.00	50.46	42.32
C3	64°21'05"	S 57°19'25" E	15.73	25.00	28.08	26.63
C4	26°01'10"	N 12°16'49" W	170.51	738.00	335.14	332.27
C5	10°11'12"	S 24°50'56" E	44.57	500.00	88.90	88.78
C6	06°32'27"	S 23°01'33" E	28.57	500.00	57.08	57.05
C7	11°59'07"	S 32°17'20" E	104.97	1000.00	209.18	208.80
C8	08°35'40"	S 33°59'04" E	75.14	1000.00	150.00	149.86
C9	07°03'26"	S 26°09'31" E	30.83	500.00	61.59	61.55
C10	08°35'40"	S 18°19'58" E	75.14	1000.00	150.00	149.86
C11	09°06'09"	S 18°35'13" E	79.60	1000.00	158.87	158.70
C12	08°26'23"	S 27°21'29" E	36.89	500.00	73.65	73.58
C13	08°39'14"	S 35°54'18" E	75.66	1000.00	151.04	150.89
C14	08°35'40"	S 35°56'05" E	75.14	1000.00	150.00	149.86
C15	07°32'48"	S 27°51'51" E	32.98	500.00	65.86	65.81
C16	08°35'40"	S 19°47'37" E	75.14	1000.00	150.00	149.86
C17	16°33'26"	S 23°46'30" E	72.75	500.00	144.49	143.99
C18	07°09'12"	S 35°37'49" E	15.63	250.00	31.21	31.19
C19	17°11'19"	S 47°48'04" E	75.57	500.00	150.00	149.44
C20	17°16'56"	S 47°45'16" E	75.98	500.00	150.82	150.24
C21	26°10'28"	S 26°01'34" E	58.12	250.00	114.21	113.22
C22	17°16'56"	S 04°17'52" E	75.98	500.00	150.82	150.24
C23	17°11'19"	S 04°15'04" E	75.57	500.00	150.00	149.44
C24	09°10'02"	S 17°25'45" E	20.04	250.00	40.00	39.96
C25	17°11'19"	S 30°36'26" E	75.57	500.00	150.00	149.44
C26	17°11'19"	S 47°33'23" E	75.57	500.00	150.00	149.44
C27	09°10'02"	S 60°44'04" E	20.04	250.00	40.00	39.96
C28	17°29'37"	S 74°03'54" E	76.93	500.00	152.66	152.07
C29	06°20'36"	S 79°20'00" E	55.41	1000.00	110.71	110.65
C30	17°08'20"	S 84°43'52" E	150.69	1000.00	299.13	298.01
C31	19°31'19"	S 83°32'22" E	172.03	1000.00	340.72	339.07
C32	08°32'26"	S 78°02'56" E	74.67	1000.00	149.06	148.92
C33	46°40'31"	S 59°42'36" E	170.80	395.89	322.50	313.66

NUMBER	DIRECTION	DISTANCE	NUMBER	DIRECTION	DISTANCE	NUMBER	DIRECTION	DISTANCE
L1	N 64°42'35" E	110.07'	L30	N 00°13'04" E	465.54'	L59	S 14°02'08" E	79.91'
L2	S 25°17'24" E	588.84'	L31	S 55°30'40" W	510.53'	L60	S 40°13'54" E	59.35'
L3	S 25°17'24" E	176.00'	L32	N 24°29'33" W	330.33'	L61	S 15°29'47" E	231.26'
L4	S 25°08'53" E	429.09'	L33	N 82°30'25" W	305.57'	L62	S 38°57'44" E	25.00'
L5	S 25°08'53" E	365.71'	L34	N 25°18'00" W	178.47'	L63	S 82°30'18" E	670.20'
L6	N 89°29'58" W	108.25'	L35	N 25°18'00" W	1233.96'	L64	S 83°02'52" E	31.82'
L7	S 89°29'58" E	120.03'	L36	N 25°18'00" W	40.45'	L65	S 37°12'50" E	115.85'
L8	S 25°08'53" E	558.15'	L37	N 25°12'42" W	40.41'			
L9	S 89°49'19" E	55.32'	L38	N 25°12'42" W	1125.14'			
L10	S 25°12'42" E	54.71'	L39	N 25°12'42" W	206.91'			
L11	S 25°12'42" E	128.29'	L40	N 25°12'42" W	397.75'			
L12	S 25°12'42" E	1786.37'	L41	N 25°12'42" W	128.29'			
L13	S 25°12'42" E	40.41'	L42	N 25°12'42" W	86.08'			
L14	S 25°18'00" E	40.45'	L43	N 89°49'19" W	24.02'			
L15	S 82°29'47" E	178.28'	L44	N 25°12'33" W	575.00'			
L16	S 82°29'47" E	178.28'	L45	N 79°39'10" E	155.17'			
L17	S 82°29'47" E	178.46'	L46	N 79°39'10" E	155.17'			
L18	S 82°29'47" E	118.97'	L47	N 31°24'01" W	101.28'			
L19	S 25°18'00" E	1233.91'	L48	N 25°16'00" W	130.18'			
L20	S 82°30'18" E	496.28'	L49	N 00°47'58" W	228.19'			
L21	S 82°28'03" E	248.65'	L50	N 60°03'28" E	39.74'			
L22	S 82°29'02" E	825.90'	L51	S 00°43'46" W	137.49'			
L23	S 81°47'06" E	247.35'	L52	N 25°16'00" W	368.67'			
L24	S 82°29'16" E	374.79'	L53	N 25°16'00" W	1061.14'			
L25	S 89°23'07" W	250.88'	L54	S 25°18'00" E	226.29'			
L26	S 00°26'42" W	199.75'	L55	S 29°56'32" E	428.58'			
L27	S 00°24'08" W	376.01'	L56	S 19°45'19" E	279.60'			
L28	N 88°39'11" W	200.26'	L57	S 26°17'47" E	810.89'			
L29	S 89°58'59" W	705.91'	L58	S 38°16'54" E	40.40'			

79+76.06
S 31°23'11 E
1518.11'

ACS MONUMENT
"TRANS"
Y=1471822.67
X=354899.45
G-G=0.99967921
Δα=-00°16'42"
CENTRAL ZONE
(NAD 1927/SLD 1929)
ELEVATION=5118.37

DETAIL "B"
N.T.S.

ACS MONUMENT
"TRANS"
Y=1471822.67
X=354899.45
G-G=0.99967921
Δα=-00°16'42"
CENTRAL ZONE
(NAD 1927/SLD 1929)
ELEVATION=5118.37

N 43°29'50 W
5227.42'

DETAIL "C"
N.T.S.

EASEMENTS

1. EXISTING 10' PNM & MST&T EASEMENT (DOCUMENT NO. 80-23229) (4-18-80, Bk. Misc. 766, Pg. 745)
2. EXISTING C.O.A. BLANKET DRAINAGE EASEMENT ACROSS TRACT E (11-28-94, 94C-393)
3. EXISTING 124' PUBLIC ROADWAY, WATERLINE AND SANITARY SEWER EASEMENT (06-05-02, 02C-197)
4. EXISTING 156' PUBLIC ROADWAY, WATERLINE AND SANITARY SEWER EASEMENT (06-05-02, 02C-197)
5. EXISTING 34' PUBLIC ROADWAY, UTILITY & DRAINAGE EASEMENT (05-21-02, 02C-184)
6. EXISTING 34' PUBLIC ROADWAY, UTILITY & DRAINAGE EASEMENT (01-16-01, 2001C-20)
7. EXISTING 60' PUBLIC ROADWAY, UTILITY & DRAINAGE EASEMENT (05-21-02, 02C-184) (TO BE VACATED BY EL RANCHO GRANDE, UNIT 9B PLAT)
8. 60' BLAKE ROAD S.W., NO DEDICATION DOCUMENT AVAILABLE
9. 124' PUBLIC ROADWAY, WATERLINE AND SANITARY SEWER EASEMENT (08-15-03, 03C-248)
10. 60' PUBLIC ROADWAY, UTILITY & DRAINAGE EASEMENT (03-21-03, 03C-73)
11. EXISTING EASEMENTS TO ACCOMMODATE THE EXISTING 100 YEAR STORM FLOWS FOR AMAFCA DRAINAGE CONTROL. SUCH EASEMENTS ARE TO RUN WITH THE LAND BUT MAY BE MODIFIED, REMOVED, OR REPLACED AS NECESSARY AND MUTUALLY AGREED TO BY AMAFCA AND OWNER(S) PENDING FUTURE PLATTING SUBMITTALS WHICH CONFORM TO A MORE COMPLETE OR IMPROVED ROUTING OF THE DRAINAGE FACILITIES. (05-06-86, C30-91) (TO BE VACATED BY EL RANCHO GRANDE, UNIT 9B PLAT)
12. EXISTING 100' PNM EASEMENT (04-12-56, BK. D348, PG. 43)
13. EXISTING 150' AMAFCA AMOLE ARROYO DRAINAGE EASEMENT (05-21-02, 02C-184) (TO BE VACATED BY EL RANCHO GRANDE, UNIT 9B PLAT)
14. EXISTING 156' PUBLIC INGRESS/EGRESS, WATER AND SANITARY SEWER EASEMENT (04-04-02, BK. A34, PG. 4273)
15. EXISTING 10' PNM & MST&T EASEMENT (01-17-86, BK.MISC. 312A, PGS. 840 & 850)
16. EXISTING 50' ACCESS & UNDERGROUND WATERLINE EASEMENT (10-25-85, BK.MISC. 284A, PG. 668)
17. EXISTING 10' PNM & MST&T EASEMENT (01-17-86, BK.MISC. 81A, PGS. 881 & 882)
18. EXISTING 10' PNM OVERHEAD LINE EASEMENT (05-06-86, C30-91)
19. EASEMENT FROM CITY OF ALBUQUERQUE PARKS AND RECREATION TO AMAFCA ( )
20. TEMPORARY AMAFCA SLOPE EASEMENT FUTURE CONSTRUCTION OF SLOPES PER PHASE 3 PLANS
21. TEMPORARY AMAFCA SLOPE EASEMENT FUTURE CONSTRUCTION OF SLOPES PER PHASE 3 PLANS
22. EXISTING AMAFCA ACCESS EASEMENT (04-12-04, A75-7181)

TRACT LEGEND

1. TRACT 9-B-2-A TO BE DEDICATED TO AMAFCA ON EL RANCHO GRANDE I, UNIT 9B PLAT
2. TRACT A-1 TO BE DEDICATED TO AMAFCA ON EL RANCHO GRANDE I, UNIT 9B PLAT
3. PORTION OF R/W 1, TO BE QUITCLAIMED FROM AMAFCA TO CURB INC. AND RE-PLATED BY SEPERATE PLAT. (#1)
4. PORTION OF R/W 1, TO REMAIN AMAFCAS
5. BLAKE ROAD SW RIGHT-OF-WAY, TO BE DEDICATED TO THE CITY OF ALBUQUERQUE BY EL RANCHO GRANDE I, UNIT 9B PLAT, (NOTE) PORTION OF EASEMENT NO. 13 REMAINS

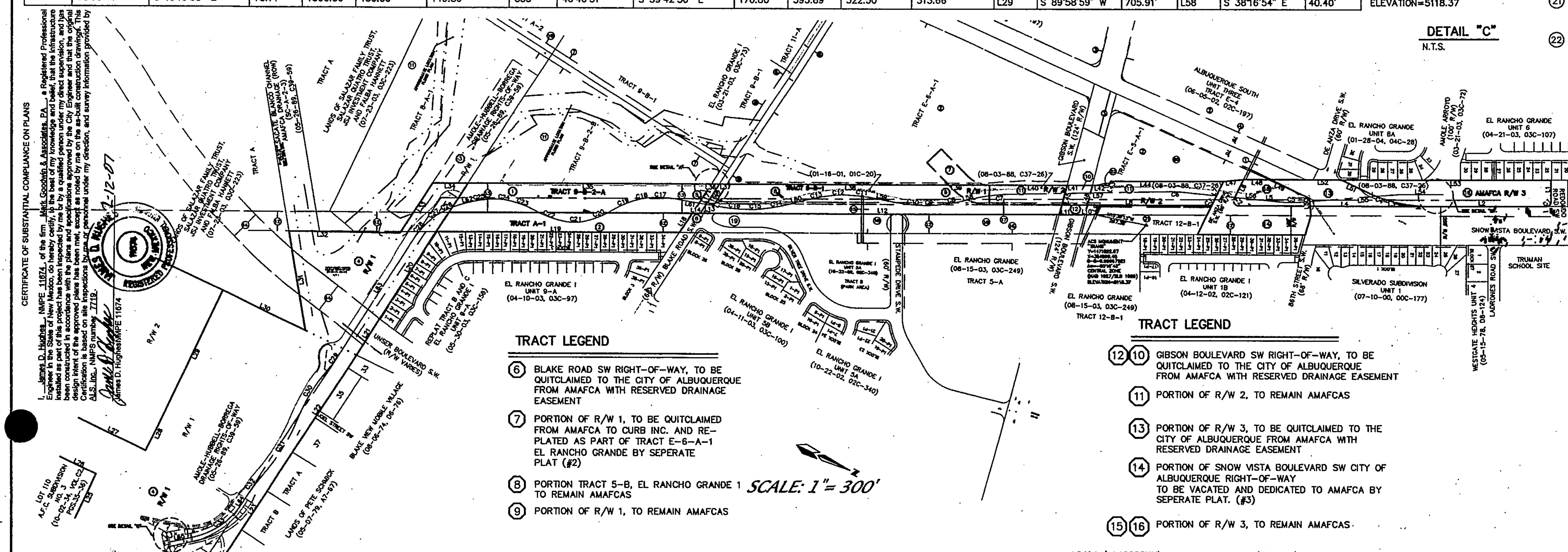

CERTIFICATE OF SUBSTANTIAL COMPLIANCE ON PLANS

I, James D. Hughes, NMPE 11674, of the firm Mark Goodwin & Associates, PA, a Registered Professional Engineer in the State of New Mexico, do hereby certify, to the best of my knowledge and belief, that the infrastructure installed as part of this project has been inspected by me or by a qualified person under my direct supervision, and has been constructed in accordance with the plans and specifications approved by the City Engineer and that the original design intent of the approved plans has been met, except as noted by me on the as-built construction drawings. This Certification is based on site inspections by me or personnel under my direction, and survey information provided by ALS, Inc., NMPS number 7719.

James D. Hughes NMPE 11674 2-12-07

TRACT LEGEND

6. BLAKE ROAD SW RIGHT-OF-WAY, TO BE QUITCLAIMED TO THE CITY OF ALBUQUERQUE FROM AMAFCA WITH RESERVED DRAINAGE EASEMENT
7. PORTION OF R/W 1, TO BE QUITCLAIMED FROM AMAFCA TO CURB INC. AND RE-PLATED AS PART OF TRACT E-6-A-1 EL RANCHO GRANDE BY SEPERATE PLAT (#2)
8. PORTION TRACT 5-B, EL RANCHO GRANDE 1 TO REMAIN AMAFCAS
9. PORTION OF R/W 1, TO REMAIN AMAFCAS

SCALE: 1"= 300'

TRACT LEGEND

(12)(10) GIBSON BOULEVARD SW RIGHT-OF-WAY, TO BE QUITCLAIMED TO THE CITY OF ALBUQUERQUE FROM AMAFCA WITH RESERVED DRAINAGE EASEMENT

(11) PORTION OF R/W 2, TO REMAIN AMAFCAS

(13) PORTION OF R/W 3, TO BE QUITCLAIMED TO THE CITY OF ALBUQUERQUE FROM AMAFCA WITH RESERVED DRAINAGE EASEMENT

(14) PORTION OF SNOW VISTA BOULEVARD SW CITY OF ALBUQUERQUE RIGHT-OF-WAY TO BE VACATED AND DEDICATED TO AMAFCA BY SEPERATE PLAT. (#3)

(15)(16) PORTION OF R/W 3, TO REMAIN AMAFCAS

A04jobs\A4009SNH\amole channel plans\Phase1\4009-Ph1-masterplan-r.dwg\03-02-05\DER NHE JCC

AS BUILT INFORMATION	
CONTRACTOR	
WORK STAKED BY	DATE
INSPECTOR'S ACCEPTANCE BY	DATE
FIELD VERIFICATION BY	DATE
DRAWINGS CORRECTED BY	DATE
MICRO-FILM INFORMATION	
RECORDED BY	DATE
NO.	

BENCH MARKS

STATION "TRANS" IS LOCATED 6 MI. SOUTHWEST OF DOWNTOWN ALBUQUERQUE IN THE R.O.W. OF A PLAINS ELECTRIC CO-OP TRANS-MISSION LINE. TO REACH STATION FROM INTERSECTION OF CENTRAL AVE. & 98TH ST. SW, GO SOUTH ON 98TH ST. 1.2 MI. TO JUNCTION WITH GIBSON BLVD. & SNOW VISTA BLVD., THEN SOUTHEAST ALONG SNOW VISTA AND CO-OP ELECTRIC TRANSMISSION LINE 0.85 MI. TO PYLON NUMBERED "52". STATION IS JUST EAST OF THIS POINT.
X = 354,899.45, Y = 1,471,822.67, ELEV. = 5118.37
(NAD 1927/SLD 1929)

SURVEY INFORMATION — FIELD NOTES

NO.	BY	DATE

ENGINEER'S SEAL: JAMES D. HUGHES, NEW MEXICO, 11674, REGISTERED PROFESSIONAL ENGINEER

NO.	DATE	REMARKS	BY

REVISIONS

DESIGN

DESIGNED BY	JDH	DATE	05/04
DRAWN BY	DER	DATE	05/04
CHECKED BY	DMG	DATE	05/04

dmg MARK GOODWIN & ASSOCIATES, P.A.
CONSULTING ENGINEERS
P.O. BOX 90606
ALBUQUERQUE, NEW MEXICO 87199
(505) 828-2200, FAX (505) 797-9539

ALBUQUERQUE METROPOLITAN
ARROYO FLOOD CONTROL AUTHORITY

TITLE: AMOLE CHANNEL (PHASE I)
AMOLE CHANNEL MASTER PLAN

DESIGN REVIEW COMMITTEE: APPROVED JUN 29 2005
CITY ENGINEER APPROVAL: APPROVED JUL 22 2005 CITY ENGINEER
LAST DESIGN UPDATE — MO./DAY/YR. — MO./DAY/YR.

CITY PROJECT NO.	ZONE MAP NO.	SHEET	OF
679482	N-9	2	20

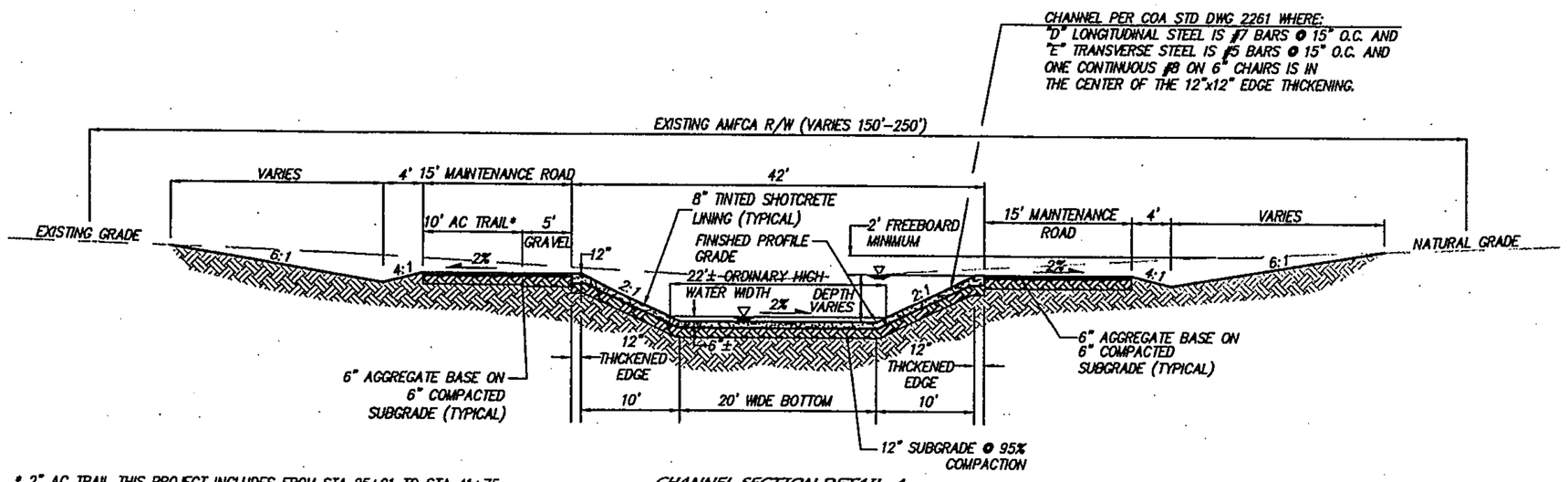

* 2" AC TRAIL THIS PROJECT INCLUDES FROM STA 25+91 TO STA 41+75
SEE SEPERATE PROJECT FOR ADDITIONAL TRAIL CONSTRUCTION.

CHANNEL SECTION DETAIL A

N.T.S. STATION 27+82 TO 36+00
STATION 40+66 TO 79+00

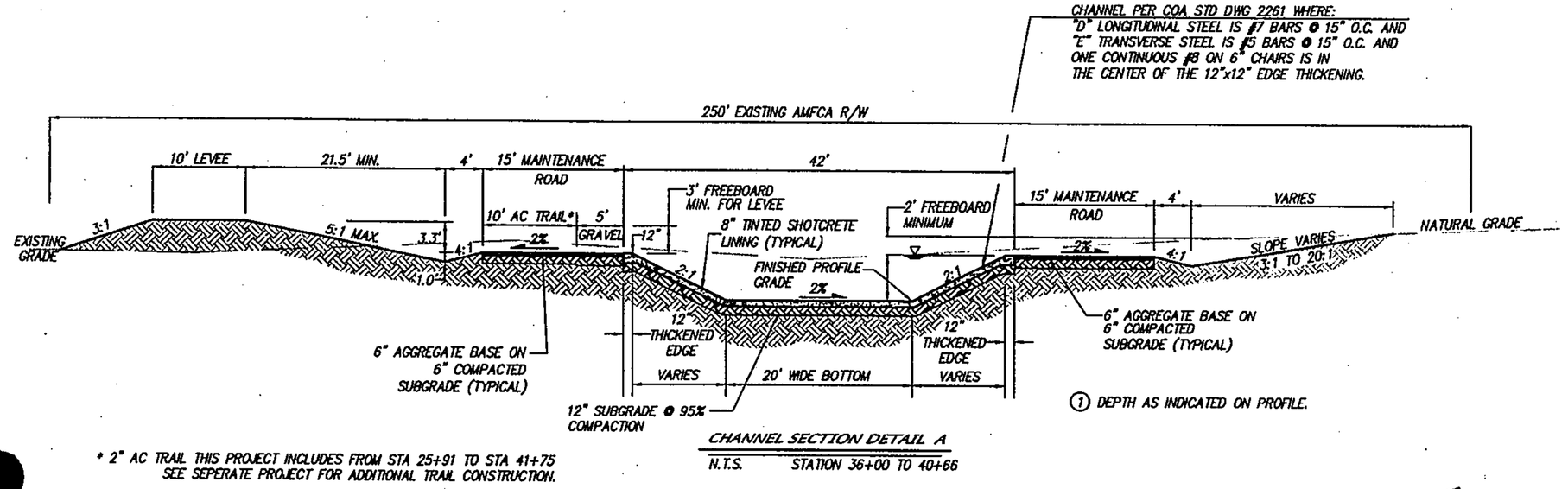

* 2" AC TRAIL THIS PROJECT INCLUDES FROM STA 25+91 TO STA 41+75
SEE SEPERATE PROJECT FOR ADDITIONAL TRAIL CONSTRUCTION.

CHANNEL SECTION DETAIL A

N.T.S. STATION 36+00 TO 40+66

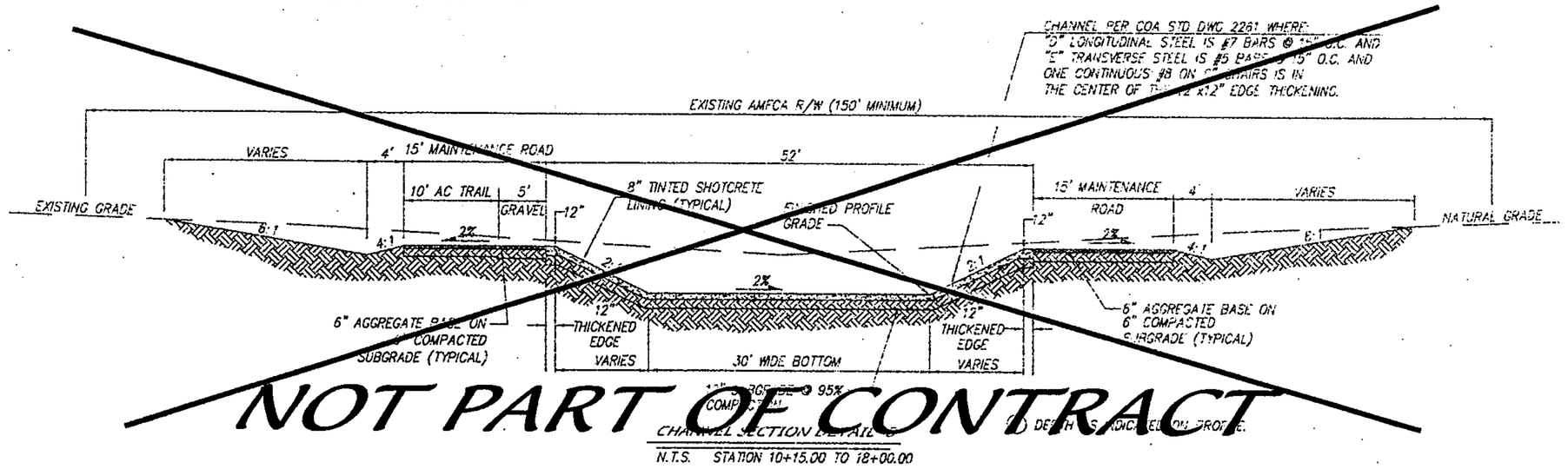

NOT PART OF CONTRACT

CHANNEL SECTION DETAIL B

N.T.S. STATION 10+15.00 TO 18+00.00

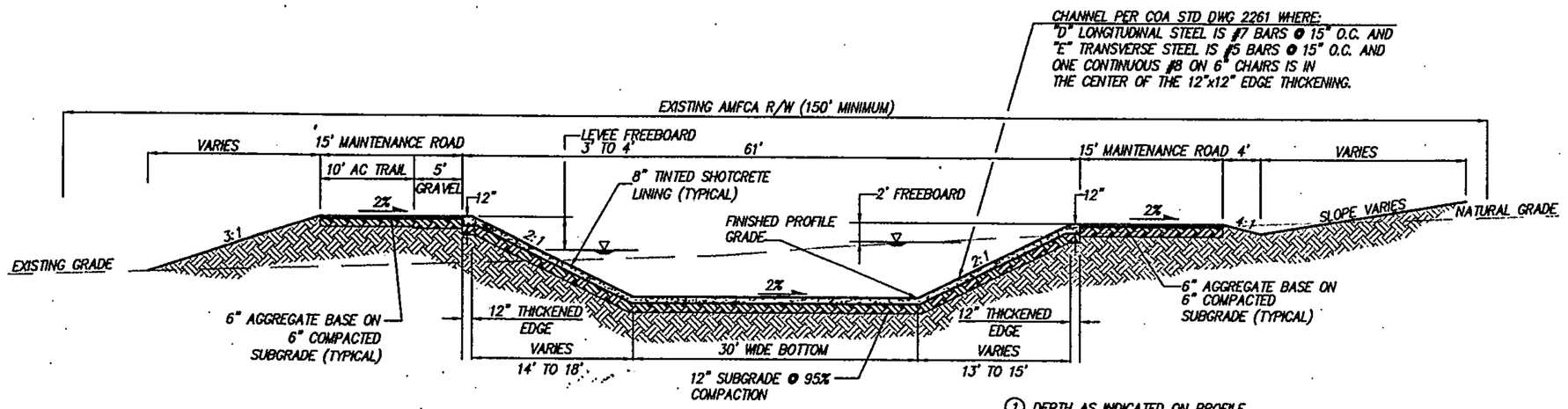

CHANNEL SECTION DETAIL C

N.T.S. STATION 18+00.00 TO 27+82.00

NOTES

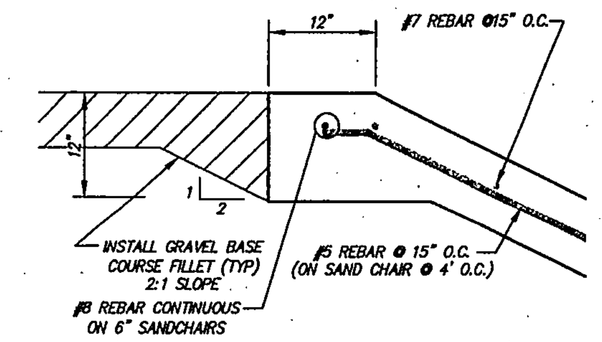

CHANNEL X-SECTION & EDGE THICKENING

N.T.S.

CERTIFICATE OF SUBSTANTIAL COMPLIANCE ON PLANS

I, James D. Hughes, NMPE 11674, of the firm Mark Goodwin & Associates, PA, a Registered Professional Engineer in the State of New Mexico, do hereby certify, to the best of my knowledge and belief, that the infrastructure installed as part of this project has been inspected by me or by a qualified person under my direct supervision, and has been constructed in accordance with the plans and specifications approved by the City Engineer and that the original design intent of the approved plans has been met, except as noted by me on the as-built construction drawings. This Certification is based on site inspections by me or personnel under my direction, and survey information provided by ALS, Inc., NMPS number 7719.

James D. Hughes NMPE 11674 2-12-07

JAMES D. HUGHES 11674 NEW MEXICO REGISTERED PROFESSIONAL ENGINEER

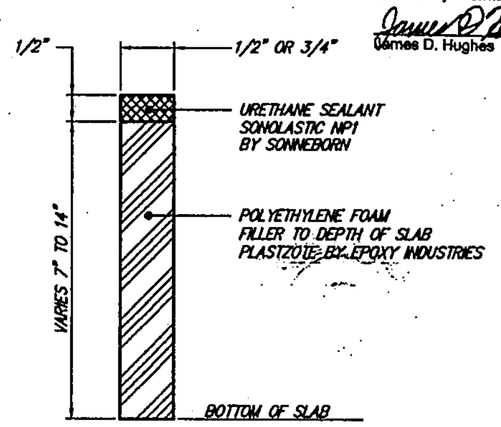

EXPANSION JOINT DETAIL

N.T.S.

AS BUILT INFORMATION

CONTRACTOR	
WORK STAKED BY	DATE
INSPECTOR'S ACCEPTANCE BY	DATE
FIELD VERIFICATION BY	DATE
DRAWINGS CORRECTED BY	
MICRO-FILM INFORMATION	
RECORDED BY	DATE
NO.	

BENCH MARKS

STATION "TRANS" IS LOCATED 6 MI. SOUTHWEST OF DOWNTOWN ALBUQUERQUE, IN THE R.O.W. OF A PLAINS ELECTRIC CO-OP TRANSMISSION LINE. TO REACH STATION FROM INTERSECTION OF CENTRAL AVE. & 98TH ST. SW, GO SOUTH ON 98TH ST. 1.2 MI. TO JUNCTION WITH GIBSON BLVD. & SNOW VISTA BLVD., THEN SOUTHEAST ALONG SNOW VISTA AND CO-OP ELECTRIC TRANSMISSION LINE 0.85 MI. TO PYLON NUMBERED "52". STATION IS JUST EAST OF THIS POINT.
X = 356,899.45, Y = 1,471,822.67, ELEV. = 5118.37
(NAD 1927/S.D. 1929)

SURVEY INFORMATION

FIELD NOTES

NO.	BY	DATE

ENGINEER'S SEAL

JAMES D. HUGHES 11674 NEW MEXICO REGISTERED PROFESSIONAL ENGINEER 2-12-07

NO.	DATE	REMARKS	BY

REVISIONS

		DATE
DESIGNED BY	JDH	05/04
DRAWN BY	DER	05/04
CHECKED BY	DMG	05/04

dmg MARK GOODWIN & ASSOCIATES, P.A.
CONSULTING ENGINEERS
P.O. BOX 90606
ALBUQUERQUE, NEW MEXICO 87199
(505) 828-2200, FAX (505) 797-9539

CITY OF ALBUQUERQUE
PUBLIC WORKS DEPARTMENT

TITLE: AMOLE CHANNEL (PHASE I) TYPICAL SECTIONS & DETAILS

DESIGN REVIEW COMMITTEE: APPROVED JUN 29 2005 DESIGN REVIEW COMMITTEE

CITY ENGINEER APPROVAL: APPROVED JUL 22 2005 CITY ENGINEER

LAST DESIGN UPDATE | MO./DAY/YR. | MO./DAY/YR.

CITY PROJECT NO. | ZONE MAP NO. N-9 | SHEET 3 OF 20

A04jobs\A4009SNH\amole channel plans\Phase1\4009-ph1-dtl.dwg\03-02-05\DER NHE JCC

NOTES

1. THE PIPE PENETRATION DETAILED HEREIN SHALL BE PAID FOR UNDER PIPE PENETRATION, (EACH) AND SHALL BE COMPENSATED FOR THE PENETRATION COMPLETE AND IN PLACE. INCLUDED IN THIS WORK (BUT NOT LIMITED TO) IS GRADING, SUBGRADE PREPARATION, REINFORCED CONCRETE, CONSTRUCTION JOINTS, CONCRETE PLACEMENT, 16" OF PROPER SIZE RCP, PRECAST PLUG IF NO CONNECTION IS MADE WITH THIS PROJECT, BACKFILL, AND FINISHING. NOTE: THE MEASUREMENT FOR CONCRETE CHANNEL LINING IS CONTINUOUS AND UNINTERRUPTED AT THE PENETRATION LOCATION.

2. THE TYPICAL TRANSVERSE AND LONGITUDINAL REINFORCEMENT SHALL BE CONTINUOUS THRU THE CONSTRUCTION JOINT LAPPED BAR SPLICES ADJACENT TO THE JOINT IS PERMITTED.
   #8 BAR LAP = 4'-2"
   #7 BAR LAP = 3'-2"
   #5 BAR LAP = 2'-2"

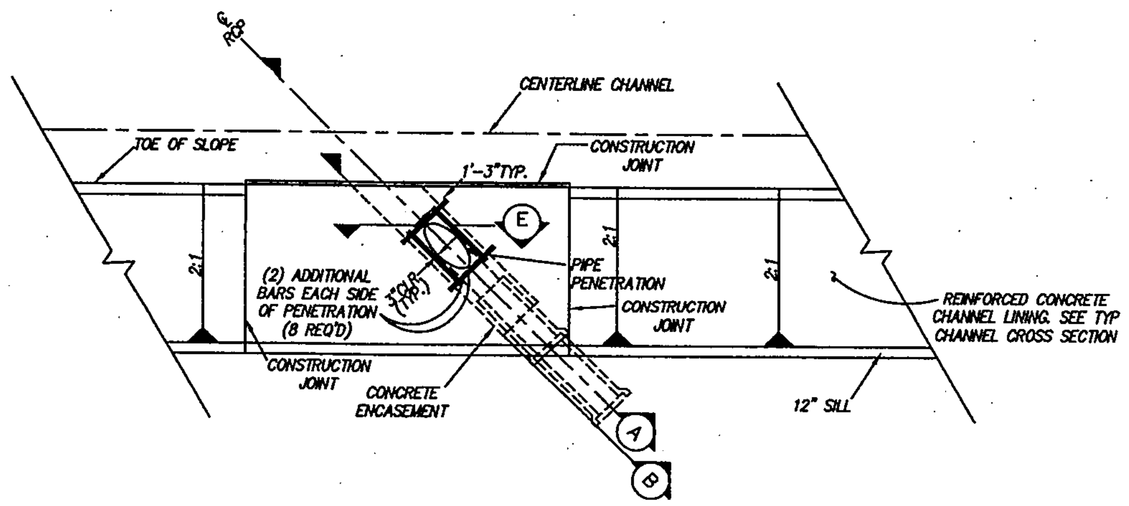

NOTE: CUT TYPICAL CHANNEL REINFORCING @ RCP PENETRATION. FIELD BEND CUT-BARS INTO CONCRETE ENCASEMENT 1'-3" MAINTAIN 3"CLR. (MIN) ON ALL SIDES.

TYPICAL PIPE PENETRATION (PLAN VIEW)

N.T.S.

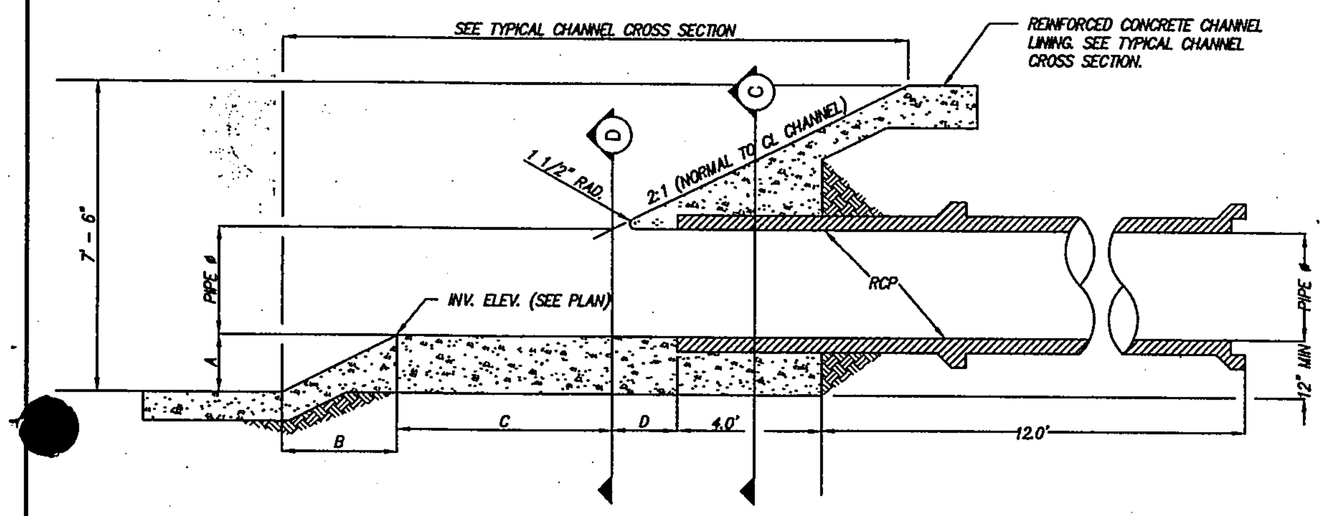

SECTION A — A

N.T.S.

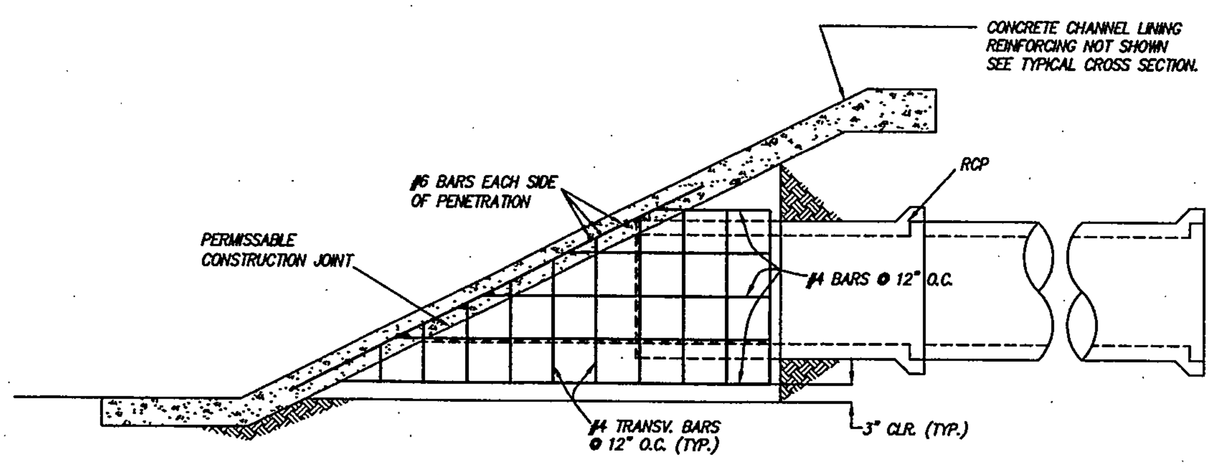

SECTION B — B

N.T.S.

TABLE OF DIMENSIONS								
CHANNEL STATION	PIPE DIAMETER	SLOPE	SKEW	CHANNEL DEPTH	INVERT TO INVERT A	B	C	D
20+50	4.5	2.50	45°	6.5	1.0	2.80	12.6	3.0
32+25	3.5	.	45°	6.2'	1.0	2.80	9.8	3.0
39+88	2.0	.	45°	7.0	1.0	2.80	5.6	3.0
42+45	4.0	2.67	45°	4.4	0.2	0.56	11.2	3.0
	FEET	PERCENT	DEGREES	FEET	FEET	FEET	FEET	FEET

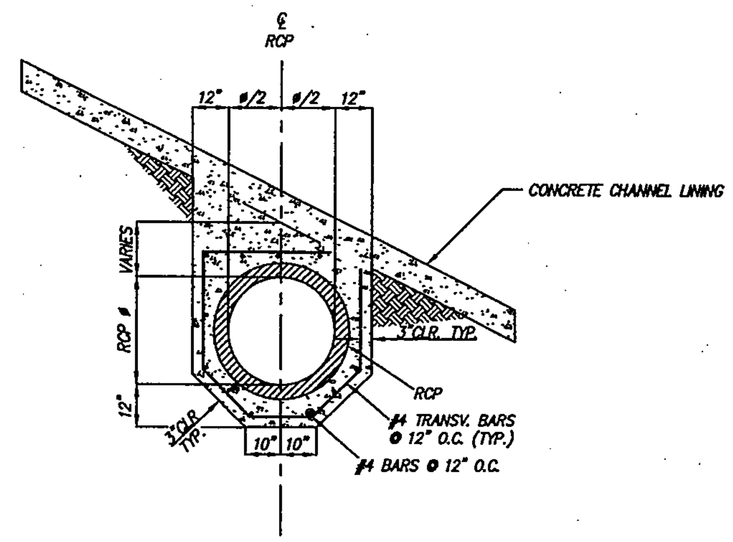

SECTION C — C

N.T.S.

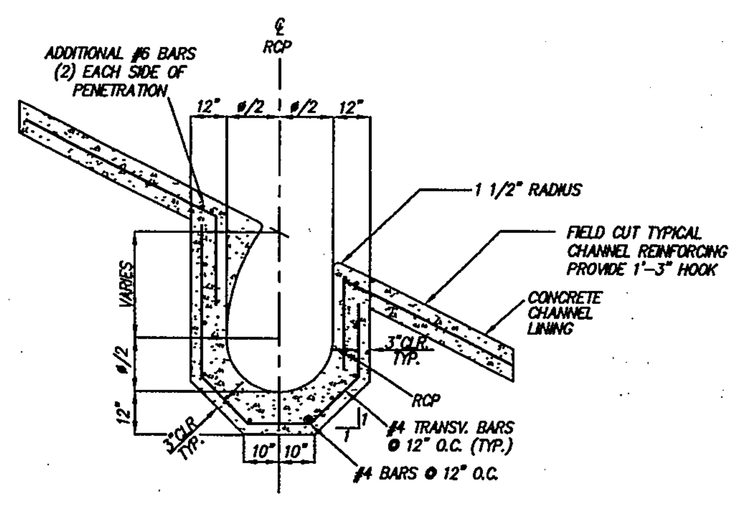

SECTION D — D

N.T.S.

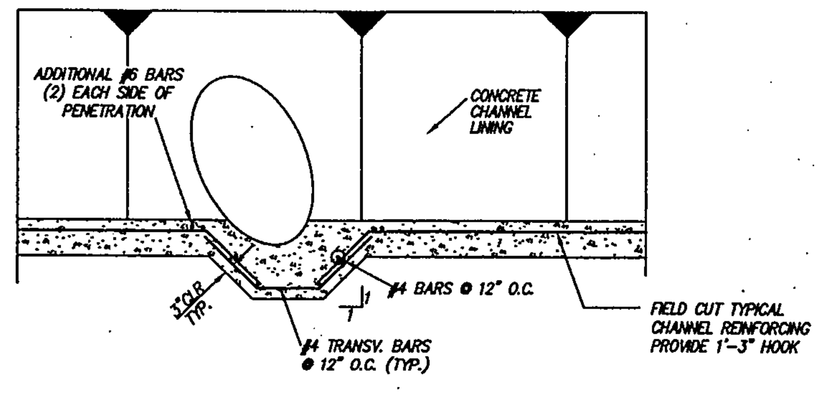

SECTION E — E

N.T.S.

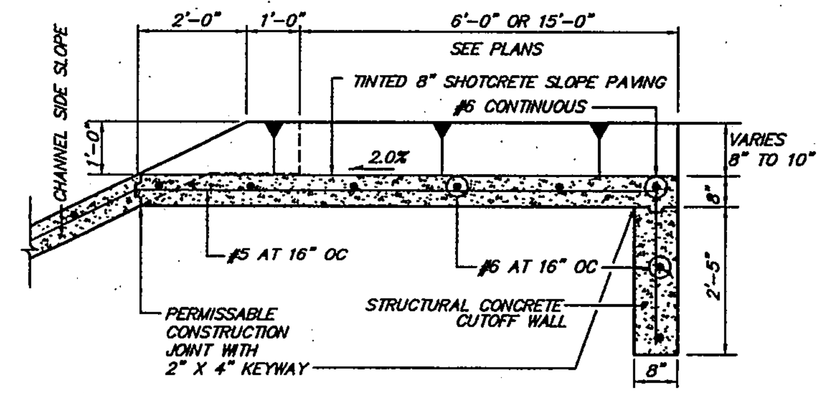

SECTION A—A

SCALE: NONE

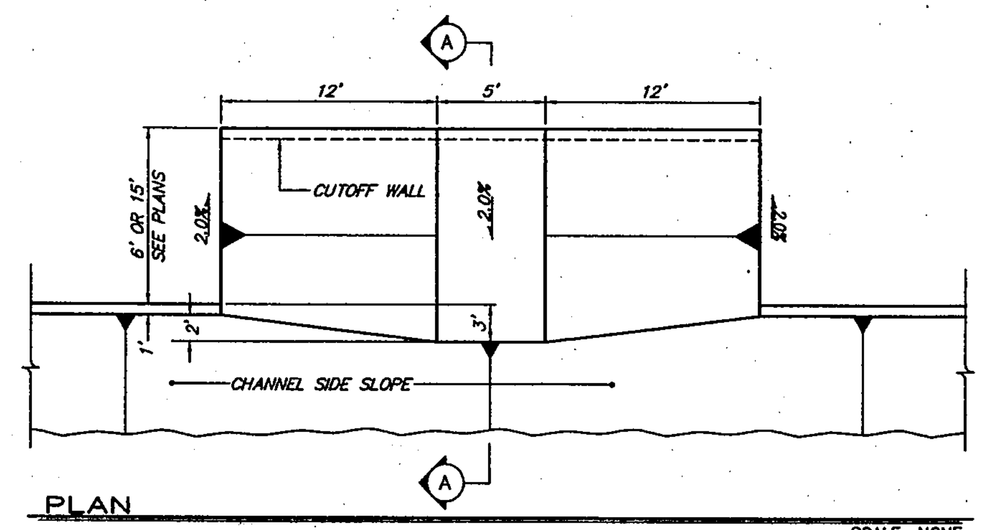

PLAN

SCALE: NONE

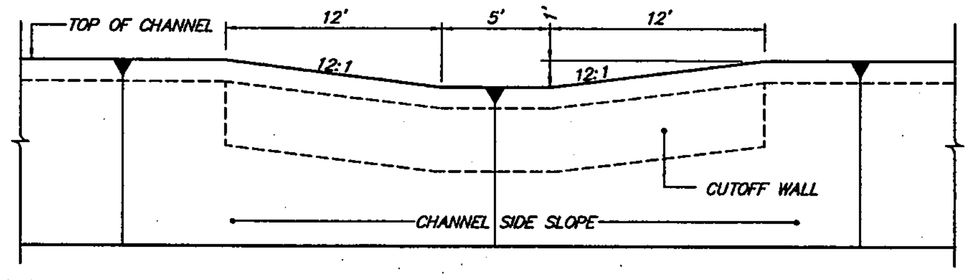

PROFILE

SCALE: NONE

CHANNEL RUNDOWN DETAILS— CHANNEL SIDE SLOPE

NOTE: SEE PLAN & PROFILE SHEETS FOR APPROPRIATE SPOT ELEVATIONS.

CERTIFICATE OF SUBSTANTIAL COMPLIANCE ON PLANS

I, James D. Hughes, NMPE 11674, of the firm Mark Goodwin & Associates, PA, a Registered Professional Engineer in the State of New Mexico, do hereby certify, to the best of my knowledge and belief, that the infrastructure installed as part of this project has been inspected by me or by a qualified person under my direct supervision, and has been constructed in accordance with the plans and specifications approved by the City Engineer and that the original design intent of the approved plans has been met, except as noted by me on the as-built construction drawings. This Certification is based on site inspections by me or personnel under my direction, and survey information provided by ALS, Inc., NMPS number 7719.

James D. Hughes 2-12-07
James D. Hughes NMPE 11674

JAMES D. HUGHES NEW MEXICO 11674 REGISTERED PROFESSIONAL ENGINEER

AS BUILT INFORMATION
CONTRACTOR
WORK STAKED BY DATE
INSPECTOR'S ACCEPTANCE DATE
FIELD VERIFICATION BY DATE
DRAWINGS CORRECTED BY DATE
MICRO-FILM INFORMATION
RECORDED BY DATE
NO. DATE

BENCH MARKS
STATION "TRANS" IS LOCATED 6 MI. SOUTHWEST OF DOWNTOWN ALBUQUERQUE, IN THE R.O.W. OF A PLAINS ELECTRIC CO-OP TRANSMISSION LINE. TO REACH STATION FROM INTERSECTION OF CENTRAL AVE. & 98TH ST. SW, GO SOUTH ON 98TH ST. 1.2 MI. TO JUNCTION WITH GIBSON BLVD. & SNOW VISTA BLVD., THEN SOUTHEAST ALONG SNOW VISTA AND CO-OP ELECTRIC TRANSMISSION LINE 0.85 MI. TO PYLON NUMBERED "52". STATION IS JUST EAST OF THIS POINT. X = 354,859.45, Y = 1,471,822.67, ELEV. = 5118.37 (NAD 1927/SD 1929)

SURVEY INFORMATION
FIELD NOTES

NO.	BY	DATE

ENGINEER'S SEAL
JAMES D. HUGHES NEW MEXICO 11674 REGISTERED PROFESSIONAL ENGINEER
2-7-05

NO.	DATE	REMARKS	BY

REVISIONS

		DATE
DESIGNED BY	GJK	10/01
DRAWN BY	MJR	10/01
CHECKED BY	DMG	10/01

dmg MARK GOODWIN & ASSOCIATES, P.A.
CONSULTING ENGINEERS
P.O. BOX 90606
ALBUQUERQUE, NEW MEXICO 87199
(505) 828-2200, FAX (505) 797-9539

ALBUQUERQUE METROPOLITAN ARROYO FLOOD CONTROL AUTHORITY

AMOLE CHANNEL

TITLE: GENERAL DETAILS

DESIGN REVIEW COMMITTEE: APPROVED JUN 29 2005 DESIGN REVIEW COMMITTEE

CITY ENGINEER APPROVAL: APPROVED JUL 22 2005 CITY ENGINEER

LAST DESIGN UPDATE MO./DAY/YR. MO./DAY/YR.

CITY PROJECT NO. 679482 | ZONE MAP NO. N-9 | SHEET 4 OF 20

A04jobs\A4009SNH\amole channel plans\Phase1\4009-Ph1-dtl_2.dwg\03-02-05\DER NHE JCC

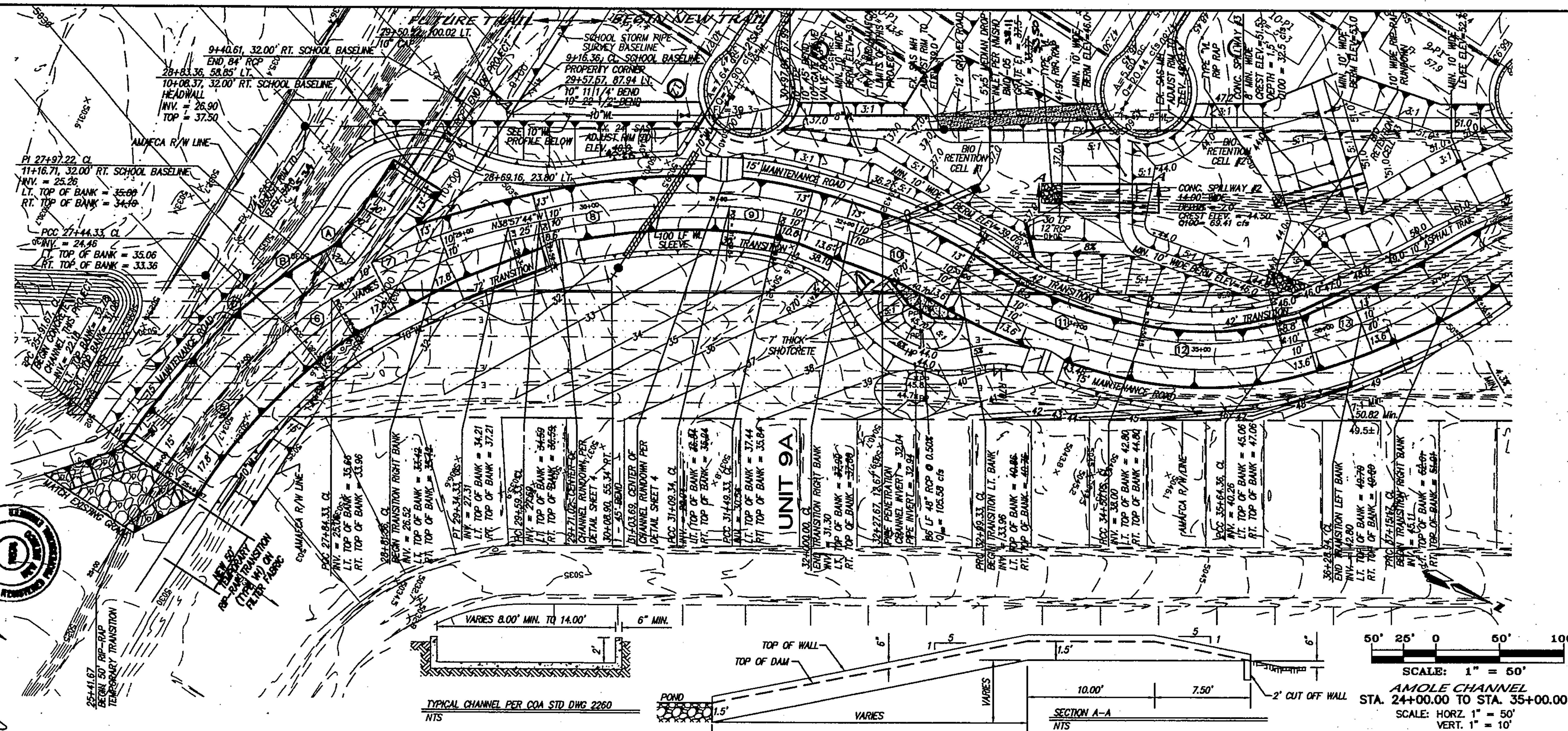

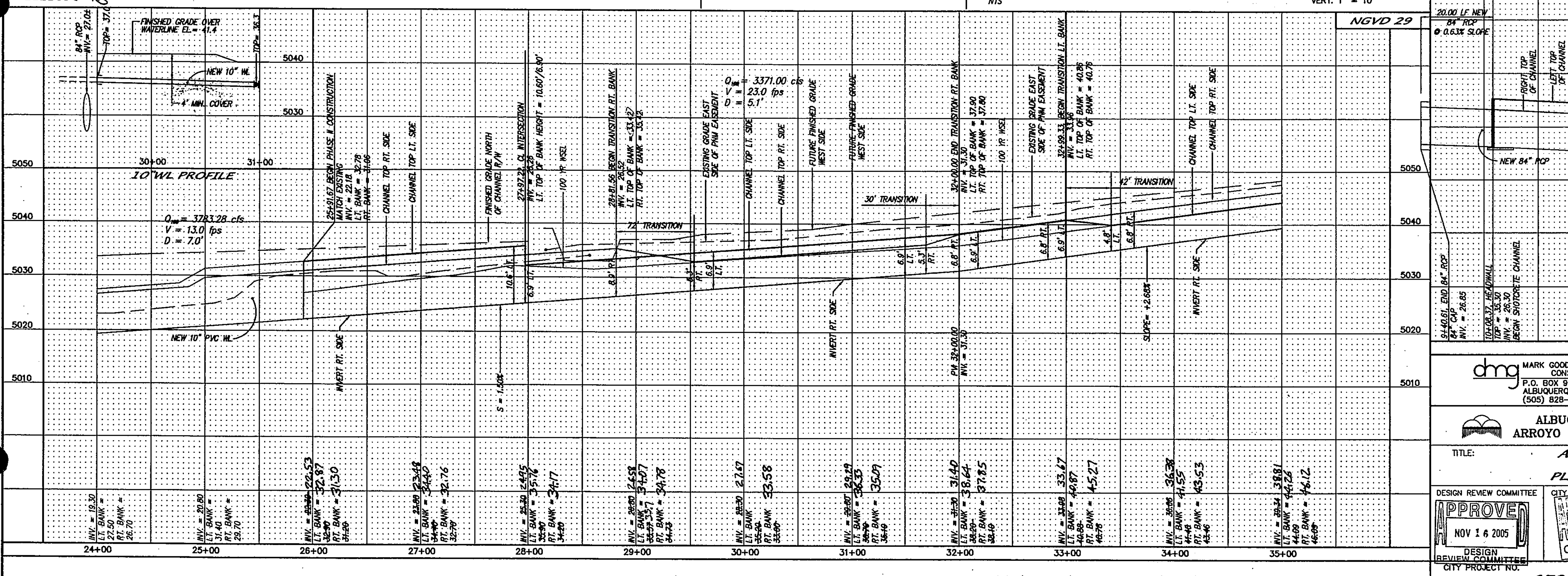

CERTIFICATE OF SUBSTANTIAL COMPLIANCE ON PLANS

I, James D. Hughes, NMPE 11674, of the firm Mark Goodwin & Associates, PA., a Registered Professional Engineer in the State of New Mexico, do hereby certify, to the best of my knowledge and belief, that the infrastructure installed as part of this project has been inspected by me or by a qualified person under my direct supervision, and has been constructed in accordance with the plans and specifications approved by the City Engineer and that the original design intent of the approved plans has been met, except as noted by me on the as-built construction drawings. This Certification is based on site inspections by me or personnel under my direction, and survey information provided by A.L.S. Inc., NMPS number 7719.

James D. Hughes NMPE 11674 2-12-07

NOTES

CURVE DATA – CENTERLINE OF CHANNEL

Curve	Δ	R	T	L
5	17°29'37"	500.00'	76.93'	152.66'
6	9°10'02"	250.00'	20.04'	40.00'
7	17°11'19"	500.00'	75.57'	150.00'
8	17°11'19"	500.00'	75.57'	150.00'
9	9°10'02"	250.00'	20.04'	40.00'
10	17°11'19"	500.00'	75.57'	150.00'
11	17°16'56"	500.00'	75.98'	150.82'
12	26°10'28"	250.00'	58.12'	114.21'
13	17°16'56"	500.00'	75.98'	150.82'

CURVE DATA – TOP OF CHANNEL

Curve	Δ	R	T	L
A	29°23'54"	39.00'	10.23'	20.01'
B	12°12'42"	286.00'	30.59'	60.96'
C	17°29'37"	536.00'	52.47'	163.65

CHANNEL DEPTH TABLE

STA. FROM	STA. TO	LINED DEPTH
LEFT		
25+00	28+82.31	10.6'
28+82.31	32+99.43	6.9'
32.99+33	36+28.94	4.8'
RIGHT		
25+00	28+82.31	8.9'
28+82.31	32+00	5.3'
32+00	37+15.17	6.8'

CELL #	Q 100	h	W
1	105.58 cfs	1.5'	6.55'
2	64.41 cfs	1.5'	14.00'
3	32.50 cfs	1.5'	21.28'
4	96 cfs	1.5'	19.35'

AS BUILT INFORMATION

CONTRACTOR
WORK STAKED BY — DATE
INSPECTOR'S ACCEPTANCE BY — DATE
FIELD VERIFICATION BY — DATE
DRAWINGS CORRECTED BY — DATE

MICRO-FILM INFORMATION

RECORDED BY — DATE
NO.

BENCH MARKS

STATION "TRANS" IS LOCATED 6 MI. SOUTHWEST OF DOWNTOWN ALBUQUERQUE, IN THE R.O.W. OF A PLAINS ELECTRIC CO-OP TRANSMISSION LINE. TO REACH STATION FROM INTERSECTION OF CENTRAL AVE. & 98TH ST. SW, GO SOUTH ON 98TH ST. 1.2 MI. TO JUNCTION WITH GIBSON BLVD. & SNOW VISTA BLVD., THEN SOUTHEAST ALONG SNOW VISTA AND CO-OP ELECTRIC TRANSMISSION LINE 0.85 MI. TO PYLON NUMBERED "52". STATION IS JUST EAST OF THIS POINT.
X = 354,899.45, Y = 1,471,822.67, ELEV. = 5118.37
(NAD 1927/SLD 1929)

SURVEY INFORMATION

NO.	FIELD NOTES BY	DATE

ENGINEER'S SEAL

JAMES D. HUGHES, NEW MEXICO, 11674, REGISTERED PROFESSIONAL ENGINEER — 10-21-05

REVISIONS

NO.	DATE	REMARKS	BY
1	11-14-05	Maintenance Ramps Added	JDH

DESIGN

DESIGNED BY JDH — DATE 05/04
DRAWN BY DER — DATE 05/04
CHECKED BY DMG — DATE 05/04

dmg MARK GOODWIN & ASSOCIATES, P.A.
CONSULTING ENGINEERS
P.O. BOX 90606
ALBUQUERQUE, NEW MEXICO 87199
(505) 828-2200, FAX (505) 797-9539

ALBUQUERQUE METROPOLITAN ARROYO FLOOD CONTROL AUTHORITY

TITLE: AMOLE CHANNEL (PHASE I) PLAN AND PROFILE

DESIGN REVIEW COMMITTEE — APPROVED NOV 16 2005 DESIGN REVIEW COMMITTEE
CITY ENGINEER APPROVAL — APPROVED NOV 16 2005 CITY ENGINEER
MO./DAY/YR. — MO./DAY/YR.
LAST DESIGN UPDATE

CITY PROJECT NO. 679482 — ZONE MAP NO. N-9 — SHEET 5 OF 20

A04jobs\A4009SNH\amole channel plans\phase1\4009-ph1-pp3.dwg\10-25-05\DER NHE JCC TAS

A04jobs\A40095NH\amole channel plans\Phase1\4009-ph1-pp4.dwg\10-25-05\DER NHE JCC TAS

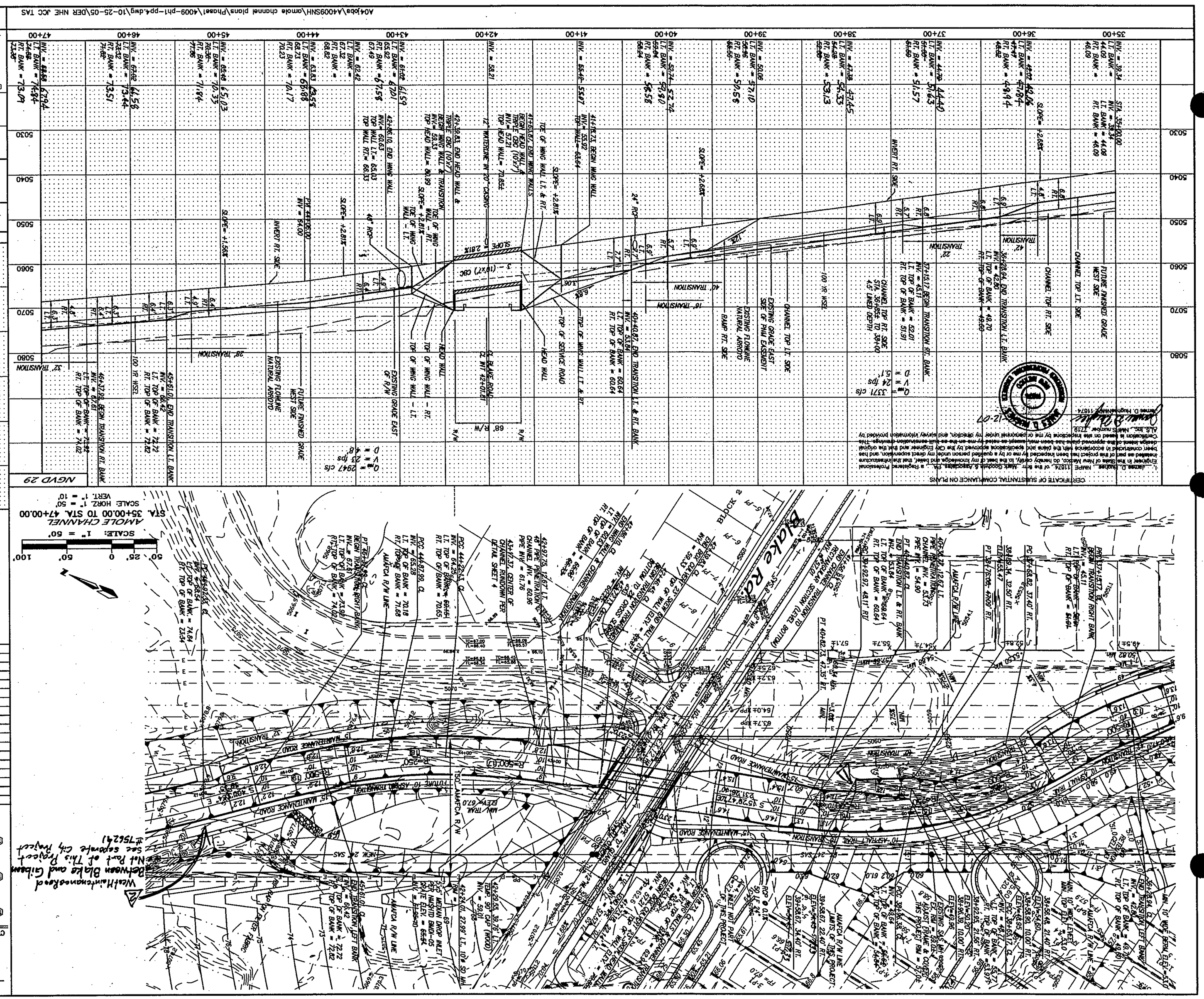

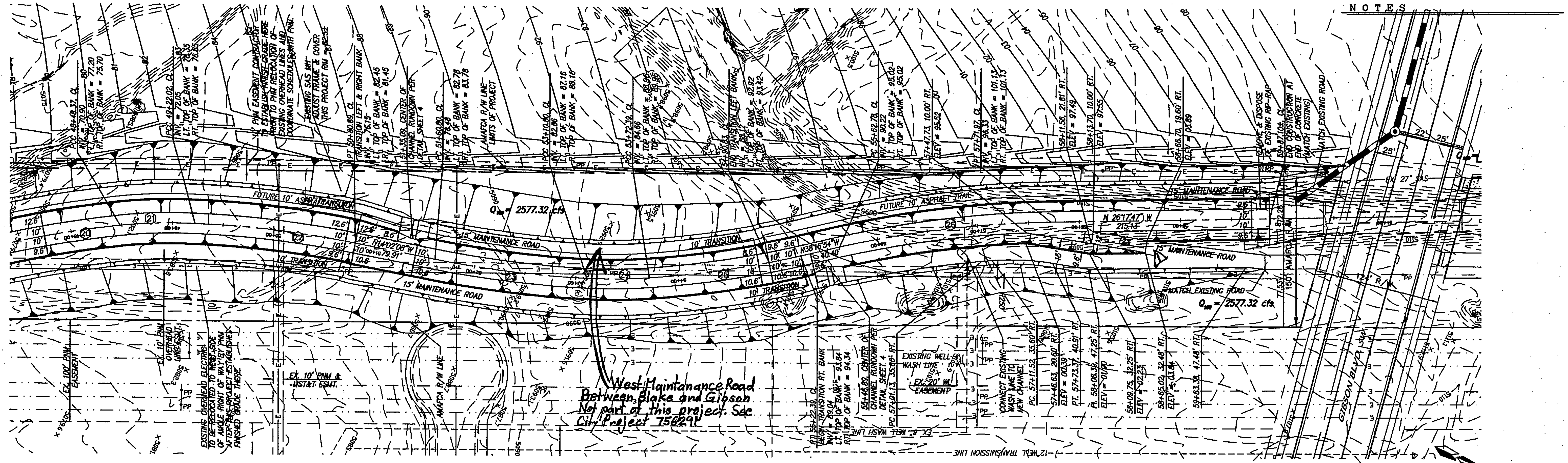

CHANNEL DEPTH TABLE — LEFT

STA. FROM	STA. TO	LINED DEPTH
45+61.01	50+80.89	6.3'
50+80.89	54+90.83	4.3'
54+90.83	59+87.10	4.8'

CHANNEL DEPTH TABLE — RIGHT

STA. FROM	STA. TO	LINED DEPTH
46+37.99	50+80.89	4.8'
50+80.89	55+22.39	5.3'
55+22.39	59+87.10	4.8'

CURVE DATA – CENTERLINE OF CHANNEL

Curve	Δ	R	T	L
20	8°39'14"	1000.00'	75.66'	151.04'
21	8°26'23"	500.00'	36.89'	73.65'
22	9°06'09"	1000.00'	79.60'	158.87'
23	8°35'40"	1000.00'	75.14'	150.00'
24	7°03'26"	500.00'	30.83'	61.59'
25	8°35'40"	1000.00'	75.14'	150.00'
26	11°59'07"	1000.00'	104.97'	209.18'

SCALE: 1" = 50'

AMOLE CHANNEL
STA. 47+00.00 TO STA. 61+50.00
SCALE: HORZ. 1" = 50'
VERT. 1" = 10'

CERTIFICATE OF SUBSTANTIAL COMPLIANCE ON PLANS

I, James D. Hughes, NMPE 11674, of the firm Mark Goodwin & Associates, PA, a Registered Professional Engineer in the State of New Mexico, do hereby certify, to the best of my knowledge and belief, that the infrastructure installed as part of this project has been inspected by me or by a qualified person under my direct supervision, and has been constructed in accordance with the plans and specifications approved by the City Engineer and that the original design intent of the approved plans has been met, except as noted by me on the as-built construction drawings. This Certification is based on site inspections by me or personnel under my direction, and survey information provided by ALS, Inc. NMPS number 7719.

James D. Hughes NMPE 11674 — 2-12-07

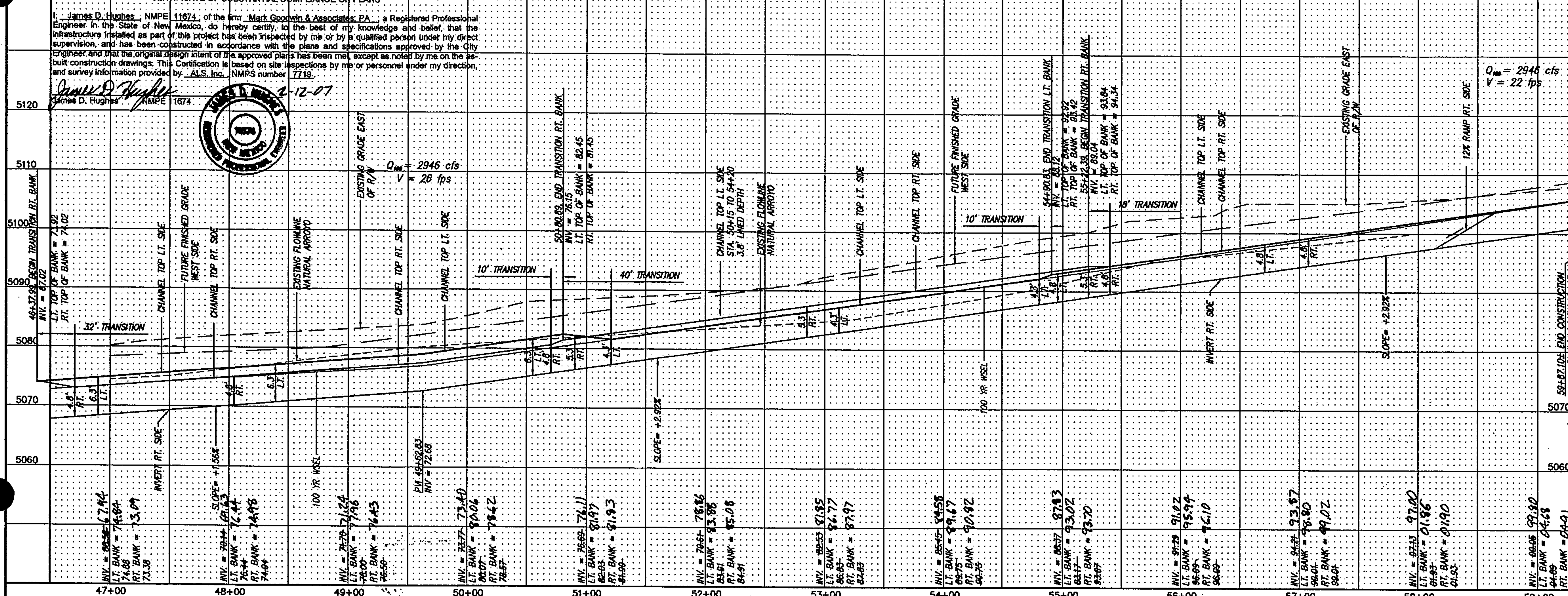

AS BUILT INFORMATION

CONTRACTOR	
WORK STAKED BY	DATE
INSPECTOR'S ACCEPTANCE BY	DATE
FIELD VERIFICATION BY	DATE
DRAWINGS CORRECTED BY	DATE

MICRO-FILM INFORMATION

RECORDED BY — DATE — NO.

BENCH MARKS

STATION "TRANS" IS LOCATED 6 MI. SOUTHWEST OF DOWNTOWN ALBUQUERQUE, IN THE R.O.W. OF A PLAINS ELECTRIC CO-OP TRANSMISSION LINE. TO REACH STATION FROM INTERSECTION OF CENTRAL AVE. & 98TH ST. SW, GO SOUTH ON 98TH ST. 1.2 MI. TO JUNCTION WITH GIBSON BLVD. & SNOW VISTA BLVD., THEN SOUTHEAST ALONG SNOW VISTA AND CO-OP ELECTRIC TRANSMISSION LINE 0.85 MI. TO PYLON NUMBERED "52". STATION IS JUST EAST OF THIS POINT.
X = 354,899.45, Y = 1,471,822.67, ELEV. = 5118.37
(NAD 1927/SLD 1929)

SURVEY INFORMATION — FIELD NOTES — NO. | BY | DATE

ENGINEER'S SEAL — JAMES D. HUGHES 11674 NEW MEXICO REGISTERED PROFESSIONAL ENGINEER — 10-26-05

REVISIONS

NO.	DATE	REMARKS	BY
1	11-1-05	Ramp Added	JDH
2	12-1-05	Delete West Maintenance Rd	JDH

DESIGN			
DESIGNED BY	JDH	DATE	05/04
DRAWN BY	DER	DATE	05/04
CHECKED BY	DMG	DATE	05/04

MARK GOODWIN & ASSOCIATES, P.A.
CONSULTING ENGINEERS
P.O. BOX 90606
ALBUQUERQUE, NEW MEXICO 87199
(505) 828-2200, FAX (505) 797-9539

ALBUQUERQUE METROPOLITAN
ARROYO FLOOD CONTROL AUTHORITY

TITLE: AMOLE CHANNEL (PHASE I) PLAN AND PROFILE

DESIGN REVIEW COMMITTEE — APPROVED NOV 16 2005 — DESIGN REVIEW COMMITTEE
CITY ENGINEER APPROVAL — APPROVED NOV 16 2005 — CITY ENGINEER
MO./DAY/YR. — MO./DAY/YR. — LAST DESIGN UPDATE

CITY PROJECT NO. 679482 — ZONE MAP NO. N-9 — SHEET 7 OF 20

A04jobs\A4009SNH\amole channe plans\Phase1\4009-ph1-pp5.dwg\10-25-05\DER NHE JCC TAS

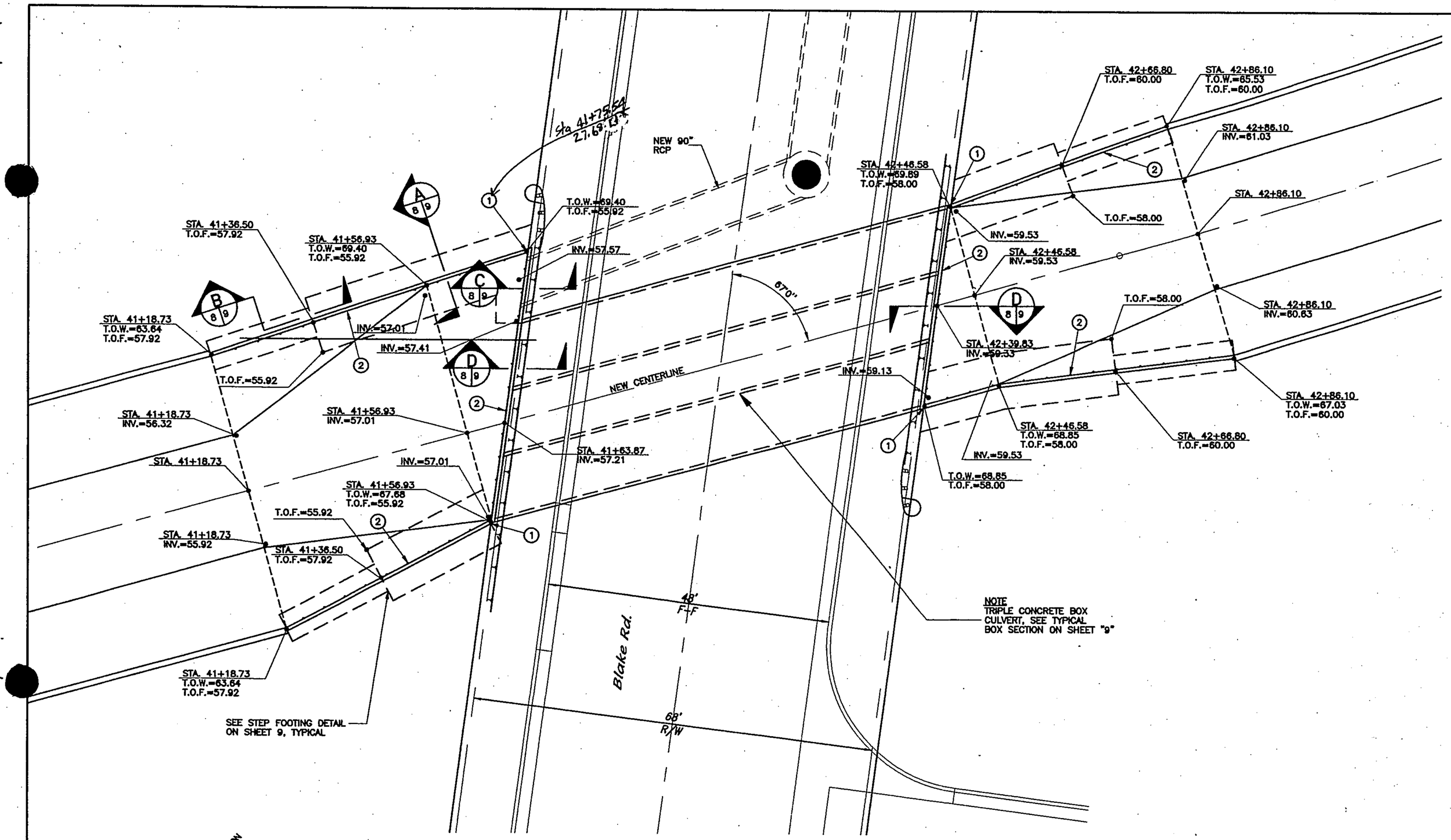

PLAN VIEW AMOLE CHANNEL TRANSITION AT BLAKE ROAD

SCALE: 1"=10'-0"

○ KEYED NOTES:

1. #5 x 4'-0" DOWEL FROM CBC TO TRANSITION WALL AT 12" O.C., SEE DETAIL ON SHEET 9
2. PIPE RAILING AS PER DETAILS ON SHEET 9, TYPICAL

10' 5' 0 10' 20'

SCALE: 1" = 10'

GENERAL NOTES

1. ALL CONCRETE BOX AND TRANSITION WORK SHALL CONFORM TO NEW MEXICO STATE HIGHWAY AND TRANSPORTATION DEPARTMENT SPECIFICATIONS, 2000.
2. REINFORCING BARS SHALL BE GRADE 60 UNLESS NOTED OTHERWISE.
3. ALL CONCRETE SHALL HAVE A MINIMUM 28 – DAY COMPRESSIVE STRENGTH OF 4000 PSI (CLASS AA) WITH 6% ENTRAINED AIR. CHAMFER ALL EXPOSED EDGES OF CONCRETE 3/4 INCH UNLESS OTHERWISE NOTED.
4. PROVIDE 12" SUBGRADE PREP AS PER COA SPECIFICATIONS UNDERNEATH CBC's AND TRANSITION STRUCTURES, EXTEND 12" BEYOND THE EDGES OF FOOTINGS

CERTIFICATE OF SUBSTANTIAL COMPLIANCE ON PLANS

I, James D. Hughes, NMPE 11674, of the firm Mark Goodwin & Associates, PA, a Registered Professional Engineer in the State of New Mexico, do hereby certify, to the best of my knowledge and belief, that the infrastructure installed as part of this project has been inspected by me or by a qualified person under my direct supervision, and has been constructed in accordance with the plans and specifications approved by the City Engineer and that the original design intent of the approved plans has been met, except as noted by me on the as-built construction drawings. This Certification is based on site inspections by me or personnel under my direction, and survey information provided by ALS, Inc., NMPS number 7719.

James D. Hughes 2-12-07
James D. Hughes NMPE 11674

AS BUILT INFORMATION
CONTRACTOR
WORK STAKED BY
INSPECTED BY
ACCEPTANCE BY
FIELD VERIFICATION BY
DRAWINGS CORRECTED BY
MICRO-FILM INFORMATION
RECORDED BY
NO.
DATE

BENCH MARKS

SURVEY INFORMATION
FIELD NOTES
NO. BY DATE

ENGINEER'S SEAL
JOHN P. GIERSCH NEW MEXICO 14063 REGISTERED PROFESSIONAL ENGINEER
2-1-05

NO.	DATE	REMARKS	BY

REVISIONS

DESIGN
DESIGNED BY JPG DATE 2/1/05
DRAWN BY TEP DATE 2/1/05
CHECKED BY RJ DATE 2/1/05

104144
CMI, Inc.
Mechanical / Electrical / Structural Consulting Engineers
8400 Uptown Boulevard, N.E. Suite 505E
Albuquerque, New Mexico 87110
(505) 884-8868
FAX 884-7048

CITY OF ALBUQUERQUE
PUBLIC WORKS DEPARTMENT

TITLE: AMOLE CHANNEL IMPROVEMENTS CONCRETE TRANSITIONS

DESIGN REVIEW COMMITTEE: APPROVED JUN 29 2005 DESIGN REVIEW COMMITTEE
CITY ENGINEER APPROVAL: APPROVED JUL 22 2005 CITY ENGINEER
LAST DESIGN UPDATE: MO./DAY/YR. MO./DAY/YR.

CITY PROJECT NO. 679482
ZONE MAP NO. N-9
SHEET 8 OF 20

RETAINING WALL SCHEDULE				
"H"	"A"	"B"	"C"	"D"
0'-0" TO 9'-0"	5'-8"	2'-6"	2'-0"	1'-6"
9'-1" TO 14'-0"	9'-8"	5'-0"	3'-6"	1'-6"

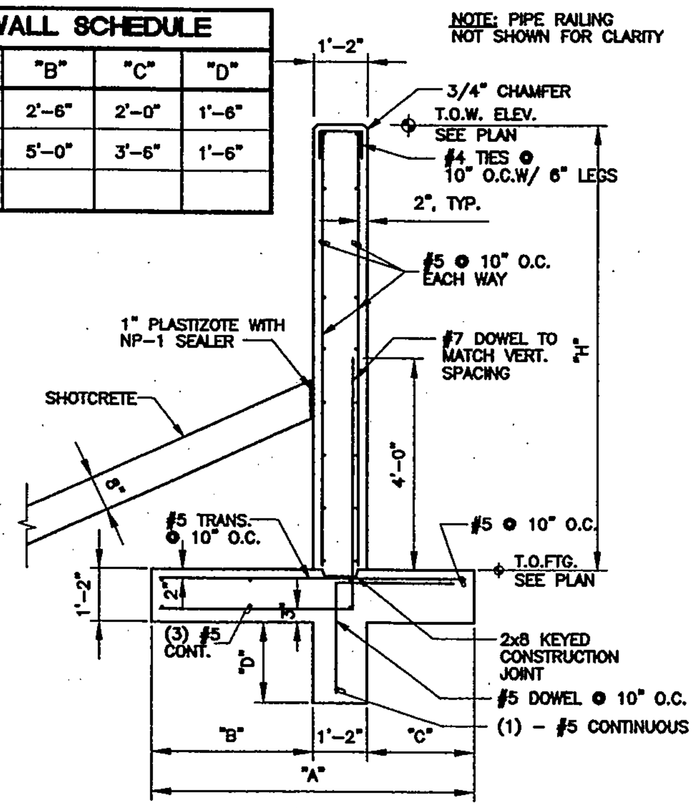

RETAINING WALL (A 9/10)
1/2" = 1'-0"

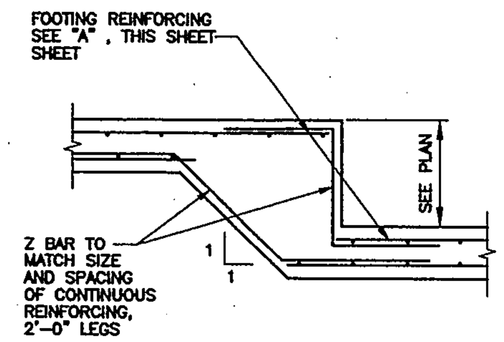

STEP FOOTING DETAIL (B 9/10)
1/2" = 1'-0"

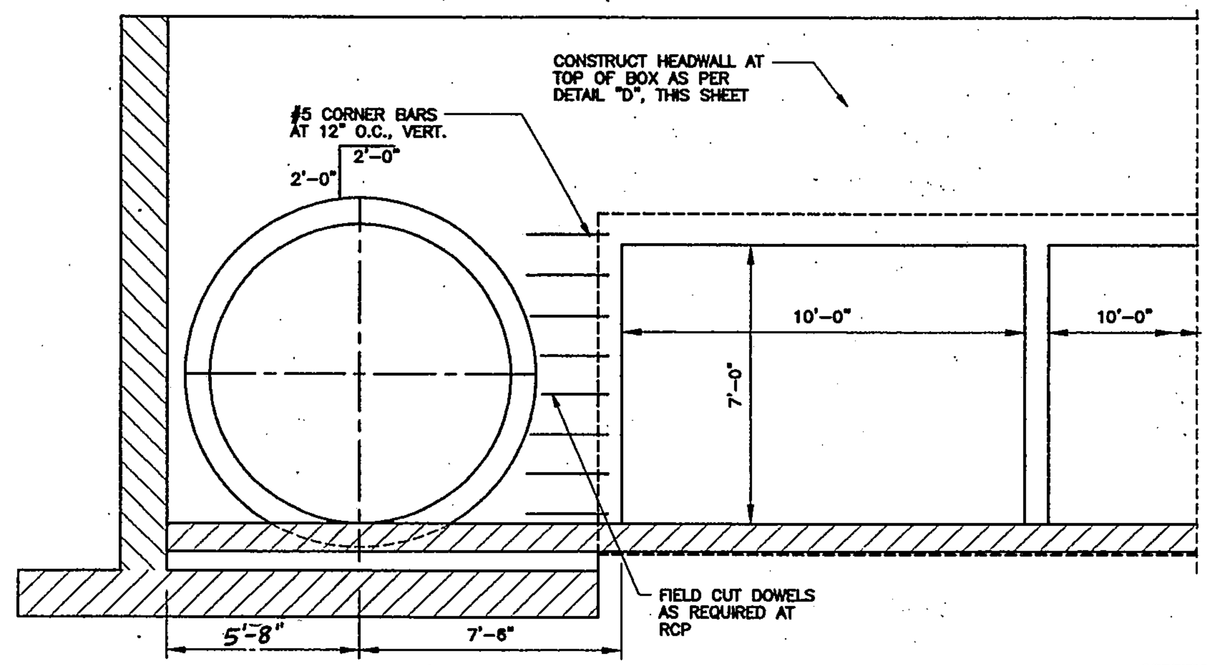

STA. 41+63.87
ELEVATION TRANSITION SECTION (1 9/10)
3/8" = 1'-0"

CERTIFICATE OF SUBSTANTIAL COMPLIANCE ON PLANS

I, James D. Hughes, NMPE 11674, of the firm Mark Goodwin & Associates, PA, a Registered Professional Engineer in the State of New Mexico, do hereby certify, to the best of my knowledge and belief, that the infrastructure installed as part of this project has been inspected by me or by a qualified person under my direct supervision, and has been constructed in accordance with the plans and specifications approved by the City Engineer and that the original design intent of the approved plans has been met, except as noted by me on the as-built construction drawings. This Certification is based on site inspections by me or personnel under my direction, and survey information provided by ALS, Inc., NMPS number 7719.

James D. Hughes 2-12-07
James D. Hughes NMPE 11674

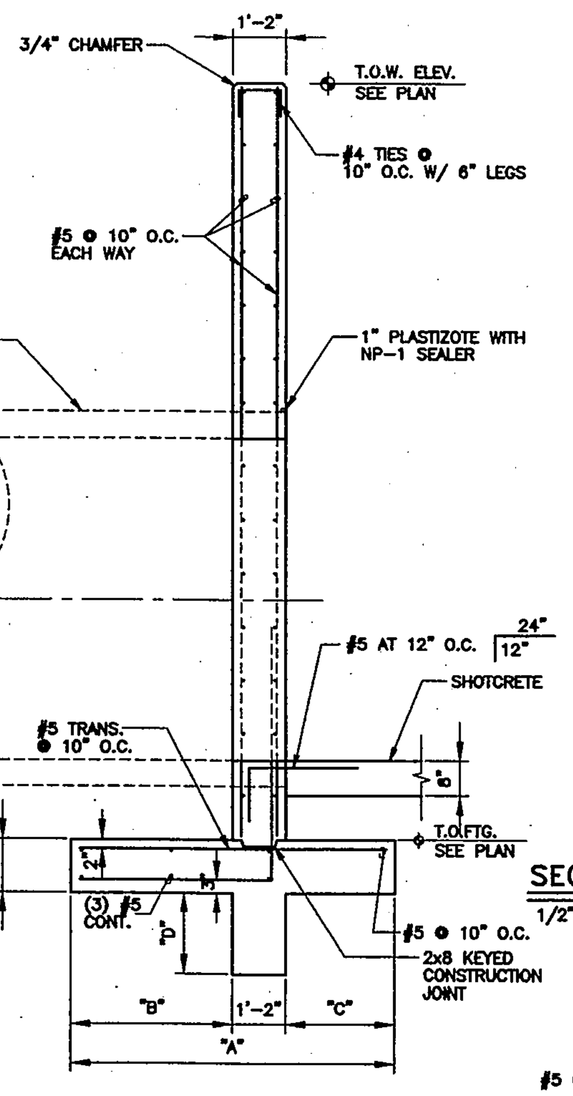

WALL SECTION @ RCP (C 9/10)
1/2" = 1'-0"

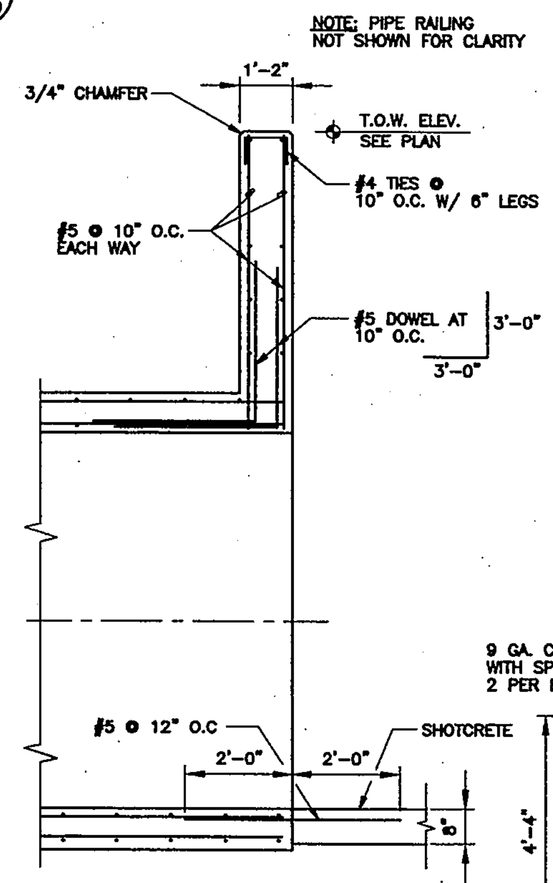

SECTION @ END OF BOX (D 9/10)
1/2" = 1'-0"

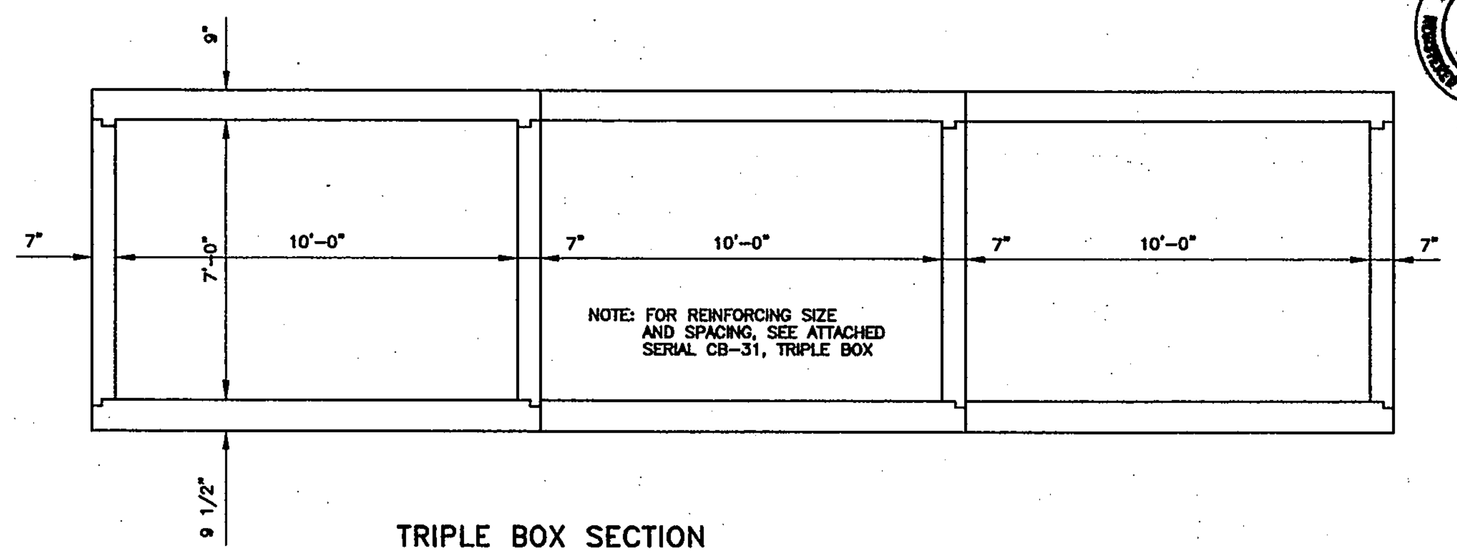

TRIPLE BOX SECTION
3/8" = 1'-0"

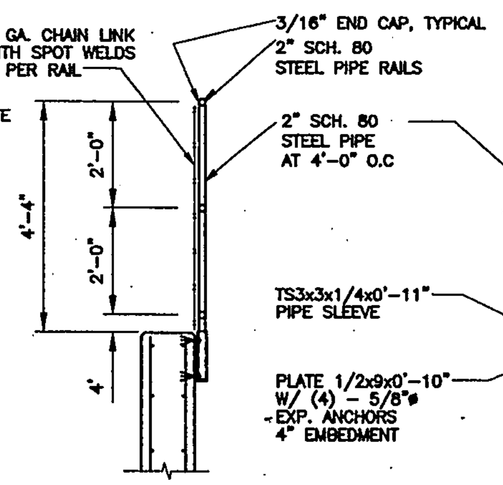

RAILING DETAIL
1/2" = 1'-0"

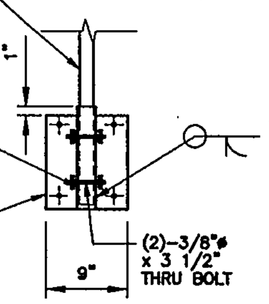

BASE DETAIL
1" = 1'-0"

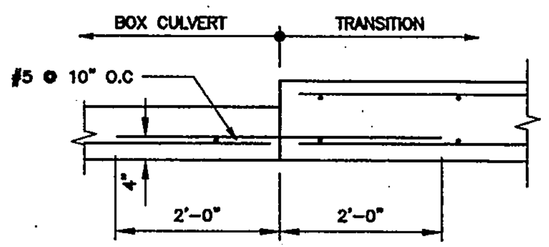

BOX CULVERT / TRANSITION CONNECTION DETAIL
3/4" = 1'-0"

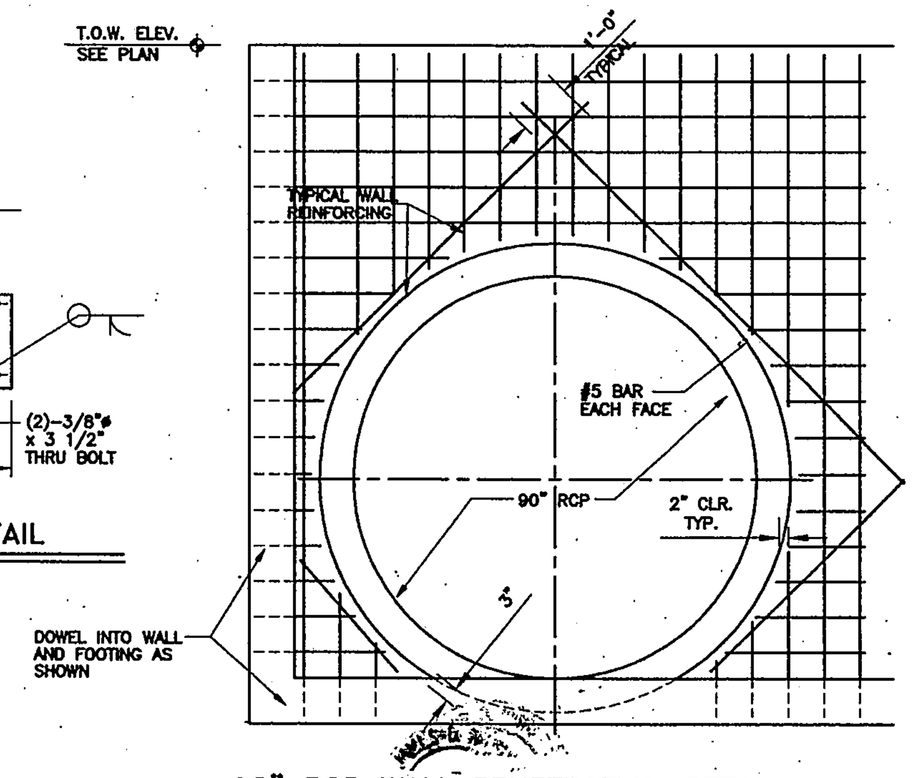

90" RCP WALL PENETRATION DETAIL
NO SCALE

AS BUILT INFORMATION
CONTRACTOR
WORK STAKED BY DATE
INSPECTED BY DATE
FIELD VERIFICATION BY DATE
DRAWINGS CORRECTED BY DATE
MICRO-FILM INFORMATION
RECORDED BY DATE
NO.

BENCH MARKS

SURVEY INFORMATION
FIELD NOTES

NO.	BY	DATE

ENGINEER'S SEAL

NO.	DATE	REMARKS	BY
		REVISIONS	

		DATE
DESIGN		
DESIGNED BY	JPG	2/1/05
DRAWN BY	TEP	2/1/05
CHECKED BY	RJJ	2/1/05

104144
CME, Inc.
Mechanical / Electrical / Structural Consulting Engineers
8400 Uptown Boulevard, N.E. Suite 505E
Albuquerque, New Mexico 87110
(505) 884-5868
FAX 884-7848

CITY OF ALBUQUERQUE
PUBLIC WORKS DEPARTMENT

TITLE:
AMOLE CHANNEL IMPROVEMENTS
SECTIONS AND DETAILS

DESIGN REVIEW COMMITTEE: APPROVE JUN 29 2005 DESIGN REVIEW COMMITTEE
CITY ENGINEER APPROVAL: APPROVE JUL 22 2005 CITY ENGINEER
LAST DESIGN UPDATE | MO./DAY/YR. | MO./DAY/YR.

CITY PROJECT NO. 679482 | ZONE MAP NO. N-9 | SHEET 9 OF 20

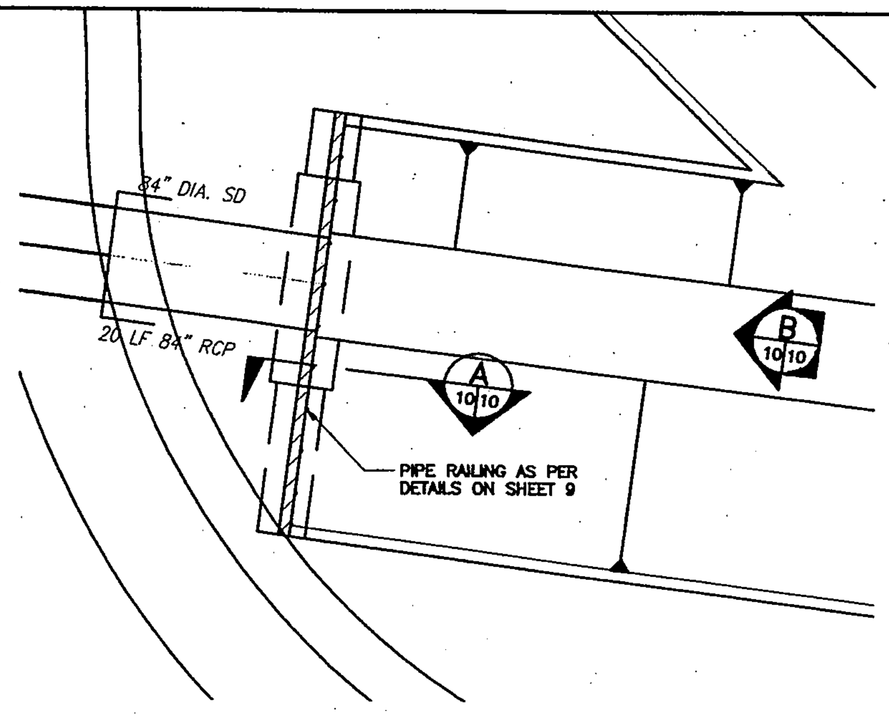

FOOTING SCHEDULE			
"H"	"A"	"B"	"C"
11'-0"	8'-0"	3'-0"	4'-0"
8'-0"	5'-3"	2'-0"	2'-3"

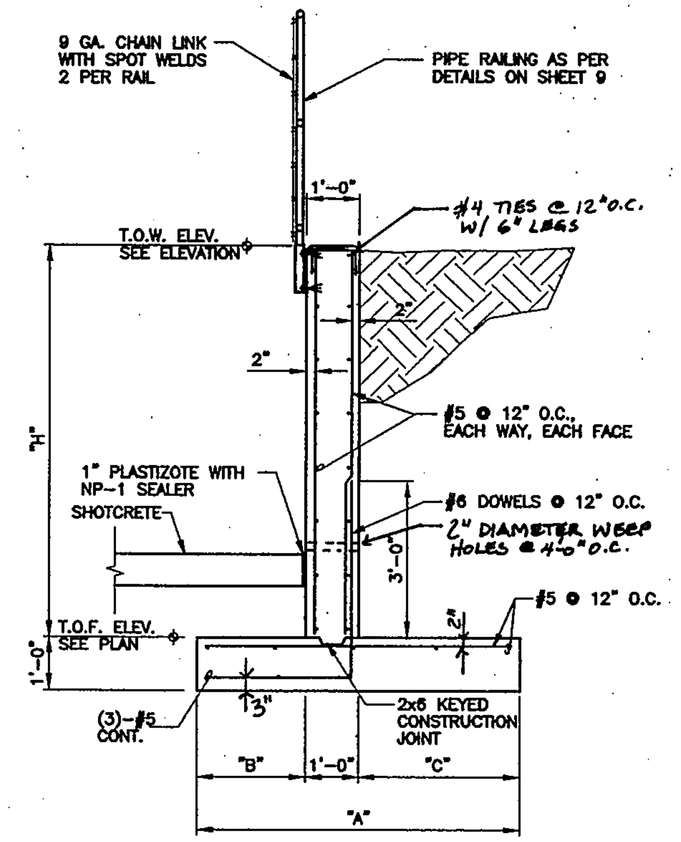

HEADWALL SECTION (A 10/10)

1/2" = 1'-0"

HUNON (TRUE)

STA. 29+00

PLAN VIEW AMOLE CHANNEL PARTIAL HEADWALL PLAN

SCALE: 1"=10'-0"

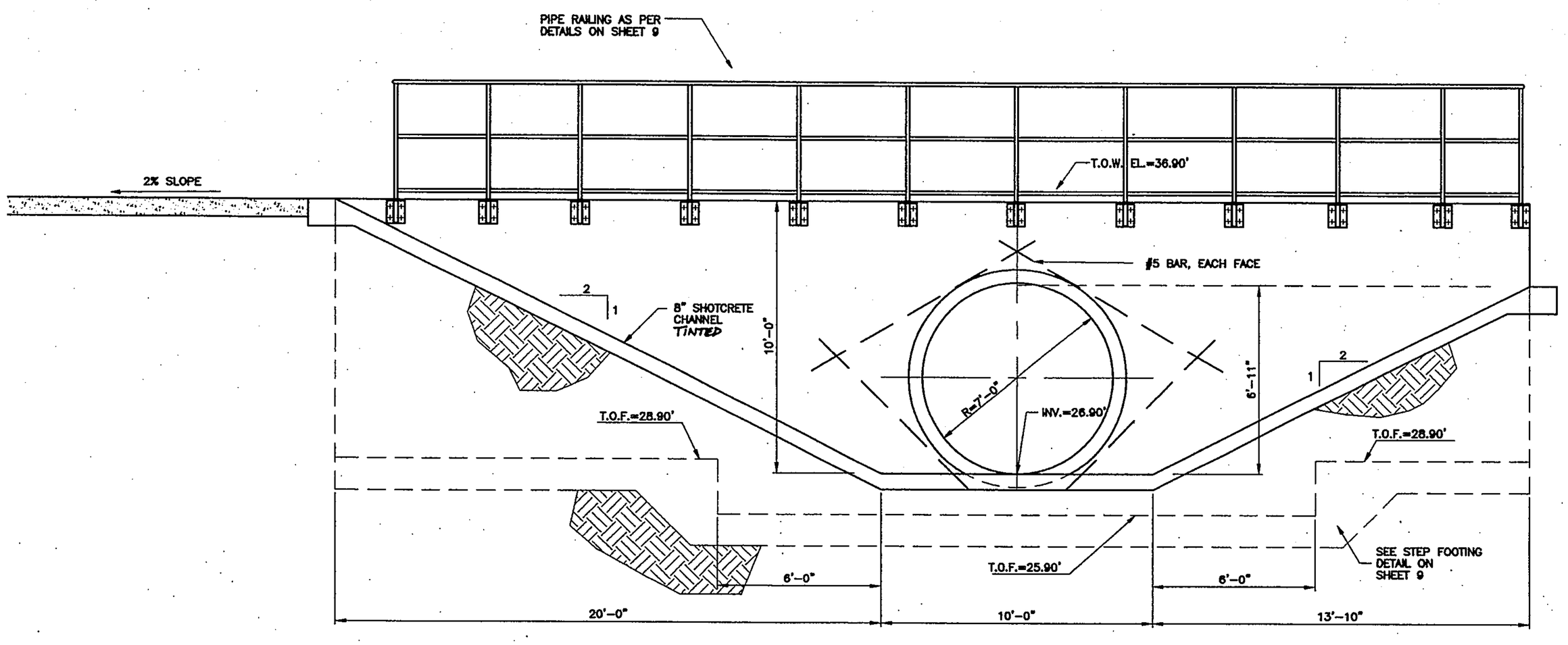

HEADWALL ELEVATION (B 10/10)

SCALE: 3/8"=1'-0"

CERTIFICATE OF SUBSTANTIAL COMPLIANCE ON PLANS

I, James D. Hughes, NMPE 11674, of the firm Mark Goodwin & Associates, PA, a Registered Professional Engineer in the State of New Mexico, do hereby certify, to the best of my knowledge and belief, that the infrastructure installed as part of this project has been inspected by me or by a qualified person under my direct supervision, and has been constructed in accordance with the plans and specifications approved by the City Engineer and that the original design intent of the approved plans has been met, except as noted by me on the as-built construction drawings. This Certification is based on site inspections by me or personnel under my direction, and survey information provided by ALS, Inc., NMPS number 7719.

James D. Hughes NMPE 11674 2-12-07

JAMES D. HUGHES NEW MEXICO 11674 REGISTERED PROFESSIONAL ENGINEER

SCALE: 1" = 10'

AS BUILT INFORMATION

CONTRACTOR | DATE
WORK STAKED BY | DATE
INSPECTOR ACCEPTANCE BY | DATE
FIELD VERIFICATION BY | DATE
DRAWINGS CORRECTED BY | DATE

MICRO-FILM INFORMATION

RECORDED BY | DATE
NO.

BENCH MARKS

SURVEY INFORMATION

FIELD NOTES

NO.	BY	DATE

ENGINEER'S SEAL

ANDREW P. GIERSCH NEW MEXICO 14063 REGISTERED PROFESSIONAL ENGINEER 2-1-05

NO.	DATE	REMARKS	BY

REVISIONS

DESIGN

DESIGNED BY	JPG	DATE 2/1/05
DRAWN BY	TEP	DATE 2/1/05
CHECKED BY	RU	DATE 2/1/05

104144

CMI, Inc.
Mechanical / Electrical / Structural Consulting Engineers
6400 Uptown Boulevard, N.E. Suite 505E
Albuquerque, New Mexico 87110
(505) 884-8868
FAX 884-7048

CITY OF ALBUQUERQUE
PUBLIC WORKS DEPARTMENT

TITLE: AMOLE CHANNEL IMPROVEMENTS
HEADWALL PARTIAL PLAN, SECTION & DETAILS

DESIGN REVIEW COMMITTEE: APPROVED JUN 29 2005 DESIGN REVIEW COMMITTEE

CITY ENGINEER APPROVAL: APPROVED JUL 22 2005 CITY ENGINEER

LAST DESIGN UPDATE | MO./DAY/YR. | MO./DAY/YR.

CITY PROJECT NO. 679482 | ZONE MAP NO. N-9 | SHEET 10 OF 20

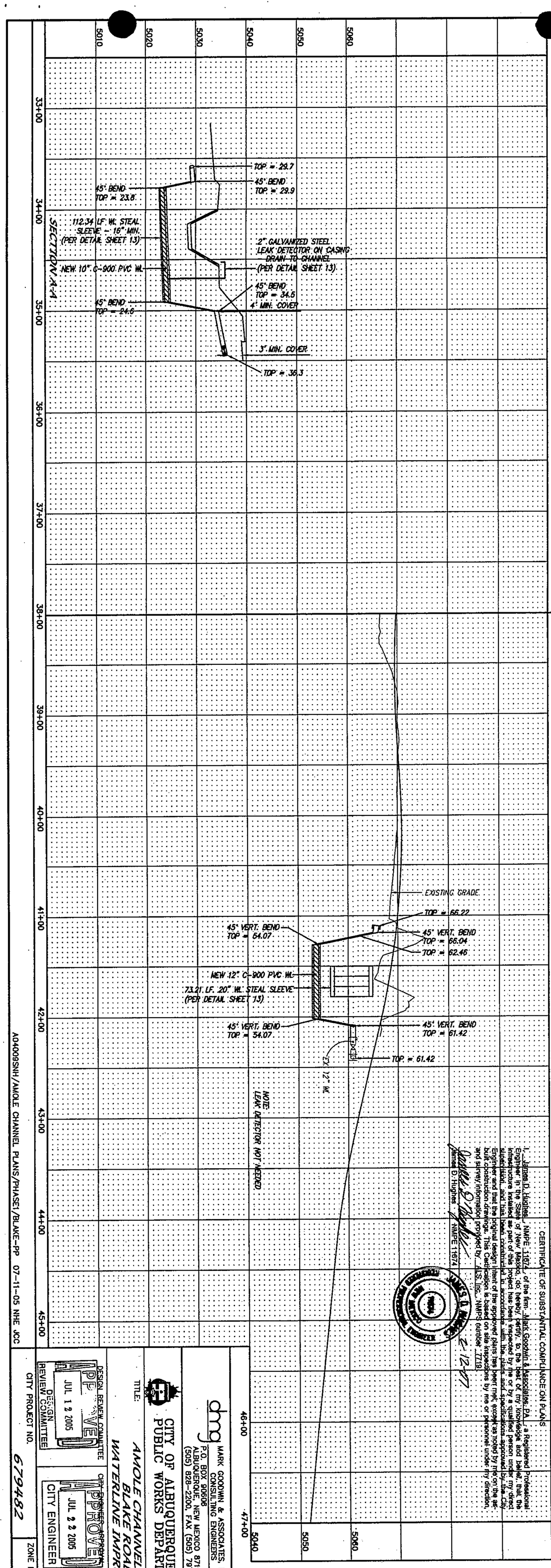

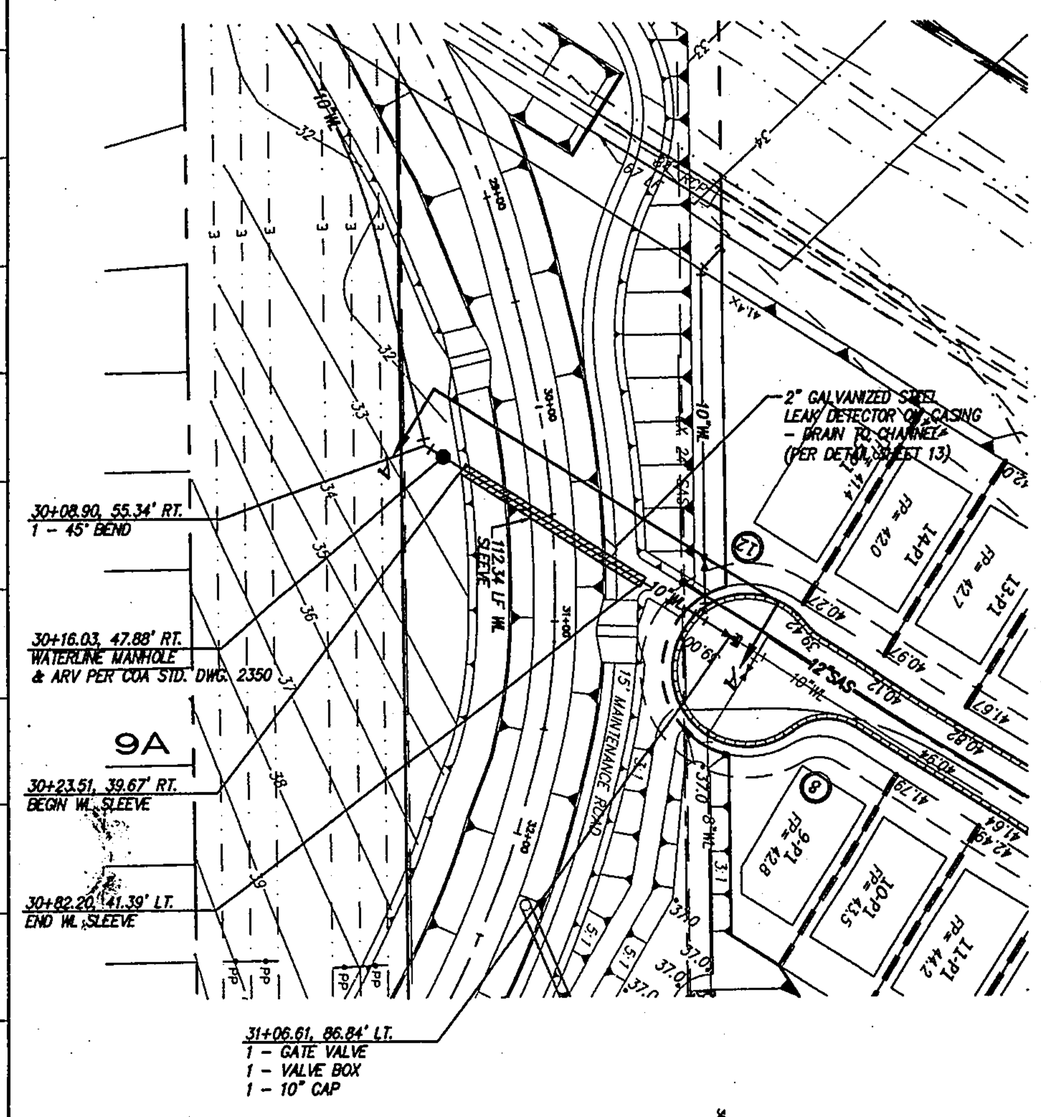

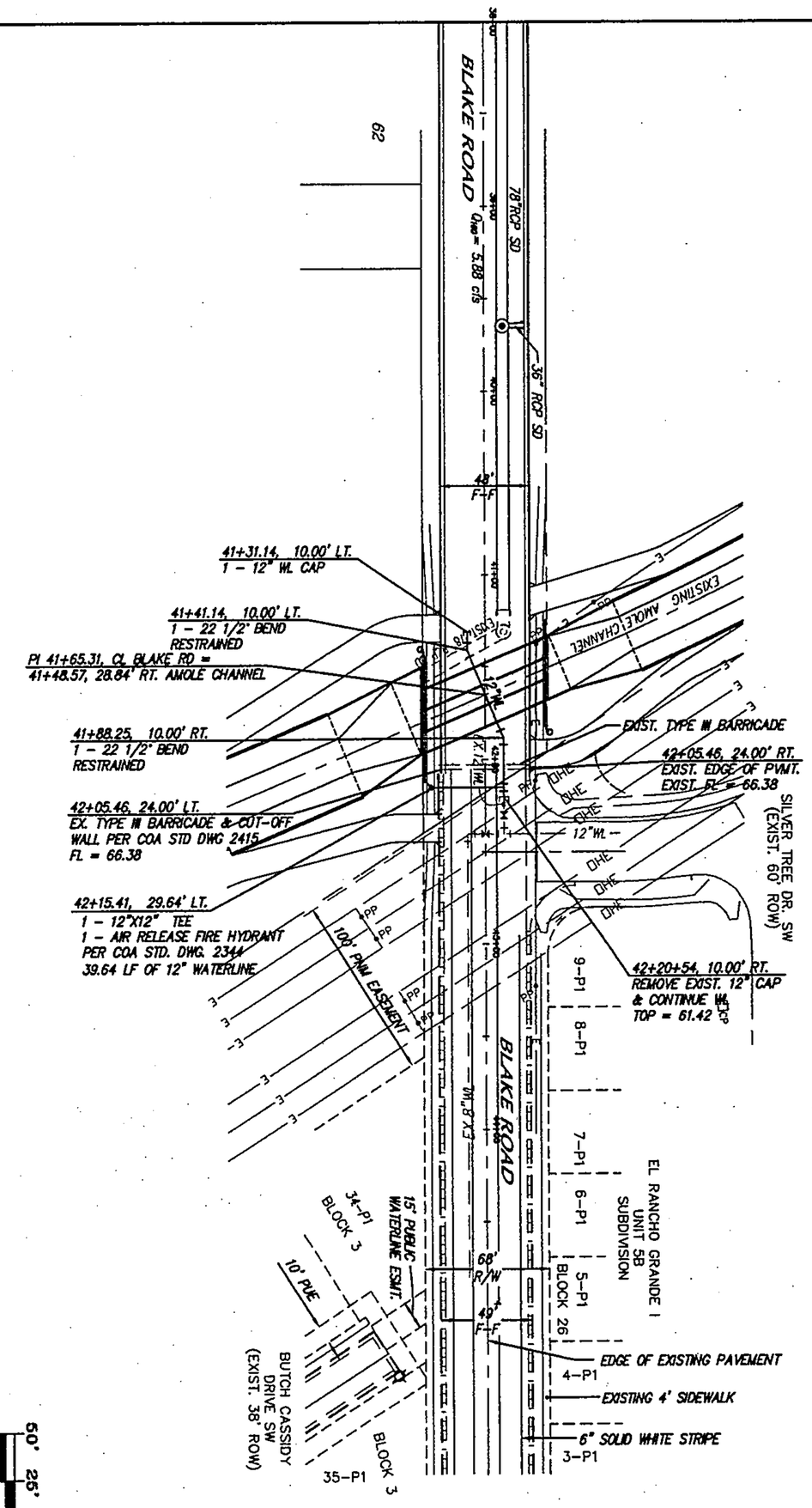

SCALE: 1" = 50'

BLAKE ROAD SW
STA. 9+82.00 TO STA. 23+87.15
SCALE: HORZ. 1" = 50'
VERT. 1" = 10'

NOTES

1. ALL STATIONING IS CENTERLINE STATIONING.
2. ALL EXCAVATION, TRENCHING AND SHORING ACTIVITIES MUST BE CARRIED-OUTIN ACCORDANCE WITH OSHA 29 CFR 1926.650 SUBPART P.

CERTIFICATE OF SUBSTANTIAL COMPLIANCE ON PLANS

I, James D. Hughes, NMPE 11674, of the firm: Mark Goodwin & Associates, P.A., a Registered Professional Engineer in the State of New Mexico, do hereby certify, to the best of my knowledge and belief, that the infrastructure installed as part of this project has been inspected by me or by a qualified person under my direct supervision, and has been constructed in accordance with the plans and specifications approved by the City Engineer and that the original design intent of the approved plans has been met, except as noted by me on the as-built construction drawings. This Certification is based on site inspections by me or personnel under my direction, and survey information provided by ALS, Inc., NMPS number 7719.

James D. Hughes NMPE 11674

JAMES D. HUGHES 11674 NEW MEXICO REGISTERED PROFESSIONAL ENGINEER

3-12-05

dmg MARK GOODWIN & ASSOCIATES, P.A.
CONSULTING ENGINEERS
P.O. BOX 90606
ALBUQUERQUE, NEW MEXICO 87199
(505) 828-2200, FAX (505) 797-9539

CITY OF ALBUQUERQUE
PUBLIC WORKS DEPARTMENT

TITLE: AMOLE CHANNEL (PHASE I)
BLAKE ROAD SW
WATERLINE IMPROVEMENTS

DESIGN REVIEW COMMITTEE: APPROVED JUL 12 2005
CITY ENGINEER: APPROVED JUL 22 2005 CITY ENGINEER

LAST DESIGN UPDATE | MO./DAY/YR. | MO./DAY/YR.

CITY PROJECT NO. 679482 | ZONE MAP NO. N-9 | SHEET 11 OF 20

NO.	DATE	REMARKS	BY

REVISIONS

DESIGN

DESIGNED BY	GJK	DATE	10/02
DRAWN BY	NHE	DATE	10/02
CHECKED BY	DMG	DATE	10/02

ENGINEER'S SEAL

JAMES D. HUGHES 11674 NEW MEXICO REGISTERED PROFESSIONAL ENGINEER

3-7-05

SURVEY INFORMATION

FIELD NOTES

NO.	BY	DATE

BENCH MARKS

STATION "TRANS" IS LOCATED 6 MI. SOUTHWEST OF DOWNTOWN ALBUQUERQUE, IN THE R.O.W. OF A PLAINS ELECTRIC CO-OP TRANSMISSION LINE. TO REACH STATION FROM INTERSECTION OF CENTRAL AVE. & 98TH ST. SW, GO SOUTH ON 98TH ST. 1.2 MI. TO JUNCTION WITH GIBSON BLVD. & SNOW VISTA BLVD., THEN SOUTHEAST ALONG SNOW VISTA AND CO-OP ELECTRIC TRANSMISSION LINE 0.85 MI. TO PYLON NUMBERED "52". STATION IS JUST EAST OF THIS POINT.
X = 354,899.45, Y = 1,471,822.67, ELEV. = 5118.37
(NAD 1927/SLD 1929)

AS BUILT INFORMATION

CONTRACTOR		
WORK STAKED BY		DATE
INSPECTOR'S ACCEPTANCE BY		DATE
FIELD VERIFICATION BY		DATE
DRAWINGS CORRECTED BY		DATE

MICRO-FILM INFORMATION

RECORDED BY	DATE
NO.	

A04009SNH/AMOLE CHANNEL PLANS/PHASE1/BLAKE-PP 07-11-05 NHE JCC

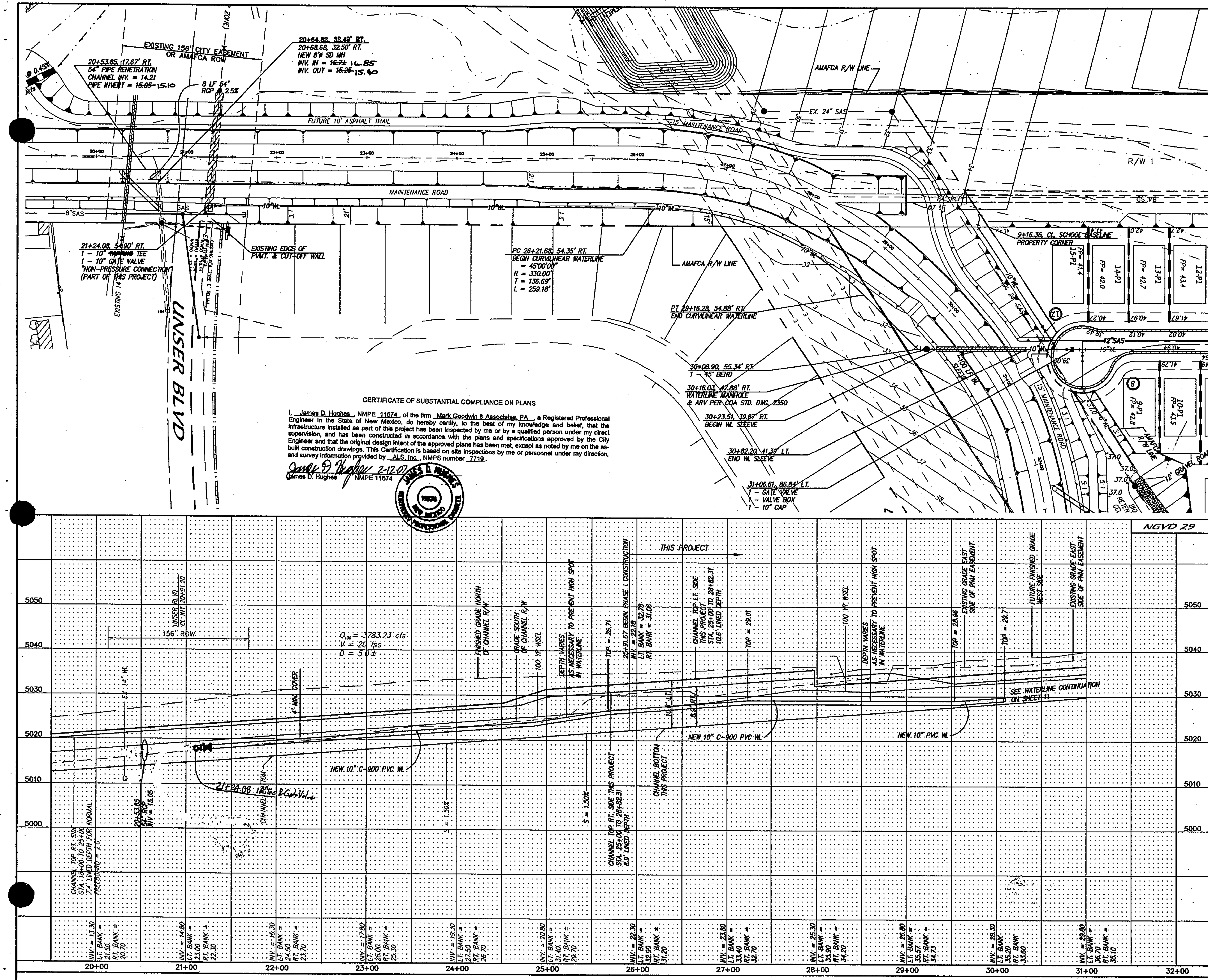

CERTIFICATE OF SUBSTANTIAL COMPLIANCE ON PLANS

I, James D. Hughes, NMPE 11674, of the firm Mark Goodwin & Associates, PA, a Registered Professional Engineer in the State of New Mexico, do hereby certify, to the best of my knowledge and belief, that the infrastructure installed as part of this project has been inspected by me or by a qualified person under my direct supervision, and has been constructed in accordance with the plans and specifications approved by the City Engineer and that the original design intent of the approved plans has been met, except as noted by me on the as-built construction drawings. This Certification is based on site inspections by me or personnel under my direction, and survey information provided by ALS, Inc., NMPS number 7719.

James D. Hughes 2-12-07
James D. Hughes NMPE 11674

NOTES

1. SEE SHEET _ OF _ FOR BORING SECTION DETAIL.

RESTRAINED JOINT LENGTH FOR BENDS, VALVES, DEAD ENDS (FT.)

PIPE SIZE	90°	45°	22.5°	11.25°	VALVE
10"	-	11'	5'	3'	72'

LENGTH OF RESTRAINED PIPE ON EACH SIDE OF THE BEND. RESTRAIN BRANCH AT FITTING ONLY MINIMUM ATTACHED PIPE LENGTH, RUN SIDE OF TEE: 10.00 FEET.

RESTRAINED JOINT LENGTHS FOR REDUCERS (FT.)

PIPE SIZE	LARGE SIDE	SMALL SIDE
10" X 6"	44'	-

RESTRAINED JOINT LENGTH FOR TEES (FT.)

PIPE SIZE	RUN	BRANCH
10"x10"x10"	15'	5'
10"x10"x6"	6'	1'

AS BUILT INFORMATION	
CONTRACTOR	
WORK STAKED BY	DATE
INSPECTOR'S ACCEPTANCE BY	DATE
FIELD VERIFICATION BY	DATE
DRAWINGS CORRECTED BY	DATE
MICRO-FILM INFORMATION	
RECORDED BY	DATE
NO.	

BENCH MARKS

STATION "TRANS" IS LOCATED 6 MI. SOUTHWEST OF DOWNTOWN ALBUQUERQUE, IN THE R.O.W. OF A PLAINS ELECTRIC CO-OP TRANSMISSION LINE. TO REACH STATION FROM INTERSECTION OF CENTRAL AVE. & 98TH ST. SW, GO SOUTH ON 98TH ST. 1.2 MI. TO JUNCTION WITH GIBSON BLVD. & SNOW VISTA BLVD. THEN SOUTHEAST ALONG SNOW VISTA AND CO-OP ELECTRIC TRANSMISSION LINE 0.85 MI. TO PYLON NUMBERED "52". STATION IS JUST EAST OF THIS POINT. X = 354,899.45, Y = 1,471,822.67, ELEV. = 5118.37 (NAD 1927/SLD 1929)

SURVEY INFORMATION			
FIELD NOTES			
NO.	BY	DATE	

ENGINEER'S SEAL

JAMES D. HUGHES, NEW MEXICO, 11674, REGISTERED PROFESSIONAL ENGINEER — 3-7-05

NO.	DATE	REMARKS	BY

REVISIONS

DESIGN			
DESIGNED BY	JDH	DATE	05/04
DRAWN BY	DER	DATE	05/04
CHECKED BY	DMG	DATE	05/04

50' 25' 0 50' 100'

SCALE: 1" = 50'

AMOLE CHANNEL
STA. 20+00.00 TO STA. 32+00.00
SCALE: HORZ. 1" = 50'
VERT. 1" = 10'

dmg MARK GOODWIN & ASSOCIATES, P.A.
CONSULTING ENGINEERS
P.O. BOX 90606
ALBUQUERQUE, NEW MEXICO 87199
(505) 828-2200, FAX (505) 797-9539

ALBUQUERQUE METROPOLITAN ARROYO FLOOD CONTROL AUTHORITY

TITLE: AMOLE CHANNEL (PHASE I) WATERLINE IMPROVEMENTS

DESIGN REVIEW COMMITTEE — APPROVED JUL 12 2005 DESIGN REVIEW COMMITTEE

CITY ENGINEER APPROVAL — APPROVED JUL 22 2005 CITY ENGINEER

MO./DAY/YR. MO./DAY/YR. LAST DESIGN UPDATE

CITY PROJECT NO. 679482 | ZONE MAP NO. N-9 | SHEET 12 OF 20

A04jobs\A4009SNH\amole channel plans\Phase1\4009-ph1-WL1.dwg\07-11-05\DER NHE JCC

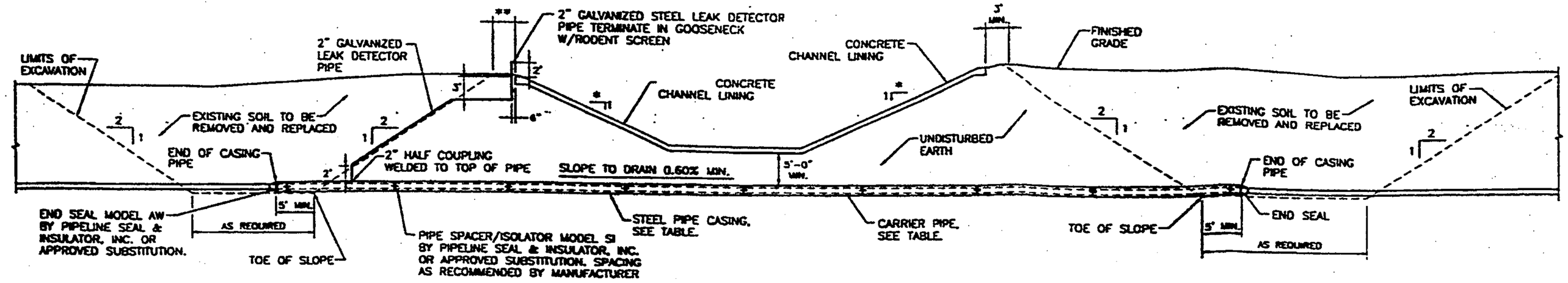

BORING SECTION AT *NEW* CHANNEL SECTION

N.T.S.

* SIDE SLOPE VARIES
** SEE NOTE 3.C

TABLE 1
CASING SIZE VERSUS CARRIER SIZE

STEEL CASING DIAMETER AND WALL THICKNESS	CARRIER PIPE (INSIDE PIPE DIAMETER)
14" SCHEDULE 30	6"
16" SCHEDULE 30	8"
18" STANDARD CLASS	10"
22" STANDARD CLASS	12"
24" SCHEDULE 20	14"
26" SCHEDULE 20	16"
30" 0.375" WALL	18"
36" 0.375" WALL	24"

TABLE 2
SIZE AND WALL THICKNESS OF SMOOTH WALL OR SPIRAL WELDED ENCASEMENT PIPE FOR BORING AND JACKING

NOMINAL DIAMETER (IN.)	NOMINAL WALL THICKNESS (IN.)
14 THROUGH 22	0.375
24 THROUGH 36	0.500
38 THROUGH 48	0.562

GENERAL NOTES

1. SPECIFICATION

   SECTION 710, BORING DRILLING AND JACKING OF THE CITY OF ALBUQUERQUE STANDARD SPECIFICATIONS SHALL APPLY.

2. LOCATION AND ALIGNMENT

   A. LOCATE UTILITY CROSSINGS AT RIGHT ANGLES TO THE FLOOD CONTROL CHANNEL ALIGNMENT WHERE POSSIBLE.

3. CLEARANCE

   A. A MINIMUM 5 FOOT CLEARANCE IS REQUIRED BETWEEN THE UNDERSIDE OF A LINED CHANNEL OR BOTTOM OF AN UNLINED CHANNEL AND THE TOP OF CASING OR RUNNEL LINING CROSSING.

   B. INVERT GRADES SHALL BE SURVEY CHECKED EVERY 20 FEET OF WELDED STEEL CASING INSTALLED BY THE BORING AND JACKING METHOD.

   C. CLEARANCE FOR PIPELINES CARRYING TRANSMITTANTS WHICH ARE FLAMMABLE, CORROSIVE, EXPANSIVE, ENERGIZED, OR UNSTABLE, PARTICULARLY IF CARRIED AT HIGH PRESSURE POTENTIAL, MUST COMPLY WITH STATE, FEDERAL AND UTILITY CODES, BUT IN NO CASE SHALL THE CLEARANCE BE LESS THAN AS SHOWN IN 3.A ABOVE.

4. BORING PITS AND OTHER OPEN CUT EXCAVATIONS

   A. NO EXCAVATION SHALL BE PERFORMED ON FLOOD CONTROL CHANNEL DIKE EMBANKMENTS.

   B. EXCAVATION SIDE SLOPES ADJACENT TO THE FLOOD CONTROL CHANNEL MUST NOT BE STEEPER THAN 2 HORIZONTAL: 1 VERTICAL.

   C. IF THE FLOOD CONTROL CHANNEL IS IN A CUT SECTION, THE TOP SLOPE LIMIT OF EXCAVATION MUST BE A MINIMUM 12 FEET HORIZONTAL FROM THE TOP EDGE OF THE CHANNEL. IF THE CHANNEL IS IN A FILL SECTION, THE TOP SLOPE LIMIT OF EXCAVATION SHALL BE CLOSER THAN THE OUTSIDE TOE OF THE FILL.

   D. IMPACT DRIVEN PILING IS PROHIBITED FROM BEING INSTALLED ADJACENT TO ANY FLOOD CONTROL CHANNEL. AUGER-CAST DRILLED PILING MAY BE CONSIDERED ON A CASE- BY-CASE BASIS.

   E. SURFACE DRAINAGE SHALL BE DIRECTED AWAY FROM OPEN CUT EXCAVATIONS.

   F. SURROUNDING TERRAIN SHALL BE RESTORED TO ITS ORIGINAL CONDITION UPON COMPLETION OF THE WORK.

   G. THOROUGHLY COMPACT BACKFILL AT THE PROPER MOISTURE CONTENT.

      1) PERFORM COMPACTION BY USE OF MECHANICAL TAMPERS WITH THE ASSISTANCE OF HAND TAMPS WHEN NECESSARY BEFORE PLACING NEXT LAYER.

      2) PLACE BACKFILL IN 6 INCH LOOSE LIFTS.

      3) COMPACT BACKFILL TO THE FOLLOWING DENSITY REQUIREMENTS:

         a) 90% OF MAXIMUM DENSITY AS DETERMINED BY ASTM D-1557 (MODIFIED PROCTOR)
            OR
         b) 95% OF MAXIMUM DENSITY AS DETERMINED BY ASTM D-698 (STANDARD PROCTOR)

4. G. (CONT.)

      4) AFTER COMPACTION, THE MOISTURE CONTENT SHALL BE WITHIN THE LIMITS OF 3 PERCENTAGE POINTS ABOVE OPTIMUM TO 2 PERCENTAGE POINTS BELOW OPTIMUM MOISTURE CONTENT.

      5) DETERMINE THE IN-PLACE MOISTURE CONTENT AND DENSITY OF THE BACKFILL AT A FREQUENCY OF NOT LESS THAN ONE SAMPLE FOR EACH 500 CUBIC YARDS OF BACKFILL PLACED. TESTING AT MORE FREQUENT INTERVALS MAY BE APPROPRIATE DEPENDENT ON JOB CONDITIONS ENCOUNTERED.

   H. DISPOSE OF ALL SURPLUS EARTH OR EXCAVATED MATERIAL OUTSIDE THE LIMITS OF THE RIGHT-OF-WAY.

   I. ANY ADJACENT ROAD OR STREET DISTURBED DURING CONSTRUCTION SHALL BE REPAIRED OR REPLACED TO A CONDITION EQUAL TO OR BETTER THAN ITS CONDITION BEFORE CONSTRUCTION.

5. ENCASEMENTS

   A. ENCASEMENTS SHALL EXTEND 5' BEYOND THE PROJECTED TOE OF ANY EXCAVATED SLOPE.

   B. ONLY CERTIFIED WELDERS ARE TO BE USED FOR JOINING OF THE WELDED CASING SECTIONS.

   C. VENTS FOR ENCASED PIPELINES CARRYING GAS OR LIQUID FUEL SHOULD BE EXTENDED TO THE RIGHT-OF-WAY LINE, OR AS OTHERWISE APPROVED BY THE ENGINEER. A VENT SHALL BE PLACED AT THE HIGH END OF SHORT ENCASEMENTS AND AT BOTH ENDS FOR ENCASEMENTS GREATER THAN 150 FEET IN LENGTH.

   D. CASING PIPE SHALL BE SO CONSTRUCTED AS TO PREVENT LEAKAGE OF ANY SUBSTANCE FROM THE CASING THROUGHOUT ITS LENGTH. PROVIDE LEAK DETECTOR SYSTEM AT THE LOW END OF THE PIPE CASING.

   E. ENCASEMENTS SHALL BE SO INSTALLED AS TO SLOPE TO ONE END.

   F. THE ANNULAR SPACE BETWEEN THE ENCASEMENT AND THE CARRIER SHALL BE SEALED AT EACH END.

6. APPURTENANCES

   DRAINS, MARKERS, SHUT-OFFS, AND MANHOLES ARE APPURTENANCES TO UTILITY INSTALLATIONS. CONTROLS FOR SUCH APPURTENANCES INCLUDE

   A. DRAINS ARE APPURTENANCES BY WHICH LIQUIDS OR HEAVY GASES MAY BE EVACUATED OR EXHAUSTED. DRAIN OUTFALL LOCATIONS ARE TO BE APPROVED BY THE ENGINEER.

   B. PLACE READILY IDENTIFIABLE AND SUITABLE MARKERS AT THE RIGHT-OF-WAY LINE WHERE IT IS CROSSED BY PIPELINES CARRYING TRANSMITTANTS WHICH ARE FLAMMABLE, CORROSIVE, EXPANSIVE, ENERGIZED, OR UNSTABLE, PARTICULARLY IF CARRIED AT HIGH PRESSURE OR POTENTIAL, EXCEPT WHERE A VENT WILL SERVE AS A MARKER. MARKERS ARE ALSO DESIRABLE FOR OTHER PIPELINES.

6. (CONT.)

   C. ACCESSIBLE EMERGENCY SHUT-OFF VALVES SHALL BE INSTALLED WITHIN EFFECTIVE DISTANCES EACH SIDE OF THE FLOOD CONTROL CHANNEL AS MUTUALLY AGREED TO BY THE ENGINEER AND THE UTILITY. WHERE PIPELINES ARE PROVIDED WITH AUTOMATIC CONTROL STATIONS AT LOCATIONS AND WITHIN DISTANCES APPROVED BY THE ENGINEER, NO ADDITIONAL VALVES SHALL BE REQUIRED. ALL VALVES LOCATED WITHIN CHANNEL RIGHTS-OF-WAY SHALL BE IN A PRECAST CONCRETE MANHOLE SECTION WITH A MANHOLE TYPE COVER.

   D. PROVIDE MANHOLES AT OPPOSITE ENDS OF ENCASEMENT AS DIRECTED BY THE PROJECT ENGINEER.
      1) TO PERMIT VISUAL INSPECTION FOR LEAKAGE;
      2) TO PERMIT PUMP OUT, OR BYPASS PUMPING IF REQUIRED FOR A SEWER LINE;
      3) TO PERMIT PULLING OF TELEPHONE OR ELECTRICAL CONDUIT FOR REPAIR OR REPLACEMENT;
      4) TO PERMIT REMOVAL AND REPLACEMENT OF PIPE SECTIONS.

   E. MANHOLES SHOULD BE DESIGNED AND LOCATED IN SUCH A MANNER THAT WILL CAUSE THE LEAST INTERFERENCE WITH CHANNEL MAINTENANCE OR OPERATION AND OTHER UTILITIES.

   F. PEDESTALS OR OTHER ABOVE GROUND UTILITY APPURTENANCES INSTALLED AS PART OF AN UNDERGROUND CABLE SYSTEM SHALL BE LOCATED AT OR NEAR THE RIGHT-OF-WAY LINE.

7. INSTALLATION STANDARDS

   A. IN ADDITION TO THE REQUIREMENTS OF SECTION 710 OF THE CITY OF ALBUQUERQUE STANDARD SPECIFICATIONS, FOR CONCRETE LINED CHANNELS, DEPENDING ON THE STABILITY OF THE SOIL ZONE BETWEEN THE SOIL ZONE BETWEEN THE CASING AND THE BOTTOM OF THE CHANNEL LINING, CORE DRILLING ALONG THE BOTTOM OF THE CHANNEL AND ADJACENT TO UNDERDRAINS MAY BE REQUIRED. THESE CORED HOLES SHOULD BE POSITIONED TO PROVIDE PRESSURE RELIEF FOR PREVENTION OF HYDRAULIC JACKING AND BUCKLING OF THE CONCRETE CHANNEL LINER.

CERTIFICATE OF SUBSTANTIAL COMPLIANCE ON PLANS

I, James D. Hughes, NMPE 11674, of the firm Mark Goodwin & Associates, P.A., a Registered Professional Engineer in the State of New Mexico, do hereby certify, to the best of my knowledge and belief, that the infrastructure installed as part of this project has been inspected by me or by a qualified person under my direct supervision, and has been constructed in accordance with the plans and specifications approved by the City Engineer and that the original design intent of the approved plans has been met, except as noted by me on the as-built construction drawings. This Certification is based on site inspections by me or personnel under my direction, and survey information provided by ALS, Inc., NMPS number 7719.

James D. Hughes NMPE 11674

AS BUILT INFORMATION
CONTRACTOR
WORK STAKED BY DATE
INSPECTED BY DATE
ACCEPTANCE BY DATE
FIELD VERIFICATION BY DATE
DRAWINGS CORRECTED BY DATE
MICRO-FILM INFORMATION
RECORDED BY DATE
NO.

BENCH MARKS
STATION "TRANS" IS LOCATED 6 MI. SOUTHWEST OF DOWNTOWN ALBUQUERQUE, IN THE R.O.W. OF A PLAINS ELECTRIC CO-OP TRANSMISSION LINE. TO REACH STATION FROM INTERSECTION OF CENTRAL AVE. & 98TH ST., SW, GO SOUTH ON 98TH ST. 1.2 MI. TO JUNCTION WITH GIBSON BLVD. & SNOW VISTA BLVD., THEN SOUTHEAST ALONG SNOW VISTA AND CO-OP ELECTRIC TRANSMISSION LINE 0.85 MI. TO PYLON NUMBERED "522". STATION IS JUST EAST OF THIS POINT.
X = 354,899.45, Y = 1,471,822.67, ELEV. = 5118.37
(NAD 1927,SID 1929)

SURVEY INFORMATION
FIELD NOTES

NO.	BY	DATE

ENGINEER'S SEAL
JAMES D. HUGHES — NEW MEXICO — REGISTERED PROFESSIONAL ENGINEER — 11674 — 7-1-05

NO.	DATE	REMARKS	BY

REVISIONS

		DATE
DESIGNED BY	GJK	10/01
DRAWN BY	MJR	10/01
CHECKED BY	DMG	10/01

dmg MARK GOODWIN & ASSOCIATES, P.A.
CONSULTING ENGINEERS
P.O. BOX 90606
ALBUQUERQUE, NEW MEXICO 87199
(505) 828-2200, FAX (505) 797-9539

ALBUQUERQUE METROPOLITAN ARROYO FLOOD CONTROL AUTHORITY

AMOLE CHANNEL

TITLE: WATER LINE DETAILS

DESIGN REVIEW COMMITTEE	CITY ENGINEER APPROVAL	LAST DESIGN UPDATE	MO./DAY/YR.	MO./DAY/YR.
APPROVED JUN 29 2005 DESIGN REVIEW COMMITTEE	APPROVED JUL 22 2005 CITY ENGINEER			

CITY PROJECT NO. 679482 | ZONE MAP NO. N-9 | SHEET 13 OF 20

A04jobs\A4009SNH\amole channel plans\Phase1\4009-Ph1-dU_3.dwg\02-22-05\DER NHE JCC

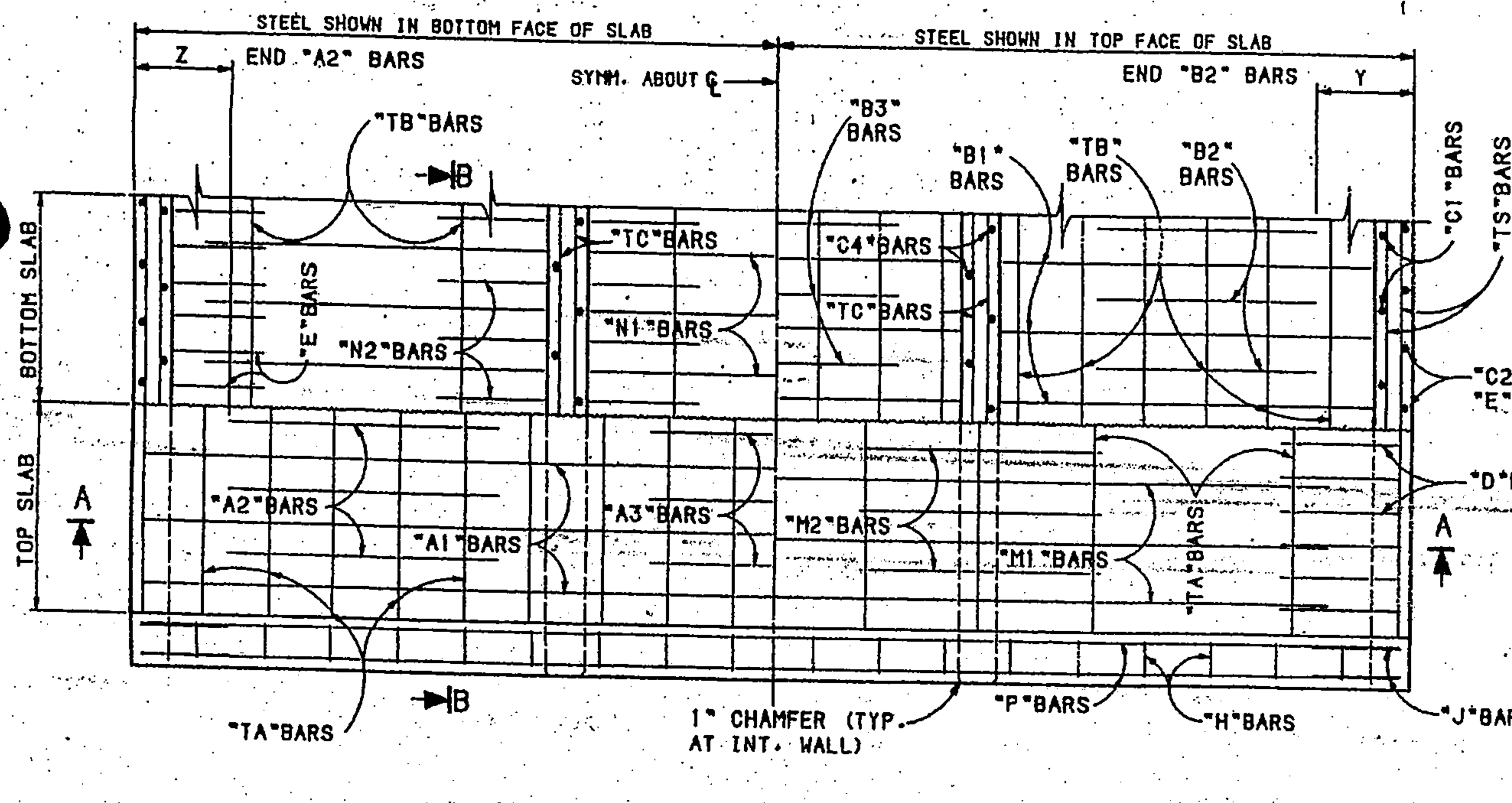

PART PLAN AND PART SECTION C-C

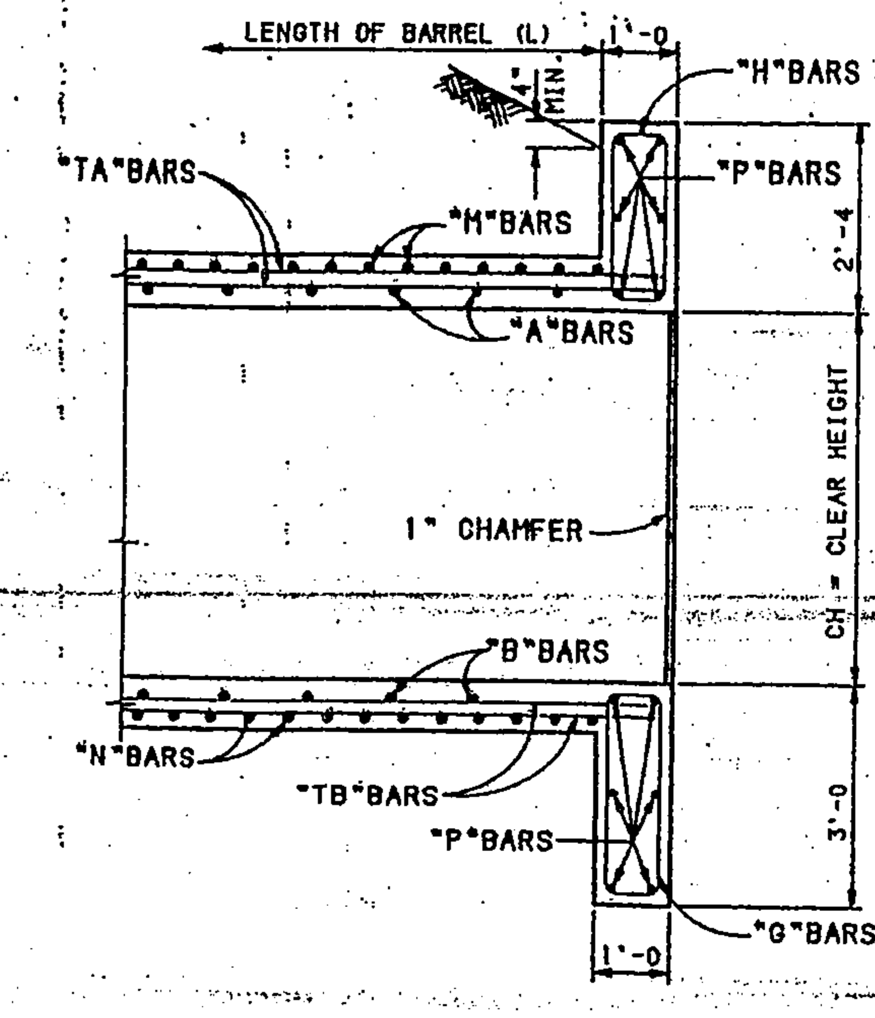

PART SECTION B-B

GENERAL NOTES

1. ALL CONCRETE SHALL BE CLASS "A". CHAMFER ALL THE EXPOSED EDGES 3/4".
2. ALL REINFORCING STEEL TO BE DEFORMED BARS, CONFORMING TO AASHTO M-31, GRADE 60. ALL DIMENSIONS REFER TO THE CENTERLINE OF BAR.
3. WHEN NECESSARY, "T" BARS MAY BE SPLICED BY LAPPING AT LEAST 20 BAR DIAMETERS. PAY WEIGHT FOR REINFORCING STEEL DOES NOT INCLUDE SPLICES. THE COST OF THE SPLICE MATERIAL IS TO BE INCLUDED IN THE UNIT PRICE BID FOR REINFORCING STEEL.
4. VOLUME OF CONCRETE = (L) x (CONCRETE QUANTITY/LIN. FT.) PLUS CONCRETE AT ENDS.
5. WEIGHT OF REINFORCING STEEL = (L) x (WEIGHT OF REINF./LIN.FT.) PLUS WEIGHT AT ENDS.
6. PLACE "TA" BARS ON "A" BARS AND "TB" BARS UNDER "B" BARS, SPACED AS SHOWN IN THE TABLE. THE REMAINING "TA" BARS, AND "TB" BARS ARE TO BE PLACED ADJACENT TO THE "D", "E", "H", AND "N" BARS AS INDICATED IN "SECTION A-A", AT 2'-0 MAX.
7. PLACE "TS" BARS NEXT TO "C1" BARS, SPACED AS SHOWN IN THE TABLE; THE REMAINING "TS" BARS SHALL BE PLACED IN SIDEWALL NEXT TO "C2", "D", AND "E" BARS. WHEN "C1" BARS ARE NOT REQUIRED, PLACE ALL "TS" BARS NEXT TO "C2", "D", AND "E" BARS.
8. PLACE "A1", "A3", "B1", "B3", "M1", AND "N1" BARS SYMMETRICAL TO THE CENTERLINE OF THE BOX. PLACE "M2" AND "N2" BARS SYMMETRICAL TO THE CENTERLINE OF THE WALLS.
9. "COVER" IS HEIGHT OF FILL FROM TOP OF THE BOX TO THE FINISHED GRADE.

DESIGN DATA

DESIGN ACCORDING TO A.A.S.H.O. SPECIFICATIONS, 1957. LIVE LOAD: H20-S16-44 & INTERSTATE ALTERNATE LOADING WEIGHT OF FILL ON TOP OF BOX: 84#/CU.FT. HORIZONTAL EARTH PRESSURE: 30#/CU.FT., 2' SURCHARGE DESIGN STRESSES: f'c = 3000 psi, fc = 1200 psi, fs = 20,000 psi, n = 10.

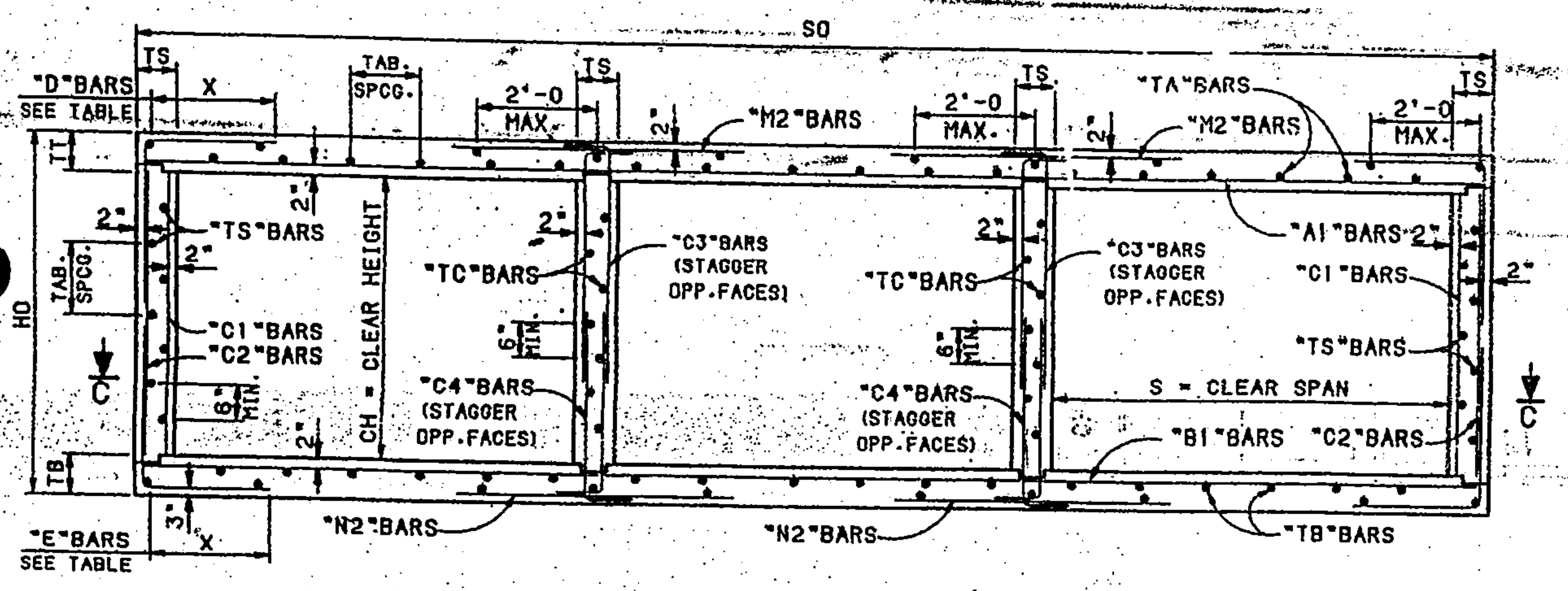

SECTION A-A

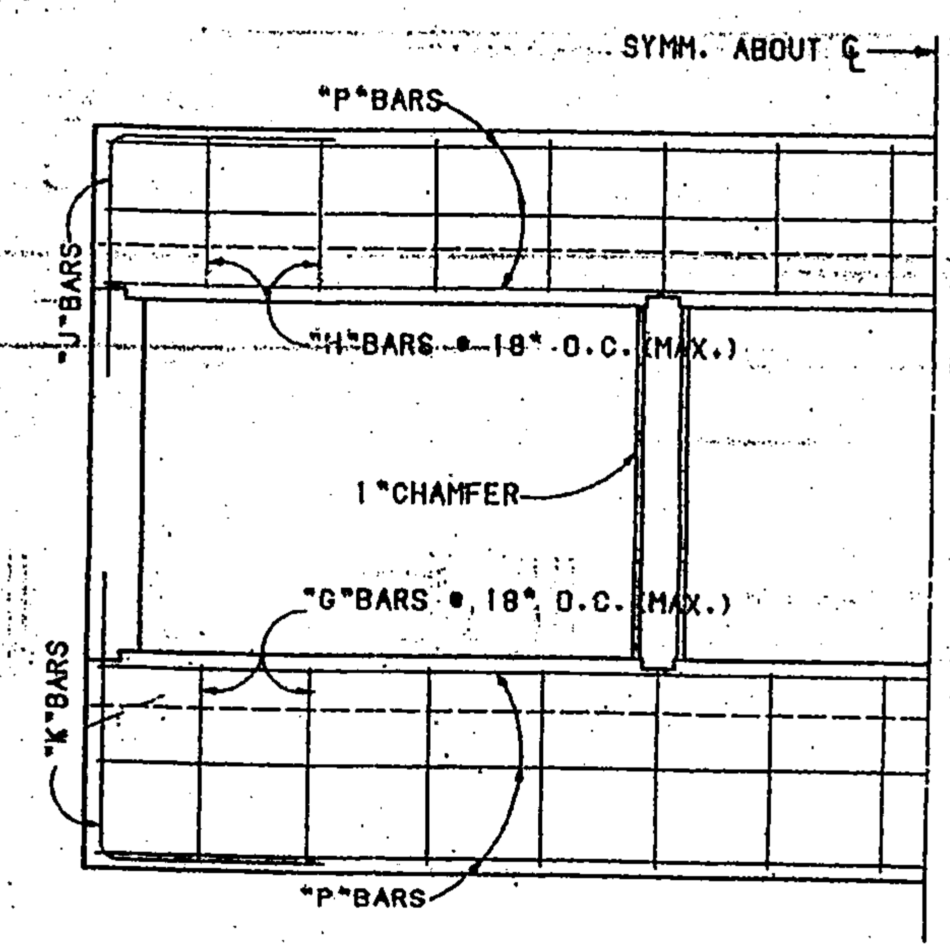

PART END ELEVATION

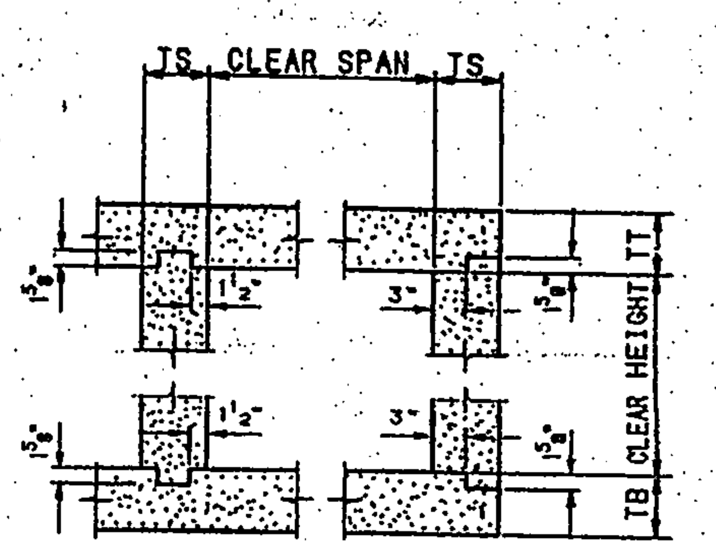

CONSTRUCTION JOINT DETAIL

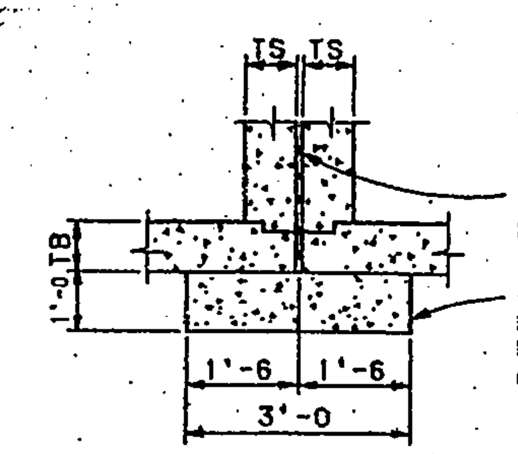

½" PREFORMED BITUMINOUS JOINT FILLER SHALL BE USED BETWEEN ADJACENT UNITS AND IT SHALL EXTEND BETWEEN BARRELS, PARAPETS, AND CUT-OFF WALLS.

THE FOUNDATION BLOCK SHALL BE PLACED IN NEAT EXCAVATION AND EXTENDED FOR THE ENTIRE LENGTH OF BARREL UNDER JOINT BETWEEN UNITS. PLACE ONE LAYER OF TAR PAPER OVER THE ENTIRE TOP SURFACE OF THE FOUNDATION BLOCK. CONCRETE QUANTITY = 0.111 CU. YDS. PER LIN. FT. OF BLOCK.

JOINT DETAIL FOR MULTIPLE UNIT BOXES

NO.	DESCRIPTION	DATE	BY
6			
5			
4			
3			
2			
1	REVISED NOTE #2	6-6-94	PH

REVISIONS (OR CHANGE NOTICES)

NEW MEXICO STATE HIGHWAY AND TRANSPORTATION DEPARTMENT

CONCRETE BOX CULVERT BARRELS TRIPLE OPENING - NORMAL ALL DESIGNS

GENERAL DATA

SERIAL GB-33 SHEET 1 OF 1

...ATES, P.A. ...EERS ...CO 87199 (505) 797-9539

AS BUILT INFORMATION: CONTRACTOR / WORK STAKED BY / INSPECTOR'S ACCEPTANCE BY / FIELD VERIFICATION BY / DRAWINGS CORRECTED BY — DATE

MICRO-FILM INFORMATION: RECORDED BY — DATE — NO.

BENCH MARKS

SURVEY INFORMATION: FIELD NOTES — NO. — BY — DATE

ENGINEER'S SEAL — 1-31-05

NO.	DATE	REMARKS	BY
		REVISIONS	

DESIGN
DESIGNED BY JDH DATE 05/04
DRAWN BY DER DATE 05/04
CHECKED BY DMG DATE 05/04

ALBUQUERQUE PUBLIC WORKS DEPARTMENT

TITLE: AMOLE CHANNEL (PHASE I) NEW MEXICO STATE HIGHWAY & TRANSPORTATION DEPT. DETAILS

APPROVED JUN 29 2005 DESIGN REVIEW COMMITTEE — APPROVED JUL 22 2005 CITY ENGINEER — LAST DESIGN UPDATE — MO./DAY/YR.

CITY PROJECT NO. 6794.82 — ZONE MAP NO. N-9 — SHEET 14 OF 20

GE#1/STANDARDS/BRIDGE/STANDARDS#1#

DETAILED BY: J.K.R. 10/93 CHECKED BY: R.A. 10/93 PLOT DATE: 10/28/93

DIMENSIONS / QUANTITIES

CLEAR SPAN	CLEAR HEIGHT	TT	TS	TB	SO	HO	Y	Z	PER L.F. OF BARREL: REINFORCING STEEL POUNDS PER L.F.	PER L.F. OF BARREL: CONCRETE CU. YDS. PER L.F.	AT ONE END *: REINFORCING STEEL POUNDS	AT ONE END *: CONCRETE CU. YDS.
4	2	7"	6"	6½"	14'-0	3'-1½	----	----	115.8	0.731	337	2.91
	3	7"	6"	6½"	14'-0	4'-1½	----	----	122.8	0.806	347	2.99
	4	7"	6"	6½"	14'-0	5'-1½	----	----	124.3	0.880	355	3.06
6	2	7½"	6"	7"	20'-0	3'-2½	1'-0	2"	185.4	1.043	472	4.10
	3	7½"	6"	7"	20'-0	4'-2½	1'-0	2"	191.0	1.117	460	4.17
	4	7½"	6"	7"	20'-0	5'-2½	1'-0	2"	197.8	1.191	493	4.25
	5	7½"	6"	7"	20'-0	6'-2½	1'-0	2"	210.4	1.285	505	4.32
	6	7½"	6"	7"	20'-0	7'-2½	1'-0	2"	227.9	1.339	550	4.40
8	4	8"	6"	8½"	26'-0	5'-4½	1'-0	2"	292.4	1.620	790	5.43
	5	8"	6"	8½"	26'-0	6'-4½	1'-0	2"	314.7	1.694	804	5.51
	6	8"	6"	8½"	26'-0	7'-4½	1'-0	2"	333.4	1.769	816	5.59
	7	8"	7"	8½"	26'-4	8'-4½	1'-0	2"	347.3	1.946	882	5.82
	8	8"	8"	8½"	26'-8	9'-4½	1'-0	2"	359.3	2.148	905	6.07
10	4	9"	6½"	9½"	32'-2	5'-6½	1'-3	2"	370.3	2.158	1144	6.68
	5	9"	6½"	9½"	32'-2	6'-6½	1'-3	2"	382.5	2.238	1157	6.76
	6	9"	6"	9½"	32'-0	7'-6½	1'-3	2"	385.0	2.272	1201	6.77
	7	9"	7"	9½"	32'-4	8'-6½	1'-3	2"	411.8	2.451	1223	7.00
	8	9"	8"	9½"	32'-8	9'-6½	1'-3	2"	430.0	2.655	1262	7.26
	9	9"	8"	10"	32'-8	10'-7	1'-3	2"	455.1	2.804	1294	7.37
	10	9"	9"	10"	33'-0	11'-7	1'-3	2"	466.0	3.046	1318	7.66
	11	9"	9"	10"	33'-0	12'-7	1'-3	2"	487.3	3.157	1338	7.82
	12	9"	9"	10"	33'-0	13'-7	1'-3	2"	516.1	3.268	1363	8.00
12	6	10"	6½"	11"	38'-2	7'-9	2"	2"	480.7	2.955	1720	8.02
	8	10"	8"	11"	38'-8	9'-9	2"	2"	524.6	3.296	1803	8.44
	10	10"	9"	11"	39'-0	11'-9	2"	2"	574.9	3.639	1834	8.85
	12	10"	9"	11"	39'-0	13'-9	2"	2"	609.6	3.861	1898	9.18
14	8	11½"	8"	12"	44'-8	9'-11½	2"	2"	711.1	4.030	2464	9.63
	10	11½"	9"	12"	45'-0	11'-11½	2"	2"	730.2	4.375	2519	10.03
	12	11½"	9"	12½"	45'-0	14'-0	2"	2"	809.9	4.667	2521	10.37
	14	11½"	10"	12½"	45'-4	16'-0	2"	2"	846.8	5.086	2646	10.96

REINFORCING BARS

CLEAR SPAN	CLEAR HEIGHT	"A1" SIZE	"A1" LENGTH	"A2" SIZE	"A2" LENGTH	"A3" SIZE	"A3" LENGTH	"A" SPACING	"B1" SIZE	"B1" LENGTH	"B2" SIZE	"B2" LENGTH	"B3" SIZE	"B3" LENGTH	"B" SPACING
4	2	#5	13'-9	--	NONE	--	NONE	6"	#4	13'-9	--	NONE	--	NONE	12"
	3	#5	13'-9	--	NONE	--	NONE	6"	#4	13'-9	--	NONE	--	NONE	12"
	4	#5	13'-9	--	NONE	--	NONE	6"	#4	13'-9	--	NONE	--	NONE	13"
6	2	#5	18'-6	#6	5'-9	#5	5'-0	12"	#4	19'-9	#4	5'-0	--	NONE	14"
	3	#5	18'-6	#6	5'-9	#5	5'-0	12"	#4	19'-9	#4	5'-0	--	NONE	14"
	4	#5	18'-6	#6	5'-9	#5	5'-0	12"	#4	19'-9	#4	5'-0	--	NONE	14"
	5	#5	18'-6	#6	5'-9	#5	5'-6	12"	#4	19'-9	#4	5'-6	--	NONE	13"
	6	#5	18'-6	#6	5'-9	#5	5'-9	11"	#4	19'-9	#4	5'-9	--	NONE	12"
8	4	#5	25'-9	#7	7'-9	#6	6'-3	12"	#4	25'-9	#4	6'-6	--	NONE	11"
	5	#5	25'-9	#7	7'-9	#6	6'-3	12"	#4	25'-9	#4	6'-6	--	NONE	10½"
	6	#5	25'-9	#7	7'-9	#6	6'-3	11½"	#4	25'-9	#4	6'-6	--	NONE	10"
	7	#5	26'-0	#7	8'-0	#6	6'-6	12"	#5	26'-0	#4	6'-6	--	NONE	14"
	8	#5	26'-3	#8	8'-0	#7	6'-6	15"	#5	26'-3	#4	6'-6	--	NONE	14"
10	4	#6	29'-6	#6	9'-6	#5	7'-3	12"	#4	32'-0	#4	6'-9	--	NONE	9"
	5	#6	29'-6	#6	9'-6	#5	7'-6	12"	#4	32'-0	#4	7'-0	--	NONE	9"
	6	#6	29'-6	#7	9'-6	#6	8'-0	14"	#4	31'-9	#5	7'-6	--	NONE	9"
	7	#6	30'-0	#8	9'-6	#5	8'-0	12"	#5	32'-0	#5	7'-0	--	NONE	14"
	8	#6	30'-3	#6	9'-6	#5	8'-0	12"	#5	32'-3	#4	7'-0	--	NONE	12"
	9	#6	30'-3	#6	9'-6	#5	8'-0	12"	#5	32'-3	#4	7'-0	--	NONE	12"
	10	#6	30'-6	#6	9'-6	#5	8'-0	12"	#5	32'-9	#4	7'-0	--	NONE	12"
	11	#6	30'-6	#6	9'-6	#5	8'-0	12"	#5	32'-9	#4	7'-0	--	NONE	11½"
	12	#6	30'-6	#5	9'-6	#5	8'-0	11"	#5	32'-9	#4	7'-0	--	NONE	11"
12	6	#5	33'-0	#8	11'-9	#7	10'-0	14"	#4	30'-6	#7	11'-6	#4	8'-0	14"
	8	#5	32'-6	#8	13'-0	#7	10'-3	14"	#4	30'-6	#7	11'-6	#4	6'-3	14"
	10	#5	32'-0	#8	13'-0	#7	10'-6	14"	#4	30'-9	#7	11'-6	#5	6'-6	14"
	12	#5	31'-9	#8	13'-0	#7	10'-6	14"	#4	30'-9	#7	11'-6	#5	6'-9	14"
14	8	#5	40'-0	#6	13'-0	#5	10'-6	9"	#5	40'-0	#5	12'-0	--	NONE	9"
	10	#5	40'-0	#6	13'-3	#5	10'-9	9"	#5	40'-0	#5	12'-9	--	NONE	9"
	12	#5	39'-9	#6	13'-6	#5	11'-0	9"	#6	40'-0	#5	12'-0	--	NONE	12"
	14	#5	39'-6	#6	14'-0	#5	11'-3	9"	#6	40'-0	#5	12'-0	--	NONE	10½"

CLEAR SPAN	CLEAR HEIGHT	"C1" SIZE	"C1" SPACING	"C2" SIZE	"C2" SPACING	C3/C4 SIZE	C3 LENGTH	C4 LENGTH	"C" SPACING	"M1" SIZE	"M1" LENGTH	"M2" SIZE	"M2" LENGTH	"M" SPACING	"N1" SIZE	"N1" LENGTH	"N2" SIZE	"N2" LENGTH	"N" SPACING
4	2	NONE		NONE		#4	2'-3	2'-3	12"	#4	12'-6	#4	3'-9	12"	#4	12'-6	#4	3'-3	18"
	3	NONE		NONE		#4	2'-9	2'-9	12"	#4	12'-6	#4	3'-9	12"	#4	12'-6	#4	3'-3	18"
	4	NONE		NONE		#4	3'-3	3'-3	13"	#4	12'-6	#4	3'-9	13"	#4	12'-6	#4	3'-3	18"
6	2	NONE		NONE		#4	2'-3	2'-3	9"	#4	18'-6	#6	5'-0	18"	#4	18'-6	#6	7'-0	12"
	3	NONE		NONE		#4	2'-9	2'-9	9"	#4	18'-6	#6	5'-0	18"	#4	18'-6	#6	7'-0	12"
	4	NONE		NONE		#4	3'-3	3'-3	9"	#4	18'-6	#6	5'-0	18"	#4	18'-6	#6	7'-0	12"
	5	NONE		NONE		#4	4'-3	3'-3	9"	#4	18'-6	#6	5'-3	18"	#4	18'-6	#6	7'-0	13"
	6	NONE		NONE		#4	5'-3	3'-3	9"	#4	18'-6	#6	5'-6	18"	#4	18'-6	#6	7'-3	14"
8	4	NONE		NONE		#5	4'-3	3'-0	10"	#4	24'-0	#6	6'-3	12"	#4	24'-0	#6	6'-0	11"
	5	NONE		NONE		#5	5'-3	3'-0	10"	#4	25'-6	#6	6'-9	12"	#4	25'-6	#6	6'-9	10½"
	6	NONE		NONE		#5	6'-3	3'-0	10"	#4	25'-6	#6	7'-9	12"	#4	25'-6	#6	7'-9	11"
	7	#4	18"	NONE		#5	7'-3	3'-0	12"	#4	25'-6	#6	8'-6	12"	#4	25'-6	#7	8'-6	14"
	8	#4	18"	#5	13"	#5	8'-3	3'-0	14"	#4	25'-6	#7	9'-6	13"	#4	25'-6	#7	9'-6	13"
10	4	NONE		NONE		#5	4'-3	3'-0	10½"	#5	30'-0	#6	7'-0	10½"	#5	30'-0	#6	6'-0	10½"
	5	NONE		NONE		#5	5'-0	3'-3	10½"	#5	30'-0	#6	7'-0	10½"	#5	30'-0	#6	6'-0	10½"
	6	NONE		NONE		#5	5'-9	3'-6	12"	#4	30'-0	#7	7'-6	12"	#4	30'-0	#7	6'-3	12"
	7	NONE		NONE		#5	7'-3	3'-0	12"	#5	30'-0	#7	7'-3	12"	#5	30'-0	#7	6'-3	12"
	8	NONE		#5	13"	#5	8'-3	3'-0	12"	#5	29'-6	#7	7'-3	12"	#5	29'-3	#7	6'-3	12"
	9	#4	13"	#5	13"	#5	9'-3	3'-0	12"	#5	29'-0	#7	7'-3	12"	#5	28'-3	#7	6'-6	12"
	10	#4	13"	#5	12"	#5	10'-3	3'-0	15"	#5	28'-9	#7	7'-3	12"	#5	27'-9	#7	6'-6	12"
	11	#4	12"	#5	12"	#5	11'-3	3'-0	15"	#5	28'-9	#7	7'-3	12"	#5	27'-9	#7	6'-9	12"
	12	#5	14"	#5	11"	#5	12'-3	3'-0	11"	#4	28'-9	#7	7'-3	11"	#4	27'-3	#7	6'-9	11"
12	6	NONE		NONE		#5	6'-0	3'-6	12"	#5	37'-3	#8	7'-6	12"	#4	37'-3	#8	5'-9	12"
	8	#4	18"	#6	15"	#5	8'-0	3'-6	12"	#5	37'-3	#8	7'-6	12"	#4	37'-3	#8	6'-0	12"
	10	#4	15"	#6	12"	#5	10'-0	3'-6	12"	#5	37'-0	#8	7'-6	12"	#5	37'-0	#8	6'-0	12"
	12	#5	18"	#6	12"	#5	12'-0	3'-6	12"	#5	36'-9	#8	7'-6	12"	#5	36'-9	#8	6'-0	12"
14	8	#4	18"	NONE		#6	8'-9	3'-6	15"	#6	40'-0	#8	8'-3	12"	#7	40'-0	#8	7'-3	12"
	10	#4	18"	#5	11"	#6	10'-9	3'-6	11"	#5	40'-0	#8	8'-3	11"	#6	40'-0	#8	7'-3	11"
	12	#4	12"	#5	9"	#6	12'-9	3'-6	9"	#5	40'-0	#7	8'-3	9"	#5	40'-0	#7	7'-3	9"
	14	#5	12"	#6	10½"	#6	14'-9	3'-6	10½"	#5	40'-0	#8	8'-3	10½"	#5	40'-0	#8	7'-3	10½"

CLEAR SPAN	CLEAR HEIGHT	"D" SIZE	"D" LENGTH	"D" "X"	"D" SPACING	"E" SIZE	"E" LENGTH	"E" "X"	"E" SPACING	"TA" NO.	"TA" SIZE	"TA" SPACING	"TB" NO.	"TB" SIZE	"TB" SPACING	"TC" NO.	"TC" SIZE	"TC" SPACING	"TS" NO.	"TS" SIZE	"TS" SPACING	G.H NO. OF EA. AT 1 END
4	2	#5	3'-6	1'-6	12"	#4	3'-6	1'-6	12"	19	#4	16"	19	#4	16"	6	#4	18"	4	#4	18"	9
	3	#5	4'-0	1'-6	12"	#4	4'-0	1'-6	12"	19	#4	16"	19	#4	16"	8	#4	18"	6	#4	15"	9
	4	#5	4'-6	1'-6	13"	#4	4'-6	1'-6	13"	19	#4	16"	19	#4	16"	10	#4	18"	6	#4	18"	9
6	2	#6	3'-9	1'-6	13"	#5	3'-6	1'-6	15"	31	#4	16"	25	#4	18"	6	#4	18"	4	#4	18"	12
	3	#5	4'-3	1'-6	12"	#4	4'-0	1'-6	12"	31	#4	16"	25	#4	18"	8	#4	18"	6	#4	15"	12
	4	#6	5'-0	1'-6	18"	#5	4'-3	1'-6	18"	31	#4	16"	25	#4	18"	10	#4	18"	6	#4	18"	12
	5	#6	5'-6	1'-6	15"	#5	4'-6	1'-6	15"	31	#4	16"	25	#4	18"	14	#4	18"	8	#4	18"	12
	6	#7	6'-3	1'-6	18"	#6	5'-0	1'-6	18"	31	#4	16"	25	#4	18"	16	#4	18"	10	#4	15"	12
8	4	#6	4'-3	1'-6	11"	#5	5'-3	1'-6	11"	43	#4	14"	34	#4	16"	10	#4	18"	6	#4	18"	18
	5	#8	4'-8	1'-6	10½"	#5	6'-0	1'-6	10½"	43	#4	14"	34	#4	16"	14	#4	18"	8	#4	16"	18
	6	#6	5'-6	1'-6	10½"	#5	5'-6	1'-6	10½"	43	#4	14"	34	#4	16"	16	#4	18"	10	#4	15"	18
	7	#7	6'-9	1'-6	14"	#6	5'-6	1'-6	14"	40	#4	17"	34	#4	16"	18	#4	18"	18	#4	18"	18
	8	#7	4'-6	1'-6	13"	#6	4'-3	1'-6	13"	37	#4	16"	34	#4	16"	22	#4	18"	22	#4	18"	18
10	4	#6	4'-3	1'-6	10"	#5	5'-3	1'-6	10"	49	#4	16"	43	#4	18"	10	#4	18"	6	#4	18"	21
	5	#6	4'-6	1'-6	10"	#5	6'-0	1'-6	10"	49	#4	16"	43	#4	18"	14	#4	18"	8	#4	16"	21
	6	#7	5'-6	1'-6	12"	#6	6'-3	1'-6	12"	49	#4	16"	43	#4	18"	18	#4	18"	10	#4	18"	21
	7	#7	6'-9	1'-9	12"	#6	6'-9	1'-9	12"	49	#4	16"	43	#4	18"	18	#4	~~18"~~ (9")	10	#4	~~18"~~ (9")	21
	8	#7	6'-0	2'-3	12"	#7	6'-0	2'-3	15"	49	#4	16"	43	#4	18"	22	#4	18"	12	#4	17"	21
	9	#7	6'-3	2'-6	12"	#7	6'-6	2'-9	15"	49	#4	16"	43	#4	18"	24	#4	18"	24	#4	18"	21
	10	#7	6'-6	2'-9	12"	#7	7'-0	3'-3	12"	49	#4	16"	43	#4	18"	26	#4	18"	26	#4	18"	21
	11	#7	6'-6	2'-9	12"	#7	7'-0	3'-3	12"	49	#4	16"	46	#4	18"	30	#4	18"	30	#4	18"	21
	12	#7	6'-6	2'-9	11"	#7	7'-3	3'-6	11"	49	#4	16"	46	#4	18"	32	#4	18"	32	#4	18"	21
12	6	#8	5'-6	1'-6	13"	#7	6'-0	1'-6	13"	64	#4	15"	52	#4	18"	16	#4	18"	10	#4	15"	24
	8	#8	4'-9	1'-8	15"	#8	4'-9	1'-8	15"	64	#4	15"	52	#4	18"	22	#4	18"	22	#4	18"	24
	10	#8	5'-0	1'-11	12"	#7	5'-0	1'-11	12"	64	#4	15"	52	#4	18"	26	#4	18"	26	#4	18"	24
	12	#8	5'-3	2'-2	12"	#8	5'-3	2'-2	12"	61	#4	15"	52	#4	18"	32	#4	18"	32	#4	18"	24
14	8	#8	9'-6	3'-0	12"	#7	8'-3	3'-3	12"	79	#4	13"	64	#4	16"	22	#4	18"	22	#4	18"	30
	10	#8	8'-0	3'-3	11"	#7	8'-0	3'-3	11"	79	#4	13"	64	#4	16"	26	#4	18"	26	#4	18"	30
	12	#7	7'-0	3'-3	9"	#7	7'-3	3'-3	9"	79	#4	13"	64	#4	16"	32	#4	18"	32	#4	18"	30
	14	#8	7'-0	3'-3	10½"	#8	7'-0	3'-3	10½"	79	#4	13"	64	#4	16"	38	#4	18"	38	#4	18"	30

NOTE: QUANTITIES "AT ONE END" INCLUDE PARAPET, CUT-OFF WALL, AND BARREL BEYOND LENGTH "L". WINGWALL QUANTITIES ARE NOT INCLUDED.

"P" BARS						
CLEAR SPAN	4'	6'	8'	10'	12'	14'
SIZE	#5	#5	#6	#7	#8	#9

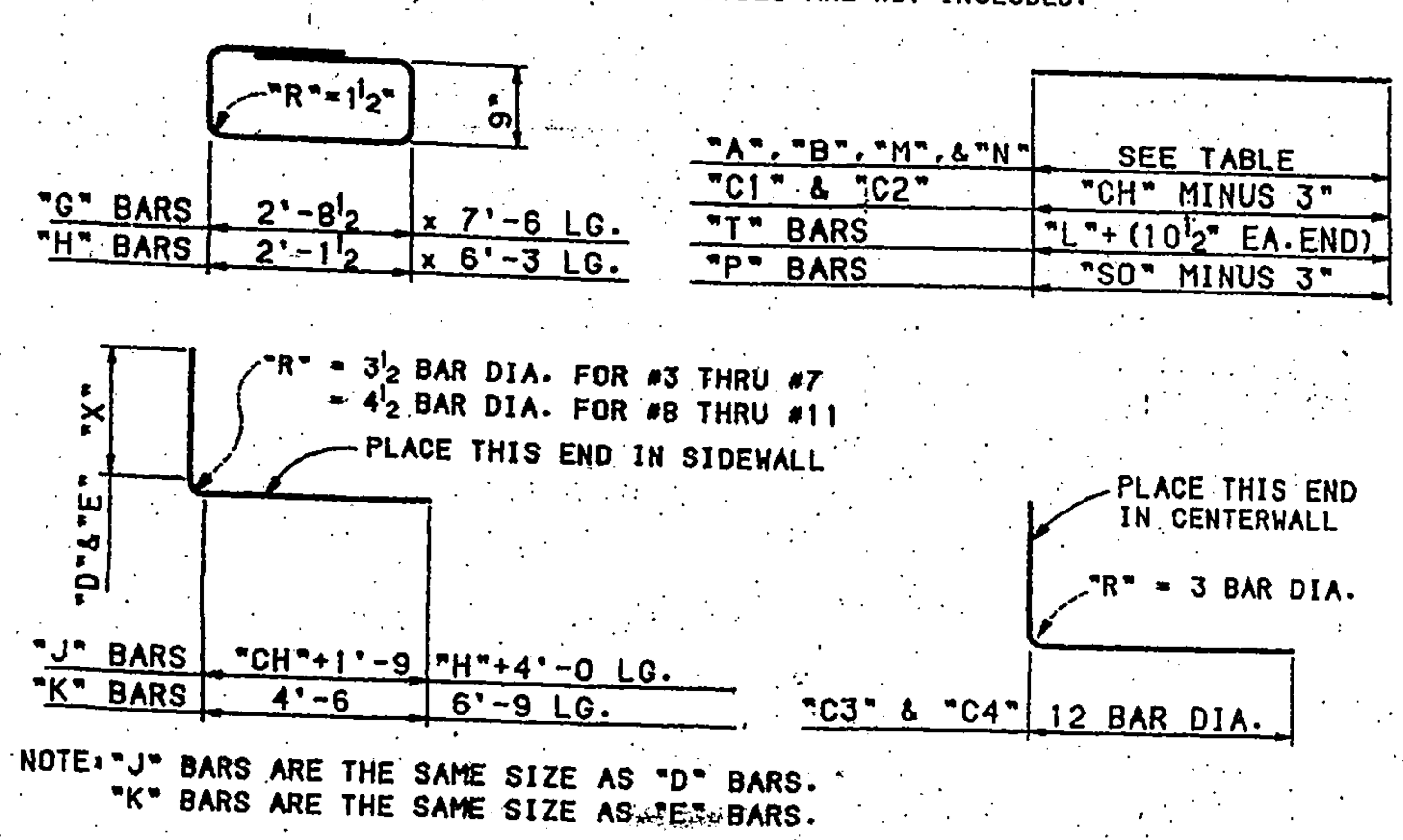

NOTE: "J" BARS ARE THE SAME SIZE AS "D" BARS.
"K" BARS ARE THE SAME SIZE AS "E" BARS.

REINFORCING STEEL DIAGRAM

NUMBER OF BARS REQUIRED

"A1", "A3", "B1", "B3", "M1", & "N1" BARS: 12L ÷ SPACING
"A2", "B2", "C2", "D", "E", "M2", & "N2" BARS: 24L ÷ SPACING
"P" BARS: 12 FOR CUT-OFF & PARAPET AT EACH END
"C1" BARS: (24L ÷ SPACING) PLUS 2 AT EACH END
"C3" & "C4" BARS: (48L ÷ SPACING) PLUS 4 AT EACH END
"J" & "K" BARS: 4 OF EACH AT EACH END (FOR PARAPET AND CUT-OFF WALL)
OTHER BARS: SEE TABLE
"L" = LENGTH OF BARREL IN FEET
"CH" = CLEAR HEIGHT

NOTE: REFER TO SERIAL CB-33 SHEET 1 OF 5 FOR CONCRETE BOX CULVERT DETAILS, DESIGN DATA, AND GENERAL NOTES.

NO.	DESCRIPTION	DATE	BY
1			
2			
3			
4			
5			
6			

REVISIONS (OR CHANGE NOTICES)

NEW MEXICO STATE HIGHWAY AND TRANSPORTATION DEPARTMENT

CONCRETE BOX CULVERT BARRELS
TRIPLE OPENING - NORMAL
DESIGN No. 1
0' TO 5' COVER

SERIAL CB-33 SHEET 2 OF 5

DESIGNED BY: H.T 1/61 CHECKED BY: S.J.M. 10/93
DETAILED BY: J.A.K. 10/93 CHECKED BY: R.A. 10/93
PLOT DATE: 10/28/93

BRIDGE#1/STANDARDS/BRIDGE/STANDARDS818A

F:\A040JOBS\A4009SNH\amole channel plans\Phase1\

AS BUILT INFORMATION: CONTRACTOR / WORK STAKED BY / DATE / INSPECTOR'S ACCEPTANCE BY / DATE / FIELD VERIFICATION BY / DATE / DRAWINGS CORRECTED BY / DATE

MICRO-FILM INFORMATION: RECORDED BY / DATE / NO.

BENCH MARKS

SURVEY INFORMATION: FIELD NOTES / NO. / BY / DATE

ENGINEER'S SEAL

REVISIONS: NO. / DATE / REMARKS / BY

DESIGN: DESIGNED BY JDH DATE 05/04; DRAWN BY DER DATE 05/04; CHECKED BY DMG DATE 05/04

CITY OF ALBUQUERQUE PUBLIC WORKS DEPARTMENT

TITLE: AMOLE CHANNEL (PHASE I) NEW MEXICO STATE HIGHWAY & TRANSPORTATION DEPT. DETAILS

DESIGN REVIEW COMMITTEE: APPROVED JUN 29 2005
CITY ENGINEER APPROVAL: APPROVED JUL 22 2005 CITY ENGINEER

LAST DESIGN UPDATE: MO./DAY/YR.

CITY PROJECT NO. 679482 | ZONE MAP NO. N-9 | SHEET 15 OF 20

CLEAR SPAN	CLEAR HEIGHT	DIMENSION A	DIMENSION Q	REINFORCING BARS ~ ONE SKEW END "aa" & "bb" "aa" SIZE	"bb" SIZE	x	B	C	SPACING	"mm" & "nn" "mm" SIZE	"nn" SIZE	x	B	C	SPACING	"p" SIZE	"g","h" NO. OF EA.
4	3	-	-	-	-	-	-	-	-	-	-	-	-	-	-	-	-
	4	-	-	-	-	-	-	-	-	-	-	-	-	-	-	-	-
6	2	1'-4"	1'-11"	7	5	15	19'-9"	1'-3 1/2"	9"	6	6	15	19'-9"	1'-2 3/4"	8 1/2"	5	15
	3	1'-4"	1'-11"	7	5	15	19'-9"	1'-3 1/2"	9"	6	6	15	19'-9"	1'-2 3/4"	8 1/2"	5	15
	4	1'-4"	1'-11"	7	5	15	19'-9"	1'-3 1/2"	9"	6	6	15	19'-9"	1'-2 3/4"	8 1/2"	5	15
	5	1'-4"	1'-11"	7	5	15	19'-9"	1'-3 1/2"	9"	6	6	15	19'-9"	1'-2 3/4"	8 1/2"	5	15
	8	1'-4"	1'-11"	7	5	15	19'-9"	1'-3 1/2"	9"	6	6	15	19'-9"	1'-2 3/4"	8 1/2"	5	15
8	4	1'-10"	1'-10"	6	5	28	25'-9"	10 1/2"	6"	6	6	26	25'-9"	1'-11 1/4"	6 1/2"	7	21
	5	1'-10"	1'-10"	6	5	28	25'-9"	10 1/2"	6"	6	6	26	25'-9"	1'-11 1/4"	6 1/2"	7	21
	6	2'-1"	1'-10"	6	5	30	25'-9"	10'-9 1/2"	5 1/2"	6	6	26	25'-9"	1'-11 1/4"	6 1/2"	7	21
	7	1'-11"	1'-11"	6	5	28	26'-1"	10 1/2"	6"	6	6	26	26'-1"	1'-11 1/4"	6 1/2"	7	21
	8	-	-	-	-	-	-	-	-	-	-	-	-	-	-	-	-
10	4	2'-2"	1'-11"	8	7	20	31'-9"	1'-0 1/2"	10 1/2"	7	7	30	31'-9"	1'-0"	7"	8	24
	5	2'-1"	2'-0"	8	7	20	31'-11"	1'-6"	10 1/2"	8	8	22	31'-11"	1'-4 1/2"	9 1/2"	8	24
	6	2'-0"	2'-0"	8	7	20	31'-9"	1'-6"	10 1/2"	8	8	25	31'-9"	1'-3 1/2"	9"	8	24
	7	2'-3"	2'-4"	8	7	20	32'-1"	1'-6"	10 1/2"	8	8	23	32'-1"	1'-3 1/2"	9"	8	24
	8	2'-4"	2'-6"	8	7	20	32'-5"	1'-6"	10 1/2"	8	8	23	32'-5"	1'-3 1/2"	9"	8	24
	9	2'-4"	2'-5"	8	7	20	31'-7"	1'-6"	10 1/2"	8	8	23	31'-7"	1'-3 1/2"	9"	8	24
	10	2'-6"	2'-8"	8	7	20	32'-9"	1'-6"	10 1/2"	8	8	23	32'-9"	1'-3 1/2"	9"	8	24
	11	-	-	-	-	-	-	-	-	-	-	-	-	-	-	-	-
	12	2'-7"	2'-6"	7	7	23	32'-9"	1'-3 1/2"	9"	8	8	23	32'-9"	1'-3 1/2"	9"	8	24
12	6	-	-	-	-	-	-	-	-	-	-	-	-	-	-	-	-
	8	2'-7"	2'-8"	8	7	26	38'-5"	1'-4 1/2"	9 1/2"	9	9	26	38'-5"	1'-4 1/2"	9 1/2"	9	30
	10	1'-11"	2'-0"	8	7	27	38'-9"	1'-4 1/2"	9 1/2"	9	9	27	38'-9"	1'-4 1/2"	9 1/2"	9	30
	12	-	-	-	-	-	-	-	-	-	-	-	-	-	-	-	-
14	8	2'-8"	2'-8"	8	8	29	44'-5"	1'-5 1/4"	10"	8	8	44	44'-5"	1'-11 1/4"	6 1/2"	9	33
	10	2'-0"	2'-1"	8	8	33	44'-9"	1'-3 1/2"	9"	8	8	42	44'-9"	1'-7"	7"	9	33
	12	3'-1"	2'-3"	9	8	24	44'-9"	1'-8 3/4"	12"	10	10	23	44'-9"	1'-10 1/2"	13"	9	33
		2'-5"	2'-5"	8	8	31	45'-0"	1'-4 1/2"	9 1/2"	8	8	39	45'-0"	1'-1"	7 1/2"	9	33

CLEAR SPAN	CLEAR HEIGHT	DESIGN No 1 ~ 0' TO 5' COVER TRIPLE OPENING BOXES P	REINF. STEEL (lbs)	CONC. (cu yds)	FOR MULTIPLE UNIT BOXES UNIT A3 Pa	REINF. STEEL (lbs)	CONC. (cu yds)	UNIT I 3 P I	REINF. STEEL (lbs)	CONC. (cu yds)	UNIT B3 Pb	REINF. STEEL (lbs)	CONC. (cu yds)
4	3	-	-	-	-	-	-	-	-	-	-	-	-
	4	-	-	-	-	-	-	-	-	-	-	-	-
6	2	23'-10 3/4"	947	4.95	23'-6 1/2"	939	4.81	23'-1 1/4"	936	4.74	23'-5 1/2"	942	4.88
	3	23'-10 3/4"	935	5.07	23'-6 1/2"	928	4.91	23'-1 1/4"	924	4.82	23'-5 1/2"	931	4.98
	4	23'-10 3/4"	968	5.18	23'-6 1/2"	961	5.00	23'-1 1/4"	957	4.91	23'-5 1/2"	964	5.09
	5	23'-10 3/4"	979	5.30	23'-6 1/2"	971	5.10	23'-1 1/4"	968	4.99	23'-5 1/2"	974	5.19
	8	23'-11 1/2"	987	5.44	23'-6 1/2"	989	5.19	23'-1 1/4"	986	5.08	23'-6 1/2"	993	5.32
8	4	30'-10"	1987	6.55	30'-5 1/2"	1973	6.37	30'-0 1/4"	1967	6.27	30'-4 1/4"	1981	6.46
	5	30'-9 3/4"	1934	6.68	30'-5 1/2"	1920	6.46	30'-0 1/4"	1914	6.36	30'-4 3/4"	1928	6.56
	6	30'-10 3/4"	1982	6.81	30'-5 1/2"	1966	6.56	30'-0 1/4"	1960	6.44	30'-5 1/2"	1974	6.69
	7	31'-3 3/4"	1990	7.12	30'-10 1/4"	1973	6.83	30'-5"	1967	6.71	30'-10 1/2"	1982	6.99
	8	-	-	-	-	-	-	-	-	-	-	-	-
10	4	37'-10 3/4"	3228	7.97	37'-7"	3212	7.80	37'-1 3/4"	3204	7.71	37'-5 1/2"	3218	7.87
	5	37'-10 3/4"	3202	8.09	37'-7"	3189	7.91	37'-1 3/4"	3181	7.80	37'-5 1/2"	3174	7.98
	6	37'-9 3/4"	2931	8.17	37'-4 3/4"	2913	7.93	36'-11 1/2"	2905	7.82	37'-4 1/2"	2921	8.06
	7	38'-3"	3402	8.49	37'-9 1/4"	3380	8.20	37'-4"	3372	8.07	37'-9 3/4"	3394	8.32
	8	38'-8"	3498	8.83	38'-2"	3477	8.50	37'-8 3/4"	3469	8.36	38'-2 3/4"	3490	8.69
	9	38'-8 3/4"	3952	9.01	38'-2"	3926	8.62	37'-8 3/4"	3920	8.48	37'-1 1/2"	3901	8.25
	10	39'-1 3/4"	3628	9.40	38'-6 1/2"	3602	8.97	38'-1 1/4"	3594	8.81	38'-8 1/2"	3618	9.25
	11	-	-	-	-	-	-	-	-	-	-	-	-
	12	39'-5"	3772	9.90	38'-6 1/2"	3737	9.24	38'-1 1/4"	3729	9.07	38'-11 3/4"	3764	9.73
12	6	-	-	-	-	-	-	-	-	-	-	-	-
	8	45'-7"	5573	10.19	45'-1"	5545	9.67	44'-7 3/4"	5535	9.73	45'-1 3/4"	5562	10.06
	10	46'-0 3/4"	5563	10.77	45'-5 3/4"	5532	10.34	45'-0 1/2"	5522	10.16	45'-7 3/4"	5553	10.61
	12	-	-	-	-	-	-	-	-	-	-	-	-
14	8	52'-6 1/2"	6841	11.56	52'-0 1/4"	6813	11.24	51'-7"	6803	11.10	52'-1"	6830	11.43
	10	53'-0"	6989	12.14	52'-4 3/4"	6959	11.70	51'-11 1/2"	6945	11.55	52'-6 3/4"	6979	11.98
	12	53'-3 1/4"	6209	12.64	52'-4 3/4"	6168	11.96	51'-11 1/2"	6154	11.80	52'-10"	6199	12.47
		53'-10"	6942	13.39	52'-9 1/2"	6831	12.53	52'-4"	6881	12.34	53'-4 3/4"	6932	13.20

CLEAR SPAN	CLEAR HEIGHT	DESIGN No 2 ~ 5' TO 10' COVER TRIPLE OPENING BOXES P	REINF. STEEL (lbs)	CONC. (cu yds)	FOR MULTIPLE UNIT BOXES UNIT A3 Po	REINF. STEEL (lbs)	CONC. (cu yds)	UNIT I 3 P I	REINF. STEEL (lbs)	CONC. (cu yds)	UNIT B3 Pb	REINF. STEEL (lbs)	CONC. (cu yds)
4	3	-	-	-	-	-	-	-	-	-	-	-	-
	4	-	-	-	-	-	-	-	-	-	-	-	-
6	2	23'-10 1/4"	1007	4.95	23'-6 1/2"	1000	4.81	23'-1 1/2"	996	4.74	23'-5 1/2"	1003	4.88
	3	23'-10 1/4"	1016	5.07	23'-6 1/2"	1009	4.91	23'-1 1/2"	1006	4.82	23'-5 1/2"	1012	4.98
	4	23'-10 3/4"	1025	5.18	23'-6 1/2"	1017	5.00	23'-1 1/2"	1014	4.91	23'-5 1/2"	1020	5.09
	5	23'-10 3/4"	1035	5.30	23'-6 1/2"	1028	5.10	23'-1 1/4"	1025	4.99	23'-5 1/2"	1031	5.19
	8	23'-11 1/2"	1045	5.44	23'-6 1/2"	1038	5.19	23'-1 1/4"	1034	5.08	23'-6 1/4"	1042	5.32
8	4	30'-10"	2075	6.55	30'-5 1/2"	2061	6.37	30'-0 1/4"	2055	6.27	30'-4 3/4"	2069	6.46
	5	30'-9 3/4"	2087	6.66	30'-5 1/2"	2073	6.48	30'-0 1/4"	2067	6.36	30'-4 3/4"	2081	6.56
	6	30'-10 3/4"	2239	6.81	30'-5 1/2"	2222	6.56	30'-0 1/4"	2216	6.44	30'-5 1/2"	2230	6.69
	7	31'-3 3/4"	2140	7.12	30'-10 1/4"	2124	6.83	30'-5"	2118	6.71	30'-10 1/2"	2132	6.99
	8	-	-	-	-	-	-	-	-	-	-	-	-
10	4	37'-9"	3180	7.92	37'-4 3/4"	3173	7.74	36'-11 1/2"	3163	7.64	37'-3 1/4"	3181	7.82
	5	37'-7"	3183	8.09	37'-7"	3170	7.91	37'-1 1/4"	3182	7.80	37'-5 1/2"	3175	7.98
	6	37'-11 1/2"	3304	8.23	37'-7"	3288	8.01	37'-1 3/4"	5280	7.89	37'-6 1/4"	3296	8.12
	7	38'-3"	3430	8.49	37'-9 1/4"	3409	8.20	37'-4"	3401	8.07	37'-9 3/4"	3422	8.32
	8	38'-8"	3535	8.83	38'-2"	3514	8.50	37'-8 3/4"	3506	8.36	38'-2 1/4"	3527	8.69
	9	38'-8 3/4"	3513	9.01	38'-2"	3589	8.62	37'-8 3/4"	3581	8.48	37'-1 1/2"	3565	8.25
	10	39'-1 3/4"	3668	9.40	38'-6 1/2"	3641	8.97	38'-1 1/4"	3633	8.81	38'-8 1/2"	3657	9.25
	11	-	-	-	-	-	-	-	-	-	-	-	-
	12	39'-5"	3587	9.90	38'-6 1/2"	3552	9.24	38'-1 1/4"	3544	9.07	38'-11 3/4"	3579	9.73
12	6	-	-	-	-	-	-	-	-	-	-	-	-
	8	45'-7"	6214	10.19	45'-1"	6228	9.87	44'-7 3/4"	6217	9.73	45'-1 3/4"	6245	10.06
	10	46'-0 3/4"	5358	10.77	45'-5 3/4"	5328	10.34	45'-0 1/2"	5318	10.18	45'-7 3/4"	5348	10.51
	12	-	-	-	-	-	-	-	-	-	-	-	-
14	8	52'-8"	6701	11.63	52'-2 1/2"	6673	11.33	51'-9 1/2"	6663	11.20	52'-2 3/4"	6690	11.50
	10	-	-	-	-	-	-	-	-	-	-	-	-
	12	53'-5"	6759	12.73	52'-7 1/4"	6719	12.10	52'-1 3/4"	6708	11.93	52'-11 3/4"	6749	12.56
		-	-	-	-	-	-	-	-	-	-	-	-

"A" = DIMENSION FROM ℄ AT FIRST "aa", "bb" REBAR TO THE OUTSIDE FACE AT THE PARAPET WALL ALONG THE LENGTH AT THE BOX
"Q" = DIMENSION FROM ℄ AT FIRST "mm", "nn" REBAR TO THE OUTSIDE FACE AT THE PARAPET WALL ALONG THE LENGTH AT THE BOX

F.H.W.A. REGION NO.	STATE		SHEET NO	TOTAL SHEETS
6	NEW MEXICO			

NUMBER OF BARS REQUIRED FOR ENTIRE CULVERT

o1, o3, b1, b3, m1, & n1: 12 (L-R) ÷ SPACING
o2, b2; m2, & n2: 24 (L-R) ÷ SPACING
oo, bb, mm, nn: one of eo @ eo skew end
MARK oo1 to oox & bb1 to bbx, etc
c1 BARS: 1(24L ÷ SPACING)
PLUS 2 @ EACH SKEW END
c2, d, & e BARS: (24L ÷ SPACING)
c3, c4 BARS: (48L ÷ SPACING)
PLUS 4 @ EACH SKEWED END
p1 & p2 BARS: 12 OF EACH @ EACH SKEW END
i & k BARS: 4 OF EACH @ EACH SKEW END.
g & h BARS: SEE TABLE ON THIS SHEET
T BARS: SEE SERIAL CB-33
L = LENGTH OF BARREL ALONG AXIS OF BOX IN FEET
R = 0.5774 (1 1/2S +TS) FOR ONE SKEW END
R = 1.1547 (1 1/2 S + TS) FOR TWO SKEWED ENDS

REBAR DETAILS

oo1,bb1 mm1,nn1 TO oox,bbx mmx,nnx	B DECREASE IN INCREMENTS OF "C" INCHES TO B-(x-1)C	
p1 & p2	P MINUS 3"	FOR TRIPLE
p1	PA MINUS 3"	FOR UNIT A3
p2	PA MINUS 7"	
p1 & p2	PI MINUS 3"	FOR UNIT I 3
p1	PB MINUS 3"	FOR UNIT B3
p2	PB PLUS 1"	
T-bars	L+(1'-0" EACH SKEW END)	FOR SIZE & SPACING SEE SERIAL CB-33

GENERAL NOTES

1 FOR DETAILS OF BARS NOT SHOWN ON THIS SHEET SEE SERIAL CB-33. CUT REINFORCING BARS TO THE NEAREST 1" IN LENGTH. USE THE SHORTER LENGTH WHEN THE DETAILED LENGTH FALLS ON 1/2"

2. CALCULATE QUANTITIES FROM NOTES 4 & 5 ON SERIAL CB-33 TAKING QUANTITIES PER LIN. FOOT FROM CB-33 AND QUANTITIES FOR THE SKEW ENDS FROM THIS SHEET

3. PLAN VIEWS ON THIS SHEET SHOW THE ENDS FOR LEFT FORWARD SKEW FOR THE PROPER DIRECTION OF SKEW, SEE ROAD PLANS

4. ONE SKEW END INCLUDES PARAPET, CUT-OFF AND BARREL BEYOND LENGTH L. ALL QUANTITIES LISTED IN TABLE ARE FOR ONE SKEW END. REINFORCING STEEL QUANTITIES ALSO CONTAIN MODIFICATION ACCOUNTING FOR, oo, bb, mm, & nn BARS NEAR END OF BARREL

5 p BARS WHICH ARE DETAILED OVER 40' LONG MAY BE SPLICED AT OR NEAR THE CENTER OF THE OVERALL LENGTH BY LAPPING AT LEAST 20 BAR DIA. PAY WEIGHT FOR REINFORCING STEEL DOES NOT INCLUDE THESE SPLICES COST OF SPLICE MATERIAL TO BE INCLUDED IN UNIT PRICE BID FOR REINFORCING STEEL

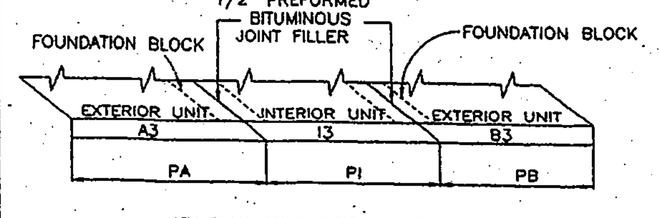

KEY PLAN FOR MULTIPLE UNIT BOXES

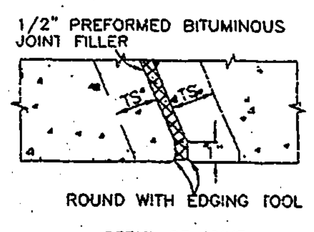

DETAIL OF JOINT BETWEEN UNITS

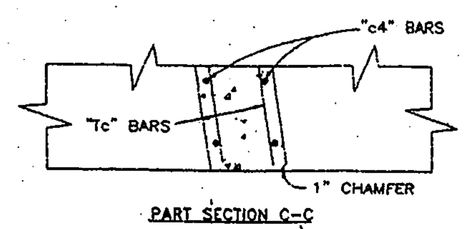

PART SECTION C-C

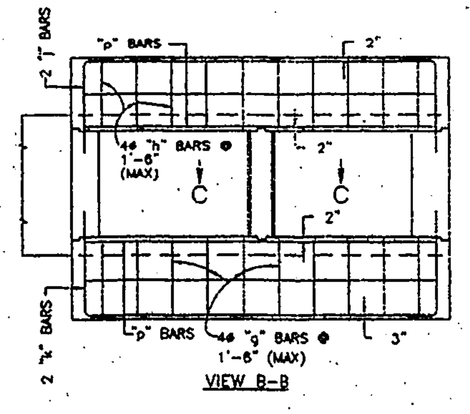

VIEW B-B

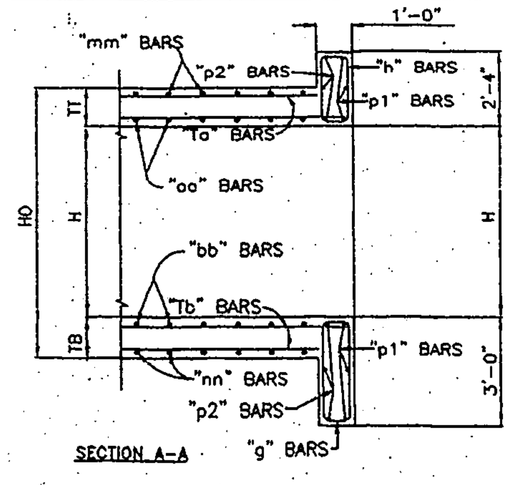

SECTION A-A

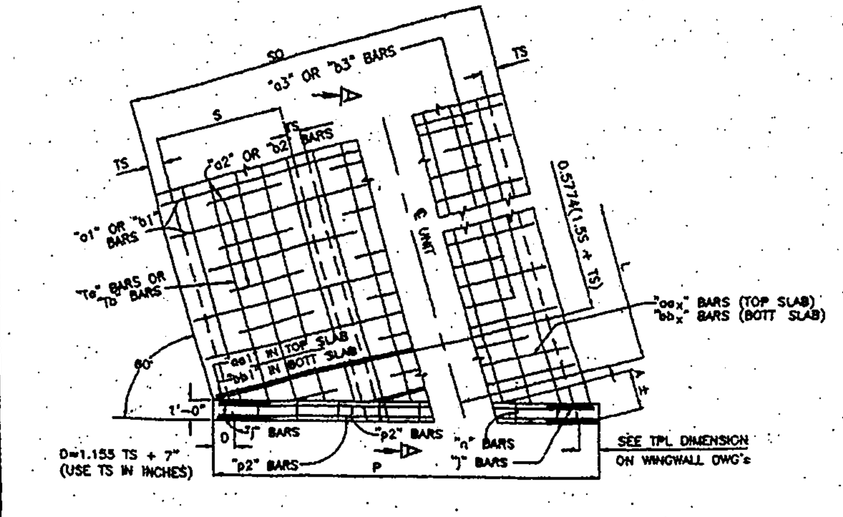

PART PLAN
SHOWING POSITION OF "oo" & "bb" BARS AND REINFORCING IN PARAPET

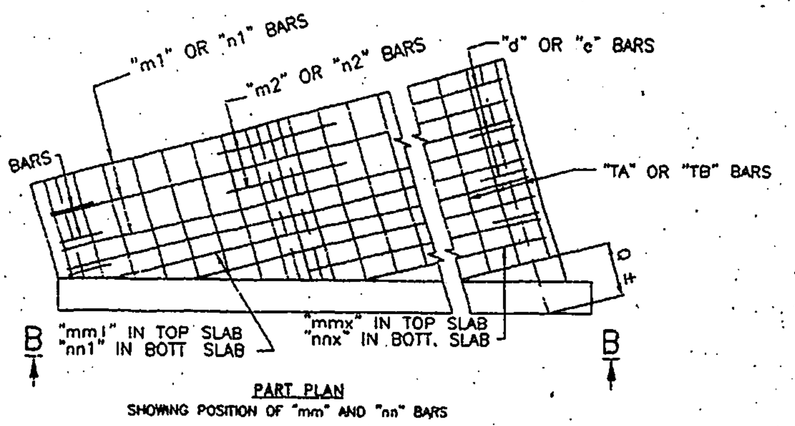

PART PLAN
SHOWING POSITION OF "mm" AND "nn" BARS

REVISIONS (OR CHANGE NOTICES)			
7			
6			
5			
4			
3			
2			
1	REVISED DRAWING BHI	10/6/97	CC
NO	DESCRIPTION	DATE	BY

DESIGNED BY: DES_BY
DETAILED BY: DET_BY
CHECKED BY: CHK_BY
APPROVAL RECOMMENDATION: BRIDGE DESIGN ENGINEER 2-8-78 DATE
APPROVED: DESIGN BUREAU CHIEF 3/2/82 DATE

NEW MEXICO STATE HIGHWAY & TRANSPORTATION DEPARTMENT

CONCRETE BOX CULVERT BARRELS

TRIPLE OPENING ~ 30° SKEW
DESIGN No. 1 & 2

SERIAL CB-33-30 SHEET 1 OF 2

GOODWIN & ASSOCIATES, P.A.
CONSULTING ENGINEERS
BOX 90606
ALBUQUERQUE, NEW MEXICO 87199
(505) 828-2200, FAX (505) 797-9539

ALBUQUERQUE
PUBLIC WORKS DEPARTMENT

TITLE: AMOLE CHANNEL (PHASE I)
NEW MEXICO STATE HIGHWAY & TRANSPORTATION DEPT. DETAILS

DESIGN REVIEW COMMITTEE: APPROVED JUN 29 2005 DESIGN REVIEW COMMITTEE
CITY ENGINEER APPROVAL: APPROVED JUL 22 2005 CITY ENGINEER
LAST DESIGN UPDATE | MO./DAY/YR. | MO./DAY/YR.

CITY PROJECT NO. 6794.82 | ZONE MAP NO. N-9 | SHEET 16 OF 20

AS BUILT INFORMATION
CONTRACTOR | DATE
WORK STAKED BY | DATE
STAKING CHECKED BY | DATE
ACCEPTANCE BY | DATE
FIELD VERIFICATION BY | DATE
DRAWINGS CORRECTED BY | DATE
MICRO-FILM INFORMATION
RECORDED BY | DATE
NO.

BENCH MARKS
NO. | DATE | REMARKS

SURVEY INFORMATION
FIELD NOTES
NO. | BY | DATE

ENGINEER'S SEAL

REVISIONS
DESIGNED BY JDH DATE 05/04
DRAWN BY DER DATE 05/04
CHECKED BY DMG DATE 05/04

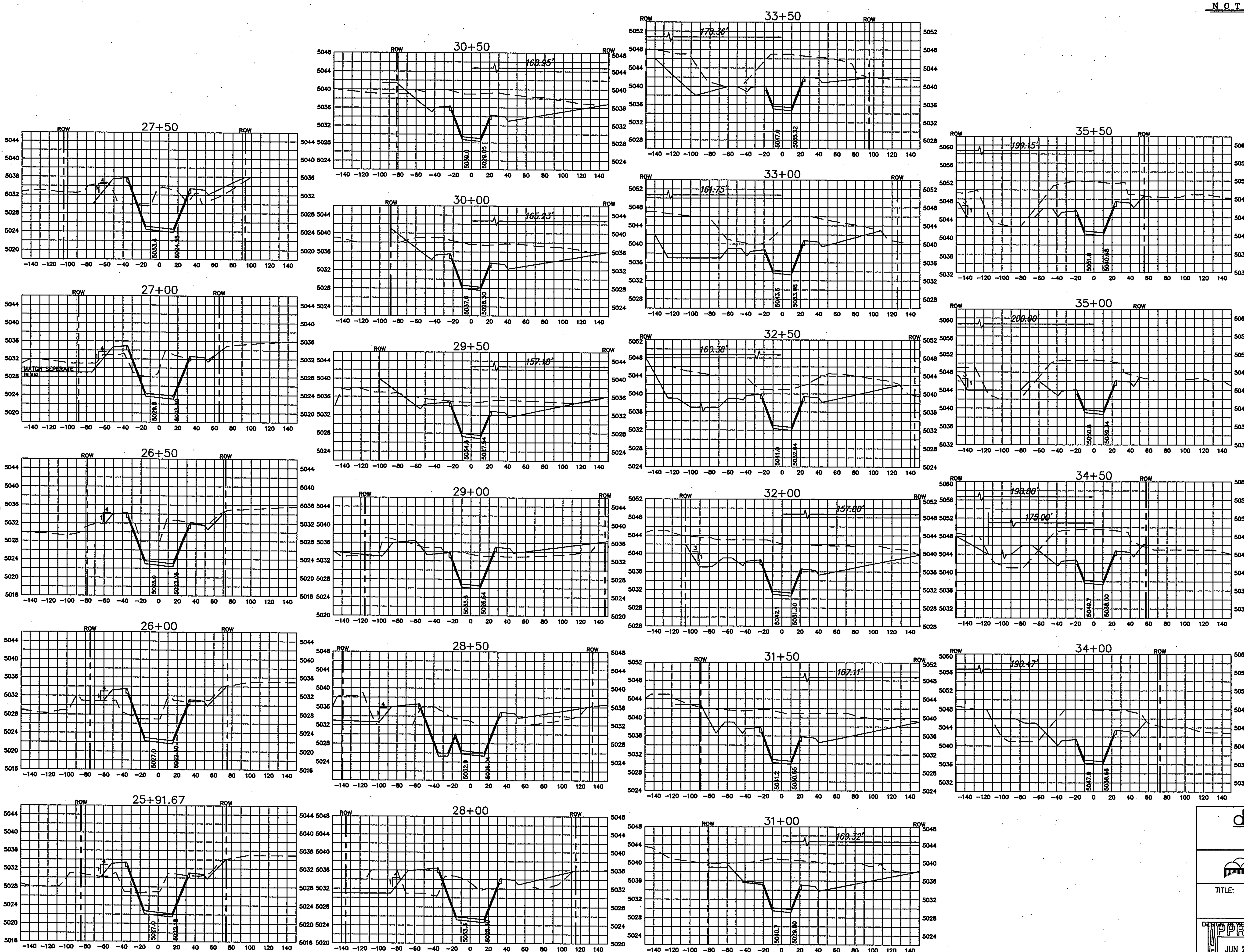

SCALE: HORIZ. 1" = 50'
VERT. 1" = 10'

NOTES

AS BUILT INFORMATION	
CONTRACTOR	
WORK STAKED BY	DATE
INSPECTOR'S ACCEPTANCE BY	DATE
FIELD VERIFICATION BY	DATE
DRAWINGS CORRECTED BY	DATE
MICRO-FILM INFORMATION	
RECORDED BY	DATE
NO.	

BENCH MARKS

STATION "TRANS" IS LOCATED 6 MI. SOUTHWEST OF DOWNTOWN ALBUQUERQUE, IN THE R.O.W. OF A PLAINS ELECTRIC CO-OP TRANSMISSION LINE. TO REACH STATION FROM INTERSECTION OF CENTRAL AVE. & 98TH ST. SW, GO SOUTH ON 98TH ST. 1.2 MI. TO JUNCTION WITH GIBSON BLVD. & SNOW VISTA BLVD., THEN SOUTHEAST ALONG SNOW VISTA AND CO-OP ELECTRIC TRANSMISSION LINE 0.85 MI. TO PYLON NUMBERED "52". STATION IS JUST EAST OF THIS POINT.
X = 354,899.45, Y = 1,471,822.67, ELEV. = 5118.37
(NAD 1927/SLD 1929)

SURVEY INFORMATION

FIELD NOTES		
NO.	BY	DATE

ENGINEER'S SEAL

JAMES D. HUGHES — NEW MEXICO — 11674 — REGISTERED PROFESSIONAL ENGINEER
3-7-05

NO.	DATE	REMARKS	BY

REVISIONS

DESIGN

DESIGNED BY	JDH	DATE	12/04
DRAWN BY	NHE	DATE	12/04
CHECKED BY	DMG	DATE	12/04

dmg MARK GOODWIN & ASSOCIATES, P.A.
CONSULTING ENGINEERS
P.O. BOX 90606
ALBUQUERQUE, NEW MEXICO 87199
(505) 828-2200, FAX (505) 797-9539

ALBUQUERQUE METROPOLITAN
ARROYO FLOOD CONTROL AUTHORITY

TITLE: AMOLE CHANNEL
(PHASE I)
CROSS SECTIONS

DESIGN REVIEW COMMITTEE — APPROVED — JUN 29 2005 — DESIGN REVIEW COMMITTEE

CITY ENGINEER APPROVAL — APPROVED — JUL 22 2005 — CITY ENGINEER

LAST DESIGN UPDATE — MO./DAY/YR. — MO./DAY/YR.

CITY PROJECT NO.	ZONE MAP NO.	SHEET	OF
679482	N-9	17	20

A4009SNH/AMOLE CHANNEL PLANS/AMOLE CHANNEL PLANS/PHASE1/PH1-XSEC-BASE1 (LAYOUT1) 1-28-05 NHE

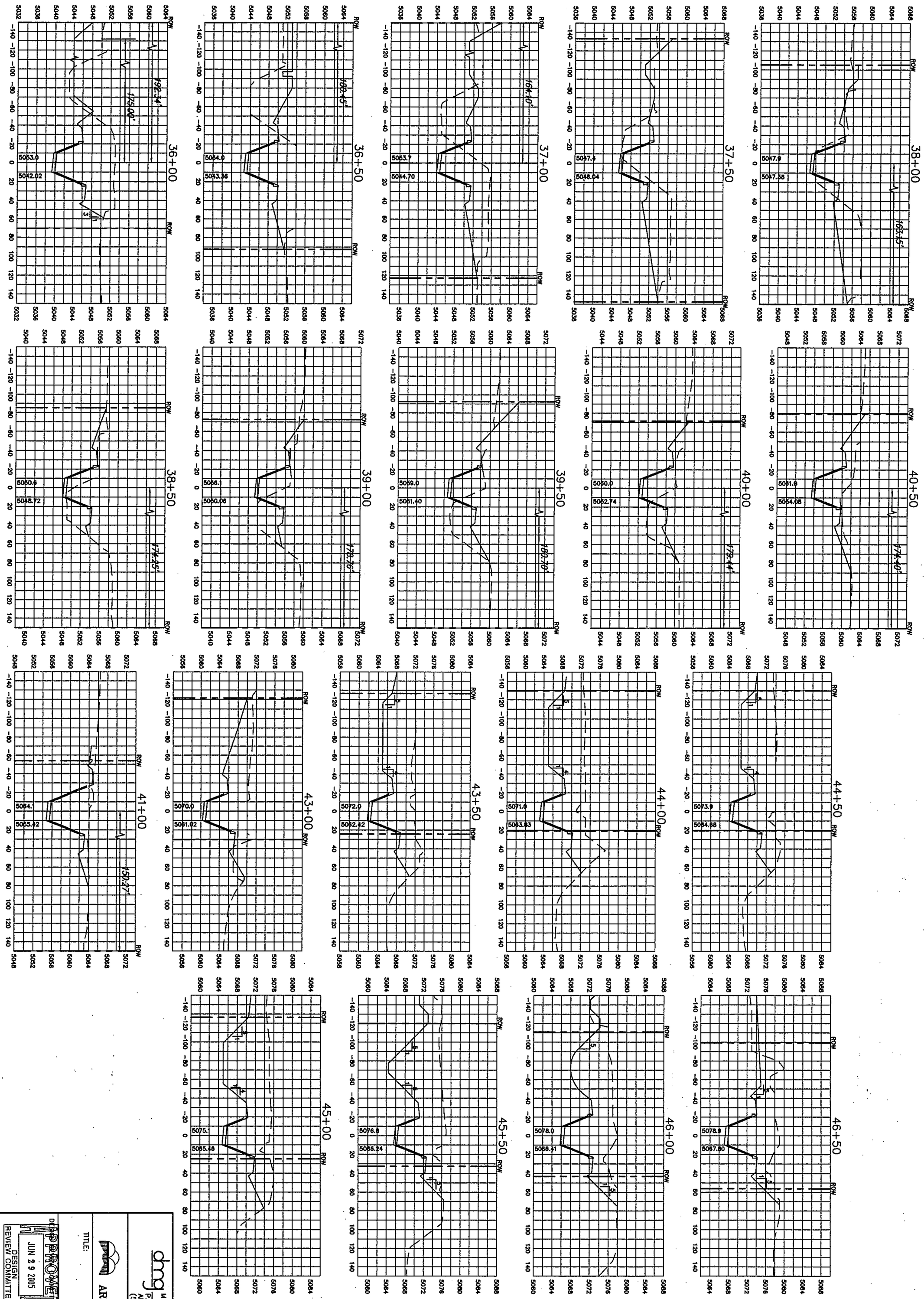

A4009SNH/AMOLE CHANNEL PLANS/AMOLE CHANNEL PLANS/PHASE1/PH1-XSEC-BASE1 (LAYOUT2) 02-22-05 NHE JCC

SCALE: HORIZ. 1" = 50'
VERT. 1" = 10'

NOTES

MARK GOODWIN & ASSOCIATES, P.A.
CONSULTING ENGINEERS
P.O. BOX 90606
ALBUQUERQUE, NEW MEXICO 87199
(505) 828-2200, FAX (505) 797-9539

ALBUQUERQUE METROPOLITAN
ARROYO FLOOD CONTROL AUTHORITY

TITLE:
AMOLE CHANNEL
(PHASE I)
CROSS SECTIONS

DESIGN REVIEW COMMITTEE — APPROVED — JUN 29 2005
CITY ENGINEER — APPROVED — JUL 22 2005

NO.	DATE	REMARKS	BY

REVISIONS

DESIGN

DESIGNED BY	JDH	DATE	12/04
DRAWN BY	NHE	DATE	12/04
CHECKED BY	DMG	DATE	12/04

ENGINEER'S SEAL: JAMES D. HUGHES, 11074, NEW MEXICO, REGISTERED PROFESSIONAL ENGINEER, 3-7-05

SURVEY INFORMATION

FIELD NOTES

NO.	BY	DATE

BENCH MARKS

STATION "TRANS" IS LOCATED 6 MI. SOUTHWEST OF DOWNTOWN ALBUQUERQUE, IN THE R.O.W. OF A PLAINS ELECTRIC CO-OP TRANSMISSION LINE. TO REACH STATION FROM INTERSECTION OF CENTRAL AVE. & 98TH ST. SW, GO SOUTH ON 98TH ST. 1.2 MI. TO JUNCTION WITH GIBSON BLVD. & SNOW VISTA BLVD., THEN SOUTHEAST ALONG SNOW VISTA AND CO-OP ELECTRIC TRANSMISSION LINE 0.85 MI. TO PYLON NUMBERED "52". STATION IS JUST EAST OF THIS POINT.
X = 354,899.45, Y = 1,471,822.67, ELEV. = 5118.37
(NAD 1927/SLD 1929)

AS BUILT INFORMATION

CONTRACTOR		
WORK STAKED BY	DATE	
INSPECTOR'S ACCEPTANCE BY	DATE	
FIELD VERIFICATION BY	DATE	
DRAWINGS CORRECTED BY	DATE	

MICRO-FILM INFORMATION

RECORDED BY	DATE
NO.	

CITY PROJECT NO.	ZONE MAP NO.	SHEET	OF
679482	N-9	18	20

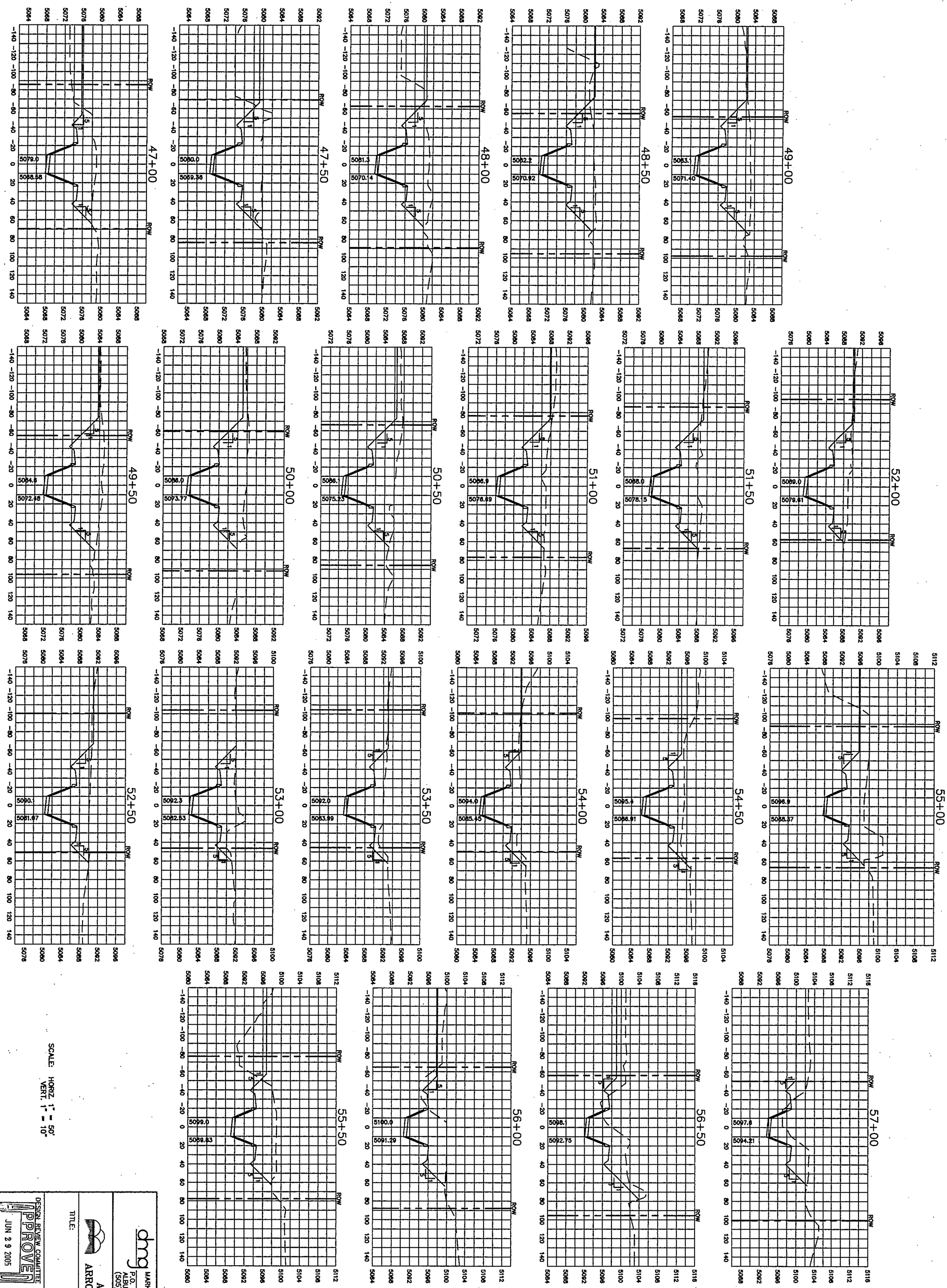

SCALE: HORIZ. 1" = 50'
VERT. 1" = 10'

A4009SNH/AMOLE CHANNEL PLANS/AMOLE CHANNEL PLANS/PHASE1/PH1-XSEC-BASE1 (LAYOUT3) 02-22-05 NHE JCC

NOTES

ENGINEER'S SEAL	SURVEY INFORMATION	BENCH MARKS	AS BUILT INFORMATION
JAMES D. HUGHES 11074 NEW MEXICO REGISTERED PROFESSIONAL ENGINEER 3-7-05	FIELD NOTES — NO. / BY / DATE	STATION "TRANS" IS LOCATED 6 MI. SOUTHWEST OF DOWNTOWN ALBUQUERQUE, IN THE R.O.W. OF A PLAINS ELECTRIC CO-OP TRANSMISSION LINE. TO REACH STATION FROM INTERSECTION OF CENTRAL AVE. & 98TH ST. SW, GO SOUTH ON 98TH ST. 1.2 MI. TO JUNCTION WITH GIBSON BLVD. & SNOW VISTA BLVD., THEN SOUTHEAST ALONG SNOW VISTA AND CO-OP ELECTRIC TRANSMISSION LINE 0.85 MI. TO PYLON NUMBERED "52". STATION IS JUST EAST OF THIS POINT. X = 354,899.45, Y = 1,471,822.67, ELEV. = 5118.37 (NAD 1927/SLD 1929)	CONTRACTOR WORK STAKED BY — DATE INSPECTOR'S ACCEPTANCE BY — DATE FIELD VERIFICATION BY — DATE DRAWINGS CORRECTED BY — DATE MICRO-FILM INFORMATION RECORDED BY — DATE NO.

NO.	DATE	REMARKS	BY

REVISIONS

DESIGN

DESIGNED BY	JDH	DATE	12/04
DRAWN BY	NHE	DATE	12/04
CHECKED BY	DMG	DATE	12/04

dmg MARK GOODWIN & ASSOCIATES, P.A.
CONSULTING ENGINEERS
P.O. BOX 90606
ALBUQUERQUE, NEW MEXICO 87199
(505) 828-2200, FAX (505) 797-9539

ALBUQUERQUE METROPOLITAN
ARROYO FLOOD CONTROL AUTHORITY

TITLE:

AMOLE CHANNEL (PHASE I) CROSS SECTIONS

DESIGN REVIEW COMMITTEE — APPROVED JUN 29 2005 — DESIGN REVIEW COMMITTEE

CITY ENGINEER APPROVAL — APPROVED JUL 22 2005 — CITY ENGINEER

LAST DESIGN UPDATE — MO./DAY/YR. — MO./DAY/YR.

CITY PROJECT NO. 678492 | ZONE MAP NO. N-9 | SHEET 19 OF 20

F:\A04JOBS\A4009SNH\amole channel plans\Phase1\ph1-xsec-base1.dwg, 3/3/2005 5:31:37 PM, JCC,JCC

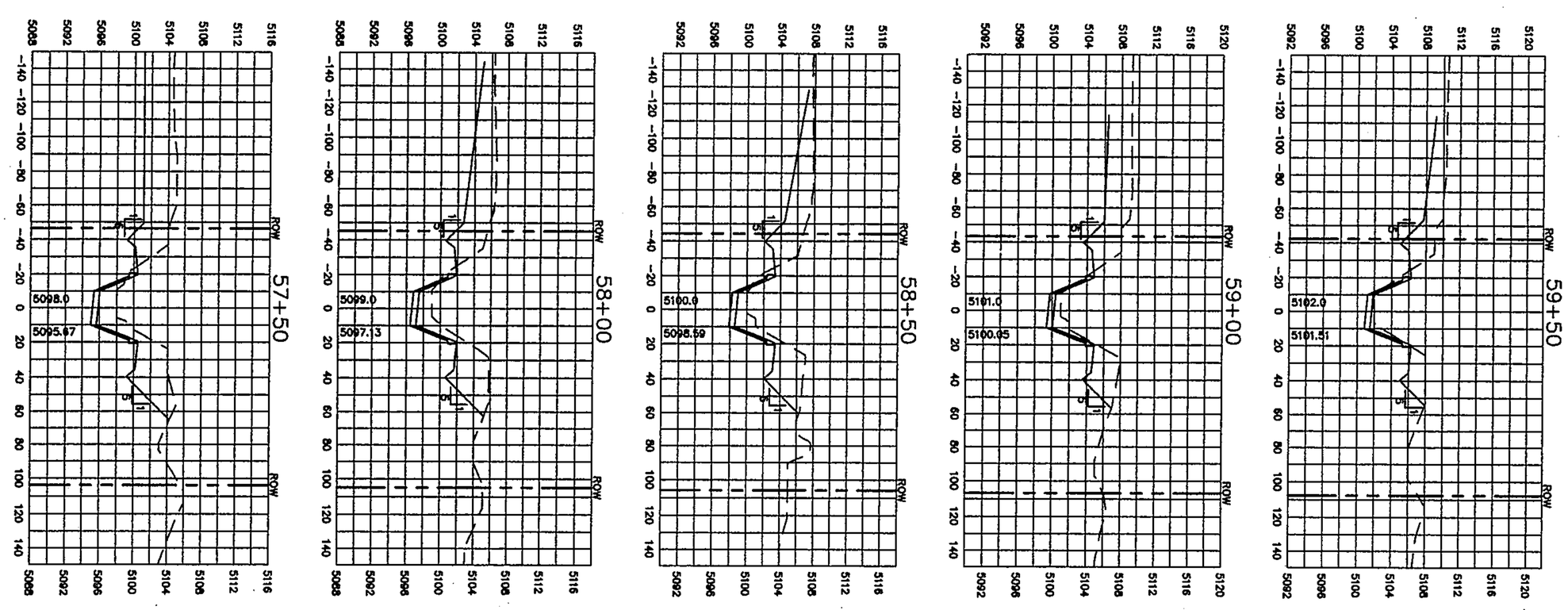

SCALE: HORIZ. 1" = 50'
VERT. 1" = 10'

NOTES

A4009SNH/AMOLE CHANNEL PLANS/AMOLE CHANNEL PLANS/PHASE1/PH1-XSEC-BASE1 (LAYOUT4) 02-22-05 NHE JCC

CITY PROJECT NO. 678492

ZONE MAP NO. N-9

SHEET 20 OF 20

DRB APPROVAL
DESIGN REVIEW COMMITTEE
JUN 29 2005

CITY ENGINEER APPROVAL
CITY ENGINEER
JUL 22 2005

LAST DESIGN UPDATE

MO./DAY/YR.

TITLE:
AMOLE CHANNEL
(PHASE 1)
CROSS SECTIONS

ALBUQUERQUE METROPOLITAN
ARROYO FLOOD CONTROL AUTHORITY

dmg
MARK GOODWIN & ASSOCIATES, P.A.
CONSULTING ENGINEERS
P.O. BOX 90606
ALBUQUERQUE, NEW MEXICO 87199
(505) 828-2200, FAX (505) 797-9539

NO.	DATE	REMARKS	BY

REVISIONS

DESIGN

DESIGNED BY	JDH	DATE	12/04
DRAWN BY	NHE	DATE	12/04
CHECKED BY	DMG	DATE	12/04

ENGINEER'S SEAL
JAMES D. HUGHES
11674
NEW MEXICO
REGISTERED PROFESSIONAL ENGINEER
3-7-05

SURVEY INFORMATION
FIELD NOTES

NO.	BY	DATE

BENCH MARKS
STATION "TRANS" IS LOCATED 6 MI. SOUTHWEST OF DOWNTOWN ALBUQUERQUE, IN THE R.O.W. OF A PLAINS ELECTRIC CO-OP TRANSMISSION LINE. TO REACH STATION FROM INTERSECTION OF CENTRAL AVE. & 98TH ST. SW, GO SOUTH ON 98TH ST. 1.2 MI. TO JUNCTION WITH GIBSON BLVD. & SNOW VISTA BLVD., THEN SOUTHEAST ALONG SNOW VISTA AND CO-OP ELECTRIC TRANSMISSION LINE 0.85 MI. TO PYLON NUMBERED "52". STATION IS JUST EAST OF THIS POINT.
X = 354,899.45, Y = 1,471,822.67, ELEV. = 5118.37
(NAD 1927/SLD 1929)

AS BUILT INFORMATION

CONTRACTOR		
WORK STAKED BY	DATE	
INSPECTOR'S ACCEPTANCE BY	DATE	
FIELD VERIFICATION BY	DATE	
DRAWINGS CORRECTED BY	DATE	

MICRO-FILM INFORMATION

RECORDED BY	DATE
NO.	

ALBUQUERQUE METROPOLITAN ARROYO FLOOD CONTROL AUTHORITY

CONSTRUCTION PLANS FOR

AMOLE CHANNEL PHASE II

FROM AMOLE DAM TO AMOLE BEND

ALBUQUERQUE, NEW MEXICO

INDEX TO DRAWINGS

SHEET NO.	SHEET
1	INDEX OF SHEETS
2	MASTER PLAN
3–4	TYPICAL SECTIONS & TEMP TRANSITION DETAIL
5–6	CHANNEL PLAN & PROFILE (PHASE II)
7	STRUCTURAL DETAILS (PHASE II)
8–10	CHANNEL SECTIONS

REFERENCES:

- CLOMR REQUEST FOR AMOLE CHANNEL PHASES I, II & III FROM CONFLUENCE OF SNOW VISTA DOWN TO AMOLE DETENTION BASIN DEC. 2004 BY MARK GOODWIN & ASSOC.
- TRACTS 29, 30 & 31 AT ARROWOOD DMP OCT. 11, 2004 BY WILSON & CO.
- GIBSON BLVD. DRAINAGE PLAN NOV. 21, 2003 BY BOHANNAN–HOUSTON INC.
- CLOMR REQUEST FOR AMOLE ARROYO NOV. 2003 BY NOV. 2003 BY ISAACSON & ARFMAN
- AMOLE–HUBBEL DMP JULY 22, 1999 BY LEEDSHILL–HERKENHOFF, INC.

NOTES

1. AMAFCA FIELD ENGINEER SHALL BE NOTIFIED 48–HOURS PRIOR TO ANY WORK WITHIN THE AMAFCA R/W. TEL 884–2215 JERRY LOVATO.
2. NO WORK WILL BE PERFORMED IN THE AMAFCA R/W BETWEEN MAY 15 AND OCTOBER 15 WITHOUT WRITTEN PERMISSION FROM AMAFCA.
3. ALL SUBGRADE, BACKFILL AND EMBANKMENT SHALL BE COMPACTED TO 95% (MODIFIED PROCTOR) WITHIN AMAFCA R/W. TESTING REPORTS SHALL BE PROVIDED TO AMAFCA FIELD ENGINEER.
4. AMAFCA FIELD ENGINEER WILL BE NOTIFIED 48–HOURS PRIOR TO FINAL INSPECTION OF ANY FACILITIES WITHIN THE AMAFCA R/W.
5. ALL DISTURBED GROUND AREAS SHALL BE REVEGETATED IN ACCORDANCE WITH CITY OF ALBUQUERQUE STANDARD SPECIFICATIONS FOR PUBLIC WORKS CONSTRUCTION, SECTION 1012 NATIVE GRASS SEEDING, AS CURRENTLY UPDATED.

APPROVED FOR CONSTRUCTION WITHIN AMAFCA RIGHT–OF–WAY

FOR AMAFCA — DATE 2/23/05

APPROVED FOR CONSTRUCTION

JOHN P. KELLY, P.E.
EXECUTIVE ENGINEER, AMAFCA

2-23-05
DATE

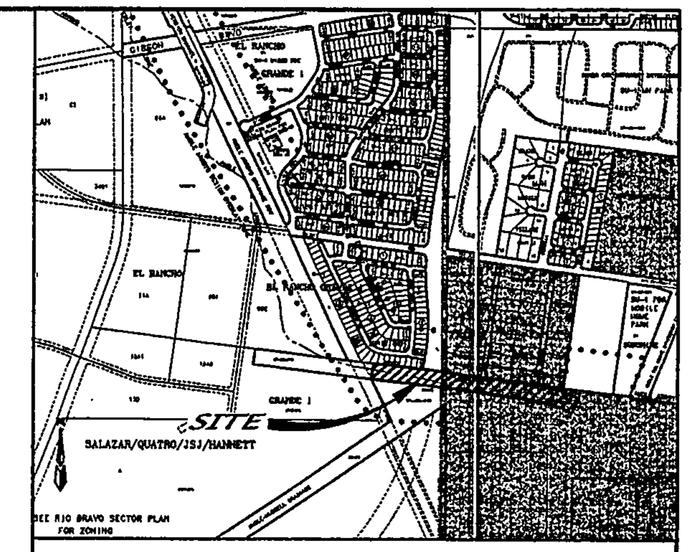

VICINITY MAP — ZONE ATLAS N–9–Z
SCALE: NONE

GENERAL NOTES

NOTICE TO CONTRACTORS

1. AN EXCAVATION/CONSTRUCTION PERMIT WILL BE REQUIRED BEFORE BEGINNING ANY WORK WITHIN THE CITY RIGHT–OF–WAY.
2. ALL WORK DETAILED ON THESE PLANS TO BE PERFORMED UNDER CONTRACT SHALL, EXCEPT AS OTHERWISE STATED OR PROVIDED FOR HEREON, BE CONSTRUCTED IN ACCORDANCE WITH THE THE NEW MEXICO STATE HIGHWAY AND TRANSPORTATION DEPARTMENT STANDARD SPECIFICATIONS FOR HIGHWAY AND BRIDGE CONSTRUCTION 1994 EDITION AND ALL WORK WITHIN CITY OF ALBUQUERQUE PUBLIC RIGHT OF WAY, EASEMENT AND PROPERTY SHALL BE PERFORMED IN ACCORDANCE WITH CITY OF ALBUQUERQUE STANDARDS AND SPECIFICATIONS FOR PUBLIC WORKS CONSTRUCTION, 1986 – UPDATE #7.
3. TWO WORKING DAYS PRIOR TO ANY EXCAVATION, THE CONTRACTOR MUST CONTACT NEW MEXICO ONE CALL SYSTEM (280–1990) FOR LOCATION OF EXISTING UTILITIES.
4. PRIOR TO CONSTRUCTION, THE CONTRACTOR SHALL EXCAVATE AND VERIFY THE HORIZONTAL AND VERTICAL LOCATIONS OF ALL OBSTRUCTIONS. SHOULD A CONFLICT EXIST, THE CONTRACTOR SHALL NOTIFY THE ENGINEER IMMEDIATELY SO THAT THE CONFLICT CAN BE RESOLVED WITH A MINIMUM AMOUNT OF DELAY.
5. FIVE (5) WORKING DAYS PRIOR TO BEGINNING OF CONSTRUCTION, THE CONTRACTOR SHALL SUBMIT TO CONSTRUCTION COORDINATION DIVISION A DETAILED CONSTRUCTION SCHEDULE. TWO (2) WORKING DAYS PRIOR TO THE START OF CONSTRUCTION, THE CONTRACTOR SHALL OBTAIN A BARRICADING PERMIT FROM THE CONSTRUCTION COORDINATION DIVISION. CONTRACTOR SHALL NOTIFY THE CONSTRUCTION COORDINATION ENGINEER (924–3400) PRIOR TO OCCUPYING AN INTERSECTION. REFER TO SECTION 19 OF THE GENERAL CONDITIONS OF THE STANDARD SPECIFICATIONS.
6. ALL WORK AFFECTING ARTERIAL ROADWAYS REQUIRES TWENTY–FOUR HOUR CONSTRUCTION.
7. ALL STREET STRIPING ALTERED OR DESTROYED SHALL BE REPLACED WITH PLASTIC REFLECTORIZED PAVEMENT MARKING BY CONTRACTOR TO THE SAME LOCATION AS WAS EXISTING, OR AS INDICATED BY THIS PLAN SET.
8. CONTRACTOR SHALL NOTIFY THE ENGINEER NOT LESS THAN SEVEN (7) DAYS PRIOR TO STARTING WORK IN ORDER THAT THE CITY SURVEYOR MAY TAKE NECESSARY MEASURES TO INSURE THE PRESERVATION OF SURVEY MONUMENTS. CONTRACTOR SHALL NOT DISTURB PERMANENT SURVEY MONUMENTS WITHOUT THE CONSENT OF THE CITY SURVEYOR AND SHALL NOTIFY THE CITY SURVEYOR AND BEAR THE EXPENSE OF REPLACING ANY THAT MAY BE DISTURBED WITHOUT PERMISSION. REPLACEMENT SHALL BE DONE ONLY BY THE CITY–SURVEYOR. WHEN A CHANGE IS MADE IN THE FINISHED ELEVATIONS OF THE PAVEMENT OF ANY ROADWAY IN WHICH A PERMANENT SURVEY MONUMENT IS LOCATED, CONTRACTOR SHALL, AT HIS OWN EXPENSE, ADJUST THE MONUMENT TO COVER THE NEW GRADE UNLESS OTHERWISE SPECIFIED. REFER TO SECTION 4.4 OF THE GENERAL CONDITIONS OF THE STANDARD SPECIFICATIONS.

   CONTRACTOR SHALL RECORD DATA ON ALL UTILITY LINES AND ACCESSORIES AS REQUIRED BY THE CITY OF ALBUQUERQUE FOR THE PREPARATION OF "AS CONSTRUCTED" DRAWINGS. CONTRACTOR SHALL NOT COVER UTILITY LINES AND ACCESSORIES UNTIL ALL DATA HAVE BEEN RECORDED.
10. CONTRACTOR SHALL MAINTAIN A GRAFFITI–FREE WORK SITE. CONTRACTOR SHALL PROMPTLY REMOVE ANY GRAFFITI FROM ALL EQUIPMENT, WHETHER PERMANENT OR TEMPORARY.
11. CONTRACTOR SHALL COORDINATE WITH THE CITY OF ALBUQUERQUE WATER SYSTEMS DIVISION (857–8200) SEVEN (7) WORKING DAYS IN ADVANCE OF ANY WORK THAT MAY AFFECT EXISTING PUBLIC WATER OR SEWER UTILITIES. EXISTING VALVES TO BE OPERATED BY CITY PERSONNEL ONLY. CONTRACTOR SHALL CONTACT THE WATER SYSTEMS DIVISION SEVEN (7) WORKING DAYS PRIOR TO NEEDING VALVES TURNED ON OR OFF.
12. FOR STORM DRAIN CONSTRUCTION, RCP JOINTS SHALL NOT BE GROUTED PRIOR TO FINAL INSPECTION. FINAL INSPECTION WILL DETERMINE JOINTS TO BE GROUTED FOR FINAL ACCEPTANCE OF THE CONSTRUCTION.

RECORD DRAWINGS WERE PREPARED FROM INFORMATION PROVIDED BY THE CONTRACTOR
RECORD DRAWING
OCT 18 2005

THE FOLLOWING NOTES ALSO APPLY WHEN CHECKED

☑ ALL STORM DRAINAGE FACILITIES SHALL BE COMPLETED PRIOR TO FINAL ACCEPTANCE.

dmg D. MARK GOODWIN & ASSOCIATES, P.A.
CONSULTING ENGINEERS
P. O. BOX 90606
ALBUQUERQUE, NEW MEXICO 87199
(505) 828–2200, FAX (505) 797–9539

REV.	SHEETS	CITY ENGINEER	DATE	USER DEPARTMENT	DATE	USER DEPARTMENT	DATE

CAUTION:
NOTE THAT ALL EXISTING UTILITIES MAY NOT BE SHOWN. ALL EXISTING SERVICE CONNECTIONS ARE NOT SHOWN. ANY EXISTING UTILITIES THAT ARE SHOWN ARE APPROXIMATE LOCATION ONLY. IT SHALL BE THE SOLE RESPONSIBILITY OF THE CONTRACTOR TO CONTACT ALL THE UTILITY OWNERS AND TO CONDUCT ALL NECESSARY FIELD INVESTIGATIONS PRIOR TO ANY EXCAVATIONS TO DETERMINE THE ACTUAL LOCATION OF UTILITIES AND OTHER IMPROVEMENTS.

DRB NO. 1003571

ENGINEERS STAMP & SIGNATURE — JAMES D. HUGHES, NEW MEXICO, REGISTERED PROFESSIONAL ENGINEER, 11674 — 2-21-05

APPROVALS	ENGINEER	DATE
DRC CHAIRMAN		
TRANSPORTATION		
WATER/WASTEWATER		
HYDROLOGY		
CIP		
CONSTR. MNGMT.		
CONSTR. COORD.		

CITY PROJECT NO. 373.82

APPROVED FOR CONSTRUCTION

CITY ENGINEER — DATE

SHEET 1 OF 10

F:\A04JOBS\A4009SNH\amole ch...\Phase2\4009-ph2-Title.dwg, 2/19/2005 8:36:49 AM, JCC,JCC

A04jobs\A4009SNH\Amole Channel Plans\Phase2\4009-ph2-Title.dwg\2-19-05\DER NHE JCC

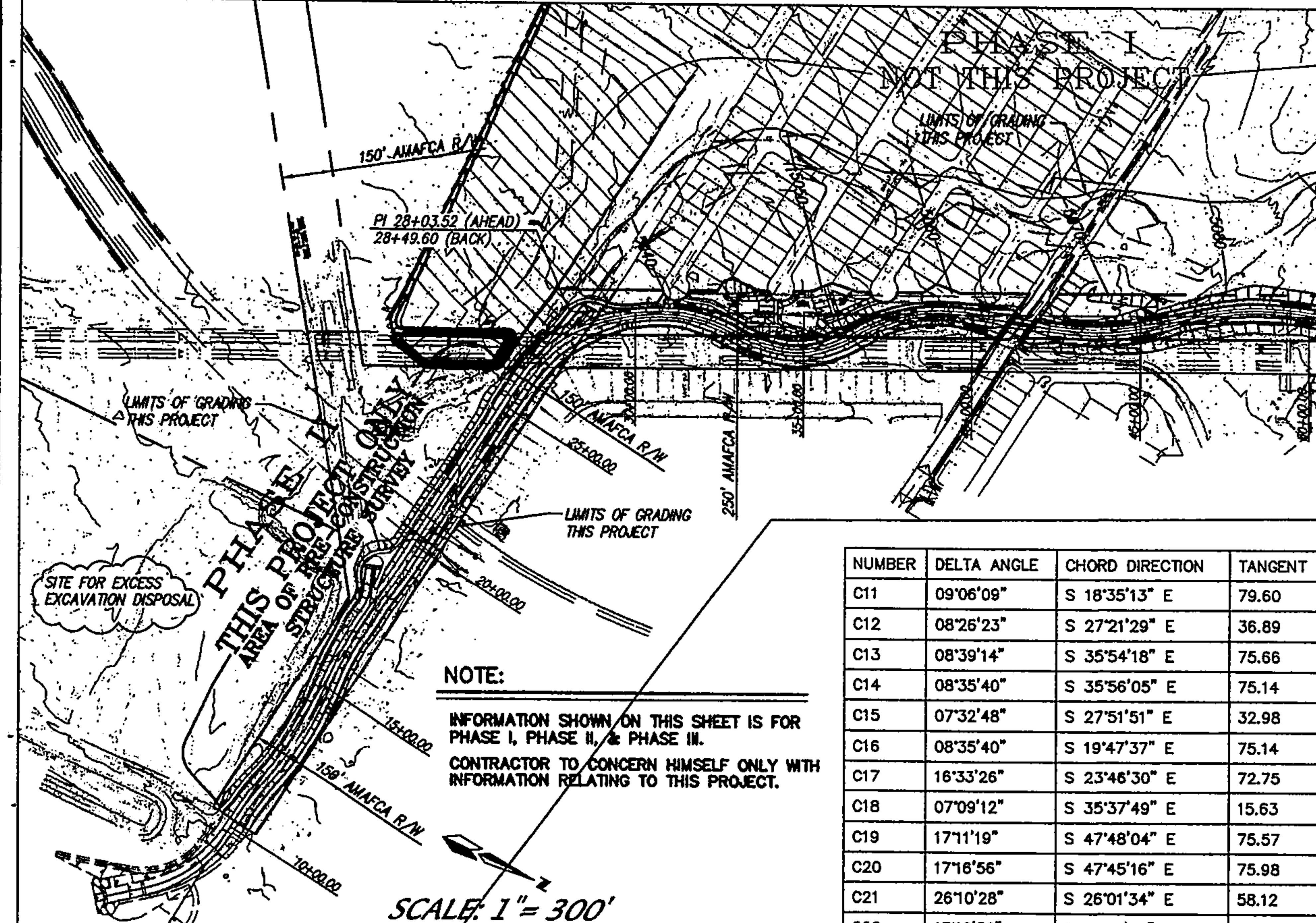

NOTE:

INFORMATION SHOWN ON THIS SHEET IS FOR PHASE I, PHASE II, & PHASE III.

CONTRACTOR TO CONCERN HIMSELF ONLY WITH INFORMATION RELATING TO THIS PROJECT.

NUMBER	DELTA ANGLE	CHORD DIRECTION	TANGENT	RADIUS	ARC LENGTH	CHORD LENGTH
C1	90°00'01"	S 70°17'25" E	25.00	25.00	39.27	35.36
C2	115°38'55"	S 32°40'35" W	39.74	25.00	50.46	42.32
C3	64°21'05"	S 57°19'25" E	15.73	25.00	28.08	26.63
C4	26°01'10"	N 12°16'49" W	170.51	738.00	335.14	332.27
C5	10°11'12"	S 24°50'56" E	44.57	500.00	88.90	88.78
C6	06°32'27"	S 23°01'33" E	28.57	500.00	57.08	57.05
C7	11°59'07"	S 32°17'20" E	104.97	1000.00	209.18	208.80
C8	08°35'40"	S 33°59'04" E	75.14	1000.00	150.00	149.86
C9	07°03'26"	S 26°09'31" E	30.83	500.00	61.59	61.55
C10	08°35'40"	S 18°19'58" E	75.14	1000.00	150.00	149.86

NUMBER	DELTA ANGLE	CHORD DIRECTION	TANGENT	RADIUS	ARC LENGTH	CHORD LENGTH
C11	09°06'09"	S 18°35'13" E	79.60	1000.00	158.87	158.70
C12	08°26'23"	S 27°21'29" E	36.89	500.00	73.65	73.58
C13	08°39'14"	S 35°54'18" E	75.66	1000.00	151.04	150.89
C14	08°35'40"	S 35°56'05" E	75.14	1000.00	150.00	149.86
C15	07°32'48"	S 27°51'51" E	32.98	500.00	65.86	65.81
C16	08°35'40"	S 19°47'37" E	75.14	1000.00	150.00	149.86
C17	16°33'26"	S 23°46'30" E	72.75	500.00	144.49	143.99
C18	07°09'12"	S 35°37'49" E	15.63	250.00	31.21	31.19
C19	17°11'19"	S 47°48'04" E	75.57	500.00	150.00	149.44
C20	17°16'56"	S 47°45'16" E	75.98	500.00	150.82	150.24
C21	26°10'28"	S 26°01'34" E	58.12	250.00	114.21	113.22
C22	17°16'56"	S 04°17'52" E	75.98	500.00	150.82	150.24
C23	17°11'19"	S 04°15'04" E	75.57	500.00	150.00	149.44
C24	09°10'02"	S 17°25'45" E	20.04	250.00	40.00	39.96
C25	17°11'19"	S 30°36'26" E	75.57	500.00	150.00	149.44
C26	17°11'19"	S 47°33'23" E	75.57	500.00	150.00	149.44
C27	09°10'02"	S 60°44'04" E	20.04	250.00	40.00	39.96
C28	17°29'37"	S 74°03'54" E	76.93	500.00	152.66	152.07
C29	06°20'36"	S 79°20'00" E	55.41	1000.00	110.71	110.65
C30	17°08'20"	S 84°43'52" E	150.69	1000.00	299.13	298.01
C31	19°31'19"	S 83°32'22" E	172.03	1000.00	340.72	339.07
C32	08°32'26"	S 78°02'56" E	74.67	1000.00	149.06	148.92
C33	46°40'31"	S 59°42'36" E	170.80	395.89	322.50	313.66

NUMBER	DIRECTION	DISTANCE
L1	N 64°42'35" E	110.07'
L2	S 25°17'24" E	588.84'
L3	S 25°17'24" E	176.00'
L4	S 25°08'53" E	429.09'
L5	S 25°08'53" E	365.71'
L6	N 89°29'58" W	108.25'
L7	S 89°29'58" E	120.03'
L8	S 25°08'53" E	558.15'
L9	S 89°49'19" E	55.32'
L10	S 25°12'42" E	54.71'
L11	S 25°12'42" E	128.29'
L12	S 25°12'42" E	1786.37'
L13	S 25°12'42" E	40.41'
L14	S 25°18'00" E	40.45'
L15	S 82°29'47" E	178.28'
L16	S 82°29'47" E	178.28'
L17	S 82°29'47" E	178.46'
L18	S 82°29'47" E	118.97'
L19	S 25°18'00" E	1233.91'
L20	S 82°30'18" E	496.28'
L21	S 82°28'03" E	248.65'
L22	S 82°29'02" E	825.90'
L23	S 81°47'06" E	247.35'
L24	S 82°29'16" E	374.79'
L25	S 89°23'07" W	250.88'
L26	S 00°26'42" W	199.75'
L27	S 00°24'08" W	376.01'
L28	N 88°39'11" W	200.26'
L29	S 89°58'59" W	705.91'

NUMBER	DIRECTION	DISTANCE
L30	N 00°13'04" E	465.54'
L31	S 55°30'40" W	510.53'
L32	N 24°29'33" W	330.33'
L33	N 82°30'25" W	305.57'
L34	N 25°18'00" W	178.47'
L35	N 25°18'00" W	1233.96'
L36	N 25°18'00" W	40.45'
L37	N 25°12'42" W	40.41'
L38	N 25°12'42" W	1125.14'
L39	N 25°12'42" W	206.91'
L40	N 25°12'42" W	397.75'
L41	N 25°12'42" W	128.29'
L42	N 25°12'42" W	86.08'
L43	N 89°49'19" W	24.02'
L44	N 25°12'33" W	575.00'
L45	N 79°39'10" E	155.17'
L46	N 79°39'10" E	155.17'
L47	N 31°24'01" W	101.28'
L48	N 25°16'00" W	130.18'
L49	N 00°47'58" W	228.19'
L50	N 60°03'28" E	39.74'
L51	S 00°43'46" W	137.49'
L52	N 25°16'00" W	368.67'
L53	N 25°16'00" W	1061.14'
L54	S 25°18'00" E	226.29'
L55	S 29°56'32" E	428.58'
L56	S 19°45'19" E	279.60'
L57	S 26°17'47" E	810.89'
L58	S 38°16'54" E	40.40'

NUMBER	DIRECTION	DISTANCE
L59	S 14°02'08" E	79.91'
L60	S 40°13'54" E	59.35'
L61	S 15°29'47" E	231.26'
L62	S 38°57'44" E	25.00'
L63	S 82°30'18" E	670.20'
L64	S 83°02'52" E	31.82'
L65	S 37°12'50" E	115.85'

ACS MONUMENT
"1-N8"
Y=1470679.06
X=348455.82
G-G=0.99967260
Δα=-00°17'26"
CENTRAL ZONE
(NAD 1927)

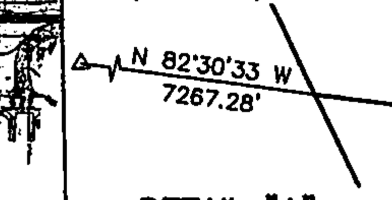

DETAIL "A"
N.T.S.

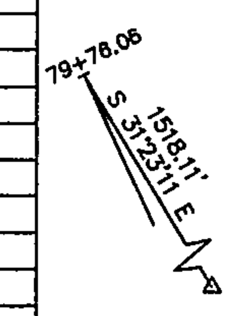

ACS MONUMENT
"TRANS"
Y=1471822.67
X=354899.45
G-G=0.99967921
Δα=-00°16'42"
CENTRAL ZONE
(NAD 1927/SLD 1929)
ELEVATION=5118.37

DETAIL "B"
N.T.S.

ACS MONUMENT
"TRANS"
Y=1471822.67
X=354899.45
G-G=0.99967921
Δα=-00°16'42"
CENTRAL ZONE
(NAD 1927/SLD 1929)
ELEVATION=5118.37

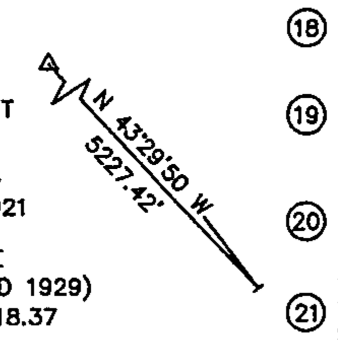

DETAIL "C"
N.T.S.

EASEMENTS

1. EXISTING 10' PNM & MST&T EASEMENT (DOCUMENT NO. 80-23229) (4-18-80, Bk. Misc. 766, Pg. 745)
2. EXISTING C.O.A. BLANKET DRAINAGE EASEMENT ACROSS TRACT E (11-28-94, 94C-393)
3. EXISTING 124' PUBLIC ROADWAY, WATERLINE AND SANITARY SEWER EASEMENT (06-05-02, 02C-197)
4. EXISTING 156' PUBLIC ROADWAY, WATERLINE AND SANITARY SEWER EASEMENT (06-05-02, 02C-197)
5. EXISTING 34' PUBLIC ROADWAY, UTILITY & DRAINAGE EASEMENT (05-21-02, 02C-184)
6. EXISTING 34' PUBLIC ROADWAY, UTILITY & DRAINAGE EASEMENT (01-16-01, 2001C-20)
7. EXISTING 60' PUBLIC ROADWAY, UTILITY & DRAINAGE EASEMENT (05-21-02, 02C-184) (TO BE VACATED BY EL RANCHO GRANDE, UNIT 9B PLAT)
8. 60' BLAKE ROAD S.W., NO DEDICATION DOCUMENT AVAILABLE
9. 124' PUBLIC ROADWAY, WATERLINE AND SANITARY SEWER EASEMENT (08-15-03, 03C-248)
10. 60' PUBLIC ROADWAY, UTILITY & DRAINAGE EASEMENT (03-21-03, 03C-73)
11. EXISTING EASEMENTS TO ACCOMMODATE THE EXISTING 100 YEAR STORM FLOWS FOR AMAFCA DRAINAGE CONTROL. SUCH EASEMENTS ARE TO RUN WITH THE LAND BUT MAY BE MODIFIED, REMOVED, OR REPLACED AS NECESSARY AND MUTUALLY AGREED TO BY AMAFCA AND OWNER(S) PENDING FUTURE PLATTING SUBMITTALS WHICH CONFORM TO A MORE COMPLETE OR IMPROVED ROUTING OF THE DRAINAGE FACILITIES. (05-06-88, C30-91) (TO BE VACATED BY EL RANCHO GRANDE, UNIT 9B PLAT)
12. EXISTING 100' PNM EASEMENT (04-12-56, BK. D348, PG. 43)
13. EXISTING 150' AMAFCA AMOLE ARROYO DRAINAGE EASEMENT (05-21-02, 02C-184) (TO BE VACATED BY EL RANCHO GRANDE, UNIT 9B PLAT)
14. EXISTING 156' PUBLIC INGRESS/EGRESS, WATER AND SANITARY SEWER EASEMENT (04-04-02, BK. A34, PG. 4273)
15. EXISTING 10' PNM & MST&T EASEMENT (01-17-86, BK.MISC. 312A, PGS. 840 & 850)
16. EXISTING 50' ACCESS & UNDERGROUND WATERLINE EASEMENT (10-25-85, BK.MISC. 284A, PG. 668)
17. EXISTING 10' PNM & MST&T EASEMENT (01-17-86, BK.MISC. 81A, PGS. 881 & 882)
18. EXISTING 10' PNM OVERHEAD LINE EASEMENT (05-06-86, C30-91)
19. EASEMENT FROM CITY OF ALBUQUERQUE PARKS AND RECREATION TO AMAFCA ( )
20. TEMPORARY AMAFCA SLOPE EASEMENT FUTURE CONSTRUCTION OF SLOPES PER PHASE 3 PLANS
21. TEMPORARY AMAFCA SLOPE EASEMENT FUTURE CONSTRUCTION OF SLOPES PER PHASE 3 PLANS
22. EXISTING AMAFCA ACCESS EASEMENT (04-12-04, A75-7181)

TRACT LEGEND

1. TRACT 9-B-2-A TO BE DEDICATED TO AMAFCA ON EL RANCHO GRANDE I, UNIT 9B PLAT
2. TRACT A-1 TO BE DEDICATED TO AMAFCA ON EL RANCHO GRANDE I, UNIT 9B PLAT
3. PORTION OF R/W 1, TO BE QUITCLAIMED FROM AMAFCA TO CURB INC. AND RE-PLATED BY SEPERATE PLAT. (#1)
4. PORTION OF R/W 1, TO REMAIN AMAFCAS
5. BLAKE ROAD SW RIGHT-OF-WAY, TO BE DEDICATED TO THE CITY OF ALBUQUERQUE BY EL RANCHO GRANDE I, UNIT 9B PLAT, (NOTE) PORTION OF EASEMENT NO. 13 REMAINS

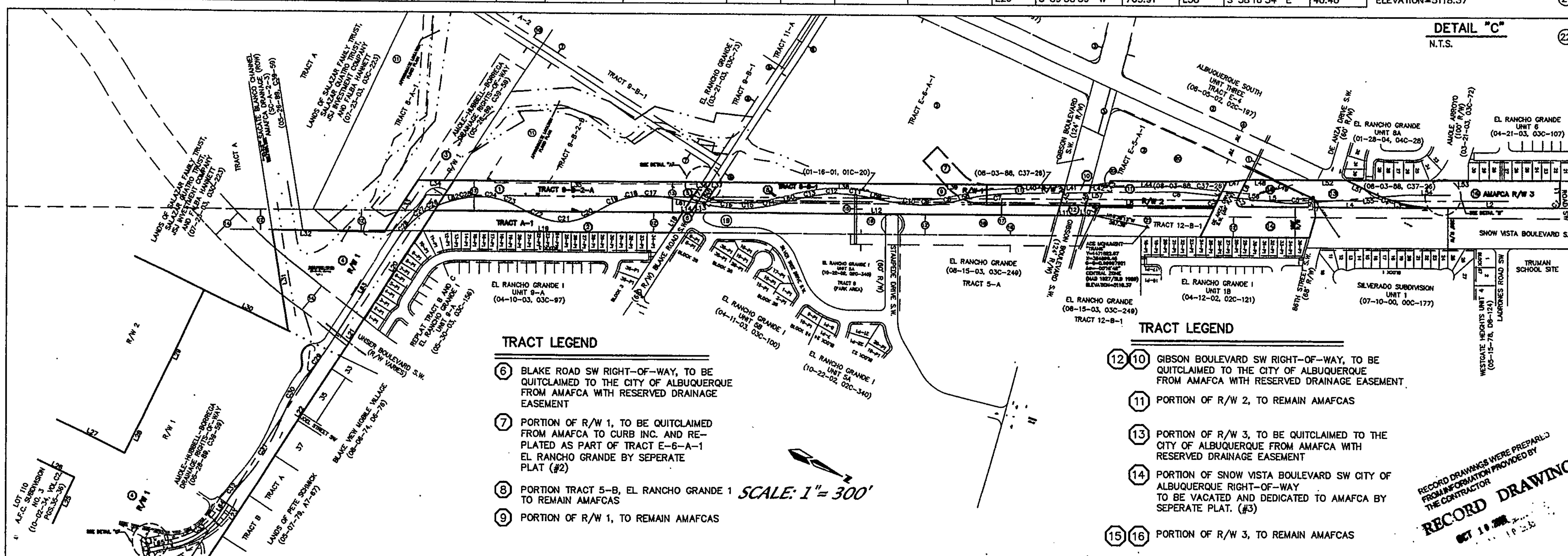

TRACT LEGEND

6. BLAKE ROAD SW RIGHT-OF-WAY, TO BE QUITCLAIMED TO THE CITY OF ALBUQUERQUE FROM AMAFCA WITH RESERVED DRAINAGE EASEMENT
7. PORTION OF R/W 1, TO BE QUITCLAIMED FROM AMAFCA TO CURB INC. AND RE-PLATED AS PART OF TRACT E-6-A-1 EL RANCHO GRANDE BY SEPERATE PLAT (#2)
8. PORTION TRACT 5-B, EL RANCHO GRANDE 1 TO REMAIN AMAFCAS
9. PORTION OF R/W 1, TO REMAIN AMAFCAS

TRACT LEGEND

12 10 GIBSON BOULEVARD SW RIGHT-OF-WAY, TO BE QUITCLAIMED TO THE CITY OF ALBUQUERQUE FROM AMAFCA WITH RESERVED DRAINAGE EASEMENT

11. PORTION OF R/W 2, TO REMAIN AMAFCAS
13. PORTION OF R/W 3, TO BE QUITCLAIMED TO THE CITY OF ALBUQUERQUE FROM AMAFCA WITH RESERVED DRAINAGE EASEMENT
14. PORTION OF SNOW VISTA BOULEVARD SW CITY OF ALBUQUERQUE RIGHT-OF-WAY TO BE VACATED AND DEDICATED TO AMAFCA BY SEPERATE PLAT. (#3)

15 16 PORTION OF R/W 3, TO REMAIN AMAFCAS

RECORD DRAWINGS WERE PREPARED FROM INFORMATION PROVIDED BY THE CONTRACTOR
RECORD DRAWING
OCT 10 2005

AS BUILT INFORMATION	
CONTRACTOR	SALLS BROS. CONST
WORK STAKED BY	RBSN DATE 2005
INSPECTOR'S ACCEPTANCE BY	LARKIN DATE 2005
FIELD VERIFICATION BY	[illegible] DATE 2005
DRAWINGS CORRECTED BY	R.L. LARKIN DATE 10-5-05
MICRO-FILM INFORMATION	
RECORDED BY	DATE
NO.	

BENCH MARKS

STATION "TRANS" IS LOCATED 6 MI. SOUTHWEST OF DOWNTOWN ALBUQUERQUE, IN THE R.O.W. OF A PLAINS ELECTRIC CO-OP TRANS-MISSION LINE. TO REACH STATION FROM INTERSECTION OF CENTRAL AVE. & 98TH ST. SW, GO SOUTH ON 98TH ST. 1.2 MI. TO JUNCTION WITH GIBSON BLVD. & SNOW VISTA BLVD., THEN SOUTHEAST ALONG SNOW VISTA AND CO-OP ELECTRIC TRANSMISSION LINE 0.85 MI. TO PYLON NUMBERED "52". STATION IS JUST EAST OF THIS POINT.
X = 354,899.45, Y = 1,471,822.67, ELEV. = 5118.37
(NAD 1927/SLD 1929)

SURVEY INFORMATION

FIELD NOTES		
NO.	BY	DATE

ENGINEER'S SEAL

JAMES D. HUGHES, NEW MEXICO, 11874, REGISTERED PROFESSIONAL ENGINEER
2-21-05

REVISIONS			
NO.	DATE	REMARKS	BY

DESIGN			
DESIGNED BY	JDH	DATE	05/04
DRAWN BY	DER	DATE	05/04
CHECKED BY	DMG	DATE	05/04

dmg MARK GOODWIN & ASSOCIATES, P.A.
CONSULTING ENGINEERS
P.O. BOX 90606
ALBUQUERQUE, NEW MEXICO 87199
(505) 828-2200, FAX (505) 797-9539

ALBUQUERQUE METROPOLITAN
ARROYO FLOOD CONTROL AUTHORITY

TITLE: AMOLE CHANNEL (PHASE II) AMOLE CHANNEL MASTER PLAN

DESIGN REVIEW COMMITTEE	CITY ENGINEER APPROVAL	MO./DAY/YR.	MO./DAY/YR.

LAST DESIGN UPDATE

CITY PROJECT NO.	ZONE MAP NO.	SHEET	OF
	N-9	2	10

A04jobs\A4009SNH\amole-channel-plans\Phase2\4009-Ph2-masterplan-r.dwg\02-24-05\DER NHE JCC

F:\A04JOBS\A4009SNH\amole ch...\Phase2\4009-ph2-masterplan-r.dwg, 2/25/2005 10:19:38 AM, JCC.JCC

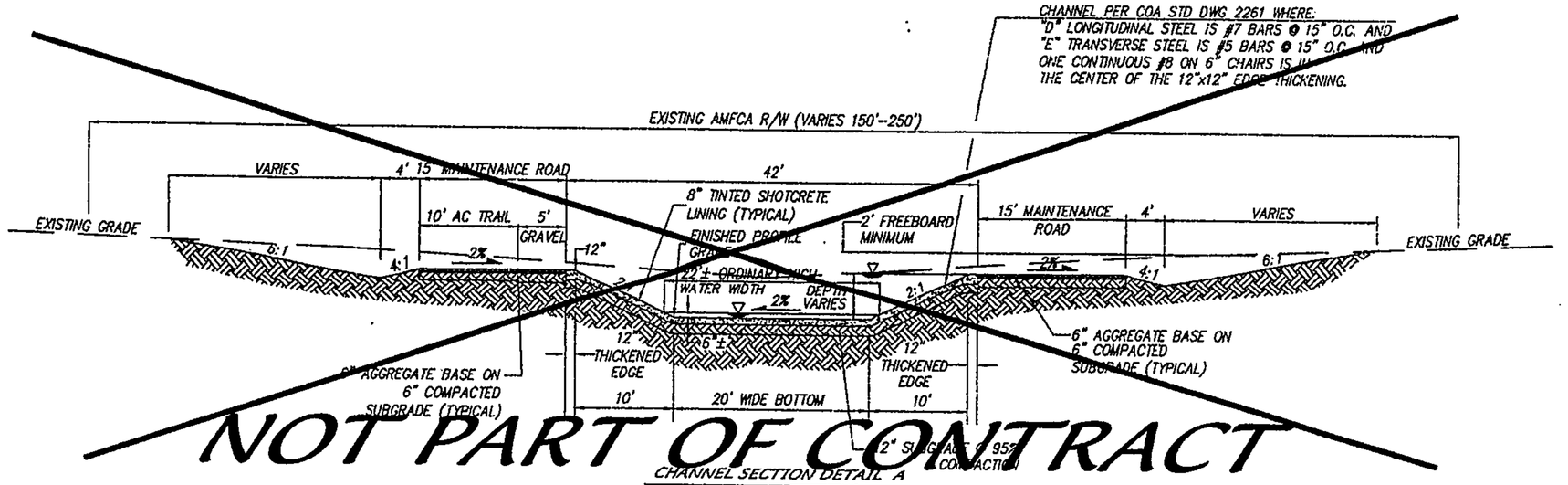

NOT PART OF CONTRACT

CHANNEL SECTION DETAIL A

N.T.S. STATION 27+82 TO 36+00
STATION 40+66 TO 79+00

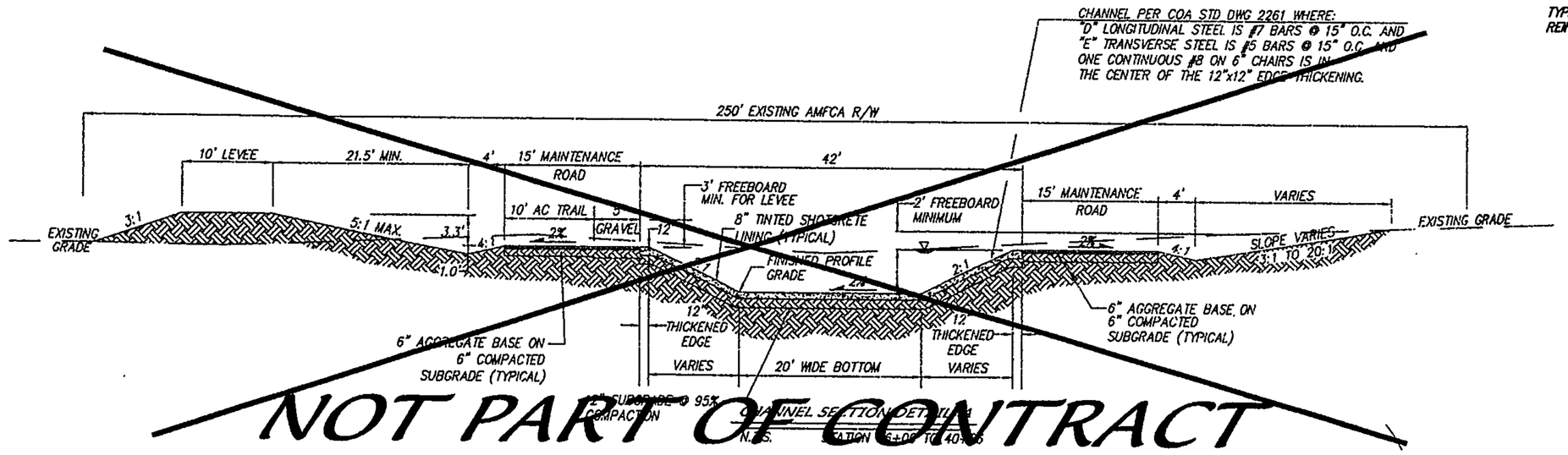

NOT PART OF CONTRACT

CHANNEL SECTION DETAIL B

N.T.S. STATION 10+15.00 TO 18+00.00

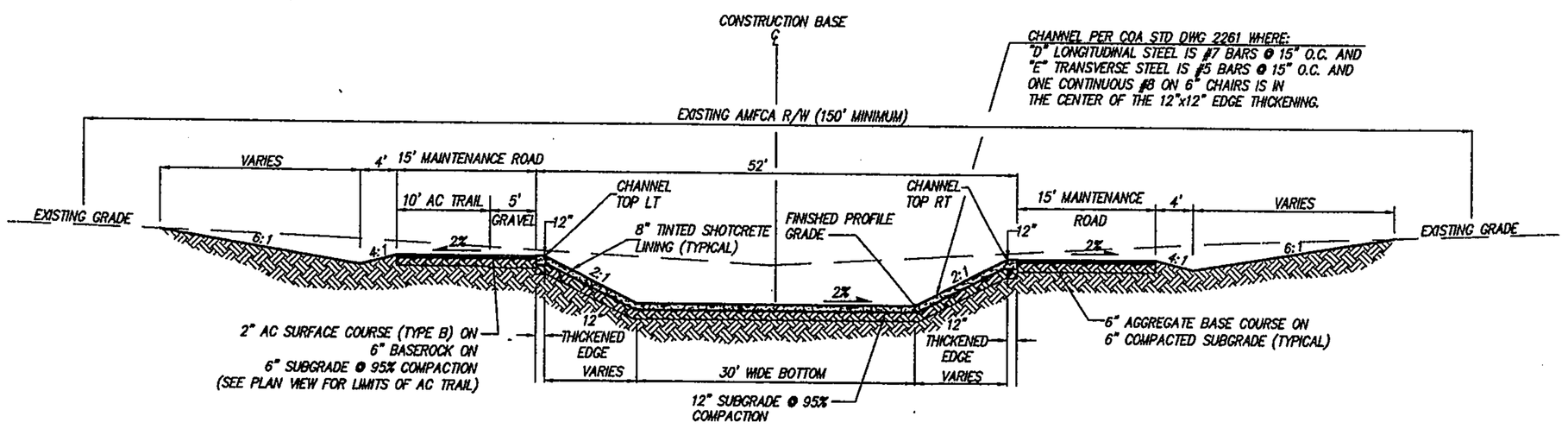

CHANNEL SECTION DETAIL B

N.T.S. STATION 10+15.00 TO 18+00.00

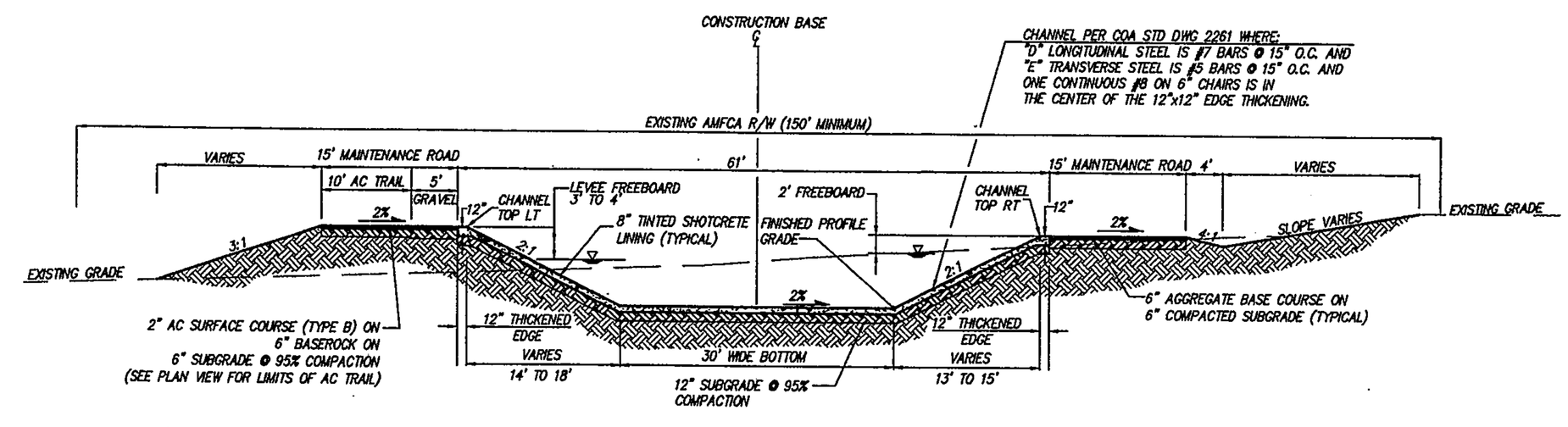

CHANNEL SECTION DETAIL C

N.T.S. STATION 18+00.00 TO 27+82.00

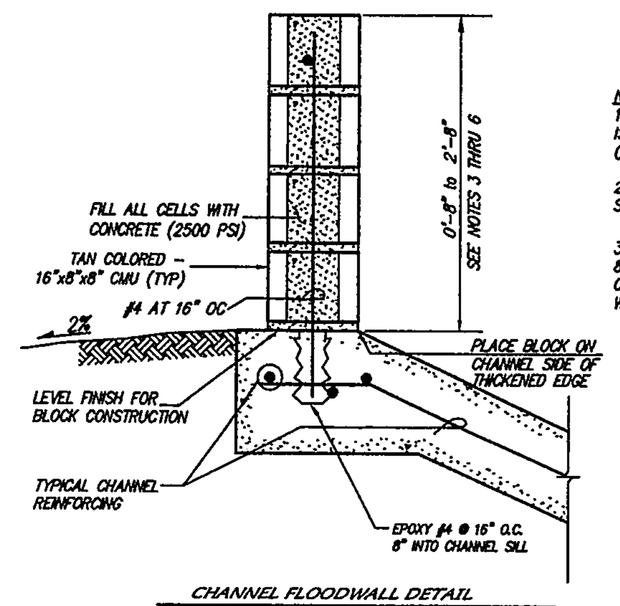

CHANNEL FLOODWALL DETAIL

N.T.S.

NOTE:
SEE P&P SHEETS FOR LOCATION & LIMITS

NOTES

NOTES:
1. BACKFILL WITHIN 5' OF WALL IS TO BE HAND-PLACED AND COMPACTED TO 90%
2. FOR CHANNEL WALL LOCATION, SEE PLAN & PROFILE SHEET.
3. TOP COURSE SHALL BE AN 8x8x16 BOND BEAM WITH CONTINUOUS #5 REBAR FOR WALL 2'-0" OR GREATER.

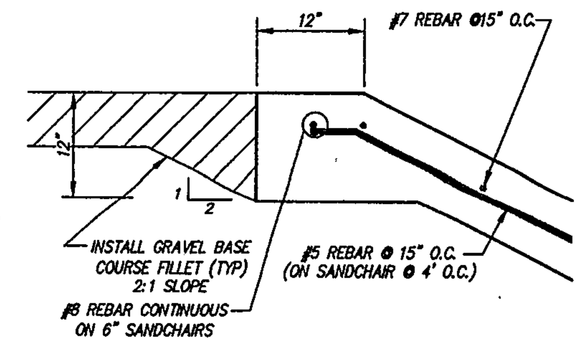

CHANNEL X-SECTION & THICKEN EDGE

N.T.S.

NOTE:
PAYMENT FOR EXTRA CONCRETE AND REINFORCEMENT IN THICKENED EDGE TO BE INCIDENTAL TO CHANNEL LINING MEASURED ON A (SY) BASIS ON THE EXPOSED CHANNEL SURFACE.

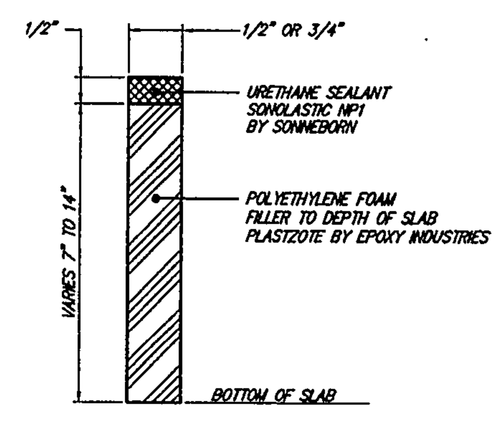

EXPANSION JOINT DETAIL

N.T.S.

RECORD DRAWINGS WERE PREPARED FROM INFORMATION PROVIDED BY THE CONTRACTOR.
RECORD DRAWING
OCT 10 2005

AS BUILT INFORMATION
CONTRACTOR: BLACK BROS. CO. INC.
STAKED BY: P.S.N. DATE: 2005
INSPECTOR'S NOTES BY: L.LARSEN DATE: 2005
FIELD VERIFICATION BY: P.S.N. DATE: 2005
CORRECTED BY: R. LARSEN DATE: 10-5-05
MICRO-FILM INFORMATION
RECORDED BY DATE
NO.

BENCH MARKS
STATION "TRANS" IS LOCATED 6 MI. SOUTHWEST OF DOWNTOWN ALBUQUERQUE, IN THE R.O.W. OF A PLAINS ELECTRIC CO-OP TRANSMISSION LINE. TO REACH STATION FROM INTERSECTION OF CENTRAL AVE. & 98TH ST., SW, GO SOUTH ON 98TH ST. 1.2 MI. TO JUNCTION WITH GIBSON BLVD. & SHOW VISTA BLVD., THEN SOUTHEAST ALONG SHOW VISTA AND CO-OP ELECTRIC TRANSMISSION LINE 0.85 MI. TO PYLON NUMBERED "52". STATION IS JUST EAST OF THIS POINT.
X = 354,898.45, Y = 1,471,822.67, ELEV. = 5118.37
(NAD 1927/STD 1929)

SURVEY INFORMATION
FIELD NOTES

NO.	BY	DATE

ENGINEER'S SEAL
JAMES D. HUGHES NEW MEXICO 14831 REGISTERED PROFESSIONAL ENGINEER
2-21-05

NO.	DATE	REMARKS	BY

REVISIONS

		DATE
DESIGNED BY	JDH	05/04
DRAWN BY	DER	05/04
CHECKED BY	DMG	05/04

dmg MARK GOODWIN & ASSOCIATES, P.A.
CONSULTING ENGINEERS
P.O. BOX 90606
ALBUQUERQUE, NEW MEXICO 87199
(505) 828-2200, FAX (505) 797-9539

CITY OF ALBUQUERQUE
PUBLIC WORKS DEPARTMENT

TITLE: AMOLE CHANNEL (PHASE II) TYPICAL SECTIONS & DETAILS

DESIGN REVIEW COMMITTEE	CITY ENGINEER APPROVAL	LAST DESIGN UPDATE	MO./DAY/YR.	MO./DAY/YR.

CITY PROJECT NO. | ZONE MAP NO. N-9 | SHEET 3 OF 10

A04jobs\A4009SNH\amole channel plans\Phase2\4009-ph2-dtl.dwg\02-24-05\DER NHE JCC

F:\A04JOBS\A4009SNH\amole channel plans\Phase2\4009-ph2-dtl.dwg, 2/23/2005 10:20:54 AM, JCC.JCC

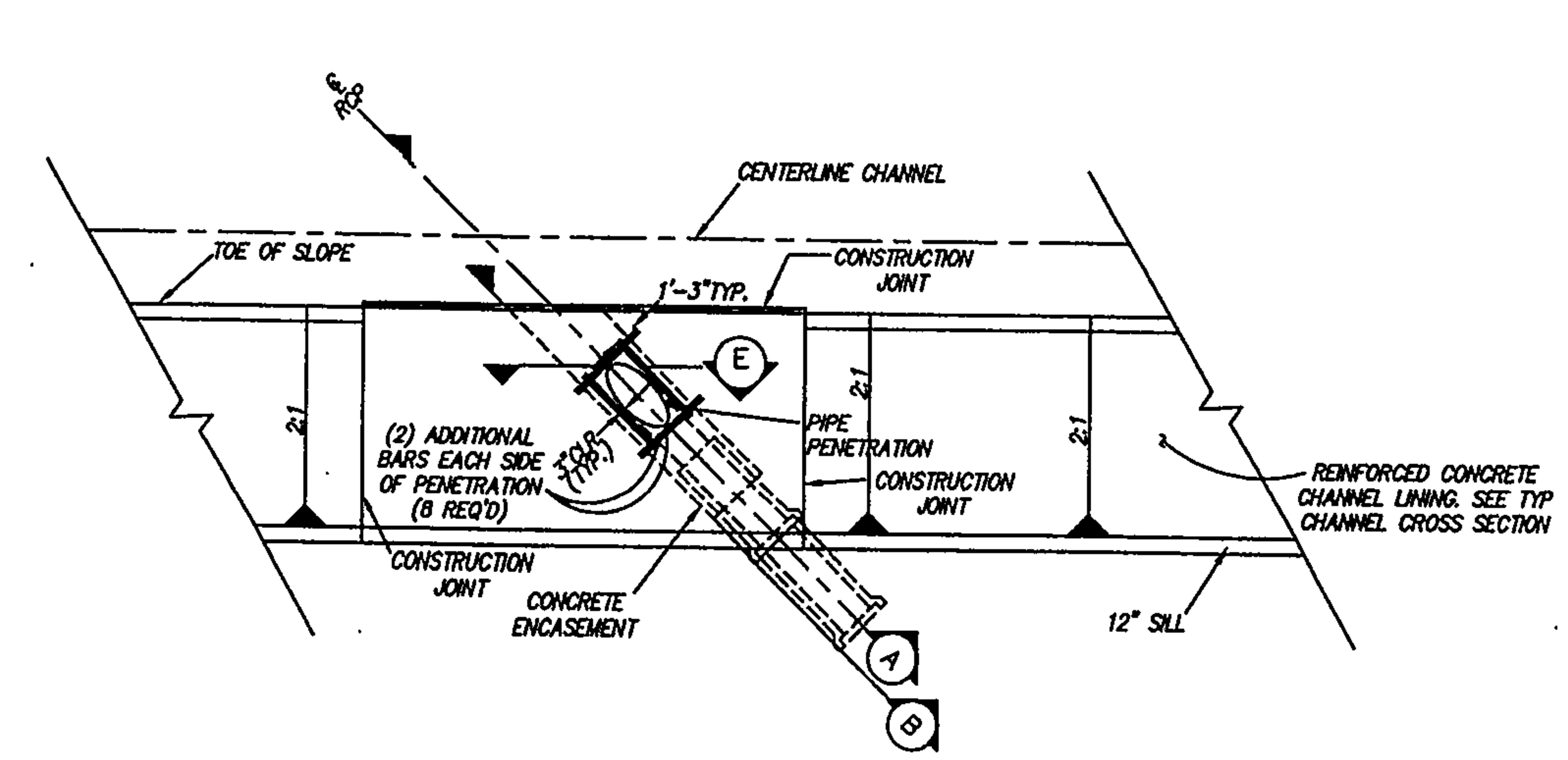

NOTE: CUT TYPICAL CHANNEL REINFORCING @ RCP PENETRATION. FIELD BEND CUT-BARS INTO CONCRETE ENCASEMENT 1'-3" MAINTAIN 3"CLR. (MIN) ON ALL SIDES.

TYPICAL RCP CHANNEL PENETRATION DETAIL

N.T.S.

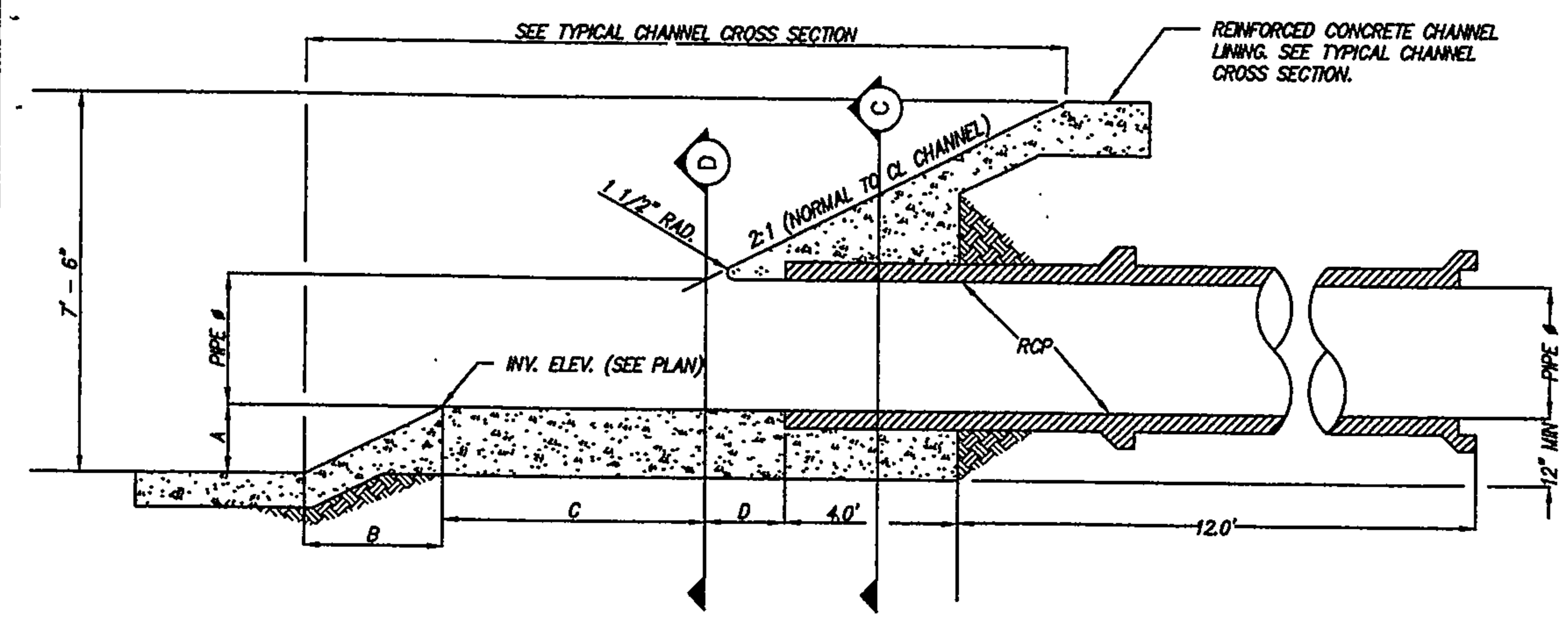

SECTION A – A

N.T.S.

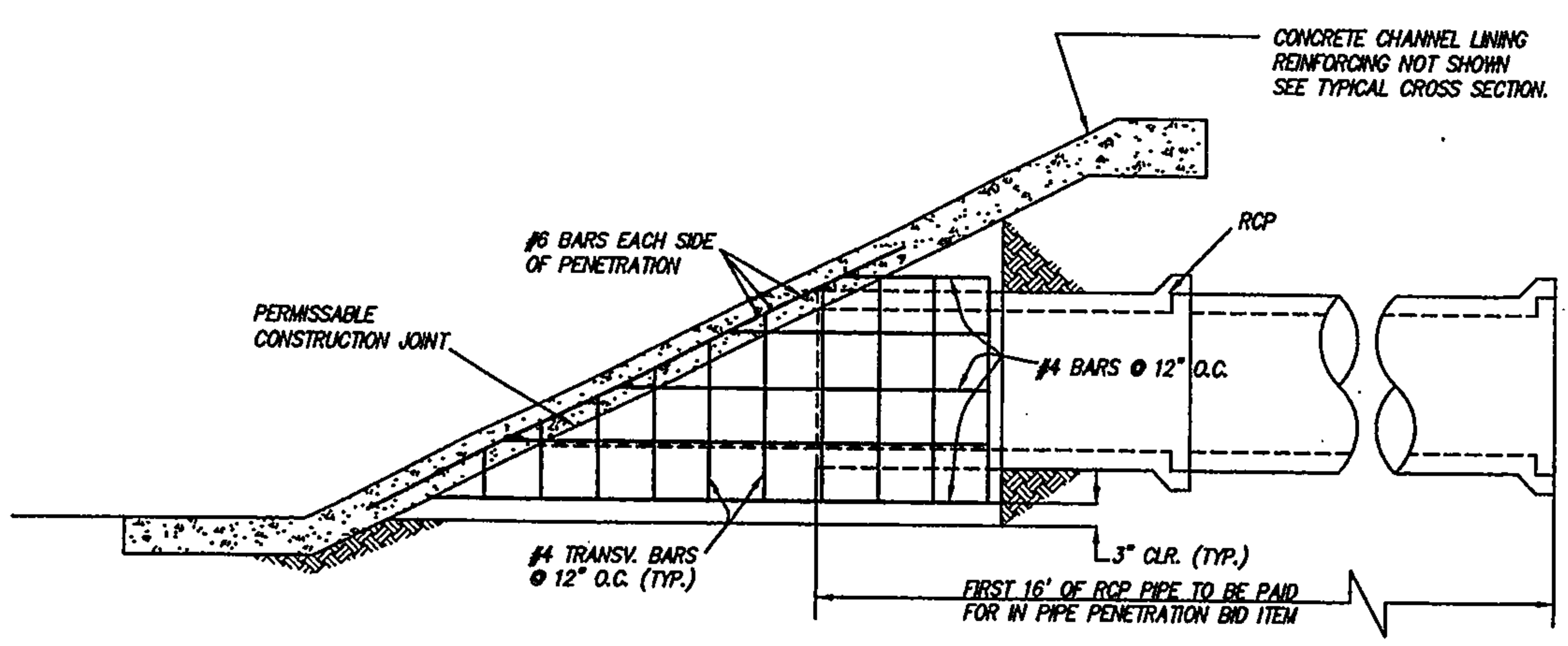

SECTION B – B

N.T.S.

TABLE OF DIMENSIONS								
CHANNEL STATION	PIPE DIAMETER	SLOPE	SKEW	CHANNEL DEPTH	INVERT TO INVERT A	B	C	D
20+25	4.5	2.50	45°	6.5	1.0	2.80	12.6	3.0
32+25	3.5	.	45°	6.2'	1.0	2.80	9.8	3.0
39+88	2.0	.	45°	7.0	1.0	2.80	5.6	3.0
42+45	4.0	2.67	45°	4.4	0.2	0.56	11.2	3.0
	FEET	PERCENT	DEGREES	FEET	FEET	FEET	FEET	FEET

NOTES

1. THE PIPE PENETRATION DETAILED HEREIN SHALL BE PAID FOR UNDER PIPE PENETRATION, (EACH) AND SHALL BE COMPENSATED FOR THE PENETRATION COMPLETE AND IN PLACE. INCLUDED IN THIS WORK (BUT NOT LIMITED TO) IS GRADING, SUBGRADE PREPARATION, REINFORCED CONCRETE, CONSTRUCTION JOINTS, CONCRETE PLACEMENT, 16' OF PROPER SIZE RCP, PRECAST PLUG IF NO CONNECTION IS MADE WITH THIS PROJECT, BACKFILL, AND FINISHING. NOTE: THE MEASUREMENT FOR CONCRETE CHANNEL LINING IS CONTINUOUS AND UNINTERRUPTED AT THE PENETRATION LOCATION.
2. THE TYPICAL TRANSVERSE AND LONGITUDINAL REINFORCEMENT SHALL BE CONTINUOUS THRU THE CONSTRUCTION JOINT LAPPED BAR SPLICES ADJACENT TO THE JOINT IS PERMITTED.
   #8 BAR LAP = 4'-2"
   #7 BAR LAP = 3'-2"
   #5 BAR LAP = 2'-2"

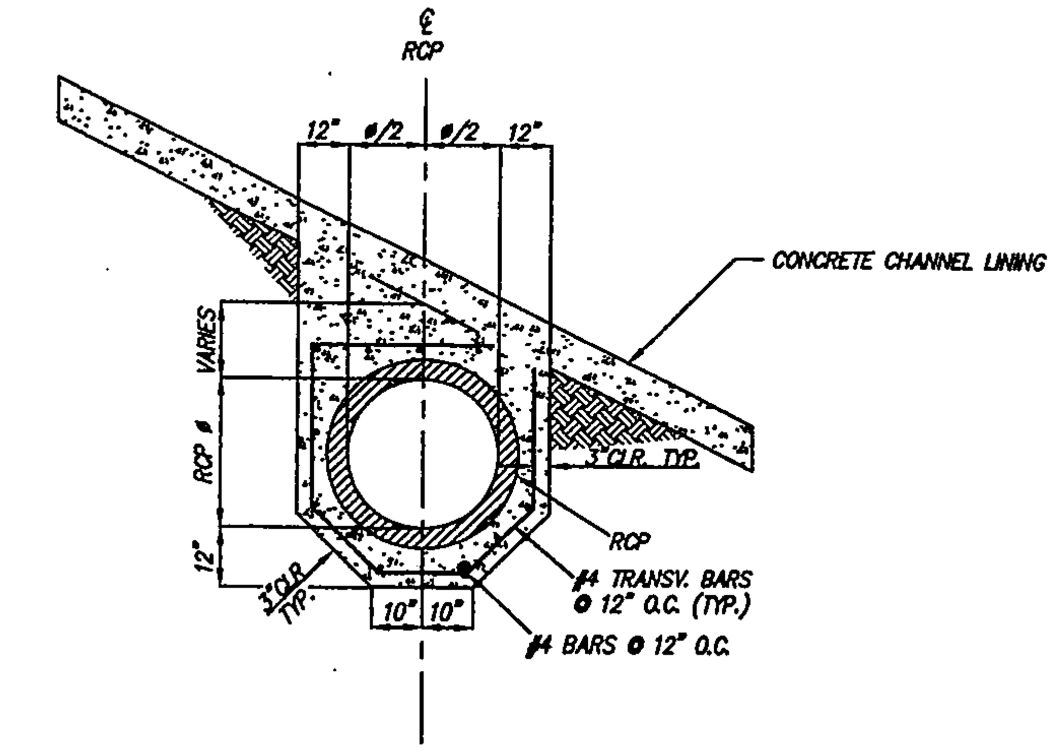

SECTION C – C

N.T.S.

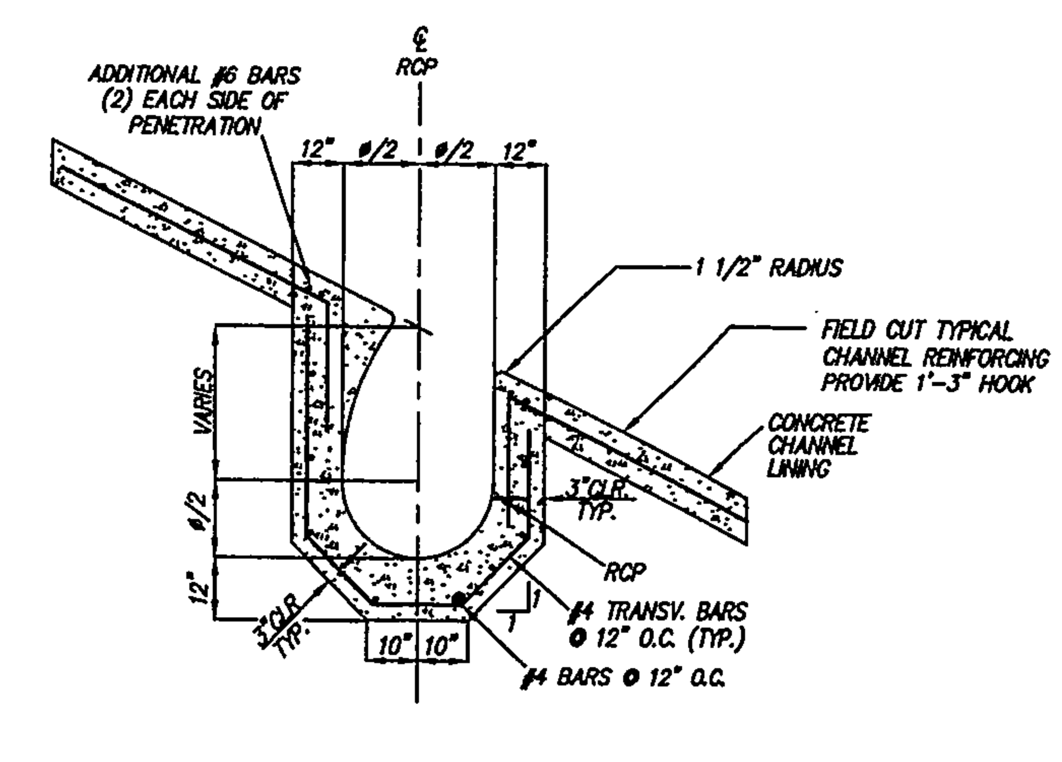

SECTION D – D

N.T.S.

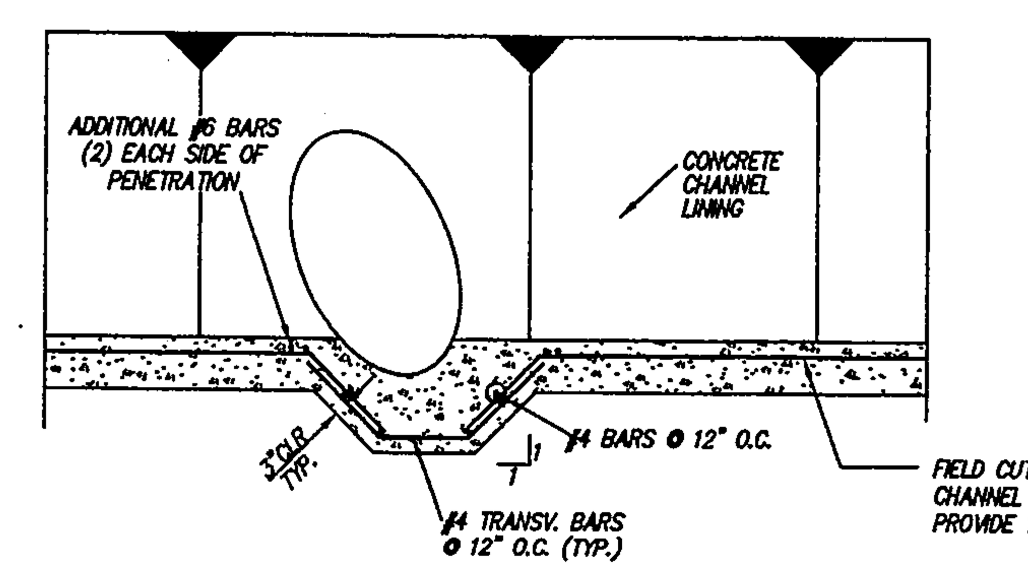

SECTION E – E

N.T.S.

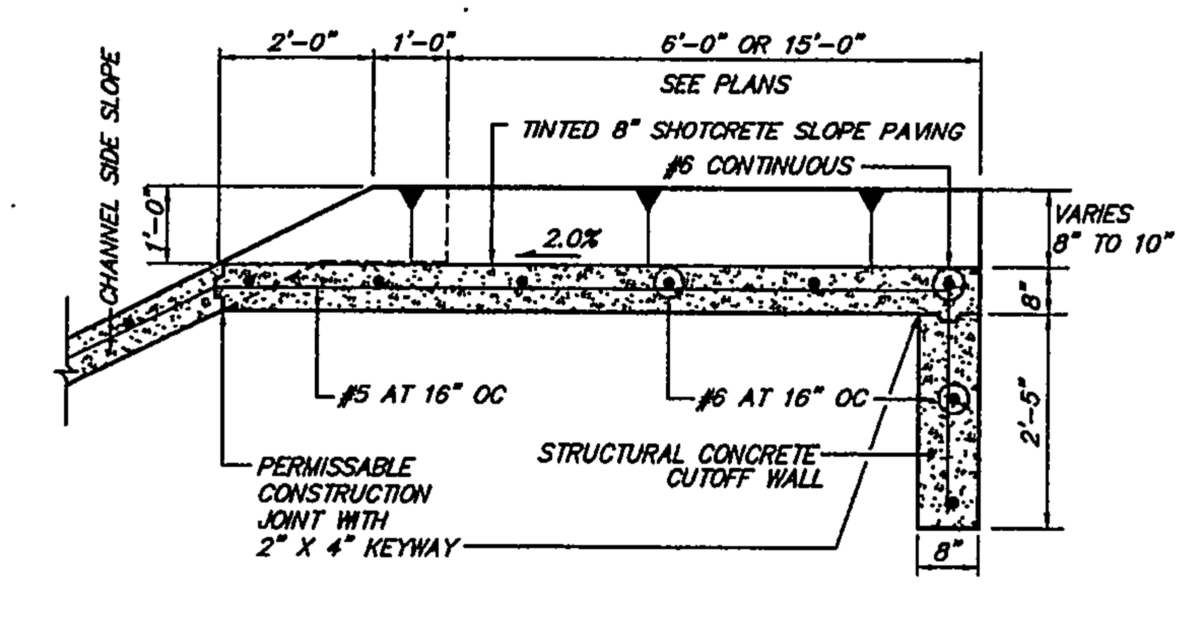

SECTION A–A

SCALE: NONE

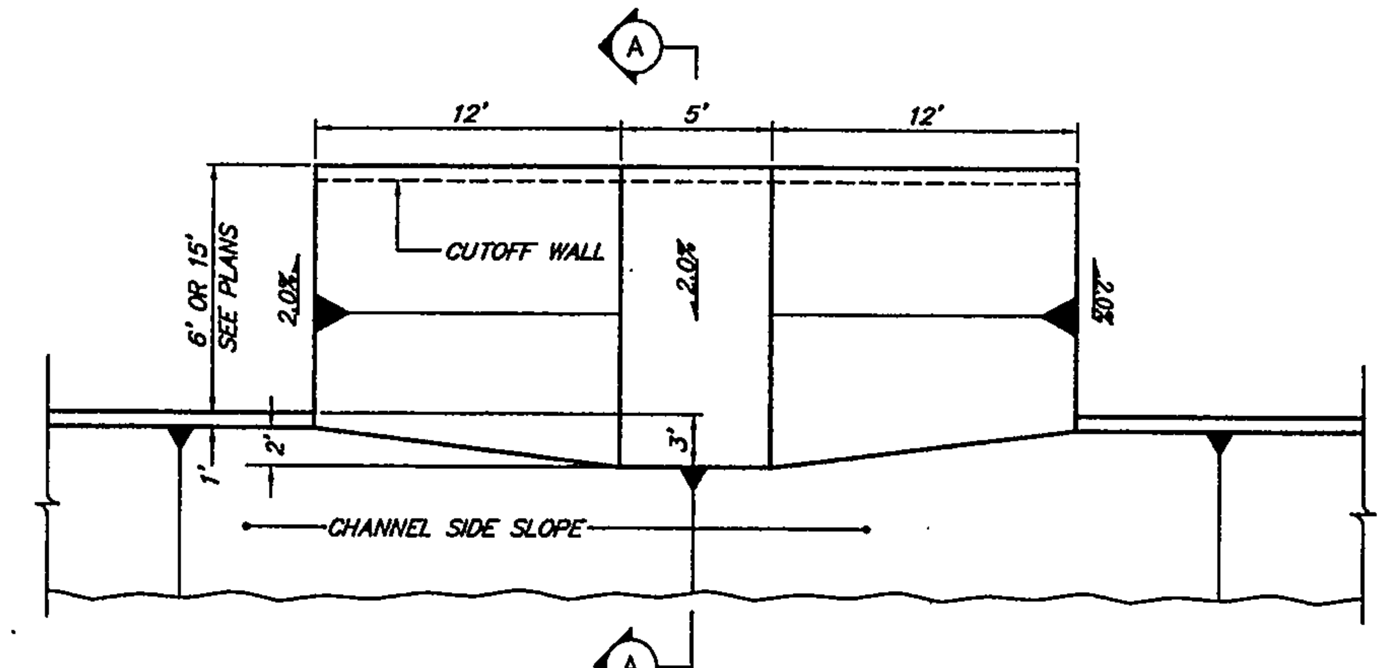

PLAN

SCALE: NONE

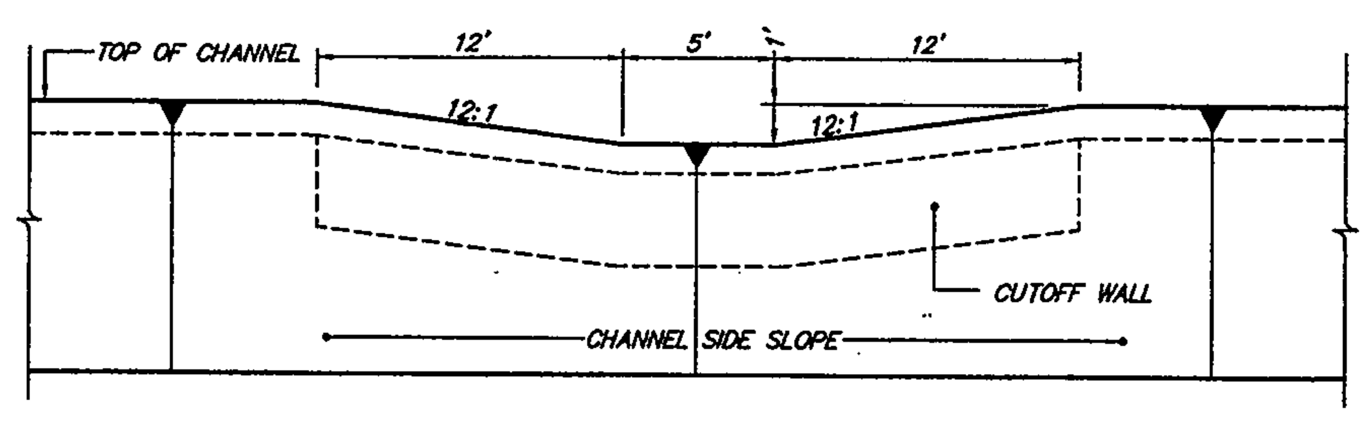

PROFILE

SCALE: NONE

CHANNEL RUNDOWN DETAILS– CHANNEL SIDE SLOPE

NOTE: SEE PLAN & PROFILE SHEETS FOR APPROPRIATE SPOT ELEVATIONS.

RECORD DRAWINGS WERE PREPARED FROM INFORMATION PROVIDED BY THE CONTRACTOR
RECORD DRAWING
OCT 10 2005

AS BUILT INFORMATION
CONTRACTOR SALLS BROS. CONST.
WORK STAKED BY BSN DATE 2005
INSPECTOR'S ACCEPTANCE BY LARKIN DATE 2005
FIELD VERIFICATION BY BSN. DATE 2005
DRAWINGS CORRECTED BY R. LARKIN DATE 10-5-05
MICRO-FILM INFORMATION
RECORDED BY DATE NO.

BENCH MARKS
STATION "TRANS" IS LOCATED 6 MI. SOUTHWEST OF DOWNTOWN ALBUQUERQUE, IN THE R.O.W. OF A PLAINS ELECTRIC CO-OP TRANSMISSION LINE. TO REACH STATION FROM INTERSECTION OF CENTRAL AVE. & 98TH ST. SW, GO SOUTH ON 98TH ST. 1.2 MI. TO JUNCTION WITH GIBSON BLVD. & SNOW VISTA BLVD. THEN SOUTHEAST ALONG SNOW VISTA AND CO-OP ELECTRIC TRANSMISSION LINE 0.85 MI. TO PYLON NUMBERED "52". STATION IS JUST EAST OF THIS POINT.
X = 354,899.45, Y = 1,471,822.67, ELEV. = 5118.37
(NAD 1927/SLD 1929)

SURVEY INFORMATION
FIELD NOTES
NO. | BY | DATE

ENGINEER'S SEAL
JAMES D. HUGHES NEW MEXICO 11874 REGISTERED PROFESSIONAL ENGINEER
5-12-2

NO.	DATE	REMARKS	BY

REVISIONS
DESIGN
DESIGNED BY G/K DATE 10/01
DRAWN BY M/R DATE 10/01
CHECKED BY DMG DATE 10/01

dmg MARK GOODWIN & ASSOCIATES, P.A. CONSULTING ENGINEERS
P.O. BOX 90606
ALBUQUERQUE, NEW MEXICO 87199
(505) 828-2200, FAX (505) 797-9539

ALBUQUERQUE METROPOLITAN ARROYO FLOOD CONTROL AUTHORITY

AMOLE CHANNEL

TITLE: GENERAL DETAILS

DESIGN REVIEW COMMITTEE | CITY ENGINEER APPROVAL | MO./DAY/YR. | LAST DESIGN UPDATE | MO./DAY/YR.

CITY PROJECT NO. | ZONE MAP NO. N-9 | SHEET 4 OF 10

A04jobs\A4009SNH\amole channel plans\Phase2\4009-Ph2-dtl_2.dwg\02-24-05\DER NHE JCC

F:\A04JOBS\A4009SNH\amole ch...\Phase2\4009-Ph2-dtl_2.dwg, 2/25/2005 10:21:30 AM, JCC,JCC

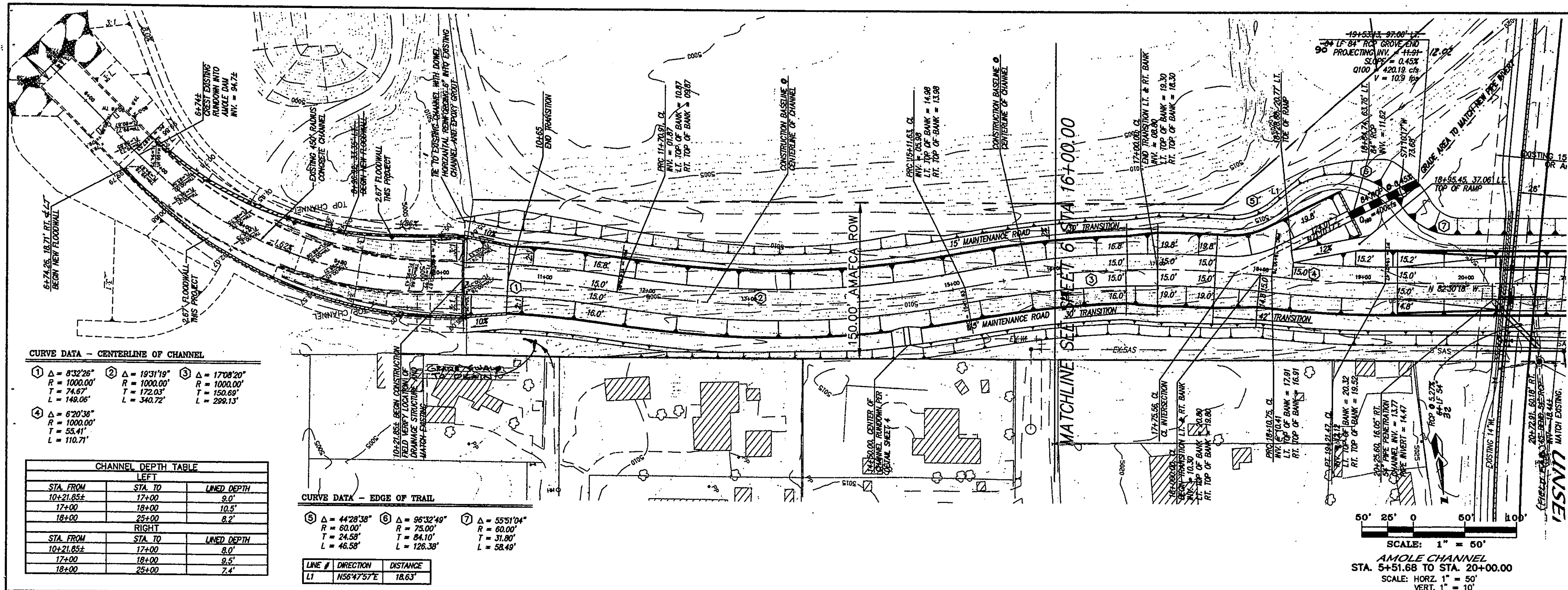

CURVE DATA – CENTERLINE OF CHANNEL

① Δ = 8°32'26", R = 1000.00', T = 74.67', L = 149.06'
② Δ = 19°31'19", R = 1000.00', T = 172.03', L = 340.72'
③ Δ = 17°08'20", R = 1000.00', T = 150.69', L = 299.13'
④ Δ = 6°20'36", R = 1000.00', T = 55.41', L = 110.71'

CHANNEL DEPTH TABLE

STA. FROM	STA. TO	LINED DEPTH
LEFT		
10+21.85±	17+00	9.0'
17+00	18+00	10.5'
18+00	25+00	8.2'
RIGHT		
10+21.85±	17+00	8.0'
17+00	18+00	9.5'
18+00	25+00	7.4'

CURVE DATA – EDGE OF TRAIL

⑤ Δ = 44°28'38", R = 60.00', T = 24.58', L = 46.58'
⑥ Δ = 96°32'49", R = 75.00', T = 84.10', L = 126.38'
⑦ Δ = 55°51'04", R = 60.00', T = 31.80', L = 58.49'

LINE #	DIRECTION	DISTANCE
L1	N56°47'57"E	18.63'

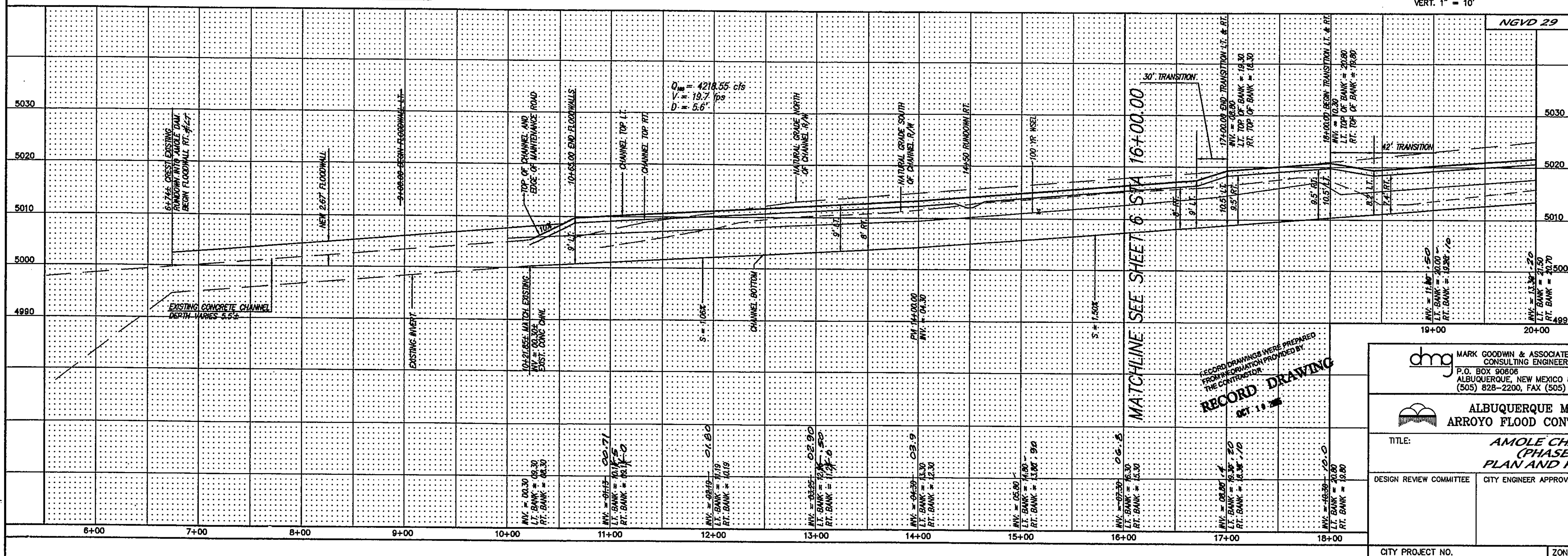

	AS BUILT INFORMATION
CONTRACTOR	GALLS BROS CONST.
WORK STAKED BY	BSN — DATE 2005
INSPECTOR'S ACCEPTANCE BY	LARKIN — DATE 2005
FIELD VERIFICATION BY	BSN — DATE 2005
DRAWINGS CORRECTED BY	RL LARKIN — DATE 10-05-05
MICRO-FILM INFORMATION	
RECORDED BY	DATE
NO.	

BENCH MARKS

STATION "TRANS" IS LOCATED 6 MI. SOUTHWEST OF DOWNTOWN ALBUQUERQUE, IN THE R.O.W. OF A PLAINS ELECTRIC CO-OP TRANSMISSION LINE. TO REACH STATION FROM INTERSECTION OF CENTRAL AVE. & 98TH ST. SW, GO SOUTH ON 98TH ST. 1.2 MI. TO JUNCTION WITH GIBSON BLVD. & SNOW VISTA BLVD., THEN SOUTHEAST ALONG SNOW VISTA AND CO-OP ELECTRIC TRANSMISSION LINE 0.85 MI. TO PYLON NUMBERED "52". STATION IS JUST EAST OF THIS POINT.
X = 354,899.45, Y = 1,471,822.67, ELEV. = 5118.37
(NAD 1927/SLD 1929)

SURVEY INFORMATION		
FIELD NOTES		
NO.	BY	DATE

ENGINEER'S SEAL: JAMES D. HUGHES, NEW MEXICO REGISTERED PROFESSIONAL ENGINEER 11574 — 2-21-05

NO.	DATE	REMARKS	BY

REVISIONS

DESIGN		
DESIGNED BY	JDH	DATE 05/04
DRAWN BY	DER	DATE 05/04
CHECKED BY	DMG	DATE 05/04

dmg MARK GOODWIN & ASSOCIATES, P.A. CONSULTING ENGINEERS
P.O. BOX 90606
ALBUQUERQUE, NEW MEXICO 87199
(505) 828-2200, FAX (505) 797-9539

ALBUQUERQUE METROPOLITAN ARROYO FLOOD CONTROL AUTHORITY

TITLE: **AMOLE CHANNEL (PHASE II) PLAN AND PROFILE**

DESIGN REVIEW COMMITTEE	CITY ENGINEER APPROVAL	LAST DESIGN UPDATE	MO./DAY/YR.	MO./DAY/YR.

CITY PROJECT NO.	ZONE MAP NO.	20+00	SHEET	OF
#	N-9		5	10

A04jobs\A4009SNH\amole channel plans\phase2\A4009-ph2-pp1.dwg\02-19-05\DER NHE JCC

F:\A04JOBS\A4009SNH\amole chan...\Phase2\4009-ph2-pp1.dwg, 2/25/2005 10:18:46 AM, JCC,JCC

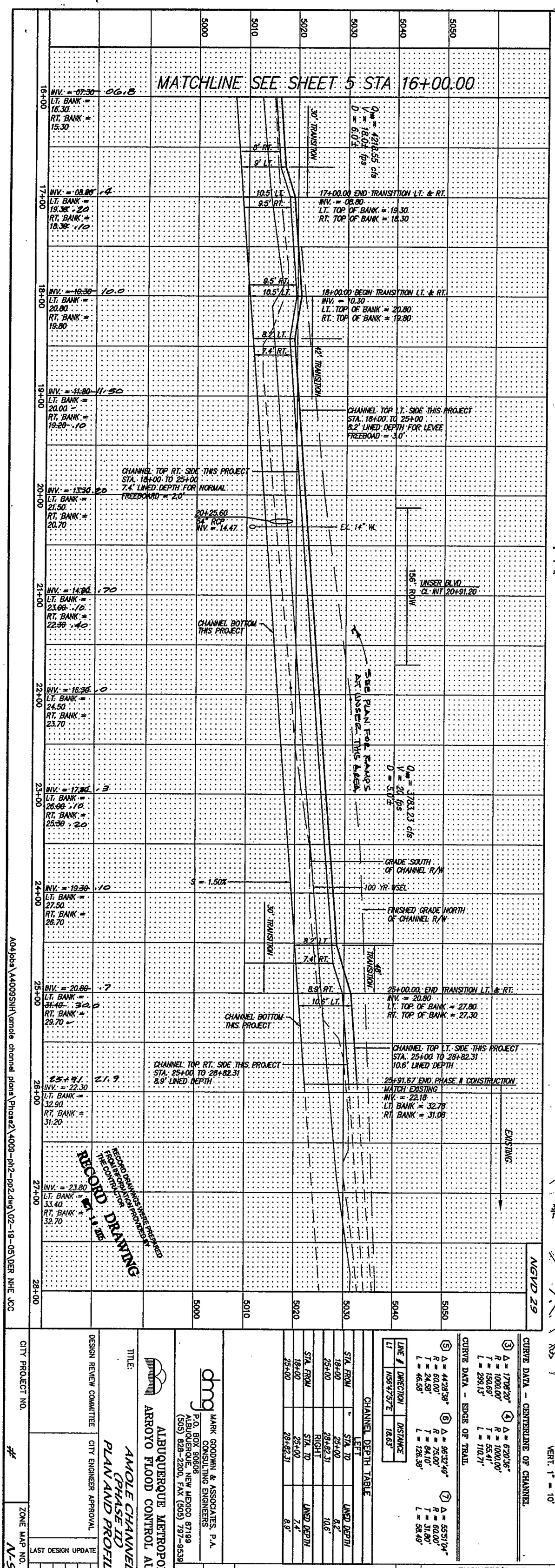

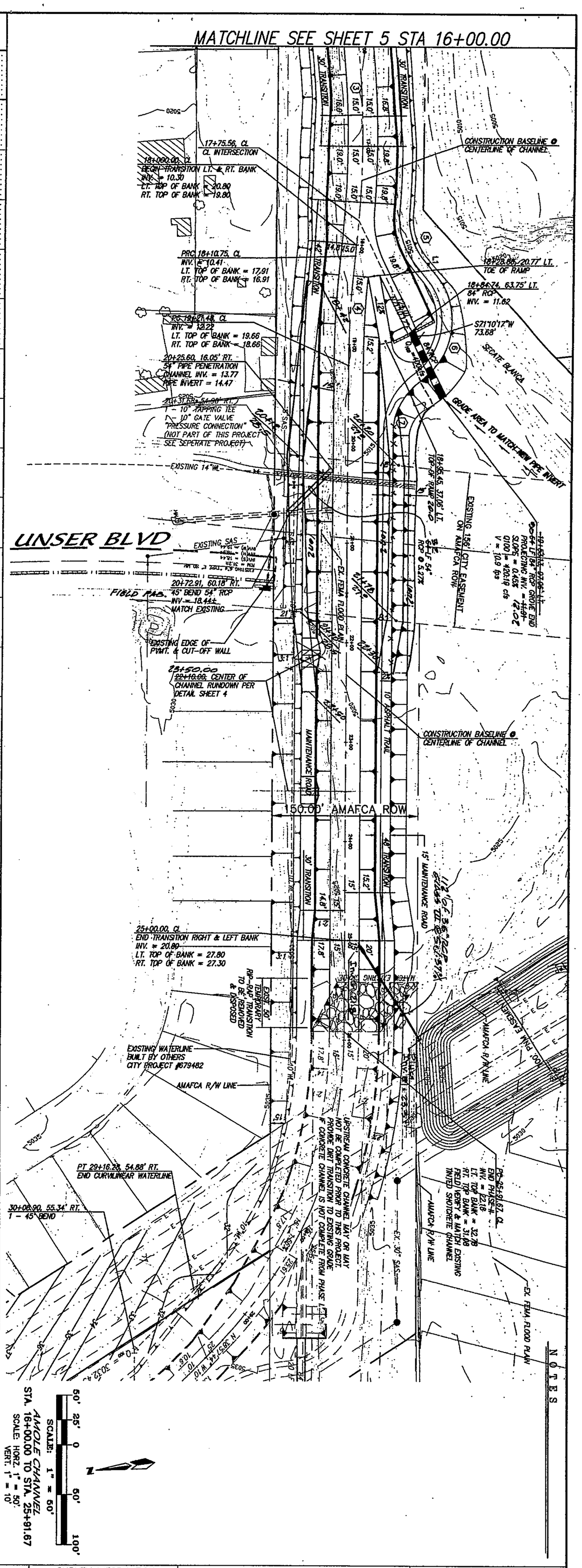

CURVE DATA – CENTERLINE OF CHANNEL

③ Δ = 17°08'20" R = 1000.00' T = 150.69' L = 299.13'

④ Δ = 6°20'36" R = 1000.00' T = 55.41' L = 110.71'

CURVE DATA – EDGE OF TRAIL

⑤ Δ = 44°28'38" R = 60.00' T = 24.59' L = 46.58'

⑥ Δ = 96°32'49" R = 75.00' T = 84.10' L = 126.38'

⑦ Δ = 55°51'04" R = 60.00' T = 31.90' L = 58.49'

LINE #	DIRECTION	DISTANCE
L1	N56°47'57"E	18.63'

CHANNEL DEPTH TABLE

LEFT		
STA. FROM	STA. TO	LINED DEPTH
18+00	25+00	8.2'
25+00	28+82.31	10.6'

RIGHT		
STA. FROM	STA. TO	LINED DEPTH
18+00	25+00	7.4'
25+00	28+82.31	8.9'

dmg
MARK GOODWIN & ASSOCIATES, P.A.
CONSULTING ENGINEERS
P.O. BOX 90606
ALBUQUERQUE, NEW MEXICO 87199
(505) 828-2200, FAX (505) 797-9539

ALBUQUERQUE METROPOLITAN ARROYO FLOOD CONTROL AUTHORITY

TITLE: AMOLE CHANNEL (PHASE II) PLAN AND PROFILE

NO.	DATE	REMARKS	BY
		REVISIONS	
		DESIGN	
DESIGNED BY	JDH	DATE 05/04	
DRAWN BY	DER	DATE 05/04	
CHECKED BY	DMG	DATE 05/04	

ENGINEER'S SEAL: JAMES D. HUGHEY, 11674, NEW MEXICO, REGISTERED PROFESSIONAL ENGINEER, 2-21-05

SURVEY INFORMATION — FIELD NOTES: NO. | BY | DATE

BENCH MARKS: STATION "TRANS" IS LOCATED 6 MI. SOUTHWEST OF DOWNTOWN ALBUQUERQUE, IN THE R.O.W. OF A PLAINS ELECTRIC CO-OP TRANSMISSION LINE. TO REACH STATION FROM INTERSECTION OF CENTRAL AVE. & 98TH ST. SW, GO SOUTH ON 98TH ST. 1.2 MI. TO JUNCTION WITH GIBSON BLVD. & SNOW VISTA BLVD., THEN SOUTHEAST ALONG SNOW VISTA AND CO-OP ELECTRIC TRANSMISSION LINE 0.85 MI. TO PYLON NUMBERED "52". STATION IS JUST EAST OF THIS POINT. X = 354,899.45, Y = 1,471,822.67, ELEV. = 5118.37 (NAD 1927/SLD 1929)

AS BUILT INFORMATION: CONTRACTOR SALLS BROS. CONTS. | WORK STAKED BY BSN DATE 2005 | INSPECTOR'S ACCEPTANCE BY LARKIN DATE 2005 | FIELD VERIFICATION BY BSN DATE 2005 | DRAWINGS CORRECTED BY RL LARKIN DATE 10-5-05

MICRO-FILM INFORMATION: RECORDED BY | DATE | NO.

CITY PROJECT NO. #

DESIGN REVIEW COMMITTEE | CITY ENGINEER APPROVAL | LAST DESIGN UPDATE | NO./DAY/YR. | NO./DAY/YR.

ZONE MAP NO. N-9

SHEET 6 OF 10

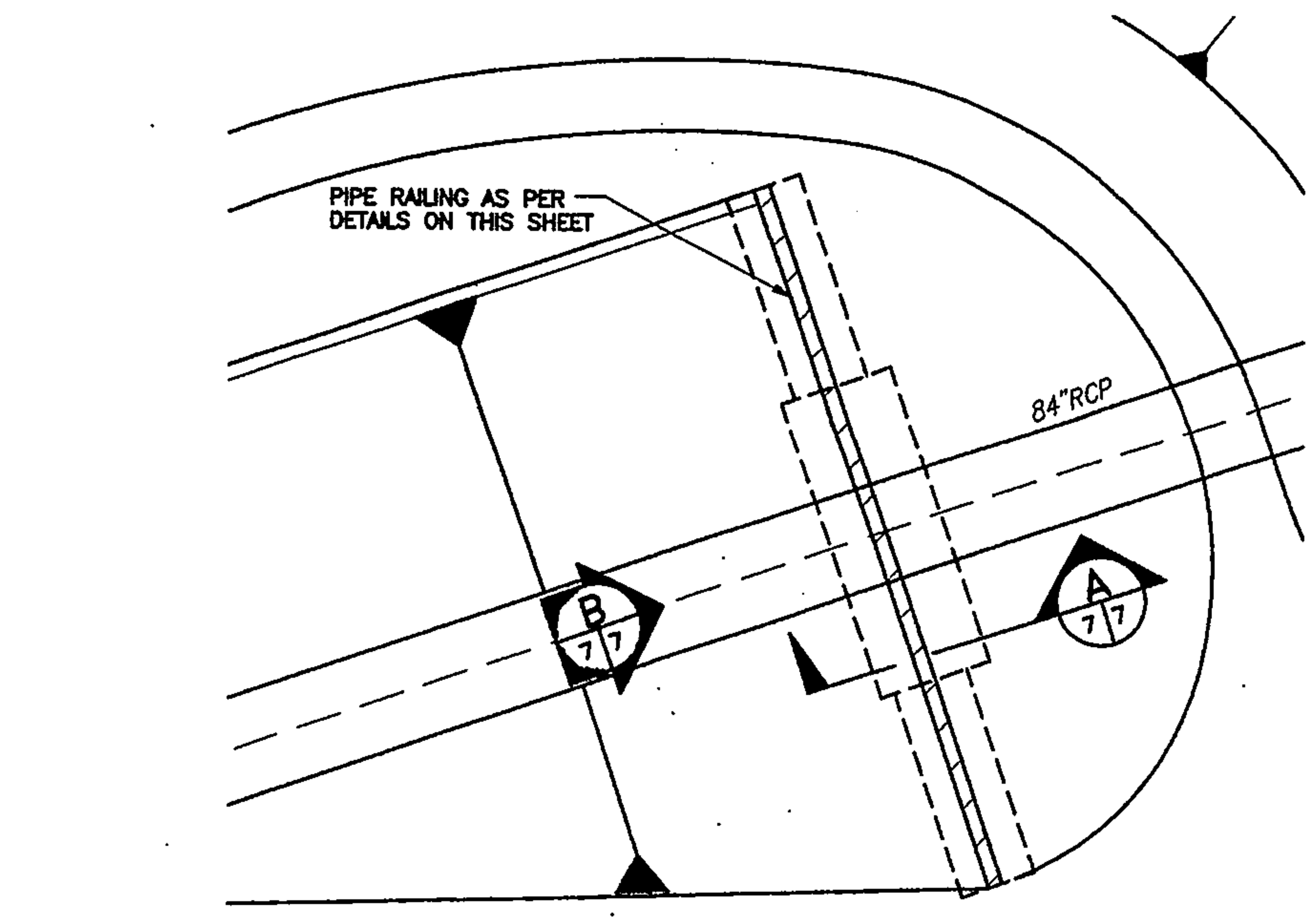

STA. 18+00
PLAN VIEW AMOLE CHANNEL PARTIAL HEADWALL PLAN
SCALE: 1"=10'-0"

NORTH (TRUE)

FOOTING SCHEDULE

"H"	"A"	"B"	"C"
10'-11"	8'-0"	3'-0"	4'-0"
8'-6"	5'-3"	2'-0"	2'-3"

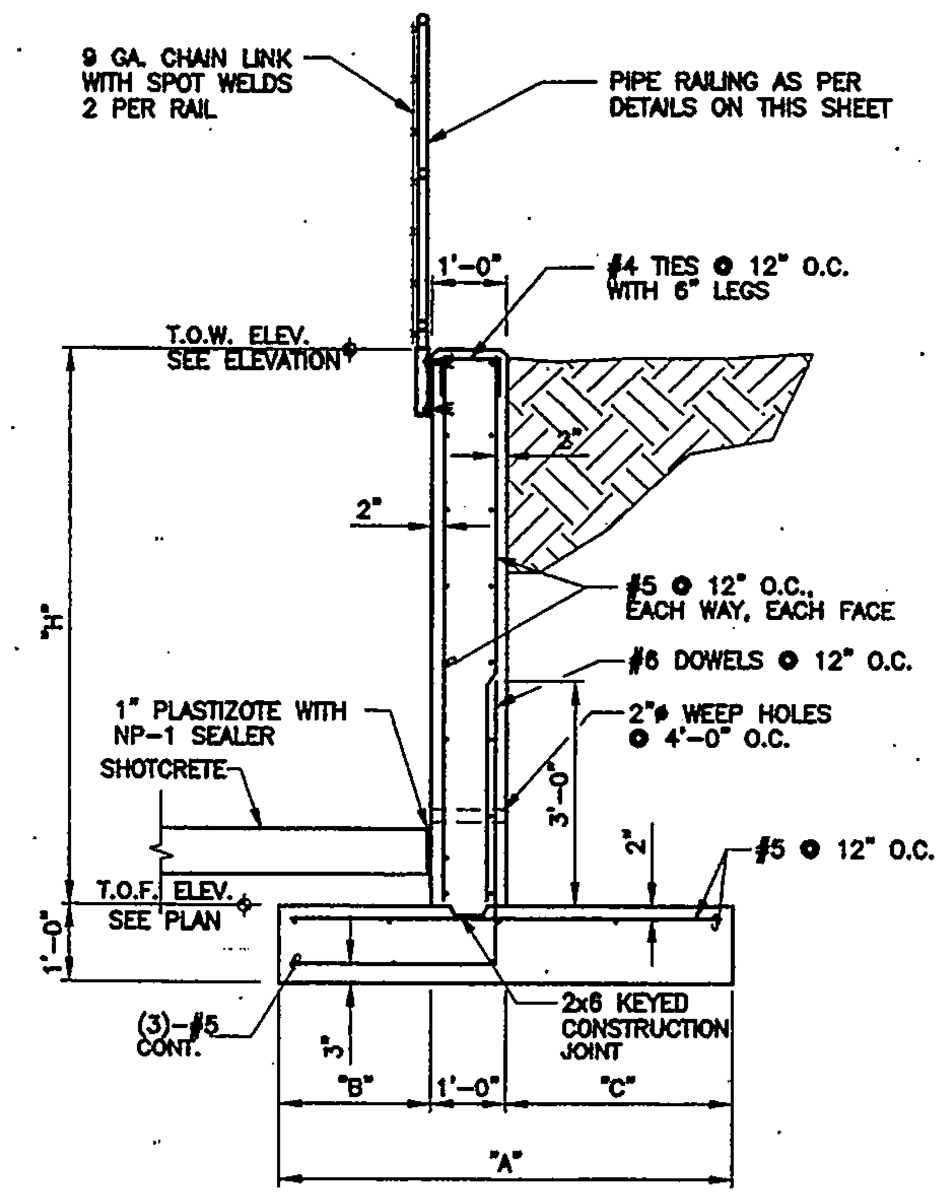

HEADWALL SECTION
1/2" = 1'-0"

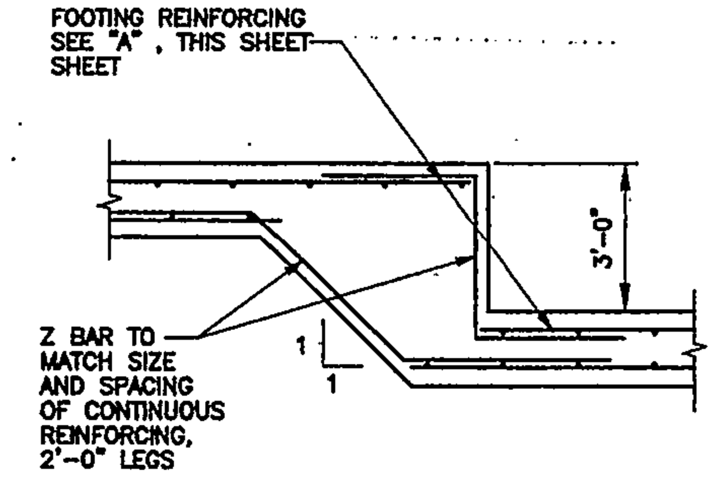

STEP FOOTING DETAIL
N.T.S.

GENERAL NOTES

1. REINFORCING BARS SHALL BE GRADE 60 UNLESS NOTED OTHERWISE.
2. ALL CONCRETE SHALL HAVE A MINIMUM 28 – DAY COMPRESSIVE STRENGTH OF 4000 PSI (CLASS AA) WITH 6% ENTRAINED AIR. CHAMFER ALL EXPOSED EDGES OF CONCRETE 3/4 INCH UNLESS OTHERWISE NOTED.
3. PROVIDE 12" SUBGRADE PREP AS PER COA SPECIFICATIONS UNDERNEATH HEAD WALL FOOTINGS. EXTEND SUBGRADE PREP 12" BEYOND THE EDGE OF FOOTING.

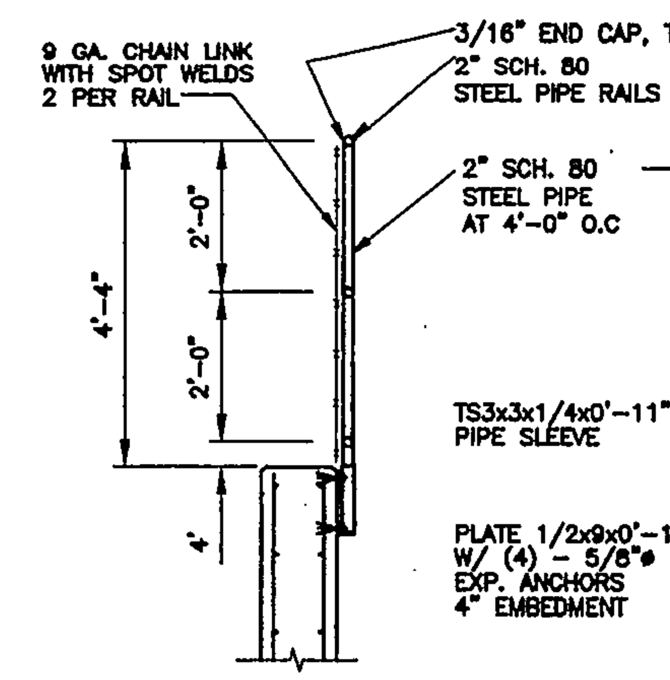

RAILING DETAIL
N.T.S.

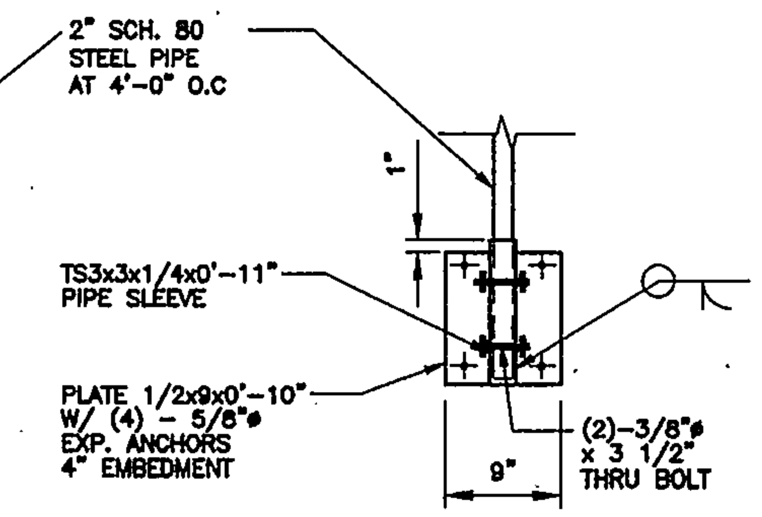

BASE DETAIL
N.T.S.

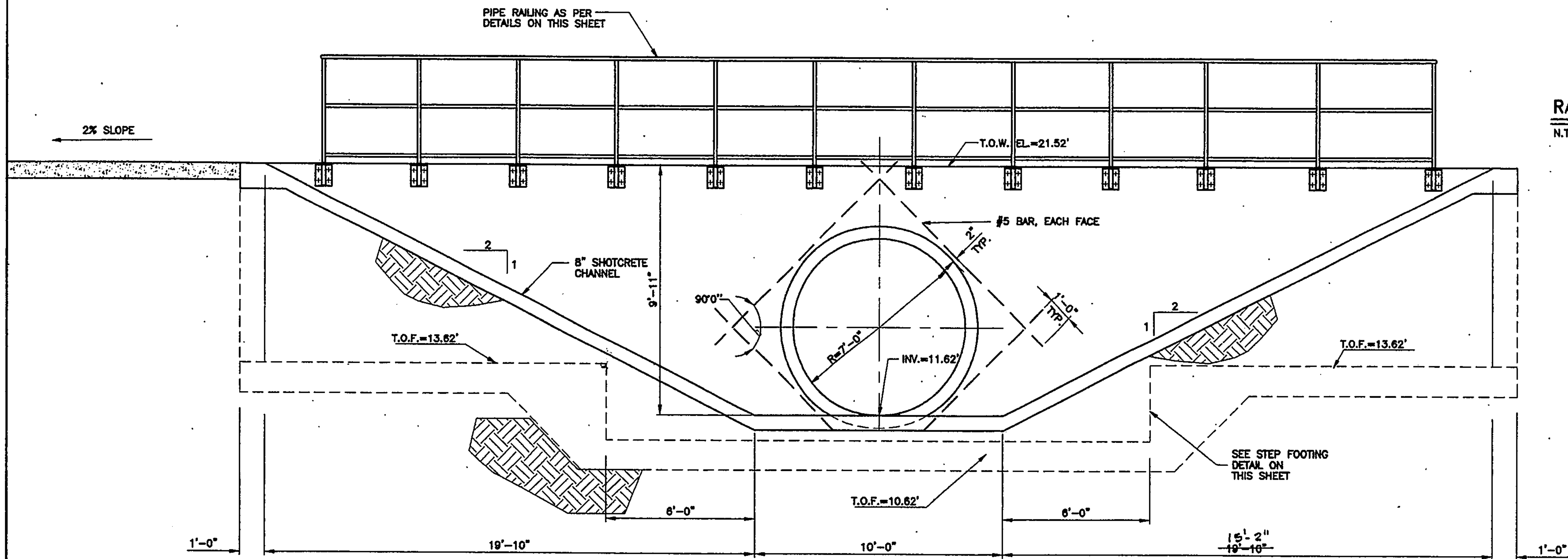

HEADWALL ELEVATION
SCALE: 3/8"=1'-0"

RECORD DRAWINGS WERE PREPARED FROM INFORMATION PROVIDED BY THE CONTRACTOR
RECORD DRAWING
OCT 10 2005

SCALE: 1" = 10'

CMX, Inc. 104144
Mechanical / Electrical / Structural Consulting Engineers
6400 Uptown Boulevard, N.E. Suite 500E, Albuquerque, New Mexico 87110
(505) 884-8868 FAX 884-7048

CITY OF ALBUQUERQUE
PUBLIC WORKS DEPARTMENT

TITLE: AMOLE CHANNEL IMPROVEMENTS
HEADWALL PARTIAL PLAN, SECTION & DETAILS

DESIGN REVIEW COMMITTEE	CITY ENGINEER APPROVAL	MO./DAY/YR.	MO./DAY/YR.

LAST DESIGN UPDATE

CITY PROJECT NO. 679483 | ZONE MAP NO. N-9 | SHEET 7 OF 10

NO.	DATE	REMARKS	BY

REVISIONS

DESIGN		
DESIGNED BY JPG	DATE	1/17/05
DRAWN BY TEP	DATE	1/17/05
CHECKED BY RJJ	DATE	1/17/05

ENGINEER'S SEAL: JOHN P. GIERSCH, NEW MEXICO, 14063, 1-17-05

SURVEY INFORMATION
FIELD NOTES

NO.	BY	DATE

BENCH MARKS

AS BUILT INFORMATION
CONTRACTOR SMITH'S PIPE CONST.
WORK STARTED BY RSAJ DATE 2005
INSPECTOR'S ACCEPTANCE BY LARKIN DATE 2005
FIELD VERIFICATION BY RSAJ DATE 2005
DRAWINGS CORRECTED BY RL LARKIN DATE 10-05-05
MICRO-FILM INFORMATION
RECORDED BY DATE
NO.

NOTES

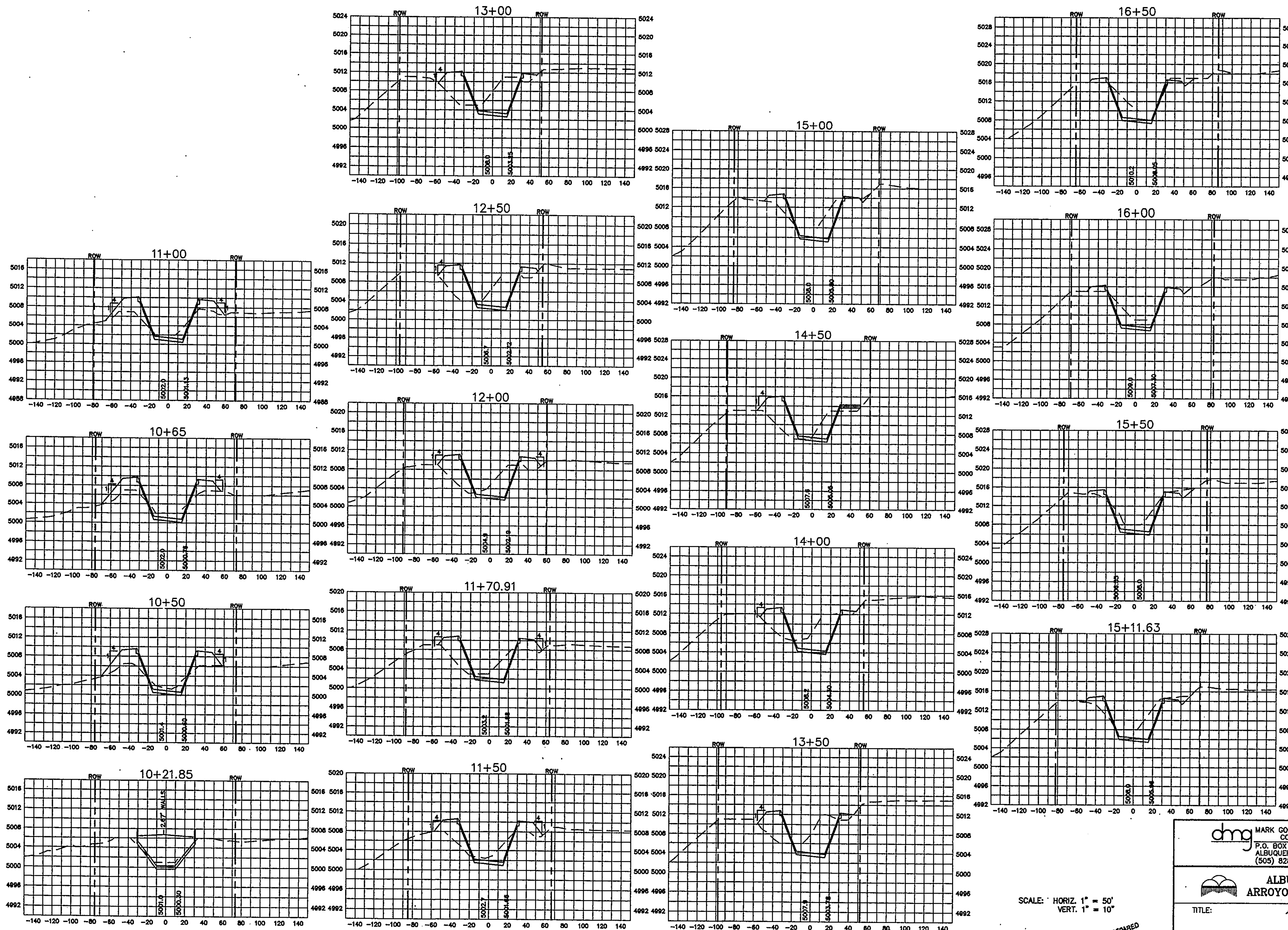

SCALE: HORIZ. 1" = 50'
VERT. 1" = 10"

RECORD DRAWINGS WERE PREPARED FROM INFORMATION PROVIDED BY THE CONTRACTOR

RECORD DRAWING
OCT 10 2005

A4009SNH/AMOLE CHANNEL PLANS/PH2-XSEC-BASE1 (LAYOUT1) 1-18-05 NHE

AS BUILT INFORMATION

CONTRACTOR SAUS BROS. CONST.
WORK STAKED BY BSN DATE 2005
INSPECTOR'S ACCEPTANCE BY LARKIN DATE 2005
FIELD VERIFICATION BY BSN DATE 2005
DRAWINGS CORRECTED BY RL LARKIN DATE 10-5-05

MICRO-FILM INFORMATION
RECORDED BY DATE
NO.

BENCH MARKS

STATION "TRANS" IS LOCATED 6 MI. SOUTHWEST OF DOWNTOWN ALBUQUERQUE, IN THE R.O.W. OF A PLAINS ELECTRIC CO-OP TRANSMISSION LINE. TO REACH STATION FROM INTERSECTION OF CENTRAL AVE. & 98TH ST. SW, GO SOUTH ON 98TH ST. 1.2 MI. TO JUNCTION WITH GIBSON BLVD. & SNOW VISTA BLVD., THEN SOUTHEAST ALONG SNOW VISTA AND CO-OP ELECTRIC TRANSMISSION LINE 0.85 MI. TO PYLON NUMBERED "52". STATION IS JUST EAST OF THIS POINT.
X = 354,899.45, Y = 1,471,822.67, ELEV. = 5018.57 NAD'27
SLD'29

SURVEY INFORMATION

FIELD NOTES

NO.	BY	DATE

ENGINEER'S SEAL

JAMES D. HUGHES, NEW MEXICO, REGISTERED PROFESSIONAL ENGINEER
2-21-05

NO.	DATE	REMARKS	BY

REVISIONS

DESIGN

DESIGNED BY	JDH	DATE	12/04
DRAWN BY	NHE	DATE	12/04
CHECKED BY	DMG	DATE	12/04

dmg MARK GOODWIN & ASSOCIATES, P.A.
CONSULTING ENGINEERS
P.O. BOX 90606
ALBUQUERQUE, NEW MEXICO 87199
(505) 828-2200, FAX (505) 797-9539

ALBUQUERQUE METROPOLITAN ARROYO FLOOD CONTROL AUTHORITY

TITLE: AMOLE CHANNEL (PHASE II) CROSS SECTIONS

DESIGN REVIEW COMMITTEE	CITY ENGINEER APPROVAL	LAST DESIGN UPDATE	MO./DAY/YR.	MO./DAY/YR.

CITY PROJECT NO.	ZONE MAP NO.	SHEET	OF
	N-9	8	10

F:\A04JOBS\A4009SNH\amole chan...\phase2\ph2-xsec-base1.dwg, 2/21/2005 8:20:57 AM, JCC,JCC

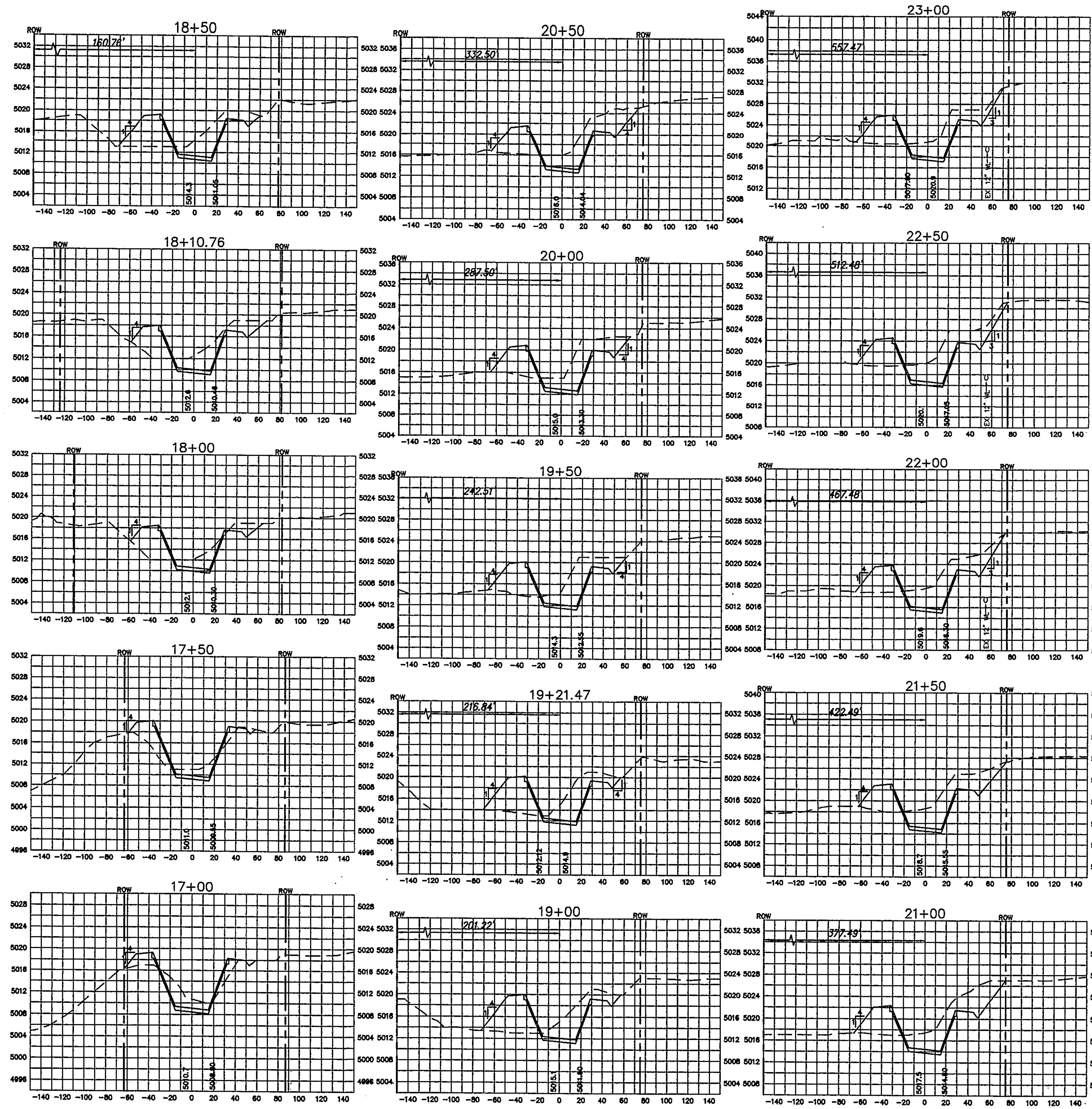

NOTES

AS BUILT INFORMATION

CONTRACTOR Salls Bros Const
WORK STAKED BY BSN DATE 2005
INSPECTOR'S ACCEPTANCE BY LArrieta DATE 2005
FIELD VERIFICATION BY BSN DATE 2005
DRAWINGS CORRECTED BY RL Larrieta DATE 10-5-05

MICRO-FILM INFORMATION

RECORDED BY DATE
NO.

BENCH MARKS

STATION "TRANS" IS LOCATED 6 MI. SOUTHWEST OF DOWNTOWN ALBUQUERQUE, IN THE R.O.W. OF A PLAINS ELECTRIC CO-OP TRANS-MISSION LINE. TO REACH STATION FROM INTERSECTION OF CENTRAL AVE. & 98TH ST. SW, GO SOUTH ON 98TH ST. 1.2 MI. TO JUNCTION WITH GIBSON BLVD. & SNOW VISTA BLVD., THEN SOUTHEAST ALONG SNOW VISTA AND CO-OP ELECTRIC TRANSMISSION LINE 0.85 MI. TO PYLON NUMBERED "52". STATION IS JUST EAST OF THIS POINT.
X = 354,899.45, Y = 1,471,822.67, ELEV. = 5118.37 NAD'27
SLD '29

SURVEY INFORMATION

FIELD NOTES

NO.	BY	DATE

ENGINEER'S SEAL

JAMES D. HUGHES — NEW MEXICO — REGISTERED PROFESSIONAL ENGINEER
2-21-05

NO.	DATE	REMARKS	BY

REVISIONS

DESIGN

DESIGNED BY	JDH	DATE	12/04
DRAWN BY	NHE	DATE	12/04
CHECKED BY	DMG	DATE	12/04

RECORD DRAWINGS WERE PREPARED FROM INFORMATION PROVIDED BY THE CONTRACTOR

RECORD DRAWING
OCT 19 2005

SCALE: HORIZ. 1" = 50'
VERT. 1" = 10'

dmg MARK GOODWIN & ASSOCIATES, P.A.
CONSULTING ENGINEERS
P.O. BOX 90606
ALBUQUERQUE, NEW MEXICO 87199
(505) 828-2200, FAX (505) 797-9539

ALBUQUERQUE METROPOLITAN
ARROYO FLOOD CONTROL AUTHORITY

TITLE: AMOLE CHANNEL
(PHASE II)
CROSS SECTIONS

DESIGN REVIEW COMMITTEE	CITY ENGINEER APPROVAL	LAST DESIGN UPDATE	MO./DAY/YR.	MO./DAY/YR.

CITY PROJECT NO.	ZONE MAP NO. N-9	SHEET 9 OF 10

A4009SNH/AMOLE CHANNEL PLANS/PH2-XSEC-BASE1 (LAYOUT2) 1-17-05 NHE

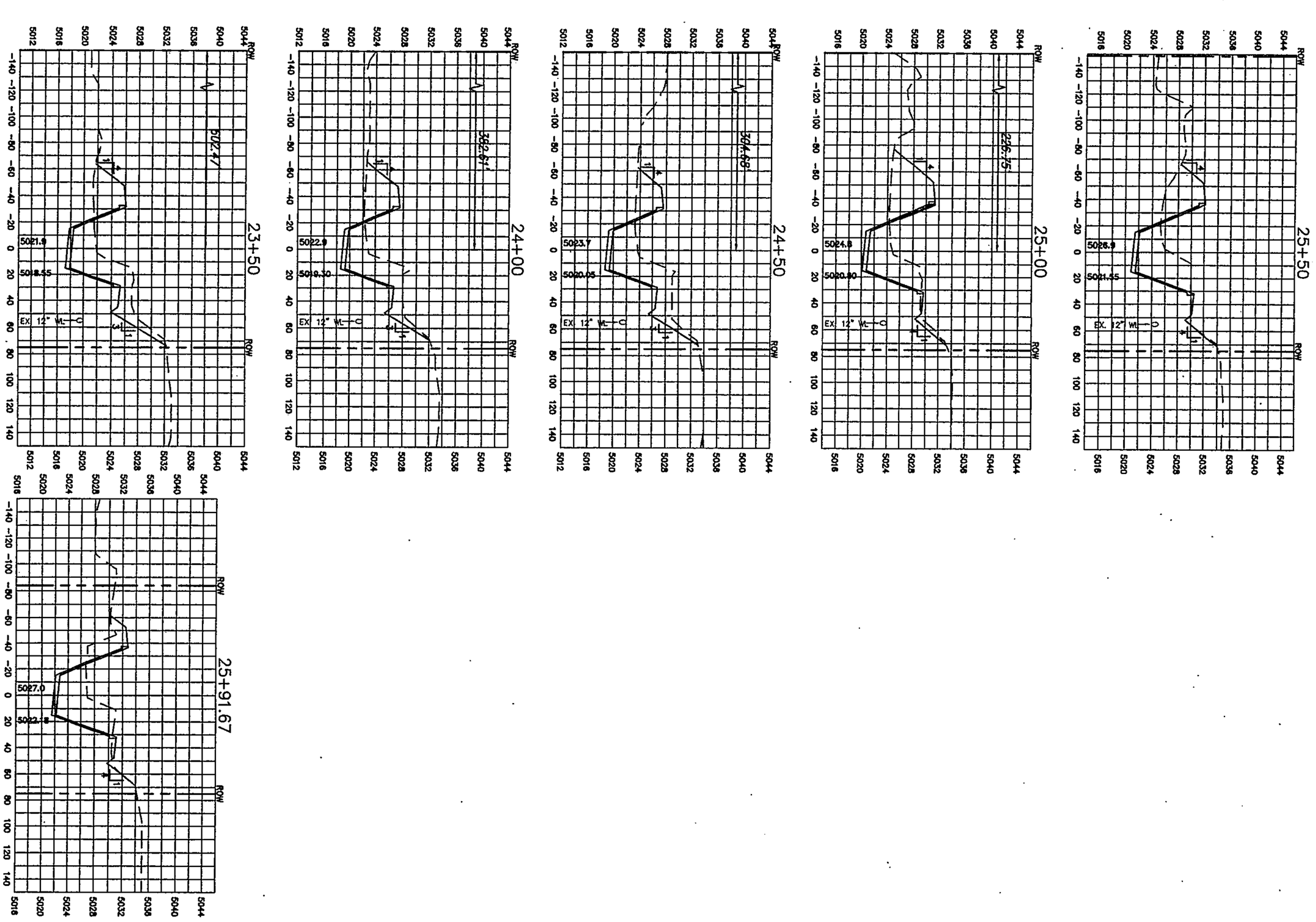

A4009SNH/AMOLE CHANNEL PLANS/PH2-XSEC-BASE1 (LAYOUT3) 1-19-05 NHE

NOTES

CITY PROJECT NO.	
ZONE MAP NO. N-9	SHEET 10 OF 10
DESIGN REVIEW COMMITTEE	
CITY ENGINEER APPROVAL	
LAST DESIGN UPDATE	MO./DAY/YR. MO./DAY/YR.

TITLE: AMOLE CHANNEL (PHASE II) CROSS SECTIONS

ALBUQUERQUE METROPOLITAN ARROYO FLOOD CONTROL AUTHORITY

dmg MARK GOODWIN & ASSOCIATES, P.A. CONSULTING ENGINEERS
P.O. BOX 90606 ALBUQUERQUE, NEW MEXICO 87199
(505) 828-2200, FAX (505) 797-9539

SCALE: HORIZ. 1" = 50' VERT. 1" = 10"

RECORD DRAWINGS WERE PREPARED FROM INFORMATION PROVIDED BY THE CONTRACTOR

RECORD DRAWING OCT 10 2005

NO.	DATE	REMARKS	BY

REVISIONS

DESIGN

DESIGNED BY	JDH	DATE	12/04
DRAWN BY	NHE	DATE	12/04
CHECKED BY	DMG	DATE	12/04

ENGINEER'S SEAL

JAMES D. HUGHES 11674 REGISTERED PROFESSIONAL ENGINEER NEW MEXICO 2-21-05

SURVEY INFORMATION

FIELD NOTES

NO.	BY	DATE

BENCH MARKS

STATION "TRANS" IS LOCATED 6 MI. SOUTHWEST OF DOWNTOWN ALBUQUERQUE, IN THE R.O.W. OF A PLAINS ELECTRIC CO-OP TRANSMISSION LINE. TO REACH STATION FROM INTERSECTION OF CENTRAL AVE. & 98TH ST. SW, GO SOUTH ON 98TH ST. 1.2 MI. TO JUNCTION WITH GIBSON BLVD. & SNOW VISTA BLVD., THEN SOUTHEAST ALONG SNOW VISTA AND CO-OP ELECTRIC TRANSMISSION LINE 0.85 MI. TO PYLON NUMBERED "52". STATION IS JUST EAST OF THIS POINT.

X = 354,899.45, Y = 1,471,822.67, ELEV. = 5118.37 NAD '27 SLD '29

AS BUILT INFORMATION

CONTRACTOR	SALLS BROS CONST.		
WORK STAKED BY	BSN	DATE	2005
INSPECTOR'S ACCEPTANCE BY	LARKIN	DATE	2005
FIELD VERIFICATION BY	BSN	DATE	2005
DRAWINGS CORRECTED BY	RL LARKIN	DATE	10-6-05

MICRO-FILM INFORMATION

RECORDED BY	DATE
NO.	

ALBUQUERQUE METROPOLITAN ARROYO FLOOD CONTROL AUTHORITY

CONSTRUCTION PLANS FOR

AMOLE CHANNEL PHASE III

ALBUQUERQUE, NEW MEXICO

CERTIFICATE OF SUBSTANTIAL COMPLIANCE ON PLANS

I, Tim J. Archibeque, NMPE No. 16678, of the firm HDR Engineering Inc., a Registered Professional Engineer in the State of New Mexico, do hereby certify, to the best of my knowledge and belief, that the infrastructure installed as part of this project has been inspected by me or by a qualified person under my direct supervision, and has been constructed in accordance with the plans and specifications approved by AMAFCA and the City Engineer and that the original design intent of the approved plans has been met, except as noted by me on the Record construction drawings. This Certification is based on site inspections by me or personnel under my direction, and survey information provided by Will Plotner JR., NMPS number 14271.

Tim Archibeque 16678 4-13-2007

Engineers Name NMPE No. Date

TIM J. ARCHIBEQUE NEW MEXICO 16678 LICENSED PROFESSIONAL ENGINEER 4-13-2007

Tim J. Archibeque

SURVEYOR'S CERTIFICATION

I, WILL PLOTNER JR, A DULY QUALIFIED, REGISTERED, PROFESSIONAL LAND SURVEYOR UNDER THE LAWS OF THE STATE OF NEW MEXICO, DO HEREBY CERTIFY THAT THE 'AS-BUILT' INFORMATION SHOWN ON THESE DRAWINGS WAS OBTAINED FROM FIELD CONSTRUCTION AND 'AS-BUILT' SURVEYS PERFORMED BY ME OR UNDER MY SUPERVISION, THAT THE 'AS-BUILT' INFORMATION SHOWN ON THESE DRAWNINGS WAS ADDED BY ME OR UNDER MY SUPERVISION, AND THAT THIS 'AS-BUILT' INFORMATION IS TRUE AND CORRECT TO THE BEST OF MY KNOWLEDGE AND BELIEF. CARTESIAN SURVEYS IS NOT RESPONSIBLE FOR ANY OF THE DESIGN CONCEPTS, CALCULATIONS, ENGINEERING, OR INTENT OF THE RECORD DRAWINGS.

Will Plotner 12/13/06

WILL PLOTNER JR, NMPS 14271

WILL PLOTNER JR. NEW MEXICO 14271 PROFESSIONAL LAND SURVEYOR

INDEX TO DRAWINGS

SHEET NO.	SHEET
1	INDEX OF SHEETS
2	MASTER PLAN
3–4	TYPICAL CHANNEL SECTIONS & DETAILS
5–6	CHANNEL PLAN & PROFILE
7–9	STRUCTURAL DETAILS
10	98TH STREET STRIPING PLAN
11–12	PAVING IMPROVEMENTS (98TH ST.)
13	PAVING IMPROVEMENTS (86TH ST. / DE ANZA DRIVE)
14–17	SANITARY SEWER IMPROVEMENT PLAN & PROFILES
18	NEW MEXICO STATE HIGHWAY & TRANSPORTATION DEPT. – GENERAL INFORMATION
19	NEW MEXICO STATE HIGHWAY & TRANSPORTATION DEPT. – TRIPLE CONCRETE BOX CULVERT DESIGN
20	NEW MEXICO STATE HIGHWAY & TRANSPORTATION DEPT. – TRIPLE CONCRETE BOX CULVERT 45° SKEW
21	NEW MEXICO STATE HIGHWAY & TRANSPORTATION DEPT. – HEADWALL
22–23	INTERSECTION PLAN
24–25	CHANNEL CROSS SECTIONS

REFERENCES:

- CLOMR REQUEST FOR AMOLE CHANNEL PHASES I, II & III FROM CONFLUENCE OF SNOW VISTA DOWN TO AMOLE DETENTION BASIN DEC. 2004 BY MARK GOODWIN & ASSOC.
- TRACTS 29, 30 & 31 AT ARROWOOD DMP OCT. 11, 2004 BY WILSON & CO.
- GIBSON BLVD. DRAINAGE PLAN NOV. 21, 2003 BY BOHANNAN–HOUSTON INC.
- CLOMR REQUEST FOR AMOLE ARROYO NOV. 2003 BY NOV. 2003 BY ISAACSON & ARFMAN
- AMOLE–HUBBEL DMP JULY 22, 1999 BY LEEDSHILL–HERKENHOFF, INC.

NOTES

1. AMAFCA FIELD ENGINEER SHALL BE NOTIFIED 48–HOURS PRIOR TO ANY WORK WITHIN THE AMAFCA R/W. TEL 884–2215 JERRY LOVATO.
2. NO WORK WILL BE PERFORMED IN THE AMAFCA R/W BETWEEN MAY 15 AND OCTOBER 15 WITHOUT WRITTEN PERMISSION FROM AMAFCA.
3. ALL SUBGRADE, BACKFILL AND EMBANKMENT SHALL BE COMPACTED TO 95% (MODIFIED PROCTOR) WITHIN AMAFCA R/W. TESTING REPORTS SHALL BE PROVIDED TO AMAFCA FIELD ENGINEER.
4. AMAFCA FIELD ENGINEER WILL BE NOTIFIED 48–HOURS PRIOR TO FINAL INSPECTION OF ANY FACILITIES WITHIN THE AMAFCA R/W.
5. ALL DISTURBED GROUND AREAS SHALL BE REVEGETATED IN ACCORDANCE WITH CITY OF ALBUQUERQUE STANDARD SPECIFICATIONS FOR PUBLIC WORKS CONSTRUCTION, SECTION 1012 NATIVE GRASS SEEDING, AS CURRENTLY UPDATED.

APPROVED FOR CONSTRUCTION

John P. Kelly	1-6-06
JOHN P. KELLY, P.E. EXECUTIVE ENGINEER, A.M.A.F.C.A.	DATE
Roger O. Robinson	1-6-06
ROGER O. ROBINSON A.B.C.W.U.A.	DATE
John R. Castillo	1/6/06
JOHN R. CASTILLO, P.E. C.O.A. D.M.D.	DATE

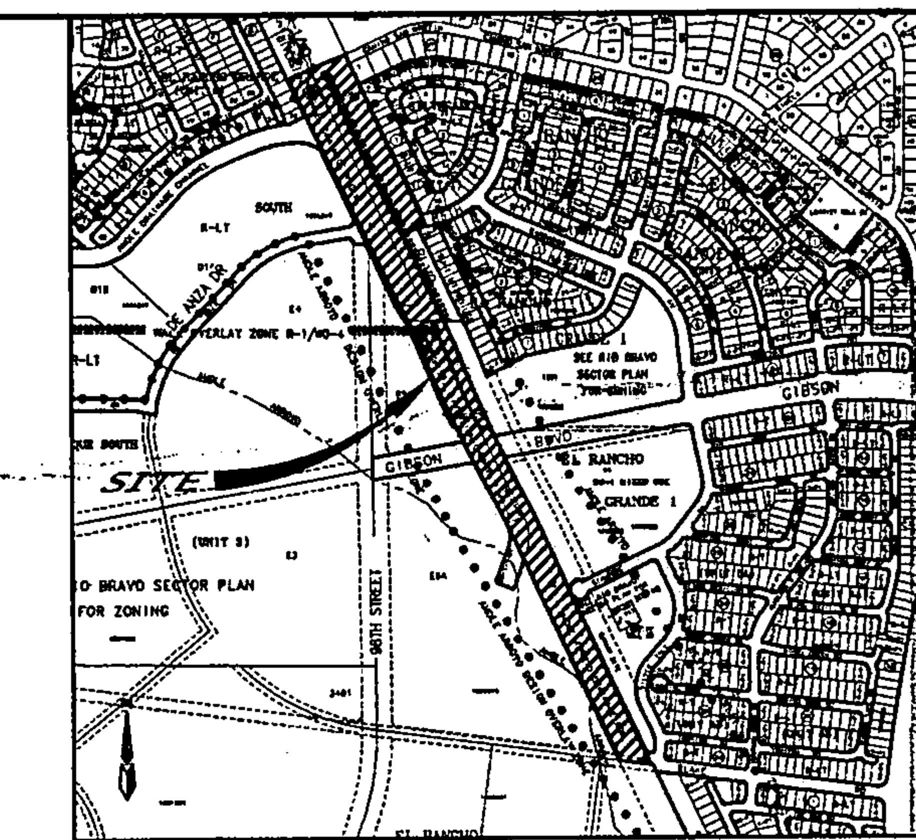

VICINITY MAP ZONE ATLAS N–9–Z

SCALE: NONE

GENERAL NOTES

NOTICE TO CONTRACTORS

1. AN EXCAVATION/CONSTRUCTION PERMIT WILL BE REQUIRED BEFORE BEGINNING ANY WORK WITHIN THE CITY RIGHT–OF–WAY.
2. ALL WORK DETAILED ON THESE PLANS TO BE PERFORMED UNDER CONTRACT SHALL, EXCEPT AS OTHERWISE STATED OR PROVIDED FOR HEREON, BE CONSTRUCTED IN ACCORDANCE WITH THE THE NEW MEXICO STATE HIGHWAY AND TRANSPORTATION DEPARTMENT STANDARD SPECIFICATIONS FOR HIGHWAY AND BRIDGE CONSTRUCTION 1994 EDITION AND ALL WORK WITHIN CITY OF ALBUQUERQUE PUBLIC RIGHT OF WAY, EASEMENT AND PROPERTY SHALL BE PERFORMED IN ACCORDANCE WITH CITY OF ALBUQUERQUE STANDARDS AND SPECIFICATIONS FOR PUBLIC WORKS CONSTRUCTION, 1986 – UPDATE #7.
3. TWO WORKING DAYS PRIOR TO ANY EXCAVATION, THE CONTRACTOR MUST CONTACT NEW MEXICO ONE CALL SYSTEM (260–1990) FOR LOCATION OF EXISTING UTILITIES.
4. PRIOR TO CONSTRUCTION, THE CONTRACTOR SHALL EXCAVATE AND VERIFY THE HORIZONTAL AND VERTICAL LOCATIONS OF ALL OBSTRUCTIONS. SHOULD A CONFLICT EXIST, THE CONTRACTOR SHALL NOTIFY THE ENGINEER IMMEDIATELY SO THAT THE CONFLICT CAN BE RESOLVED WITH A MINIMUM AMOUNT OF DELAY.
5. FIVE (5) WORKING DAYS PRIOR TO BEGINNING OF CONSTRUCTION, THE CONTRACTOR SHALL SUBMIT TO CONSTRUCTION COORDINATION DIVISION A DETAILED CONSTRUCTION SCHEDULE. TWO (2) WORKING DAYS PRIOR TO THE START OF CONSTRUCTION, THE CONTRACTOR SHALL OBTAIN A BARRICADING PERMIT FROM THE CONSTRUCTION COORDINATION DIVISION. CONTRACTOR SHALL NOTIFY THE CONSTRUCTION COORDINATION ENGINEER (924–3400) PRIOR TO OCCUPYING AN INTERSECTION. REFER TO SECTION 19 OF THE GENERAL CONDITIONS OF THE STANDARD SPECIFICATIONS.
6. ALL WORK AFFECTING ARTERIAL ROADWAYS REQUIRES TWENTY–FOUR HOUR CONSTRUCTION,
7. ALL STREET STRIPING ALTERED OR DESTROYED SHALL BE REPLACED WITH PLASTIC REFLECTORIZED PAVEMENT MARKING BY CONTRACTOR TO THE SAME LOCATION AS WAS EXISTING, OR AS INDICATED BY THIS PLAN SET.
8. CONTRACTOR SHALL NOTIFY THE ENGINEER NOT LESS THAN SEVEN (7) DAYS PRIOR TO STARTING WORK IN ORDER THAT THE CITY SURVEYOR MAY TAKE NECESSARY MEASURES TO INSURE THE PRESERVATION OF SURVEY MONUMENTS. CONTRACTOR SHALL NOT DISTURB PERMANENT SURVEY MONUMENTS WITHOUT THE CONSENT OF THE CITY SURVEYOR AND SHALL NOTIFY THE CITY SURVEYOR AND BEAR THE EXPENSE OF REPLACING ANY THAT MAY BE DISTURBED WITHOUT PERMISSION. REPLACEMENT SHALL BE DONE ONLY BY THE CITY SURVEYOR. WHEN A CHANGE IS MADE IN THE FINISHED ELEVATIONS OF THE PAVEMENT OF ANY ROADWAY IN WHICH A PERMANENT SURVEY MONUMENT IS LOCATED, CONTRACTOR SHALL, AT HIS OWN EXPENSE, ADJUST THE MONUMENT TO COVER THE NEW GRADE UNLESS OTHERWISE SPECIFIED. REFER TO SECTION 4.4 OF THE GENERAL CONDITIONS OF THE STANDARD SPECIFICATIONS.

   CONTRACTOR SHALL RECORD DATA ON ALL UTILITY LINES AND ACCESSORIES AS REQUIRED BY THE CITY OF ALBUQUERQUE FOR THE PREPARATION OF "AS CONSTRUCTED" DRAWINGS. CONTRACTOR SHALL NOT COVER UTILITY LINES AND ACCESSORIES UNTIL ALL DATA HAVE BEEN RECORDED.

10. CONTRACTOR SHALL MAINTAIN A GRAFFITI–FREE WORK SITE. CONTRACTOR SHALL PROMPTLY REMOVE ANY GRAFFITI FROM ALL EQUIPMENT, WHETHER PERMANENT OR TEMPORARY.
11. CONTRACTOR SHALL COORDINATE WITH THE CITY OF ALBUQUERQUE WATER SYSTEMS DIVISION (857–8200) SEVEN (7) WORKING DAYS IN ADVANCE OF ANY WORK THAT MAY AFFECT EXISTING PUBLIC WATER OR SEWER UTILITIES. EXISTING VALVES TO BE OPERATED BY CITY PERSONNEL ONLY. CONTRACTOR SHALL CONTACT THE WATER SYSTEMS DIVISION SEVEN (7) WORKING DAYS PRIOR TO NEEDING VALVES TURNED ON OR OFF.
12. FOR STORM DRAIN CONSTRUCTION, RCP JOINTS SHALL NOT BE GROUTED PRIOR TO FINAL INSPECTION. FINAL INSPECTION WILL DETERMINE JOINTS TO BE GROUTED FOR FINAL ACCEPTANCE OF THE CONSTRUCTION.

THE FOLLOWING NOTES ALSO APPLY WHEN CHECKED

[N] ALL STORM DRAINAGE FACILITIES SHALL BE COMPLETED PRIOR TO FINAL ACCEPTANCE.

dmg D. MARK GOODWIN & ASSOCIATES, P.A. CONSULTING ENGINEERS
P. O. BOX 90606
ALBUQUERQUE, NEW MEXICO 87199
(505) 828–2200, FAX (505) 797–9539

REV.	SHEETS	CITY ENGINEER	DATE	USER DEPARTMENT	DATE	USER DEPARTMENT	DATE
1	2,5,6,14–17			[signature]	2-22-06		

CAUTION:
NOTE THAT ALL EXISTING UTILITIES MAY NOT BE SHOWN. ALL EXISTING SERVICE CONNECTIONS ARE NOT SHOWN. ANY EXISTING UTILITIES THAT ARE SHOWN ARE APPROXIMATE LOCATION ONLY. IT SHALL BE THE SOLE RESPONSIBILITY OF THE CONTRACTOR TO CONTACT ALL THE UTILITY OWNERS AND TO CONDUCT ALL NECESSARY FIELD INVESTIGATIONS PRIOR TO ANY EXCAVATIONS TO DETERMINE THE ACTUAL LOCATION OF UTILITIES AND OTHER IMPROVEMENTS.

DRB NO. 1003571

ENGINEERS STAMP & SIGNATURE: JAMES D. HUGHES NEW MEXICO 11674 REGISTERED PROFESSIONAL ENGINEER 12-03-05 12-13-05

APPROVALS	ENGINEER	DATE
DRC CHAIRMAN	[signature]	1-9-06
TRANSPORTATION	Roland Penttila	12-14-05
WATER/WASTEWATER	[signature]	12-13-05
HYDROLOGY	John P. Curtin	12-6-05
CIP		
CONSTR. MNGMT.		
CONSTR. COORD.	[signature]	1-9-06

CITY PROJECT NO. 756291

APPROVED FOR CONSTRUCTION

[signature] 1-09-06

CITY ENGINEER DATE

SHEET 1 OF 25

RECORD DRAWINGS
HDR ENGINEERING INC.
Tim Anderle 16678 4-13-2007
Engineer Name NMPE No. Date

RECORD DRAWINGS

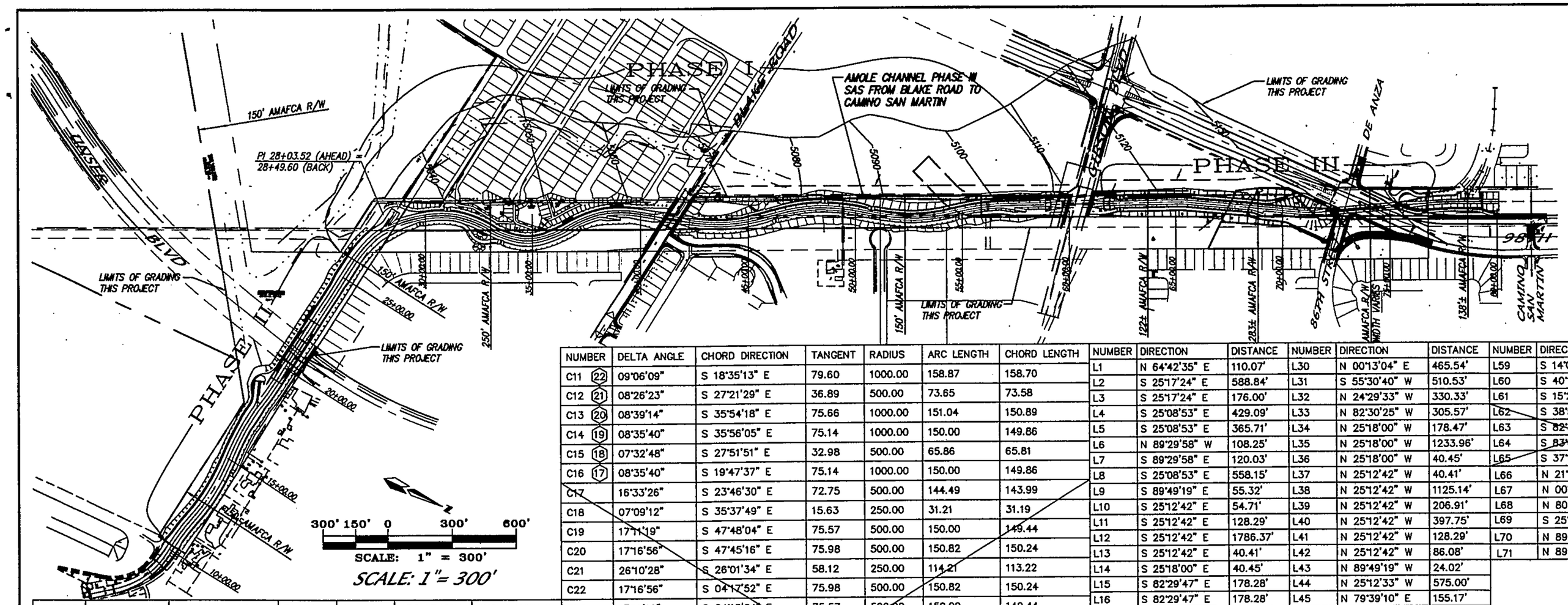

NUMBER	DELTA ANGLE	CHORD DIRECTION	TANGENT	RADIUS	ARC LENGTH	CHORD LENGTH
C1	90°00'01"	S 70°17'25" E	25.00	25.00	39.27	35.36
C2	115°38'55"	S 32°40'35" W	39.74	25.00	50.46	42.32
C3	64°21'05"	S 57°19'25" E	15.73	25.00	28.08	26.63
C4	26°01'10"	N 12°16'49" W	170.51	738.00	335.14	332.27
C5 (28)	10°11'12"	S 24°50'56" E	44.57	500.00	88.90	88.78
C6 (27)	06°32'27"	S 23°01'33" E	28.57	500.00	57.08	57.05
C7 (26)	11°59'07"	S 32°17'20" E	104.97	1000.00	209.18	208.80
C8 (25)	08°35'40"	S 33°59'04" E	75.14	1000.00	150.00	149.86
C9 (24)	07°03'26"	S 26°09'31" E	30.83	500.00	61.59	61.55
C10 (23)	08°35'40"	S 18°19'58" E	75.14	1000.00	150.00	149.86
C11 (22)	09°06'09"	S 18°35'13" E	79.60	1000.00	158.87	158.70
C12 (21)	08°26'23"	S 27°21'29" E	36.89	500.00	73.65	73.58
C13 (20)	08°39'14"	S 35°54'18" E	75.66	1000.00	151.04	150.89
C14 (19)	08°35'40"	S 35°56'05" E	75.14	1000.00	150.00	149.86
C15 (18)	07°32'48"	S 27°51'51" E	32.98	500.00	65.86	65.81
C16 (17)	08°35'40"	S 19°47'37" E	75.14	1000.00	150.00	149.86
C17	16°33'26"	S 23°46'30" E	72.75	500.00	144.49	143.99
C18	07°09'12"	S 35°37'49" E	15.63	250.00	31.21	31.19
C19	17°11'19"	S 47°48'04" E	75.57	500.00	150.00	149.44
C20	17°16'56"	S 47°45'16" E	75.98	500.00	150.82	150.24
C21	26°10'28"	S 26°01'34" E	58.12	250.00	114.21	113.22
C22	17°16'56"	S 04°17'52" E	75.98	500.00	150.82	150.24
C23	17°11'19"	S 04°15'04" E	75.57	500.00	150.00	149.44
C24	09°10'02"	S 17°25'45" E	20.04	250.00	40.00	39.96
C25	17°11'19"	S 30°36'26" E	75.57	500.00	150.00	149.44
C26	17°11'19"	S 47°33'23" E	75.57	500.00	150.00	149.44
C27	09°10'02"	S 60°44'04" E	20.04	250.00	40.00	39.96
C28	17°29'37"	S 74°03'54" E	76.93	500.00	152.66	152.07
C29	06°20'36"	S 79°20'00" E	55.41	1000.00	110.71	110.65
C30	17°08'20"	S 84°43'52" E	150.69	1000.00	299.13	298.01
C31	19°31'19"	S 83°32'22" E	172.03	1000.00	340.72	339.07
C32	08°32'26"	S 78°02'56" E	74.67	1000.00	149.06	148.92
C33	46°40'31"	S 59°42'36" E	170.80	395.89	322.50	313.66
C34 (28)	04°39'08"	S 27°36'58" E	20.31	500.00	40.60	40.59

NUMBER	DIRECTION	DISTANCE	NUMBER	DIRECTION	DISTANCE	NUMBER	DIRECTION	DISTANCE
L1	N 64°42'35" E	110.07'	L30	N 00°13'04" E	465.54'	L59	S 14°02'08" E	79.91'
L2	S 25°17'24" E	588.84'	L31	S 55°30'40" W	510.53'	L60	S 40°13'54" E	59.35'
L3	S 25°17'24" E	176.00'	L32	N 24°29'33" W	330.33'	L61	S 15°29'47" E	231.26'
L4	S 25°08'53" E	429.09'	L33	N 82°30'25" W	305.57'	L62	S 38°57'44" E	25.00'
L5	S 25°08'53" E	365.71'	L34	N 25°18'00" W	178.47'	L63	S 82°30'18" E	670.20'
L6	N 89°29'58" W	108.25'	L35	N 25°18'00" W	1233.96'	L64	S 83°02'52" E	31.82'
L7	S 89°29'58" E	120.03'	L36	N 25°18'00" W	40.45'	L65	S 37°12'50" E	115.85'
L8	S 25°08'53" E	558.15'	L37	N 25°12'42" W	40.41'	L66	N 21°11'15" W	327.74
L9	S 89°49'19" E	55.32'	L38	N 25°12'42" W	1125.14'	L67	N 00°52'27" W	185.12'
L10	S 25°12'42" E	54.71'	L39	N 25°12'42" W	206.91'	L68	N 80°43'46" E	26.43'
L11	S 25°12'42" E	128.29'	L40	N 25°12'42" W	397.75'	L69	S 25°08'53" E	548.09'
L12	S 25°12'42" E	1786.37'	L41	N 25°12'42" W	128.29'	L70	N 89°29'58" W	137.73'
L13	S 25°12'42" E	40.41'	L42	N 25°12'42" W	86.08'	L71	N 89°29'58" W	164.42'
L14	S 25°18'00" E	40.45'	L43	N 89°49'19" W	24.02'			
L15	S 82°29'47" E	178.28'	L44	N 25°12'33" W	575.00'			
L16	S 82°29'47" E	178.28'	L45	N 79°39'10" E	155.17'			
L17	S 82°29'47" E	178.46'	L46	N 79°39'10" E	155.17'			
L18	S 82°29'47" E	118.97'	L47	N 31°24'01" W	101.28'			
L19	S 25°18'00" E	1233.91'	L48	N 25°16'00" W	130.18'			
L20	S 82°30'18" E	496.28'	L49	N 00°47'58" W	228.19'			
L21	S 82°28'03" E	248.65'	L50	N 60°03'28" E	39.74'			
L22	S 82°29'02" E	825.90'	L51	S 00°43'46" W	137.49'			
L23	S 81°47'06" E	247.35'	L52	N 25°16'00" W	368.67'			
L24	S 82°29'16" E	374.79'	L53	N 25°16'00" W	1061.14'			
L25	S 89°23'07" W	250.88'	L54	S 25°17'24" E	155.04'			
L26	S 00°26'42" W	199.75'	L55	S 29°56'32" E	563.85'			
L27	S 00°24'08" W	376.01'	L56	S 19°45'19" E	216.32'			
L28	N 88°39'11" W	200.26'	L57	S 26°17'47" E	810.89'			
L29	S 89°58'59" W	705.91'	L58	S 38°16'54" E	40.40'			

ACS MONUMENT
"TRANS"
Y=1471822.67
X=354899.45
G-G=0.99967921
Δα=-00°16'42"
CENTRAL ZONE
(NAD 1927/SLD 1929)
ELEVATION=5118.37

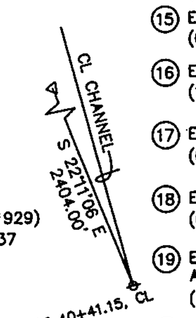

DETAIL "A"
N.T.S.

EASEMENTS

1. EXISTING 10' PNM & MST&T EASEMENT (DOCUMENT NO. 80-23229) (4-18-80, Bk. Misc. 766, Pg. 745)
2. EXISTING C.O.A. BLANKET DRAINAGE EASEMENT ACROSS TRACT E (11-28-94, 94C-393)
3. EXISTING 124' PUBLIC ROADWAY, WATERLINE AND SANITARY SEWER EASEMENT (06-05-02, 02C-197)
4. EXISTING 156' PUBLIC ROADWAY, WATERLINE AND SANITARY SEWER EASEMENT (06-05-02, 02C-197)
5. EXISTING 34' PUBLIC ROADWAY, UTILITY & DRAINAGE EASEMENT (05-21-02, 02C-184)
6. EXISTING 34' PUBLIC ROADWAY, UTILITY & DRAINAGE EASEMENT (01-16-01, 2001C-20)
7. EXISTING 60' PUBLIC ROADWAY, UTILITY & DRAINAGE EASEMENT (05-21-02, 02C-184) (TO BE VACATED BY EL RANCHO GRANDE, UNIT 9B PLAT)
8. 60' BLAKE ROAD S.W., NO DEDICATION DOCUMENT AVAILABLE
9. 124' PUBLIC ROADWAY, WATERLINE AND SANITARY SEWER EASEMENT (08-15-03, 03C-248)
10. 60' PUBLIC ROADWAY, UTILITY & DRAINAGE EASEMENT (03-21-03, 03C-73)
11. EXISTING EASEMENTS TO ACCOMMODATE THE EXISTING 100 YEAR STORM FLOWS FOR AMAFCA DRAINAGE CONTROL. SUCH EASEMENTS ARE TO RUN WITH THE LAND BUT MAY BE MODIFIED, REMOVED, OR REPLACED AS NECESSARY AND MUTUALLY AGREED TO BY AMAFCA AND OWNER(S) PENDING FUTURE PLATTING SUBMITTALS WHICH CONFORM TO A MORE COMPLETE OR IMPROVED ROUTING OF THE DRAINAGE FACILITIES. (05-06-86, C30-91) (TO BE VACATED BY EL RANCHO GRANDE, UNIT 9B PLAT)
12. EXISTING 100' PNM EASEMENT (04-12-56, BK. D348, PG. 43)
13. EXISTING 150' AMAFCA AMOLE ARROYO DRAINAGE EASEMENT (05-21-02, 02C-184) (TO BE VACATED BY EL RANCHO GRANDE, UNIT 9B PLAT)
14. EXISTING 156' PUBLIC INGRESS/EGRESS, WATER AND SANITARY SEWER EASEMENT (04-04-02, BK. A34, PG. 4273)
15. EXISTING 10' PNM & MST&T EASEMENT (01-17-86, BK. MISC. 312A, PGS. 840 & 850)
16. EXISTING 50' ACCESS & UNDERGROUND WATERLINE EASEMENT (10-25-85, BK. MISC. 284A, PG. 668)
17. EXISTING 10' PNM & MST&T EASEMENT (01-17-86, BK. MISC. 81A, PGS. 881 & 882)
18. EXISTING 10' PNM OVERHEAD LINE EASEMENT (05-06-86, C30-91)
19. EASEMENT FROM CITY OF ALBUQUERQUE PARKS AND RECREATION TO AMAFCA ( )
20. TEMPORARY AMAFCA SLOPE EASEMENT FUTURE CONSTRUCTION OF SLOPES PER PHASE 3 PLANS
21. AMAFCA SLOPE EASEMENT FUTURE CONSTRUCTION OF SLOPES PER PHASE 3 PLANS (10-07-05, BK 184, PG 9135)
22. EXISTING AMAFCA ACCESS EASEMENT (04-12-04, A75-7181)

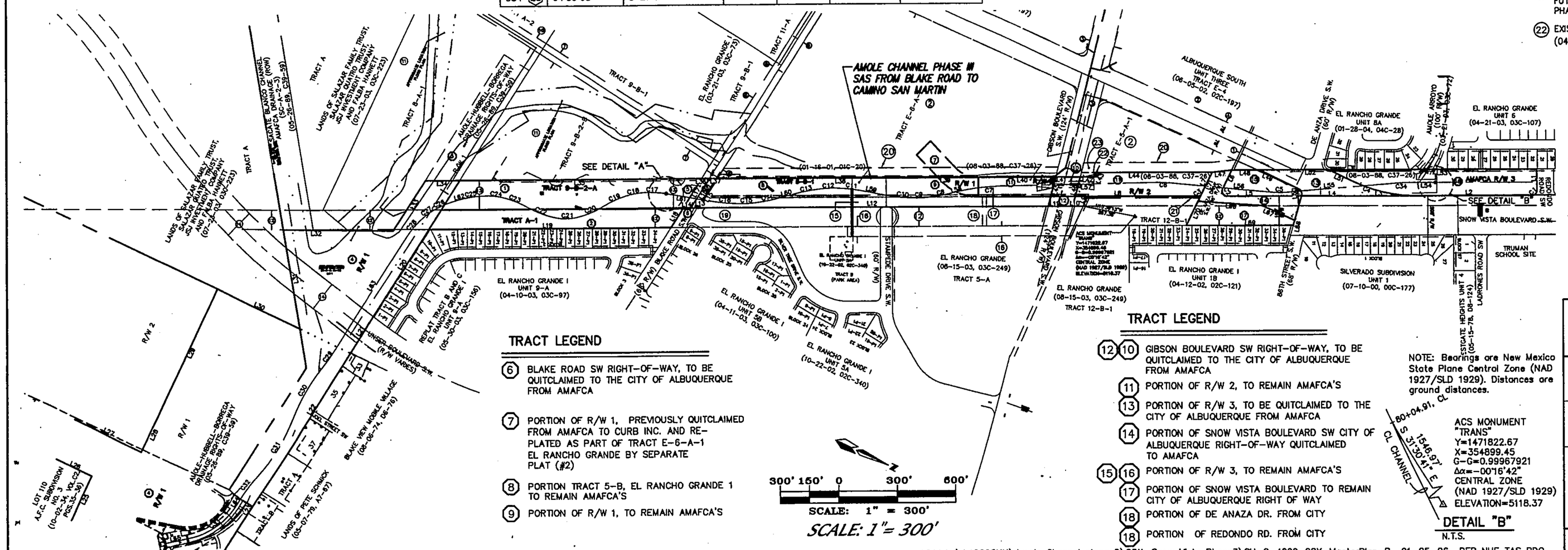

TRACT LEGEND

6. BLAKE ROAD SW RIGHT-OF-WAY, TO BE QUITCLAIMED TO THE CITY OF ALBUQUERQUE FROM AMAFCA
7. PORTION OF R/W 1, PREVIOUSLY QUITCLAIMED FROM AMAFCA TO CURB INC. AND RE-PLATED AS PART OF TRACT E-6-A-1 EL RANCHO GRANDE BY SEPARATE PLAT (#2)
8. PORTION TRACT 5-B, EL RANCHO GRANDE 1 TO REMAIN AMAFCA'S
9. PORTION OF R/W 1, TO REMAIN AMAFCA'S

TRACT LEGEND

(12) (10) GIBSON BOULEVARD SW RIGHT-OF-WAY, TO BE QUITCLAIMED TO THE CITY OF ALBUQUERQUE FROM AMAFCA
(11) PORTION OF R/W 2, TO REMAIN AMAFCA'S
(13) PORTION OF R/W 3, TO BE QUITCLAIMED TO THE CITY OF ALBUQUERQUE FROM AMAFCA
(14) PORTION OF SNOW VISTA BOULEVARD SW CITY OF ALBUQUERQUE RIGHT-OF-WAY QUITCLAIMED TO AMAFCA
(15) (16) PORTION OF R/W 3, TO REMAIN AMAFCA'S
(17) PORTION OF SNOW VISTA BOULEVARD TO REMAIN CITY OF ALBUQUERQUE RIGHT OF WAY
(18) PORTION OF DE ANAZA DR. FROM CITY
(18) PORTION OF REDONDO RD. FROM CITY

NOTE: Bearings are New Mexico State Plane Central Zone (NAD 1927/SLD 1929). Distances are ground distances.

ACS MONUMENT
"TRANS"
Y=1471822.67
X=354899.45
G-G=0.99967921
Δα=-00°16'42"
CENTRAL ZONE
(NAD 1927/SLD 1929)
ELEVATION=5118.37

DETAIL "B"
N.T.S.

TRACT LEGEND

1. TRACT 9-B-2-A DEDICATED TO AMAFCA ON EL RANCHO GRANDE I, UNIT 9B PLAT (6-22-05, 2005C-224)
2. TRACT A-1 DEDICATED TO AMAFCA ON EL RANCHO GRANDE I, UNIT 9B PLAT
3. PORTION OF R/W 1, QUITCLAIMED FROM AMAFCA TO CURB INC. AND RE-PLATTED BY SEPARATE PLAT. (#1)
4. PORTION OF R/W 1, TO REMAIN AMAFCA'S
5. BLAKE ROAD SW RIGHT-OF-WAY, TO BE DEDICATED TO THE CITY OF ALBUQUERQUE BY EL RANCHO GRANDE I, UNIT 9B PLAT.

AS BUILT INFORMATION
CONTRACTOR
WORK STAKED BY Cartesian Surveys Inc. DATE 2006
INSPECTOR'S ACCEPTANCE BY DATE
FIELD VERIFICATION BY Cartesian Surveys Inc. DATE 2006
DRAWINGS CORRECTED BY DATE
MICRO-FILM INFORMATION
RECORDED BY DATE
NO.

BENCH MARKS
STATION "TRANS" IS LOCATED 6 MI. SOUTHWEST OF DOWNTOWN ALBUQUERQUE, IN THE R.O.W. OF A PLAINS ELECTRIC CO-OP. TRANSMISSION LINE. TO REACH STATION FROM INTERSECTION OF CENTRAL AVE. & 98TH ST. SW, GO SOUTH ON 98TH ST. 1.2 MI. TO JUNCTION WITH GIBSON BLVD. & SNOW VISTA BLVD., THEN SOUTHEAST ALONG SNOW VISTA AND CO-OP ELECTRIC TRANSMISSION LINE 0.85 MI. TO PYLON NUMBERED "52". STATION IS JUST EAST OF THIS POINT.
X = 354,899.45, Y = 1,471,822.67, ELEV. = 5118.37 (NAVD29).
7-#8" LOCATED ON SW COR. OF 98th & SUGE. NCGD 29 EL. = 5147.87

SURVEY INFORMATION
FIELD NOTES

NO.	BY	DATE

ENGINEER'S SEAL
JAMES D. LOVATO NEW MEXICO LICENSED PROFESSIONAL ENGINEER 9857
1-25-06

NO.	DATE	REMARKS	BY

REVISIONS

		DATE
DESIGNED BY	JDH	05/04
DRAWN BY	DER	05/04
CHECKED BY	DMG	05/04

dmg MARK GOODWIN & ASSOCIATES, P.A.
CONSULTING ENGINEERS
P.O. BOX 90606
ALBUQUERQUE, NEW MEXICO 87199
(505) 828-2200, FAX (505) 797-9539

ALBUQUERQUE METROPOLITAN ARROYO FLOOD CONTROL AUTHORITY

TITLE: *AMOLE CHANNEL - PHASE III MASTER PLAN*

DESIGN REVIEW COMMITTEE	CITY ENGINEER APPROVAL	LAST DESIGN UPDATE	MO./DAY/YR.	MO./DAY/YR.
FEB 2 9 2006	FEB 2 2 2006 CITY ENGINEER			

CITY PROJECT NO.	ZONE MAP NO.	SHEET	OF
756291	N-9	2	25

A04Jobs\A4009SNH\Amole Channel plans 2\98th Snow Vista Phase3\SH-2-4009-98X-MasterPlan-R 01-25-06 DER NHE TAS RDQ

HDR ENGINEERING INC. RECORD DRAWINGS
Engineers Name: Tim Aneckl — NMPE No. 16670 — Date 4-13-2007

NOTES

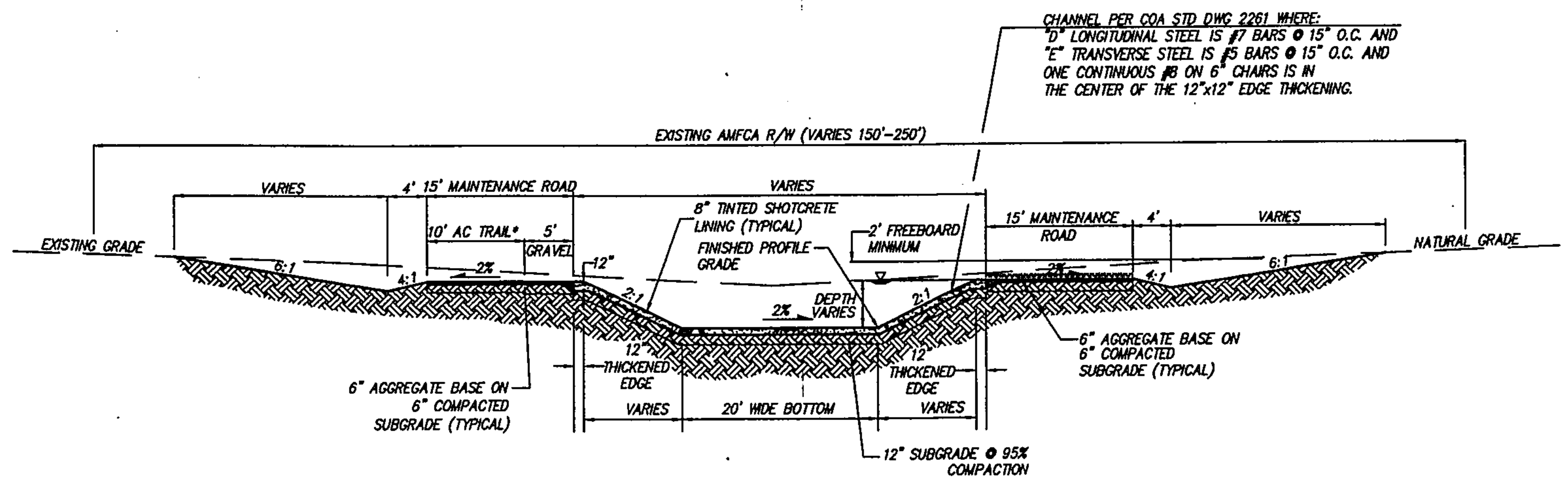

* 2" AC TRAIL THIS PROJECT INCLUDES FROM STA 42+55 TO STA 83+15 SEE SEPERATE PROJECT FOR ADDITIONAL TRAIL CONSTRUCTION.

CHANNEL SECTION DETAIL A
N.T.S. STATION 62+28 TO 80+05

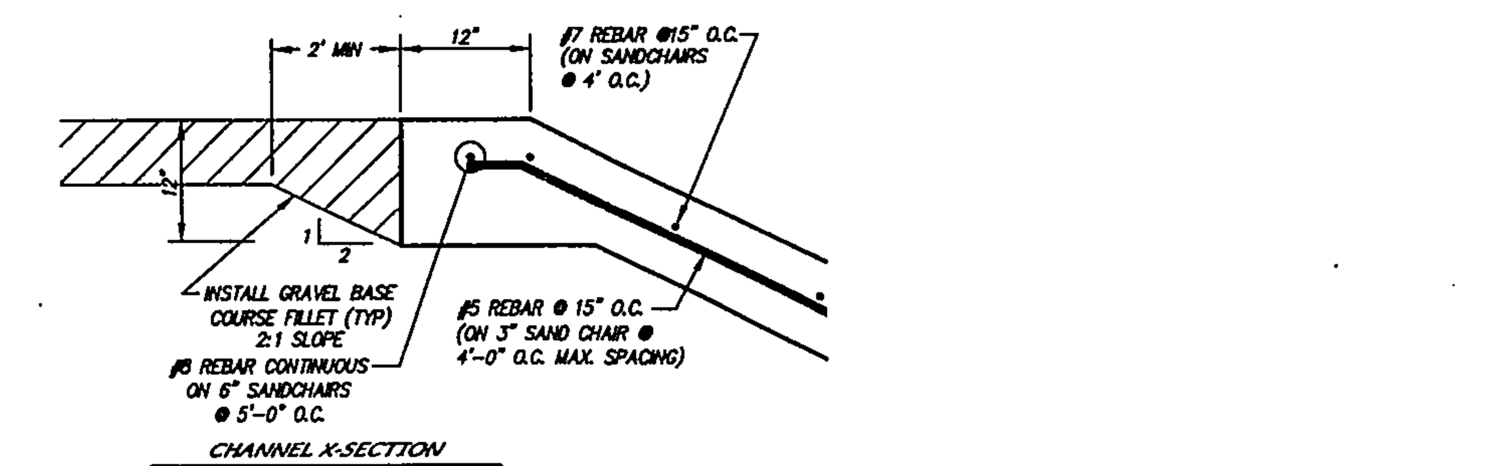

CHANNEL X-SECTION
N.T.S.

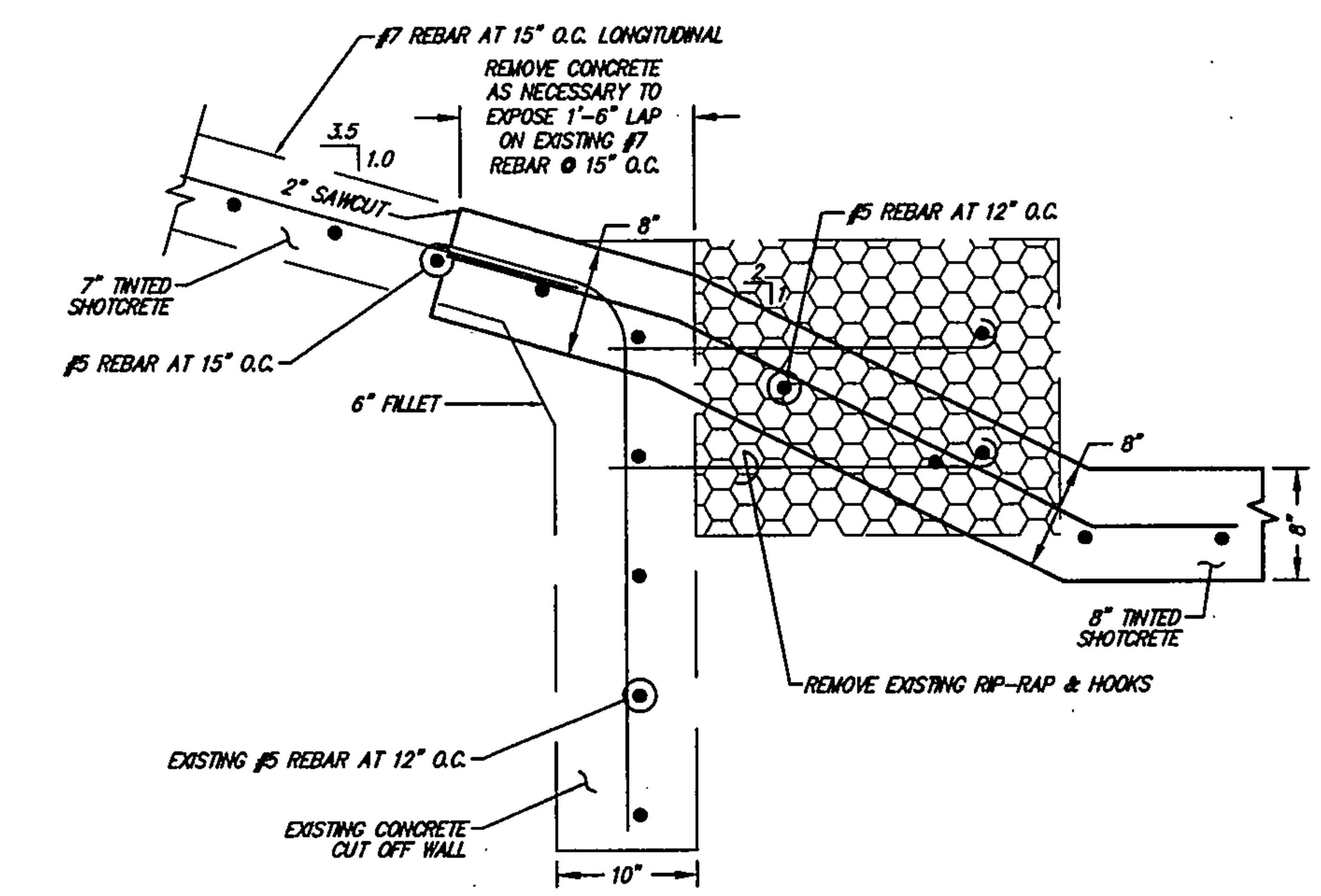

SECTION J-J
N.T.S. STA 79+10 TO END

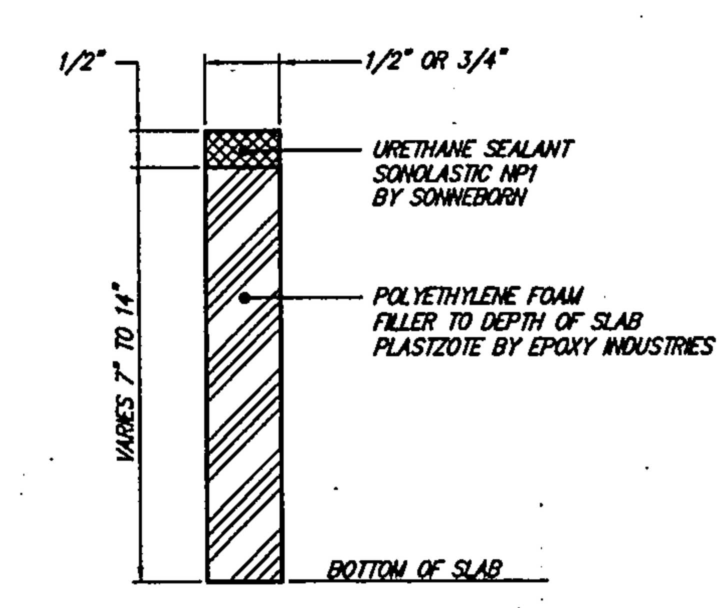

EXPANSION JOINT DETAIL
N.T.S.

AS BUILT INFORMATION	
CONTRACTOR	
WORK STAKED BY Cartesian Surveys Inc.	DATE 2006
INSPECTOR'S ACCEPTANCE BY	DATE
FIELD VERIFICATION BY Cartesian Surveys Inc.	DATE 2006
DRAWINGS CORRECTED BY	DATE
MICRO-FILM INFORMATION	
RECORDED BY	DATE
NO.	

BENCH MARKS

STATION "TRANS" IS LOCATED 6 MI. SOUTHWEST OF DOWNTOWN ALBUQUERQUE, IN THE R.O.W. OF A PLAINS ELECTRIC CO-OP TRANSMISSION LINE. TO REACH STATION FROM INTERSECTION OF CENTRAL AVE. & 98TH ST. SW, GO SOUTH ON 98TH ST. 1.2 MI. TO JUNCTION WITH GIBSON BLVD. & SNOW VISTA BLVD., THEN SOUTHEAST ALONG SNOW VISTA AND CO-OP ELECTRIC TRANSMISSION LINE 0.85 MI. TO PYLON NUMBERED "52". STATION IS JUST EAST OF THIS POINT. X = 354,899.45, Y = 1,471,822.67, ELEV. = 5118.37 (NAVD29)

SURVEY INFORMATION		
FIELD NOTES		
NO.	BY	DATE

ENGINEER'S SEAL — JAMES D. HUGHES, NEW MEXICO, REGISTERED PROFESSIONAL ENGINEER — 12-13-05

NO.	DATE	REVISIONS REMARKS	BY

DESIGN			
DESIGNED BY	JDH	DATE	05/04
DRAWN BY	DER	DATE	05/04
CHECKED BY	DMG	DATE	05/04

dmg MARK GOODWIN & ASSOCIATES, P.A.
CONSULTING ENGINEERS
P.O. BOX 90606
ALBUQUERQUE, NEW MEXICO 87199
(505) 828-2200, FAX (505) 797-9539

CITY OF ALBUQUERQUE
PUBLIC WORKS DEPARTMENT

TITLE: AMOLE CHANNEL - PHASE III
TYPICAL SECTIONS &
TEMPORARY TRANSITION DETAIL

DESIGN REVIEW COMMITTEE	CITY ENGINEER APPROVAL	LAST DESIGN UPDATE	MO./DAY/YR.	MO./DAY/YR.
JAN - 9 2006 DESIGN REVIEW COMMITTEE	CITY ENGINEER			

CITY PROJECT NO.	ZONE MAP NO.	SHEET	OF
756291	N-9	3	25

A04Jobs\A4009SNH\Amole Channel plans 2\98th Snow Vista Phase3\SH-3-4009-98X-dtl 11-18-05 DER NHE TAS

RECORD DRAWINGS
HDR ENGINEERING INC.
Tim [signature] 16678 4-18-2007
Engineers Name NMPE No. Date

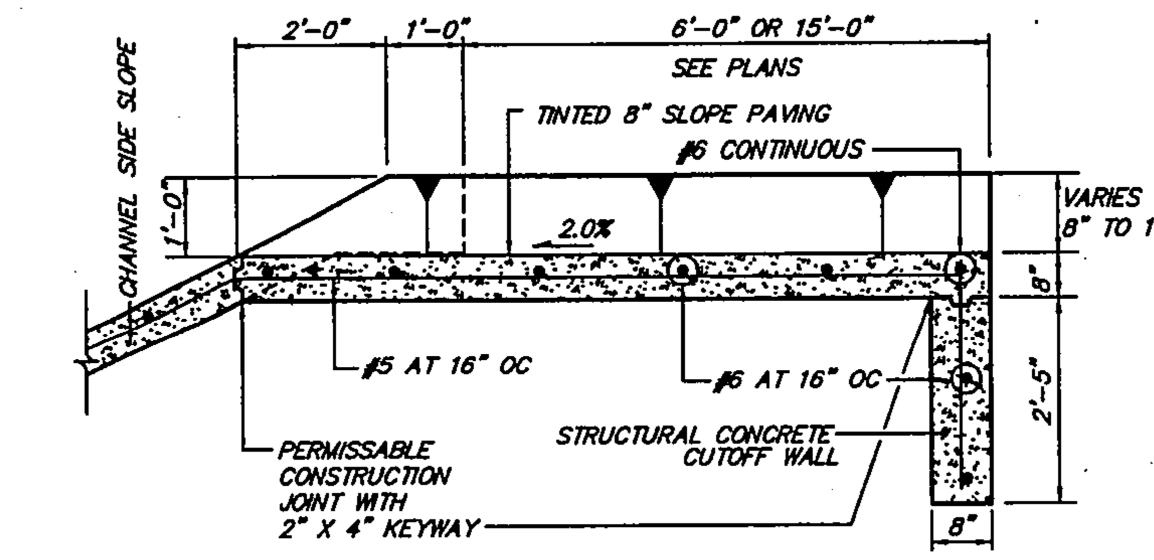

SECTION A–A
SCALE: NONE

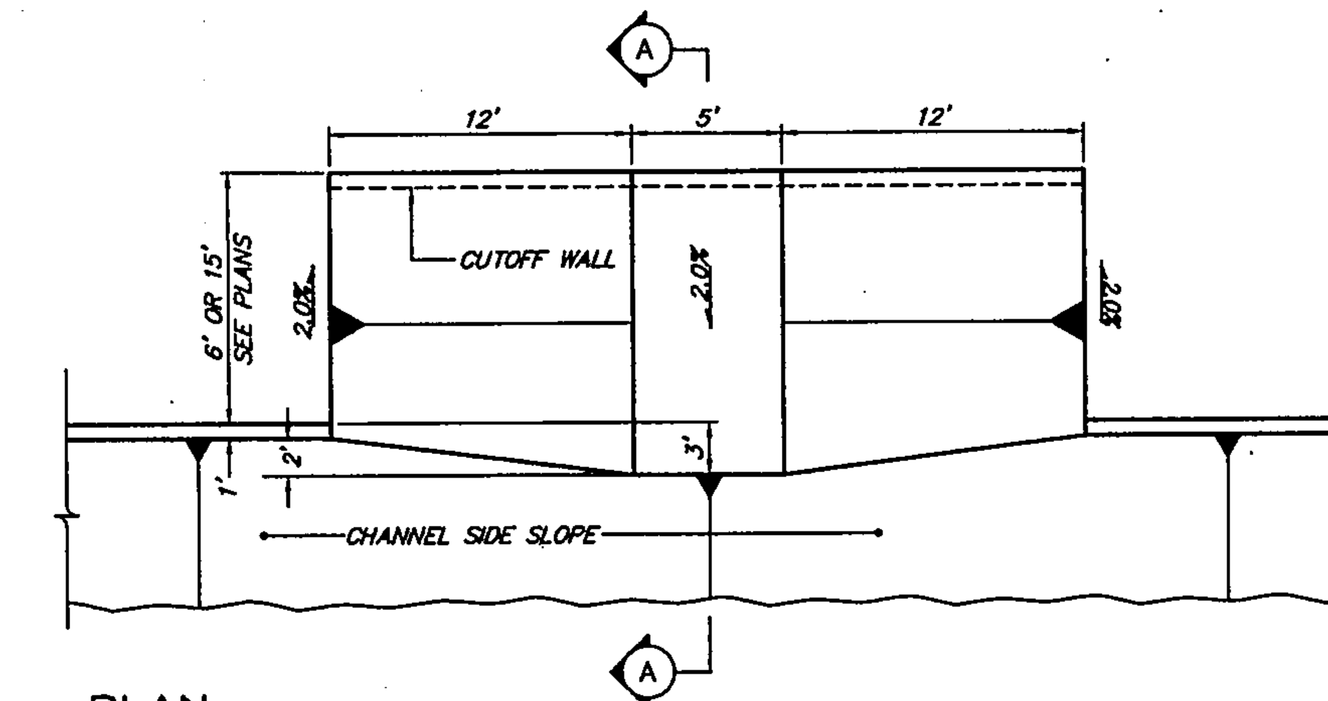

PLAN
SCALE: NONE

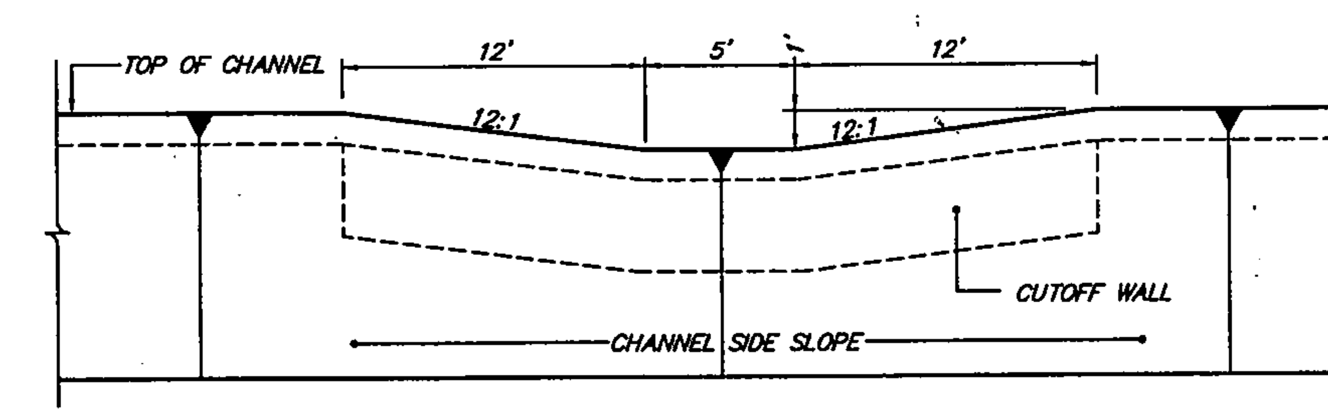

PROFILE
SCALE: NONE

CHANNEL RUNDOWN DETAILS– CHANNEL SIDE SLOPE
NOTE: SEE PLAN & PROFILE SHEETS FOR APPROPRIATE SPOT ELEVATIONS.

AS BUILT INFORMATION	
CONTRACTOR	
WORK STAKED BY Cartesian Surveys Inc.	DATE 2006
INSPECTOR'S ACCEPTANCE BY	DATE
FIELD VERIFICATION BY Cartesian Surveys Inc.	DATE 2006
DRAWINGS CORRECTED BY	DATE
MICRO-FILM INFORMATION	
RECORDED BY	DATE
NO.	

BENCH MARKS

STATION "TRANS" IS LOCATED 6 MI. SOUTHWEST OF DOWNTOWN ALBUQUERQUE, IN THE R.O.W. OF A PLAINS ELECTRIC CO-OP TRANSMISSION LINE. TO REACH STATION FROM INTERSECTION OF CENTRAL AVE. & 98TH ST. SW, GO SOUTH ON 98TH ST. 1.2 MI. TO JUNCTION WITH GIBSON BLVD. & SNOW VISTA BLVD., THEN SOUTHEAST ALONG SNOW VISTA AND CO-OP ELECTRIC TRANSMISSION LINE 0.85 MI. TO PYLON NUMBERED "52". STATION IS JUST EAST OF THIS POINT.
X = 354,899.45, Y = 1,471,822.67, ELEV. = 5118.37 (NAVD29)

SURVEY INFORMATION		
FIELD NOTES		
NO.	BY	DATE

ENGINEER'S SEAL
JAMES D. HUGHES, NEW MEXICO, 14834, REGISTERED PROFESSIONAL ENGINEER
12-13-05

NO.	DATE	REMARKS	BY
		REVISIONS	
		DESIGN	
DESIGNED BY	GJK	DATE	10/01
DRAWN BY	MJR	DATE	10/01
CHECKED BY	DMG	DATE	10/01

dmg MARK GOODWIN & ASSOCIATES, P.A.
CONSULTING ENGINEERS
P.O. BOX 90606
ALBUQUERQUE, NEW MEXICO 87199
(505) 828-2200, FAX (505) 797-9539

ALBUQUERQUE METROPOLITAN
ARROYO FLOOD CONTROL AUTHORITY

AMOLE CHANNEL - PHASE III

TITLE: TYPICAL SECTIONS & TEMPORARY TRANSITION DETAIL

DESIGN REVIEW COMMITTEE — APPROVED JAN - 9 2006 DESIGN REVIEW COMMITTEE
CITY ENGINEER APPROVAL — APPROVED CITY ENGINEER
LAST DESIGN UPDATE MO./DAY/YR. MO./DAY/YR.

CITY PROJECT NO.	ZONE MAP NO.	SHEET	OF
756291	N-9	4	25

A04Jobs\A4009SNH\Amole Channel plans 2\98th Snow Vista Phase3\SH-4-4009-98X-dU_2 11-18-05 DER NHE TAS

F:\A04JOBS\A4009SNH\Amole Channel plans 2\98th Snow Vista Phase3\SH-4-4009-98X-dU_2.dwg, 12/14/2005 3:19:09 PM, PLOTTED BY RDQ

RECORD DRAWINGS
HDR ENGINEERING INC.
Tim Aitken 16678 4-13-2007
Engineer Name NM PE No. Date

RECORD DRAWINGS

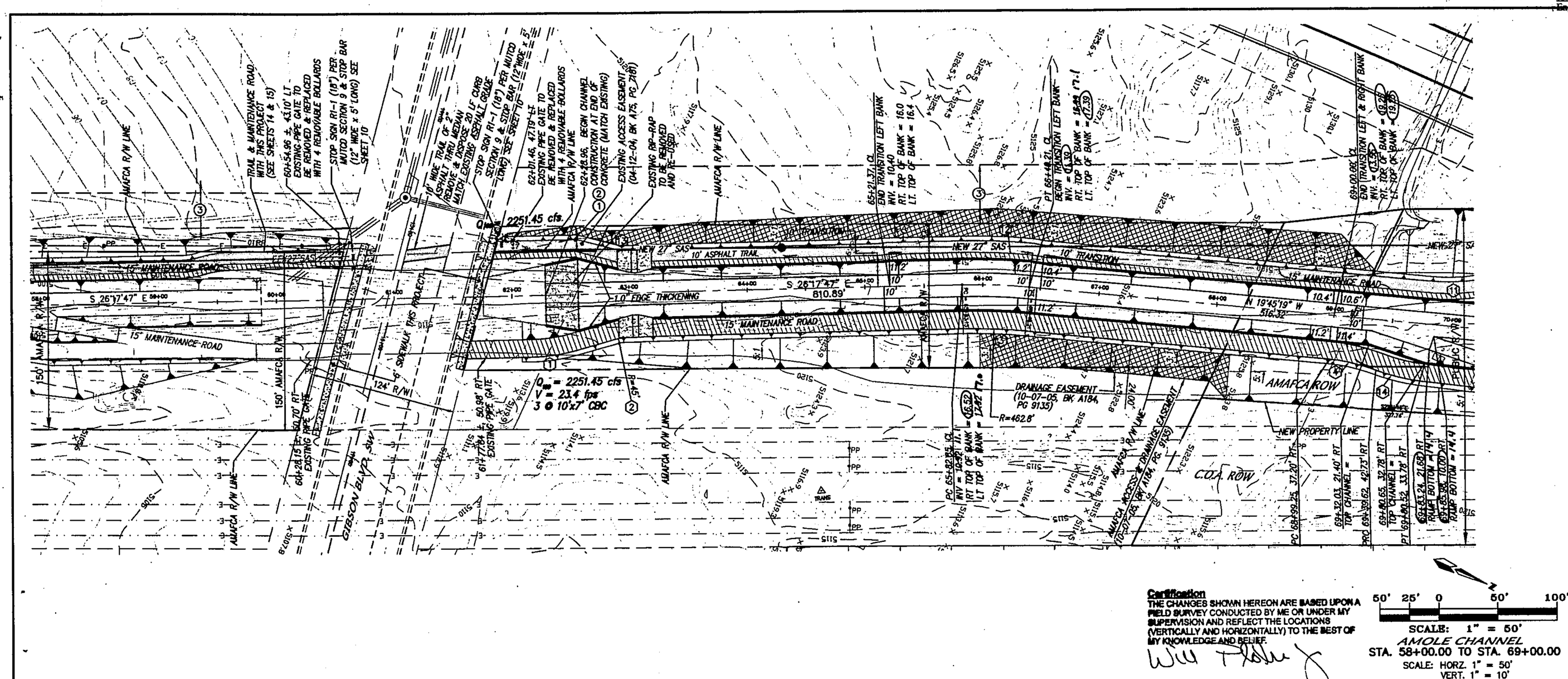

Certification
THE CHANGES SHOWN HEREON ARE BASED UPON A FIELD SURVEY CONDUCTED BY ME OR UNDER MY SUPERVISION AND REFLECT THE LOCATIONS (VERTICALLY AND HORIZONTALLY) TO THE BEST OF MY KNOWLEDGE AND BELIEF.
Will Fletcher

50' 25' 0 50' 100'
SCALE: 1" = 50'
AMOLE CHANNEL
STA. 58+00.00 TO STA. 69+00.00
SCALE: HORZ. 1" = 50'
VERT. 1" = 10'

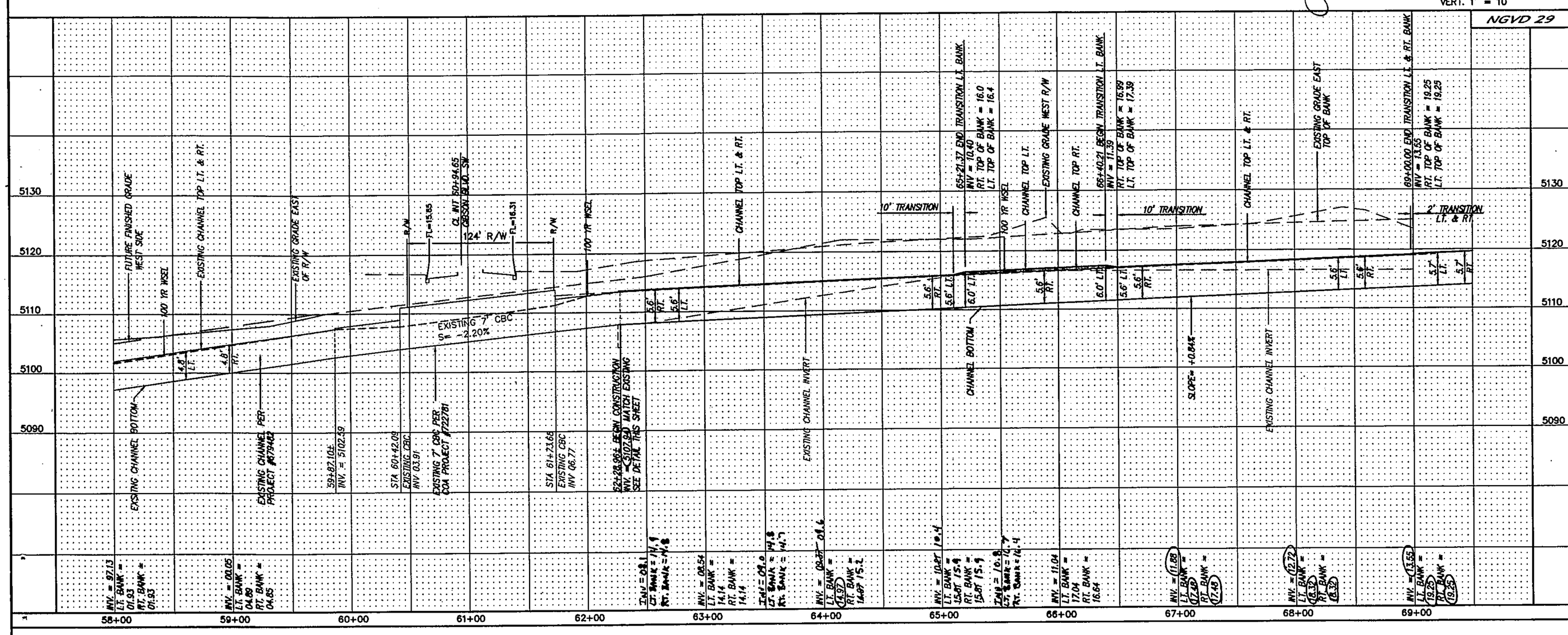

A04Jobs\A4009SNH\Amole Channel plans 2\98th Snow Vista Phase3\SH-5-4009-98X-pp6 01-26-06 DER NHE TAS RDQ

EASEMENTS

1. PROPOSED SANITARY SEWER EASEMENT GRANTED TO ALBUQUERQUE BERNALILLO COUNTY WATER UTILITY AUTHORITY (ABCWUA)
2. PROPOSED DRAINAGE EASEMENTS GRANTED TO AMAFCA FOR SLOPE, DRAINAGE & ACCESS.
3. PROPOSED 50' WIDE TEMPORARY CONSTRUCTION EASEMENT

CURVE DATA – CENTERLINE OF CHANNEL

(27) Δ = 6°32'27"
R = 500.00'
T = 28.57'
L = 57.06'

CURVE DATA – OUTSIDE LINE OF MAINTENANCE ROAD

(1) Δ = 16°52'29" R = 150.00' T = 22.25' L = 44.18'
(2) Δ = 14°39'02" R = 45.00' T = 5.78' L = 11.51'
(3) Δ = 6°32'27" R = 462.80' T = 26.45' L = 52.83'
(4) Δ = 15°36'44" R = 150.00' T = 20.56' L = 40.87'
(11) Δ = 21°25'39" R = 150.00' T = 28.38' L = 56.10'
(12) Δ = 6°36'39" R = 537.20' T = 31.03' L = 61.98'
(13) Δ = 15°49'13" R = 45.00' T = 6.25' L = 12.43'
(14) Δ = 14°16'17" R = 165.00' T = 20.66' L = 41.10'

CHANNEL DEPTH TABLE		
LEFT		
STA. FROM	STA. TO	LINED DEPTH
62+28.68	65+21.09	5.6'
65+21.09	66+39.93	6.0'
66+39.93	72+62.87	5.6'
RIGHT		
STA. FROM	STA. TO	LINED DEPTH
62+28.68	70+98.48	5.6'

LEGEND

- TINTED BRICK PATTERN CONCRETE MEDIAN PAVEMENT COA STD DWG 2408
- MAINTENANCE ROAD ASPHALT 15' WIDE COA STD DWG 2415B
- ASPHALT TRAIL 10' WIDE, 2" THICK COA STD DWG 2415B
- NATIVE SEED & GRAVEL MULCH SLOPE AREA ALONG TRAIL 3:1 OR STEEPER
- PAVED SECTION TO BE REMOVED
- RIP-RAP TO BE REMOVED / REUSED
- RIP-RAP TO BE PLACED
- NEW CONCRETE THIS PROJECT
- EXIST 10' WIDE A.C. TRAIL
- RETAINING WALL W/RAILING PER DETAILS SHEETS 7, 8 & 9

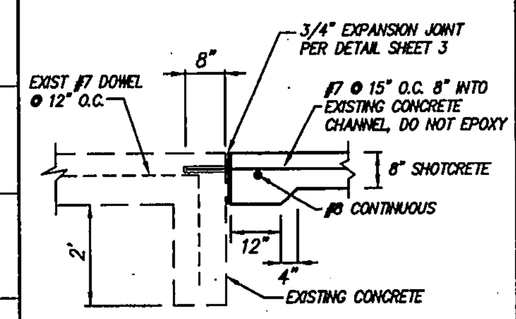

CONNECTION TO EXISTING CONCRETE CHANNEL DETAIL
N.T.S.
STA. 62+28.68 ±

AS BUILT INFORMATION
CONTRACTOR
WORK STAKED BY
INSPECTORS ACCEPTANCE
VERIFICATION BY DATE
DRAWINGS CORRECTED BY DATE
MICRO-FILM INFORMATION
RECORDED BY DATE
NO.

BENCH MARKS
STATION "TRANS" IS LOCATED 6 MI. SOUTHEST OF DOWNTOWN ALBUQUERQUE, IN THE R.O.W. OF A PLAINS ELECTRIC CO-OP TRANSMISSION LINE. TO REACH STATION FROM INTERSECTION OF CENTRAL AVE. & 98TH ST. SW, GO SOUTH ON 98TH ST. 1.2 MI. TO JUNCTION WITH GIBSON BLVD. & SNOW VISTA BLVD., THEN SOUTHEAST ALONG SNOW VISTA AND CO-OP ELECTRIC TRANSMISSION LINE 0.85 MI. TO PYLON NUMBERED "52". STATION IS JUST EAST OF THIS POINT. X = 354,899.45, Y = 1,471,822.67, ELEV. = 5118.37 (NAVD29).

SURVEY INFORMATION
FIELD NOTES
NO. BY DATE

ENGINEER'S SEAL
1-26-06

NO.	DATE	REMARKS	BY
		REVISIONS	

DESIGNED BY JDH DATE 05/04
DRAWN BY DER DATE 05/04
CHECKED BY DMG DATE 05/04

MARK GOODWIN & ASSOCIATES, P.A.
CONSULTING ENGINEERS
P.O. BOX 90606
ALBUQUERQUE, NEW MEXICO 87199
(505) 828-2200, FAX (505) 797-9539

ALBUQUERQUE METROPOLITAN ARROYO FLOOD CONTROL AUTHORITY

TITLE: *AMOLE CHANNEL - PHASE III*
AMOLE CHANNEL
PLAN AND PROFILE

DESIGN REVIEW COMMITTEE — FEB 22 2006
CITY ENGINEER APPROVAL — FEB 22 2006 CITY ENGINEER
LAST DESIGN UPDATE | MO./DAY/YR. | MO./DAY/YR.

CITY PROJECT NO. 756291 | ZONE MAP NO. N-9 | SHEET 5 OF 25

RECORD DRAWINGS
HDR ENGINEERING INC.
Engineers Name 16678 NMPE No. 4-13-2007 Date

RECORD DRAWINGS

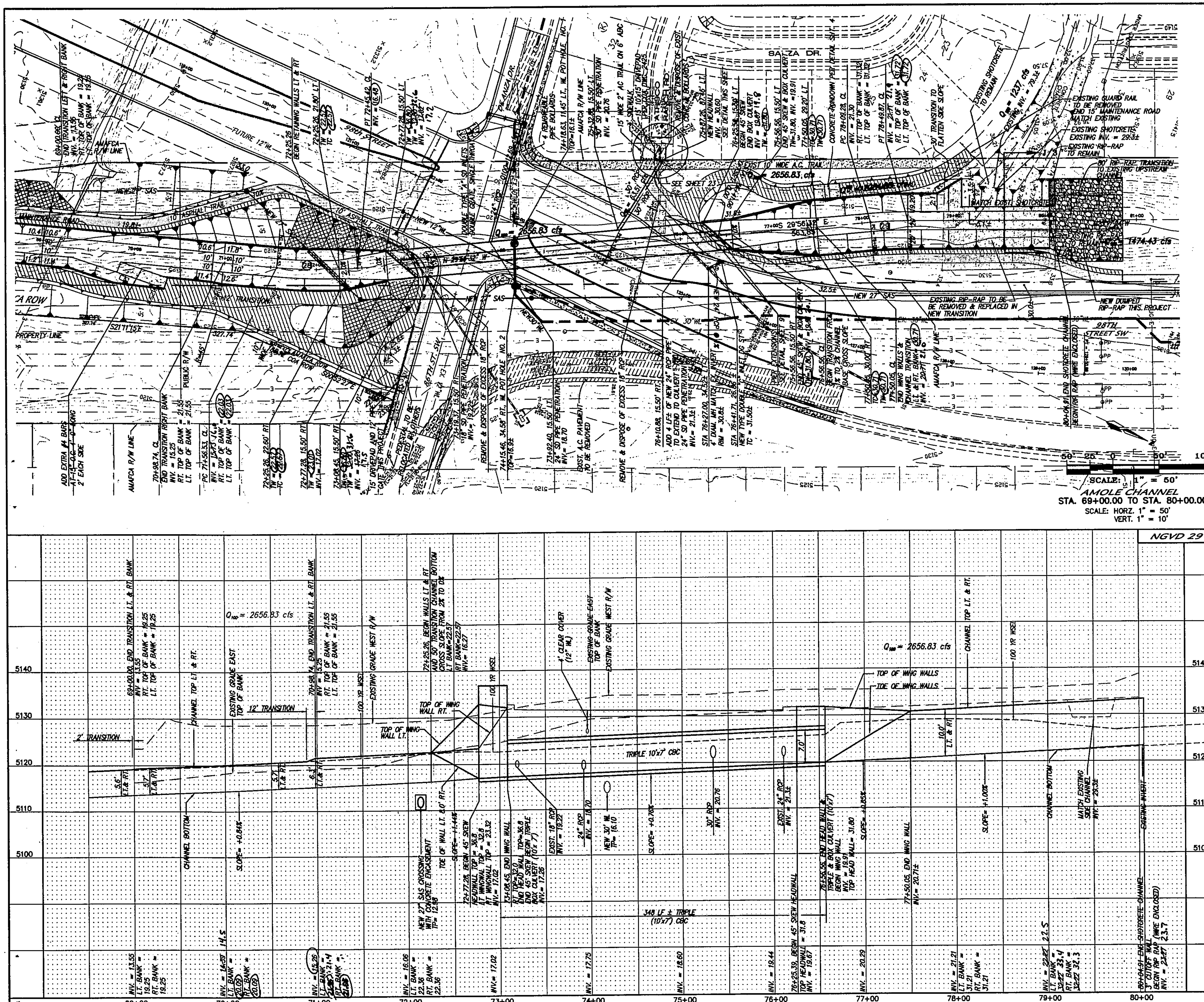

NOTES

CURVE DATA – CENTERLINE OF CHANNEL

25	26
L=88.90	L=40.60
R=500.00	R=500.00
Δ=10°11'12"	Δ=4°39'08"
Tan=44.57	Tan=20.31

CHANNEL DEPTH TABLE		
LEFT		
STA. FROM	STA. TO	LINED DEPTH
66+39.93	72+62.87	5.5'
77+49.77	79+76.06	3.8'
RIGHT		
STA. FROM	STA. TO	LINED DEPTH
62+28.68	70+98.48	5.5'
70+98.48	72+62.87	6.0'
77+49.77	79+76.06	3.8'

Certification
THE CHANGES SHOWN HEREON ARE BASED UPON A FIELD SURVEY CONDUCTED BY ME OR UNDER MY SUPERVISION AND REFLECT THE LOCATIONS (VERTICALLY AND HORIZONTALLY) TO THE BEST OF MY KNOWLEDGE AND BELIEF.

LEGEND

- TINTED BRICK PATTERN CONCRETE MEDIAN PAVEMENT COA STD DWG 2408
- MAINTENANCE ROAD ASPHALT 15' WIDE COA STD DWG 2415B
- ASPHALT TRAIL 10' WIDE, 2" THICK COA STD DWG 2415B
- NATIVE SEED & GRAVEL MULCH SLOPE AREA ALONG TRAIL 3:1 OR STEEPER
- PAVED SECTION TO BE REMOVED
- RIP-RAP TO BE REMOVED / REUSED
- RIP-RAP TO BE PLACED
- NEW CONCRETE THIS PROJECT
- EXIST 10' WIDE A.C. TRAIL
- RETAINING WALL W/RAILING PER DETAILS SHEETS 7, 8 & 9

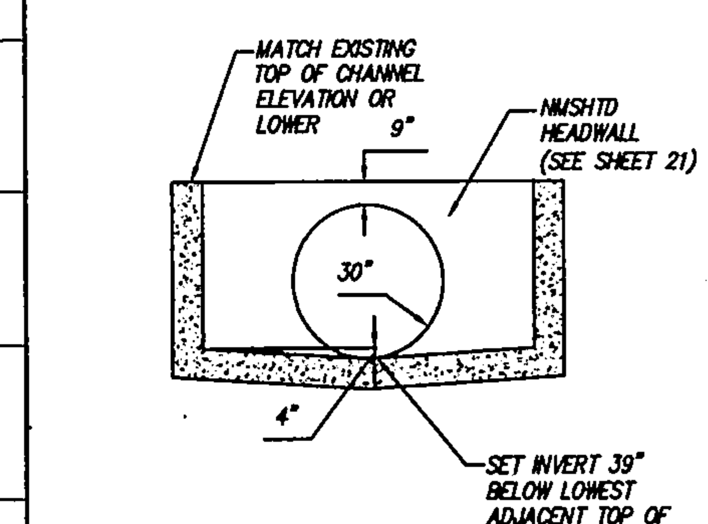

HEADWALL DETAIL
N.T.S.
CHANNEL PER COA STD DWG 2260

AS BUILT INFORMATION	
CONTRACTOR	
WORK STAKED BY	Consolidated Surveys Inc. DATE 2006
ACCEPTANCE DATE	
FIELD VERIFICATION BY	Consolidated Surveys Inc. DATE 2006
DRAWINGS CORRECTED BY	DATE
MICRO-FILM INFORMATION	
RECORDED BY	DATE
NO.	

BENCH MARKS
STATION "TRANS" IS LOCATED 6 MI. SOUTHWEST OF DOWNTOWN ALBUQUERQUE, IN THE R.O.W. OF A PLAINS ELECTRIC CO-OP TRANSMISSION LINE. TO REACH STATION FROM INTERSECTION OF CENTRAL AVE. & 98TH ST. SW, GO SOUTH ON 98TH ST. 1.2 MI. TO JUNCTION WITH GIBSON BLVD. & SNOW VISTA BLVD., THEN SOUTHEAST ALONG SNOW VISTA AND CO-OP ELECTRIC TRANSMISSION LINE 0.85 MI. TO PYLON NUMBERED "52". STATION IS JUST EAST OF THIS POINT.
X = 354,899.45, Y = 1,471,822.67, ELEV. = 5118.37 (NAVD29).

SURVEY INFORMATION		
FIELD NOTES		
NO.	BY	DATE

ENGINEER'S SEAL

NO.	DATE	REMARKS	BY
REVISIONS			
DESIGN			
DESIGNED BY	JDH	DATE	05/04
DRAWN BY	DER	DATE	05/04
CHECKED BY	DMG	DATE	05/04

dmg MARK GOODWIN & ASSOCIATES, P.A.
CONSULTING ENGINEERS
P.O. BOX 90606
ALBUQUERQUE, NEW MEXICO 87199
(505) 828-2200, FAX (505) 797-9539

ALBUQUERQUE METROPOLITAN
ARROYO FLOOD CONTROL AUTHORITY

TITLE: AMOLE CHANNEL - PHASE III
CULVERT & CHANNEL
PLAN AND PROFILE

DESIGN REVIEW COMMITTEE	CITY ENGINEER APPROVAL	MO./DAY/YR.	MO./DAY/YR.
FEB 2 2 2006	FEB 2 2 2006 CITY ENGINEER	LAST DESIGN UPDATE	

CITY PROJECT NO.	ZONE MAP NO.	SHEET	OF
756291	N-9	6	25

A04Jobs\A4009SNH\Amole Channel plans 2\98th Snow Vista Phase3\SH-6-4009-98X-pp7 01-25-06 DER NHE TAS RDQ

RECORD DRAWINGS
HDR ENGINEERING INC.
Engineers Name 16678 4-13-2007
NMPE No. Date

○ KEYED NOTES:

1. #5 X 4'-0" DOWEL FROM CBC TO TRANSITION WALL AT 10" O.C. SEE DETAIL ON SHEET 9
2. PIPE RAILING AS PER DETAILS ON SHEET 9, TYPICAL
3. STEP FOOTING, SEE DETAIL "B" ON SHEET 9

Certification
THE CHANGES SHOWN HEREON ARE BASED UPON A FIELD SURVEY CONDUCTED BY ME OR UNDER MY SUPERVISION AND REFLECT THE LOCATIONS (VERTICALLY AND HORIZONTALLY) TO THE BEST OF MY KNOWLEDGE AND BELIEF.

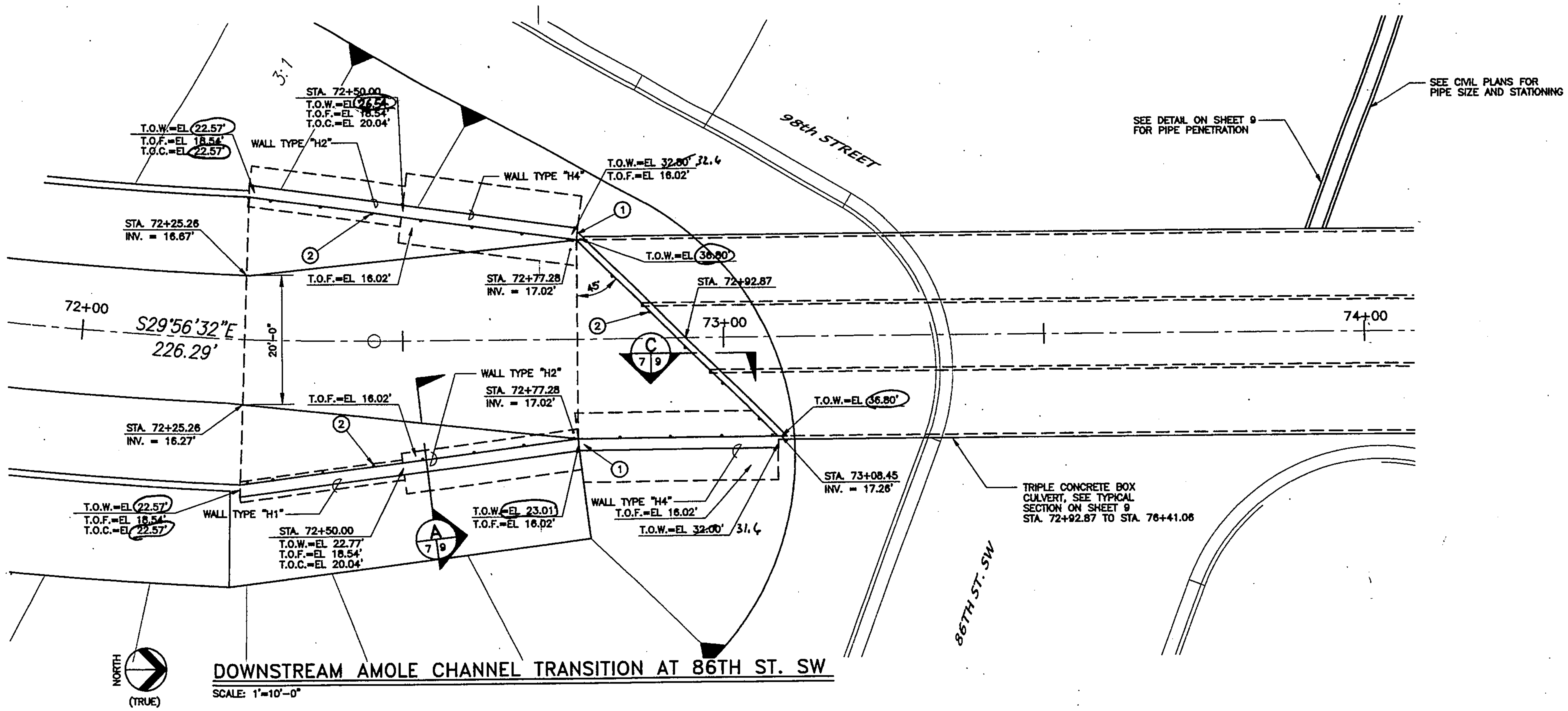

DOWNSTREAM AMOLE CHANNEL TRANSITION AT 86TH ST. SW

SCALE: 1"=10'-0"

ABBREVIATION LEGEND

A.B.	ANCHOR BOLT	L.L.H.	LONG LEG HORIZONTAL
ALT.	ALTERNATE	L.L.O.	LONG LEG OUT
ARCH.	ARCHITECTURAL	L.L.V.	LONG LEG VERTICAL
BOF.	BOTTOM OF FOOTING	L.P.	LOW POINT
BM.	BEAM	M.C.J.	MASONRY CONTROL JOINT
B.O.S.	BOTTOM OF STRUCTURAL STEEL	M.D.	METAL DECK
BRDG.	BRIDGING	MAX.	MAXIMUM
C/C	CENTER TO CENTER	MECH.	MECHANICAL
C.J.	CONSTRUCTION JOINT	MIN.	MINIMUM
CL	CENTER LINE	MISC.	MISCELLANEOUS
CLR.	CLEAR	N.S.	NEAR SIDE
CMU	CONCRETE MASONRY UNIT	NTS	NOT TO SCALE
COL.	COLUMN	O.C.	ON CENTERS
CONC.	CONCRETE	O.F.	OUTSIDE FACE
CONT.	CONTINUOUS	OPNG.	OPENING
DBL.	DOUBLE	P/P	PANEL POINT TO PANEL POINT
DIA.	DIAMETER	P/T	POST TENSION
DIR.	DIRECTION	P.C.	PRECAST CONCRETE
DWLS.	DOWELS	PL.	PLATE
E.E.	EACH END	REINF.	REINFORCING
E.F.	EACH FACE	S/F	STEP FOOTING ELEVATIONS
E.J.	EXPANSION JOINT	S.J.	STEEL JOIST
E.S.	EACH SIDE	S.L.O.	SHORT LEG OUT
E.W.	EACH WAY	S.L.V.	SHORT LEG VERTICAL
EA.	EACH	SCH.	SCHEDULE
EL.	ELEVATION	T.B.	TIE BEAM
ELEV.	ELEVATION	T.C.	TOP OF COLUMN
EXP. A.B.	EXPANSION ANCHOR BOLT	T.C.C.	TOP OF CONCRETE COLUMN
F.D.	FLOOR DRAIN	TDE	TURN DOWN EDGE
F.S.	FAR SIDE	T.O.C.	TOP OF CHANNEL
FIN. FLR.	FINISH FLOOR	T.O.F.	TOP OF FOOTING
FND.	FOUNDATION	T.O.C.B.	TOP OF CONCRETE BEAM
FTG.	FOOTING	T.O.J.	TOP OF JOIST
GA.	GAUGE	T.O.P.	TOP OF PARAPET
G.B.	GRADE BEAM	T.O.S.	TOP OF STRUCTURAL STEEL
G.L.B.	GLU-LAM BEAM	T.O.B.	TOP OF BEAM
GALV.	GALVANIZED	T.O.P.	TOP OF PILE
GR	GRADE	T.O.W.	TOP OF WALL
H.A.S.	HEADED ANCHOR STUDS	T.P.C.	TOP OF PILE CAP
H.C.M.	HOLLOW CORE MASONRY	T&B	TOP AND BOTTOM
H.P.	HIGH POINT	TS	TUBE STEEL
HK.	HOOK	TYP.	TYPICAL
HORZ.	HORIZONTAL	U.N.O.	UNLESS NOTED OTHERWISE
H.S.B.	HIGH STRENGTH BOLTS	VERT.	VERTICAL
I.F.	INSIDE FACE	W/	WITH
JST.BRG.	JOIST BEARING	W/O	WITHOUT
JST.	JOIST	W.P.	WORKING POINT
JNT.	JOINT	WT.	WEIGHT
K.O.B.B.	KNOCK OUT BOND BEAM	WWF	WELDED WIRE FABRIC

GENERAL NOTES

1. ALL CONCRETE BOX AND TRANSITION WORK SHALL CONFORM TO NEW MEXICO STATE HIGHWAY AND TRANSPORTATION DEPARTMENT SPECIFICATIONS, 1994.
2. REINFORCING BARS SHALL BE GRADE 60 UNLESS NOTED OTHERWISE.
3. ALL CONCRETE SHALL HAVE A MINIMUM 28 - DAY COMPRESSIVE STRENGTH OF 3000 PSI (CLASS A) WITH 6% ENTRAINED AIR. CHAMFER ALL EXPOSED EDGES OF CONCRETE 3/4 INCH UNLESS OTHERWISE NOTED.
4. PROVIDE 12" SUBGRADE PREP AS PER COA SPECIFICATIONS SECTION 301 UNDERNEATH CBC's AND TRANSITION STRUCTURES. EXTEND SUBGRADE PREP 12" BEYOND THE EDGES OF FOOTINGS.

AS BUILT INFORMATION
CONTRACTOR
WORK STARTED BY DATE 2008
INSPECTOR'S ACCEPTANCE BY DATE
FIELD VERIFICATION BY Cartesian Surveys Inc. DATE 2008
DRAWINGS CORRECTED BY DATE
MICRO-FILM INFORMATION
RECORDED BY DATE
NO.

BENCH MARKS

SURVEY INFORMATION
FIELD NOTES
NO. BY DATE

ENGINEER'S SEAL

NO.	DATE	REMARKS	BY
		REVISIONS	

DESIGN
DESIGNED BY JPG DATE 12/13/05
DRAWN BY TEP DATE 12/13/05
CHECKED BY RJJ DATE 12/13/05

10' 5' 0 10' 20'
SCALE: 1" = 10'

104144
CMI, Inc.
Mechanical / Electrical / Structural Consulting Engineers
6400 Uptown Boulevard, N.E. Suite 500E Albuquerque, New Mexico 87110
(505) 884-8868 FAX 884-7046

CITY OF ALBUQUERQUE
PUBLIC WORKS DEPARTMENT

TITLE: AMOLE CHANNEL IMPROVEMENTS
DOWNSTREAM CONCRETE TRANSITIONS

DESIGN REVIEW COMMITTEE: APPROVED JAN - 9 2006 DESIGN REVIEW COMMITTEE
CITY ENGINEER APPROVAL: APPROVED JAN - 9 CITY ENGINEER
LAST DESIGN UPDATE MO./DAY/YR. MO./DAY/YR.

CITY PROJECT NO. 679485
ZONE MAP NO. N-9
SHEET 7 OF 19

RECORD DRAWINGS

RECORD DRAWINGS
HDR ENGINEERING INC.
T. Ault 11678 4/12/2007
Engineers Name NMPE No. Date

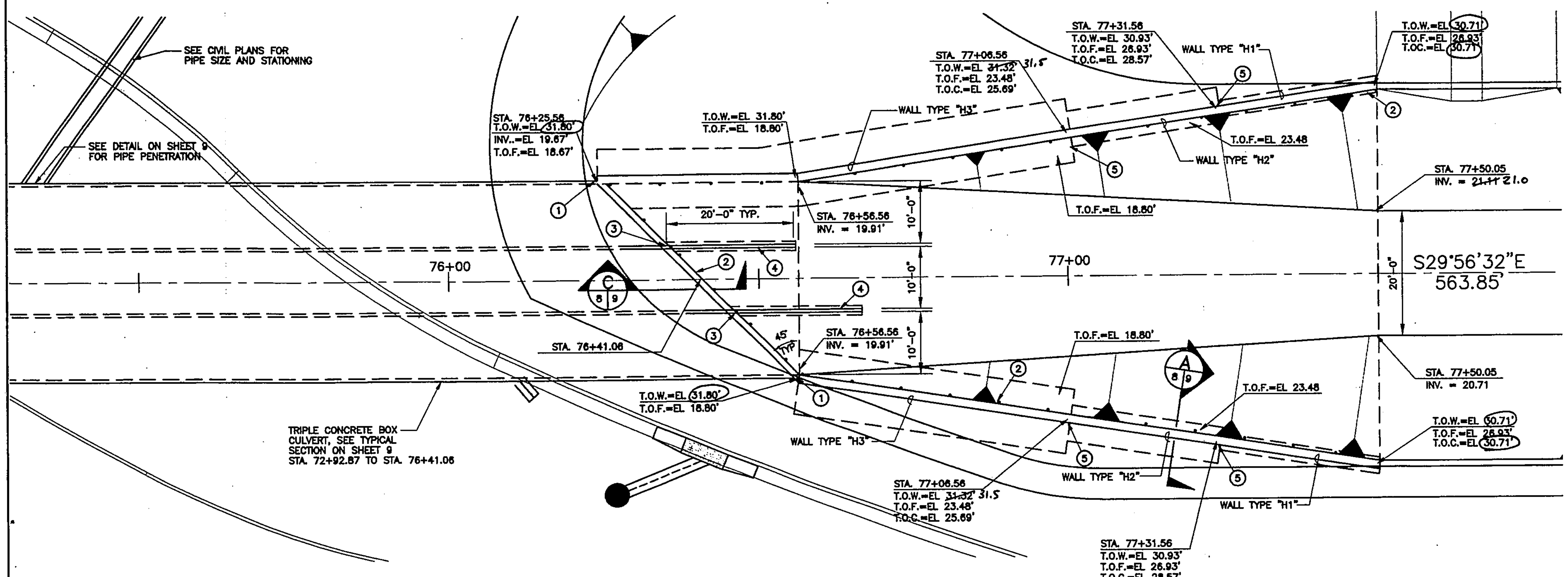

NORTH (TRUE)

UPSTREAM AMOLE CHANNEL TRANSITION AT 98TH STREET SW

SCALE: 1'=10'-0"

○ KEYED NOTES:

1. #5 X 4'-0" DOWEL FROM CBC TO TRANSITION WALL AT 10" O.C. SEE DETAIL ON SHEET 9
2. PIPE RAILING AS PER DETAILS ON SHEET 9, TYPICAL
3. #5 X 4'-0" DOWEL FROM CBC TO SPLITTER WALL AT 12" O.C. SEE DETAIL ON SHEET 9
4. CONCRETE SPLITTER WALL SEE DETAILS ON SHEET 9
5. STEP FOOTING, SEE DETAIL "B" ON SHEET 9

Certification
THE CHANGES SHOWN HEREON ARE BASED UPON A FIELD SURVEY CONDUCTED BY ME OR UNDER MY SUPERVISION AND REFLECT THE LOCATIONS (VERTICALLY AND HORIZONTALLY) TO THE BEST OF MY KNOWLEDGE AND BELIEF.

GENERAL NOTES

1. ALL CONCRETE BOX AND TRANSITION WORK SHALL CONFORM TO NEW MEXICO STATE HIGHWAY AND TRANSPORTATION DEPARTMENT SPECIFICATIONS, 1994.
2. REINFORCING BARS SHALL BE GRADE 60 UNLESS NOTED OTHERWISE.
3. ALL CONCRETE SHALL HAVE A MINIMUM 28 – DAY COMPRESSIVE STRENGTH OF 3000 PSI (CLASS A) WITH 6% ENTRAINED AIR. CHAMFER ALL EXPOSED EDGES OF CONCRETE 3/4 INCH UNLESS OTHERWISE NOTED.
4. PROVIDE 12" SUBGRADE PREP AS PER COA SPECIFICATIONS SECTION 301 UNDERNEATH CBC's AND TRANSITION STRUCTURES. EXTEND SUBGRADE PREP 12" BEYOND THE EDGES OF FOOTINGS.

AS BUILT INFORMATION — CONTRACTOR / WORK STAKED BY / DATE / INSPECTOR'S ACCEPTANCE BY / DATE / FIELD VERIFICATION BY Cartesian Surveys Inc. DATE / DRAWINGS CORRECTED BY / DATE

MICRO-FILM INFORMATION — RECORDED BY / DATE / NO.

BENCH MARKS

SURVEY INFORMATION — FIELD NOTES — NO. / BY / DATE

ENGINEER'S SEAL

NO.	DATE	REMARKS	BY
		REVISIONS	
		DESIGN	

DESIGNED BY JPG DATE 12/13/05
DRAWN BY TEP DATE 12/13/05
CHECKED BY RJ DATE 12/13/05

SCALE: 1" = 10'

104144
CMI, Inc.
Mechanical / Electrical / Structural Consulting Engineers
6400 Uptown Boulevard, N.E. Suite 505E, Albuquerque, New Mexico 87110
(505) 884-5868 FAX 884-7048

CITY OF ALBUQUERQUE
PUBLIC WORKS DEPARTMENT

TITLE: AMOLE CHANNEL IMPROVEMENTS
UPSTREAM CONCRETE TRANSITIONS

DESIGN REVIEW COMMITTEE — APPROVED JAN - 9 2006 DESIGN REVIEW COMMITTEE
CITY ENGINEER APPROVAL — APPROVED JAN - 9 2006 CITY ENGINEER
MO./DAY/YR. MO./DAY/YR.
LAST DESIGN UPDATE

CITY PROJECT NO. 679485 | ZONE MAP NO. N-9 | SHEET 8 OF 19

RECORD DRAWINGS
HDR ENGINEERING INC.
Tim Archuleta 16678 4-12-2007
Engineers Name NMPE No. Date

RECORD DRAWINGS

RETAINING WALL SCHEDULE

TYPE	"H"	"A"	"B"	"C"	"D"	"T"	"E"	"F" BARS
"H1"	0'-0" TO 4'-0"	2'-0"	0'-6"	0'-10"	N/A	8"	2'-6"	#5 @ 10" O.C.
"H2"	4'-1" TO 8'-0"	5'-6"	1'-6"	3'-0"	N/A	1'-0"	2'-6"	#5 @ 10" O.C.
"H3"	8'-1" TO 13'-0"	10'-2"	4'-0"	5'-0"	2'-0"	1'-2"	4'-0"	#7 @ 10" O.C.
"H4"	13'-1" TO 17'-1"	12'-0"	5'-8"	5'-0"	2'-6"	1'-4"	4'-0"	#7 @ 10" O.C.

NOTE: FOR WALL TYPE "H1" PROVIDE ONE MAT OF #5 BARS AT 10" O.C., EACH WAY, CENTERED IN THE WALL.

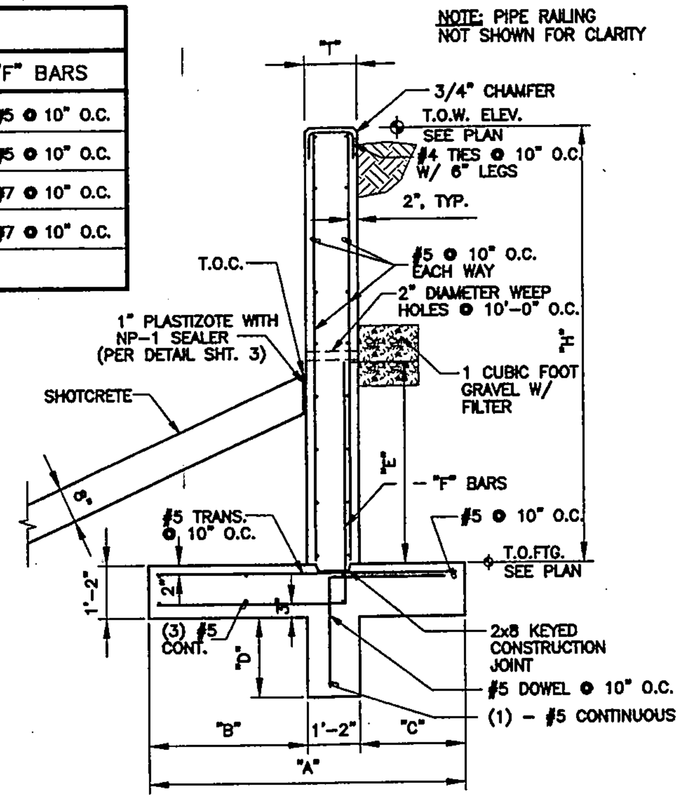

RETAINING WALL (A/9, 7, 8)
1/2" = 1'-0"

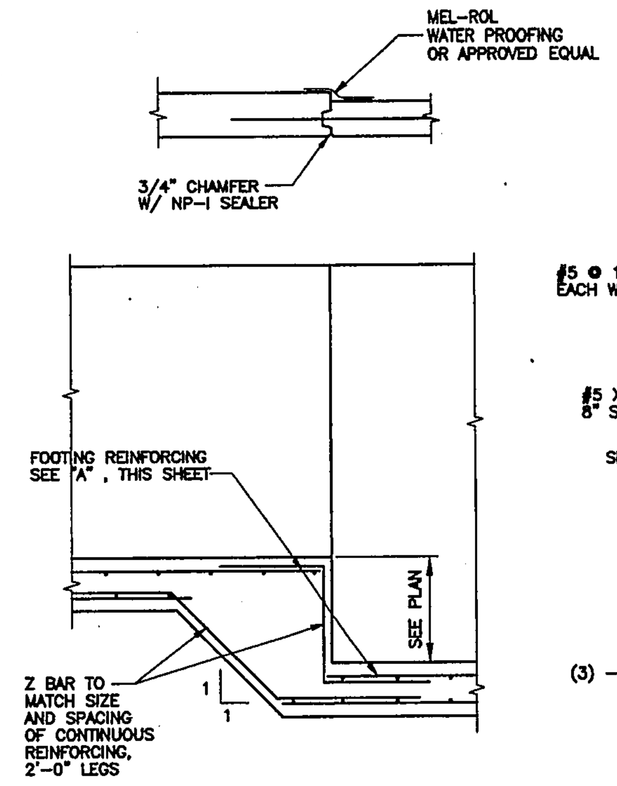

STEP FOOTING DETAIL (B/9, 7, 8)
1/2" = 1'-0"

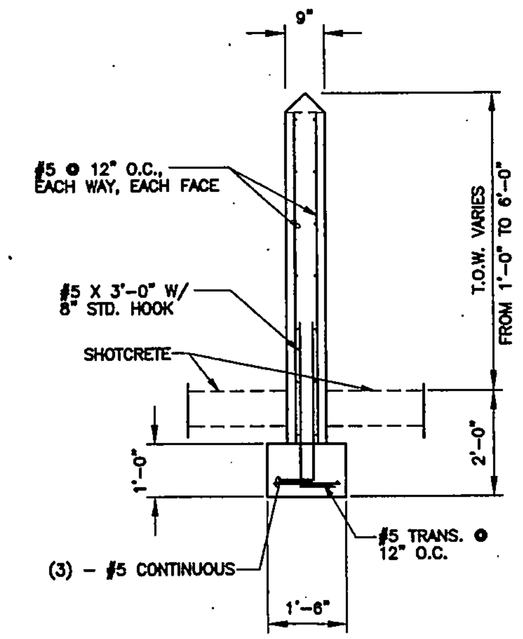

SPLITTER WALL SECTION
SCALE: 1/2"=1'-0"

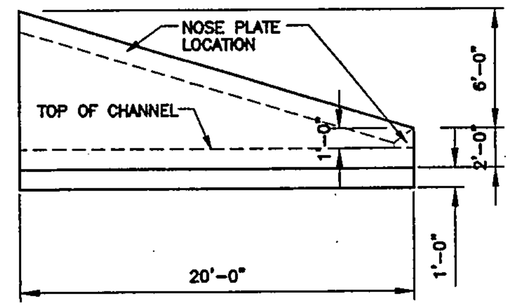

SPLITTER WALL ELEVATION
NO SCALE

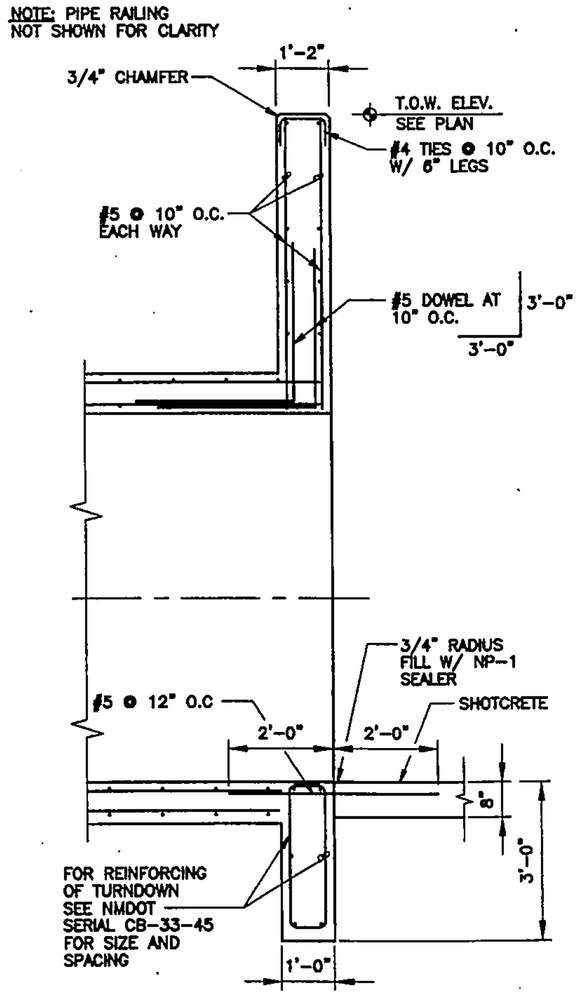

SECTION @ END OF BOX (C/9, 7, 8)
1/2" = 1'-0"

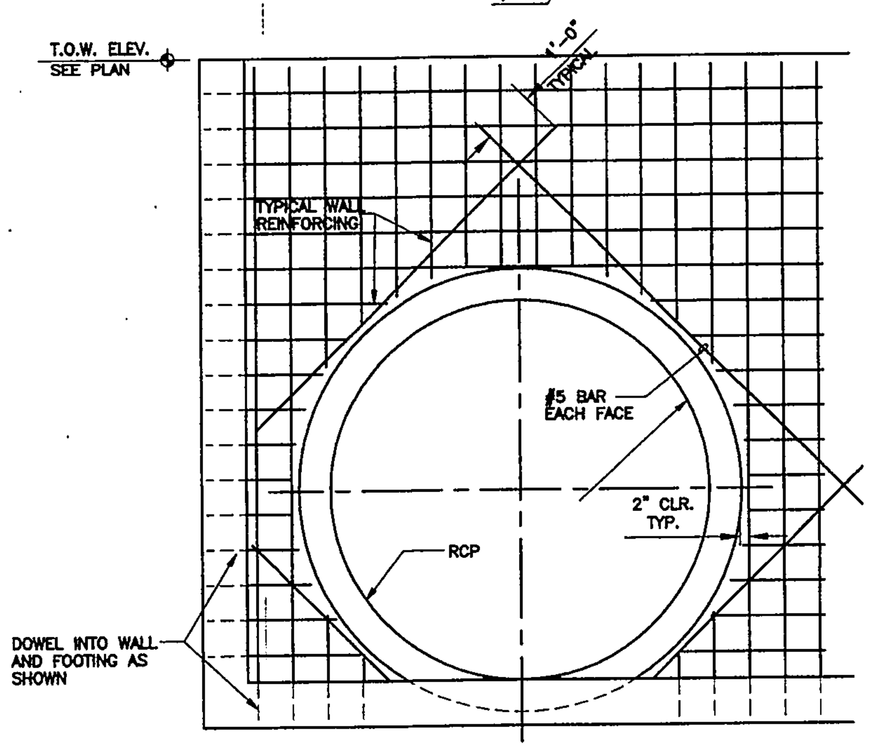

RCP WALL PENETRATION DETAIL
NO SCALE

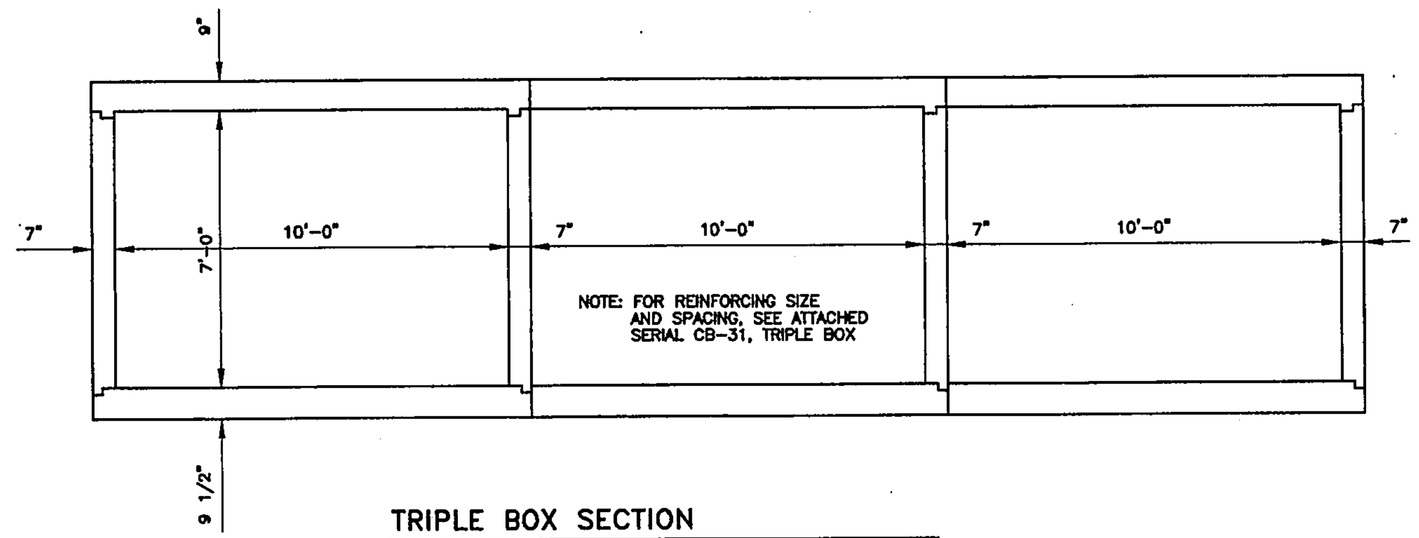

TRIPLE BOX SECTION
3/8" = 1'-0"

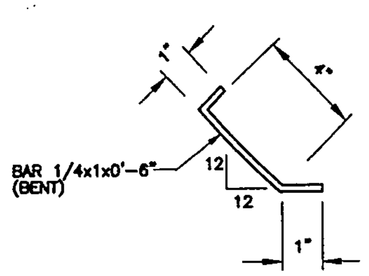

ANCHOR DETAIL
NO SCALE

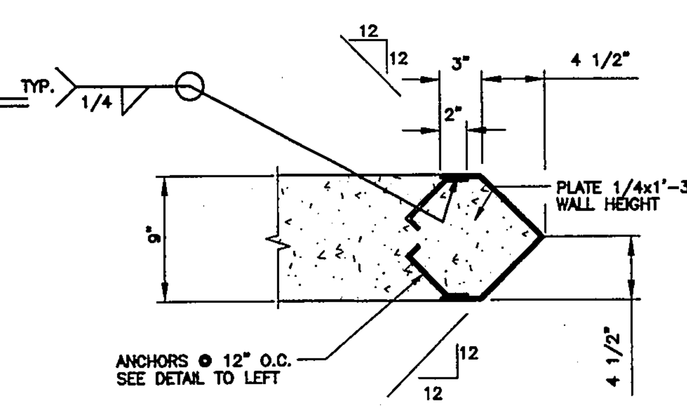

NOSE PLATE DETAIL @ INTERIOR WALL
NO SCALE

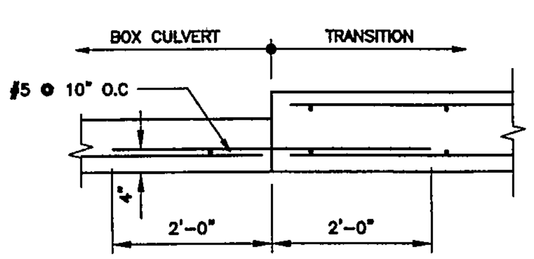

BOX CULVERT / TRANSITION CONNECTION DETAIL
3/4" = 1'-0"

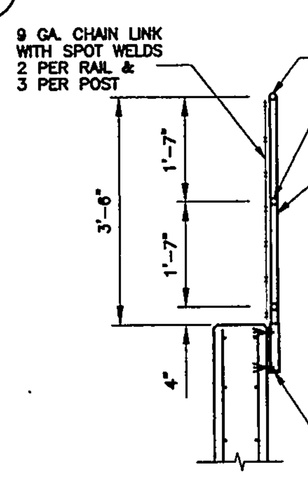

RAILING DETAIL
1/2" = 1'-0"

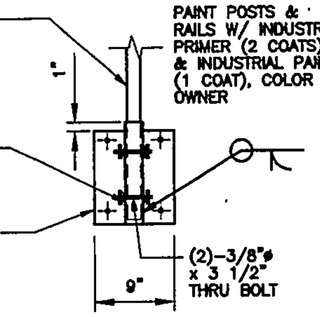

BASE DETAIL
1" = 1'-0"

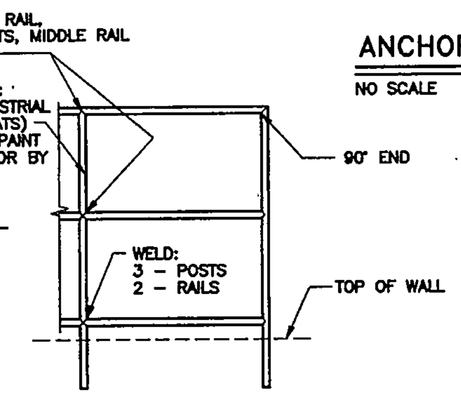

END RAILING DETAIL
1/2" = 1'-0"

AS BUILT INFORMATION
CONTRACTOR
WORK STAKED BY: Cartesian Surveys Inc. DATE 2006
INSPECTED BY DATE
ACCEPTANCE BY DATE
FIELD VERIFICATION BY: Cartesian Surveys Inc. DATE 2006
DRAWINGS CORRECTED BY DATE
MICRO-FILM INFORMATION
RECORDED BY DATE
NO.

BENCH MARKS

SURVEY INFORMATION
FIELD NOTES
NO. BY DATE

ENGINEER'S SEAL
REGISTERED PROFESSIONAL ENGINEER (481) 12/13/05

NO.	DATE	REMARKS	BY
		REVISIONS	

DESIGN
DESIGNED BY JPG DATE 12/13/05
DRAWN BY TEP DATE 12/13/05
CHECKED BY RJ DATE 12/13/05

104144
CME, Inc.
Mechanical / Electrical / Structural Consulting Engineers
6400 Uptown Boulevard, N.E. Suite 505E
Albuquerque, New Mexico 87110
(505) 884-8868
FAX 884-7048

CITY OF ALBUQUERQUE
PUBLIC WORKS DEPARTMENT

TITLE: AMOLE CHANNEL IMPROVEMENTS SECTIONS AND DETAILS

DESIGN REVIEW COMMITTEE: APPROVED JAN - 9 2006 DESIGN REVIEW COMMITTEE
CITY ENGINEER APPROVAL: APPROVED JAN - 9 CITY ENGINEER
LAST DESIGN UPDATE MO./DAY/YR. MO./DAY/YR.

CITY PROJECT NO. 679485
ZONE MAP NO. N-9
SHEET 9 OF 19

HDR ENGINEERING INC.
16678 4-13-2007
Engineer Name NMPE No. Date

RECORD DRAWINGS

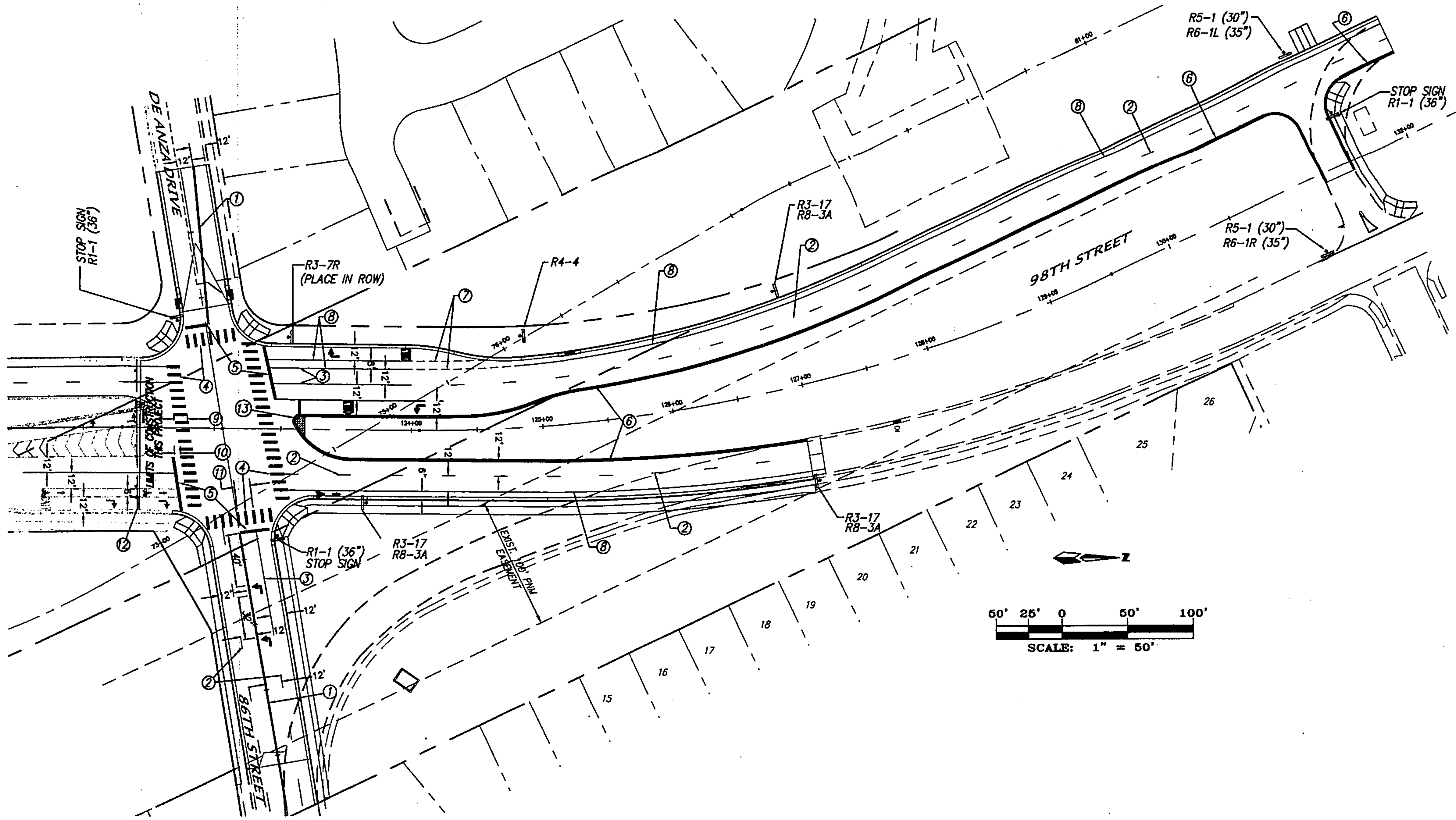

N O T E S

1. 4" DOUBLE YELLOW REFLECTORIZED THERMO PLASTIC STRIPE
2. 4" DASH WHITE REFLECTORIZED THERMO PLASTIC STRIPE (10' STRIPE, 30' GAP)
3. 4" SOLID WHITE REFLECTORIZED THERMO PLASTIC STRIPE
4. 2'x10' WHITE REFLECTOR AND THERMO PLASTIC "ZEBRA BAR"
5. 24" STOP BAR WITH WHITE REFLECTORIZED THERMO PLASTIC STRIPE
6. 4" SOLID YELLOW REFLECTORIZED THERMO PLASTIC STRIPE
7. 4" DOTTED WHITE REFLECTORIZED THERMO PLASTIC STRIPE (2' STRIPE, 4' GAP)
8. 6" SOLID WHITE REFLECTORIZED THERMO PLASTIC STRIPE
9. CROSSWALKS ARE 10' WIDE
10. STOP BAR 4' BEHIND CROSS WALK BARS & PARALLEL TO CROSSWALK
11. USE "ZEBRA" CROSSWALKS USING MULTIPLE 2'X10' BARS PLACED ON LANES LINES AND BETWEEN LANE LINES, ALL DIRECTIONS
12. TYPE III TRAFFIC BARRICADE (PERMANENT) 2'x10' BARS PLACED ON LANE LINES AND ON CENTER OF EACH LANE.
13. PAINT MEDIAN NOSE YELLOW.

NOTE: SEE SHEET 12 OF 25 FOR TYPICAL SECTIONS

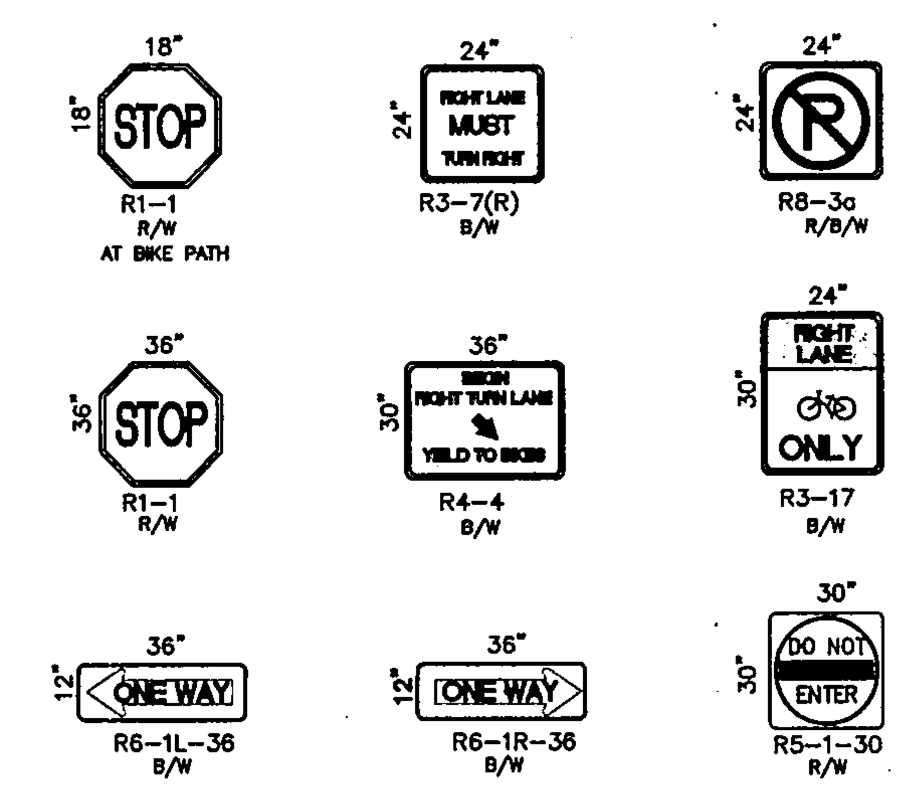

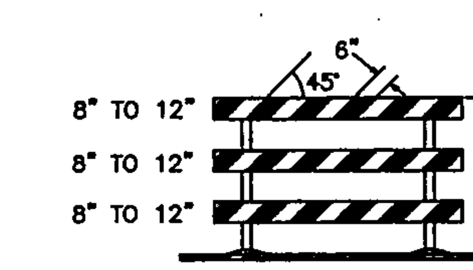

TYPE III BARRICADE

Figure 9B-1. Sign Placement on Shared-Use Paths

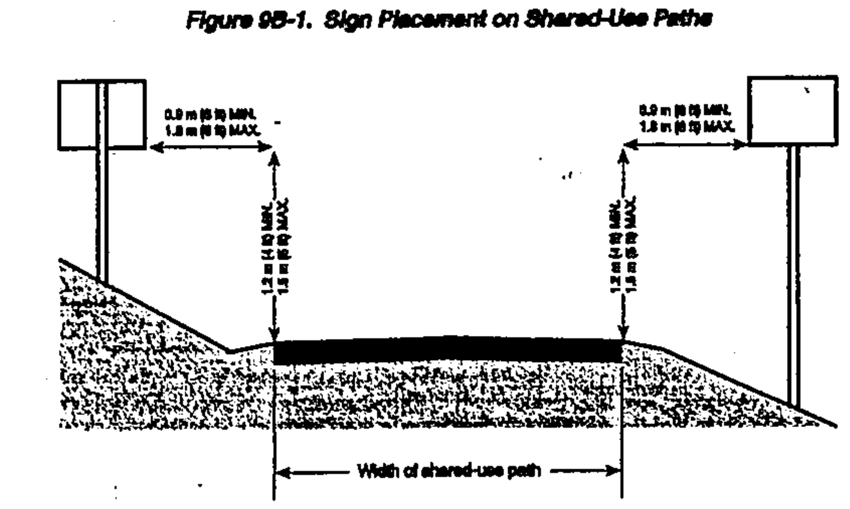

SIGN LOCATION ~ BICYCLE FACILITIES

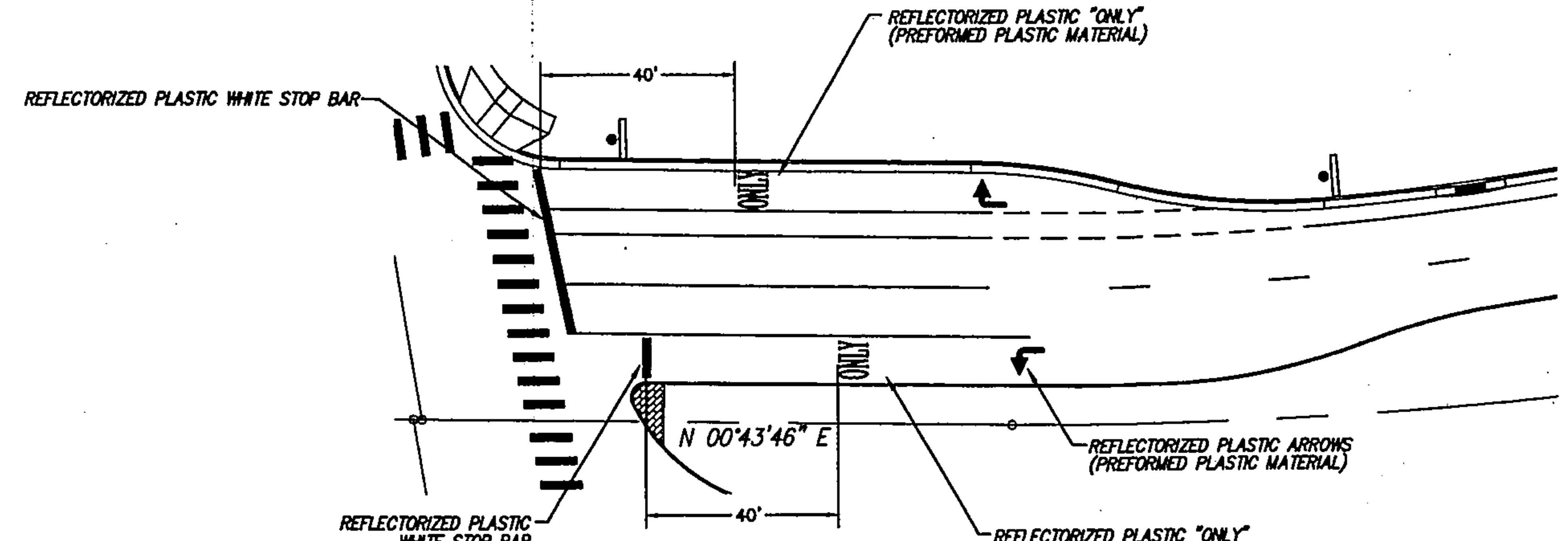

TURN BAY STRIPING DETAIL

SCALE: 1" = 30'

AS BUILT INFORMATION	
CONTRACTOR	
WORK STAKED BY Cartesian Surveys Inc.	DATE 2008
INSPECTOR'S ACCEPTANCE BY	DATE
FIELD VERIFICATION BY Cartesian Surveys Inc.	DATE 2008
DRAWINGS CORRECTED BY	DATE
MICRO-FILM INFORMATION	
RECORDED BY	DATE
NO.	

BENCH MARKS

SURVEY INFORMATION		
FIELD NOTES		
NO.	BY	DATE

ENGINEER'S SEAL

JAMES D. HUGHES, NEW MEXICO REGISTERED PROFESSIONAL ENGINEER 5-21-21

NO.	DATE	REMARKS	BY
		REVISIONS	
		DESIGN	
DESIGNED BY	JDH	DATE	5/05
DRAWN BY	RDQ TAS	DATE	10/05
CHECKED BY	DMG	DATE	12/05

dmg MARK GOODWIN & ASSOCIATES, P.A. CONSULTING ENGINEERS
P.O. BOX 90606
ALBUQUERQUE, NEW MEXICO 87199
(505) 828-2200, FAX (505) 797-9539

CITY OF ALBUQUERQUE
PUBLIC WORKS DEPARTMENT

TITLE: AMOLE CHANNEL - PHASE III
86TH ST. & DE ANZA DR.
98TH STREET S.W. STRIPING PLAN

DESIGN REVIEW COMMITTEE	CITY ENGINEER APPROVAL	MO./DAY/YR.	MO./DAY/YR.
APPROVED JAN - 9 2006 DESIGN REVIEW COMMITTEE	APPROVED JAN - 9 [illegible] CITY ENGINEER	LAST DESIGN UPDATE	

CITY PROJECT NO.	ZONE MAP NO.	SHEET OF
756291	N-9	10 25

A04Jobs\A4009SNH\Amole Channel Plans 2\98th Snow Vista Phase3\SH-10-4009-98X-SS1 12-12-05 TAS RDQ

HDR ENGINEERING INC.
Tim Auld 16678 4-13-2007
Engineers Name NMPE No. Date

RECORD DRAWINGS

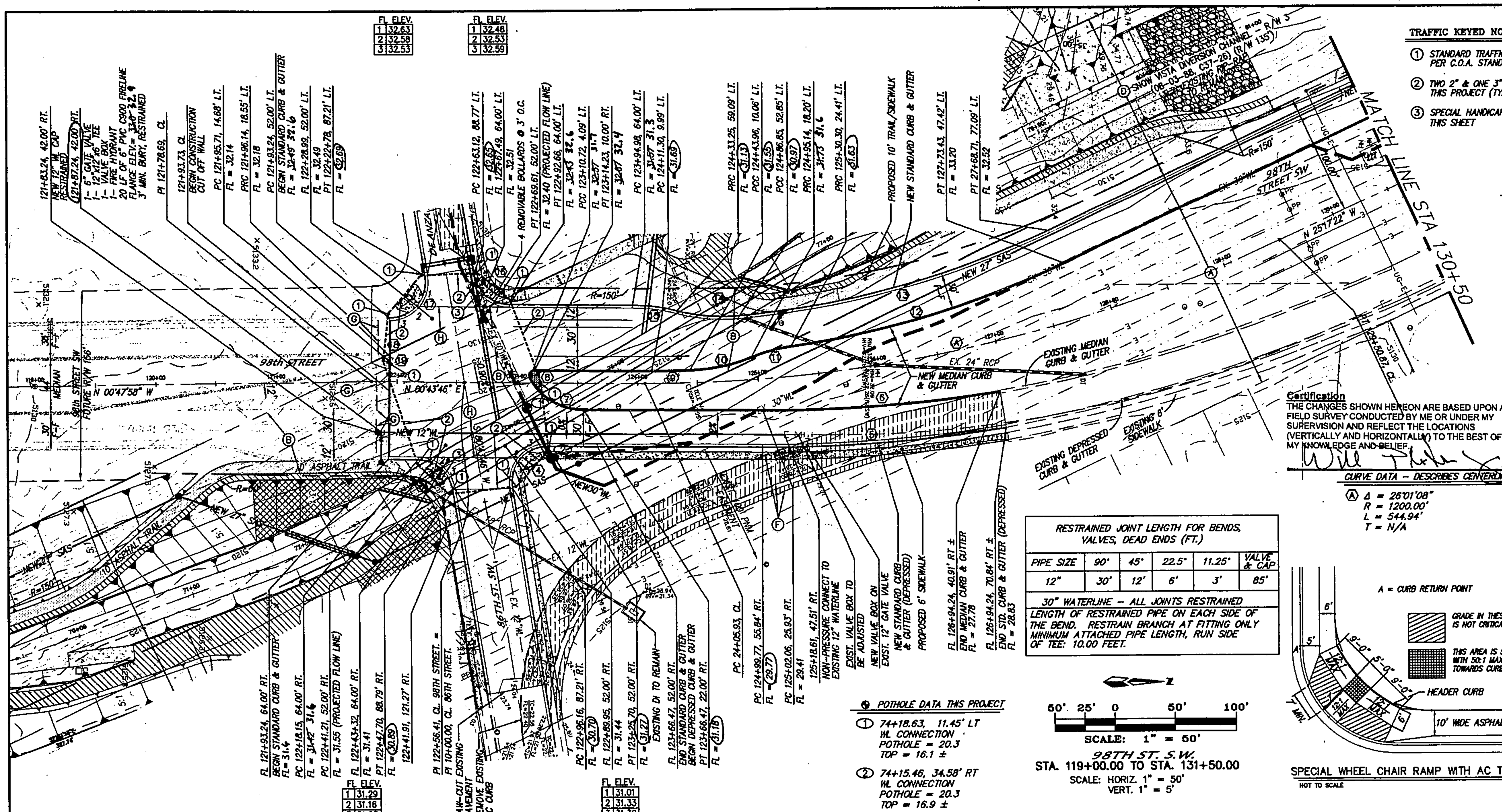

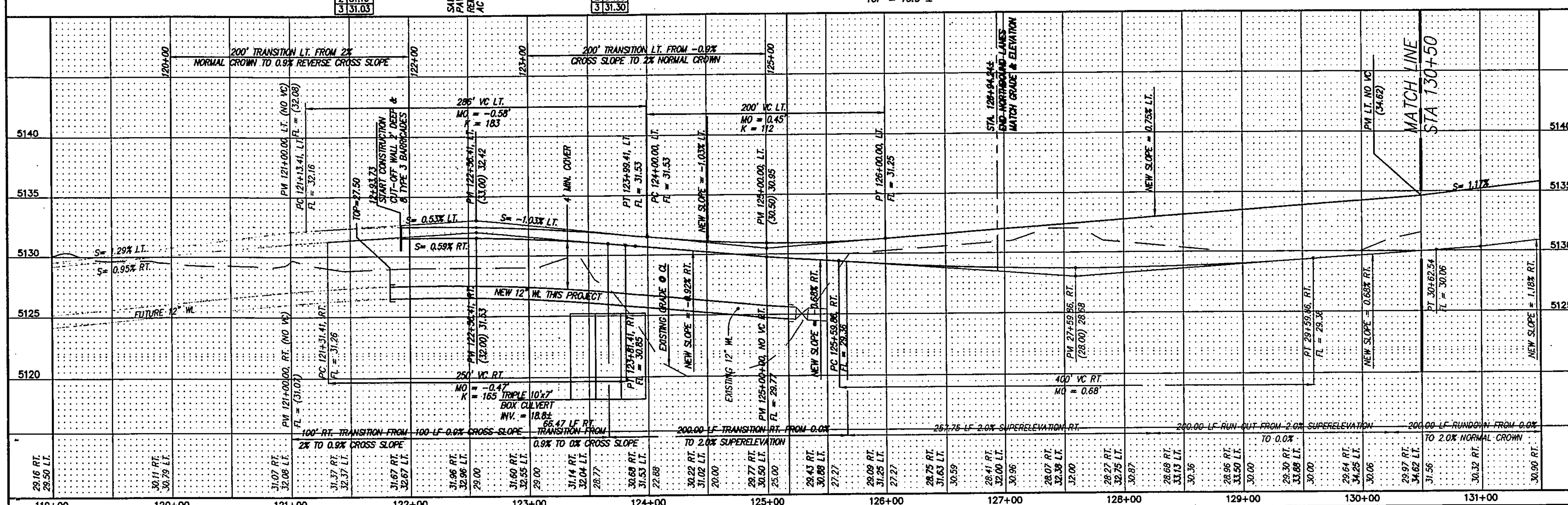

TRAFFIC KEYED NOTES:

1. STANDARD TRAFFIC SIGNAL PULL BOX PER C.O.A. STANDARD DWG #2250.
2. TWO 2" & ONE 3" CONDUITS THIS PROJECT (TYPICAL).
3. SPECIAL HANDICAP RAMP PER DETAIL THIS SHEET

NOTES

1. ALL STATIONING IS CENTERLINE STATIONING.
2. ALL HANDICAP RAMPS TO BE CASE I PER CITY OF ALBUQUERQUE STD DWG 2441, UNLESS OTHERWISE INDICATED. WHERE GRADES DO NOT PERMIT A MAXIMUM SLOPE OF 12:1 TO BE MAINTAINED WITHIN THE 7' LENGTH AS SPECIFIED THE "F" LENGTH AS SHOWN IN DWG 2441 SHALL BE INCREASED TO MAINTAIN A SLOPE, 12:1.
3. ALL EXCAVATION, TRENCHING AND SHORING ACTIVITIES MUST BE CARRIED-OUT IN ACCORDANCE WITH OSHA 29 CFR 1926.650 SUBPART P.

CURVE DATA – DESCRIBES FACE OF CURB

(1) Δ = 16°15'37" R = 150.00' L = 42.57' T = 21.43'	(2) Δ = 16°15'37" R = 150.00' L = 42.57' T = 21.43'	(3) Δ = 80°00'00" R = 30.00' L = 41.89' T = 25.17'	(4) Δ = 100°00'00" R = 30.00' L = 52.36' T = 35.75'
(5) Δ = 09°42'07" R = 1200.00' L = 203.20' T = 101.84'	(6) Δ = 09°42'07" R = 1170.00' L = 198.12' T = 99.30'	(7) Δ = 61°25'41" R = 50.00' L = 53.61' T = 29.70'	(8) Δ = 118°34'19" R = 4.00' L = 8.28' T = 6.73'
(9) Δ = 02°20'34" R = 792.00' L = 32.38' T = 16.19'	(10) Δ = 19°39'50" R = 150.00' L = 51.48' T = 26.00'	(11) Δ = 13°25'56" R = 150.00' L = 35.17' T = 17.66'	(12) Δ = 17°26'40" R = 780.00' L = 237.48' T = 119.67'
(13) Δ = 20°30'45" R = 750.00' L = 268.51' T = 135.71'	(14) Δ = 19°45'25" R = 150.00' L = 51.72' T = 26.12'	(15) Δ = 14°15'02" R = 150.00' L = 37.31' T = 18.75'	(16) Δ = 80°00'00" R = 30.00' L = 41.89' T = 25.17'
(17) Δ = 100°00'00" R = 30.00' L = 52.36' T = 35.75'	(18) Δ = 22°45'42" R = 50.00' L = 19.86' T = 10.06'	(19) Δ = 149°35'02" R = 2.00' L = 5.22' T = 7.36'	

Certification
THE CHANGES SHOWN HEREON ARE BASED UPON A FIELD SURVEY CONDUCTED BY ME OR UNDER MY SUPERVISION AND REFLECT THE LOCATIONS (VERTICALLY AND HORIZONTALLY) TO THE BEST OF MY KNOWLEDGE AND BELIEF.

CURVE DATA – DESCRIBES CENTERLINE

(A) Δ = 26°01'08" R = 1200.00' L = 544.94' T = N/A

RESTRAINED JOINT LENGTH FOR BENDS, VALVES, DEAD ENDS (FT.)					
PIPE SIZE	90°	45°	22.5°	11.25°	VALVE & CAP
12"	30'	12'	6'	3'	85'

30" WATERLINE – ALL JOINTS RESTRAINED
LENGTH OF RESTRAINED PIPE ON EACH SIDE OF THE BEND. RESTRAIN BRANCH AT FITTING ONLY MINIMUM ATTACHED PIPE LENGTH, RUN SIDE OF TEE: 10.00 FEET.

POTHOLE DATA THIS PROJECT

1. 74+18.63, 11.45' LT W. CONNECTION POTHOLE = 20.3 TOP = 16.1 ±
2. 74+15.46, 34.58' RT W. CONNECTION POTHOLE = 20.3 TOP = 16.9 ±

SCALE: 1" = 50'
98TH ST. S.W.
STA. 119+00.00 TO STA. 131+50.00
SCALE: HORIZ. 1" = 50' VERT. 1" = 5'

A = CURB RETURN POINT
GRADE IN THESE AREAS IS NOT CRITICAL
THIS AREA IS 5' x 5' WITH 50:1 MAX. SLOPE TOWARDS CURB
HEADER CURB
10' WIDE ASPHALT TRAIL

SPECIAL WHEEL CHAIR RAMP WITH AC TRAIL
NOT TO SCALE

LEGEND:

- TINTED BRICK PATTERN CONCRETE MEDIAN PAVEMENT COA STD DWG 2408
- MAINTENANCE ROAD ASPHALT 15' WIDE COA STD DWG 2415B
- ASPHALT TRAIL 10' WIDE, 2" THICK COA STD DWG 2415B
- NATIVE SEED & GRAVEL MULCH SLOPE AREA ALONG TRAIL 3:1 OR STEEPER
- PAVED SECTION TO BE REMOVED
- RIP-RAP TO BE REMOVED / REUSED
- RIP-RAP TO BE PLACED
- NEW CONCRETE THIS PROJECT
- EXIST 10' WIDE A.C. TRAIL
- RETAINING WALL W/RAILING PER DETAILS SHEETS 7, 8 & 9

KEYED NOTES:

- (A) EXISTING 200' CITY OF ALBUQUERQUE RIGHT OF WAY
- (B) EXISTING AMAFCA RIGHT OF WAY TO BE QUIT CLAIMED TO THE CITY OF ALBUQUERQUE.
- (C) EXISTING 150' CITY OF ALBUQUERQUE RIGHT OF WAY TO BE VACATED & DEDICATED TO AMAFCA.
- (D) EXISTING 135' WIDE RIGHT OF WAY (SNOW VISTA DIVERSION CHANNEL).
- (E) EXISTING AC CURB & AC PAVEMENT TO BE REMOVED & DISPOSED
- (F) EXISTING AC CURB, AC PAVEMENT & AC TRAIL TO BE REMOVED & DISPOSED
- (G) TYPE III BARRICADES
- (H) TRANSITION 6" TO 8" ASPHALTIC CONCRETE

PROFILE LEGEND:

- CURB FL
- MEDIAN FL
- RT PROFILE

AS BUILT INFORMATION		
CONTRACTOR		
WORK STAKED BY	Cartesian Surveys Inc.	DATE 2006
INSPECTOR'S ACCEPTANCE BY		DATE
FIELD VERIFICATION BY	Cartesian Surveys Inc.	DATE 2006
DRAWINGS CORRECTED BY		DATE

MICRO–FILM INFORMATION
RECORDED BY | DATE | NO.

BENCH MARKS
STATION "TRANS" IS LOCATED 6 MI. SOUTHEAST OF DOWNTOWN ALBUQUERQUE, IN THE R.O.W. OF A PLAINS ELECTRIC CO-OP TRANSMISSION LINE. TO REACH STATION FROM INTERSECTION OF CENTRAL AVE. & 98TH ST. SW, GO SOUTH ON 98TH ST. 1.2 MI. TO JUNCTION WITH GIBSON BLVD. & SNOW VISTA BLVD., THEN SOUTHEAST ALONG SNOW VISTA AND CO-OP ELECTRIC TRANSMISSION LINE 0.85 MI. TO PYLON NUMBERED "52". STATION IS JUST EAST OF THIS POINT.
X = 354,899.45, Y = 1,471,822.67, ELEV. = 5118.37 (NAVD88)

SURVEY INFORMATION — FIELD NOTES — NO. | BY | DATE

ENGINEER'S SEAL — JAMES D. HUGHES, NEW MEXICO, REGISTERED PROFESSIONAL ENGINEER 12-13-05

NO.	DATE	REMARKS	BY
		REVISIONS	
		DESIGN	

DESIGNED BY	G/K	DATE	02/00
DRAWN BY	ACH, WLV	DATE	02/00
CHECKED BY	DMG	DATE	02/00

dmg MARK GOODWIN & ASSOCIATES, P.A. CONSULTING ENGINEERS
P.O. BOX 90606
ALBUQUERQUE, NEW MEXICO 87199
(505) 828-2200, FAX (505) 797-9539

ALBUQUERQUE METROPOLITAN ARROYO FLOOD CONTROL AUTHORITY

TITLE: AMOLE CHANNEL - PHASE III
98TH STREET S.W.
PAVING & UTILITY IMPROVEMENTS

DESIGN REVIEW COMMITTEE — APPROVED JAN - 9 2006 — DESIGN REVIEW COMMITTEE
CITY ENGINEER — APPROVED JAN - 9 2006
LAST DESIGN UPDATE | MO./DAY/YR. | MO./DAY/YR.

CITY PROJECT NO.	ZONE MAP NO.	SHEET	OF
756291	N-9	11	25

A4009SNH/Amole Channel plans 2/98th Snow Vista Phase3/98th Snow Vista PP11 11-30-05 NHE DER TAS RDQ

F:\A4009\A4009SNH\Amole Channel plans 2\98th Snow Vista Phase3\98th Snow Vista PP11.dwg, 12/14/2005 3:05:54 PM, PLOTTED BY RDQ

DRAWINGS
HDR ENGINEERING INC.
16678 4-13-2007
Engineers Name NMPE No. Date

RECORD DRAWINGS

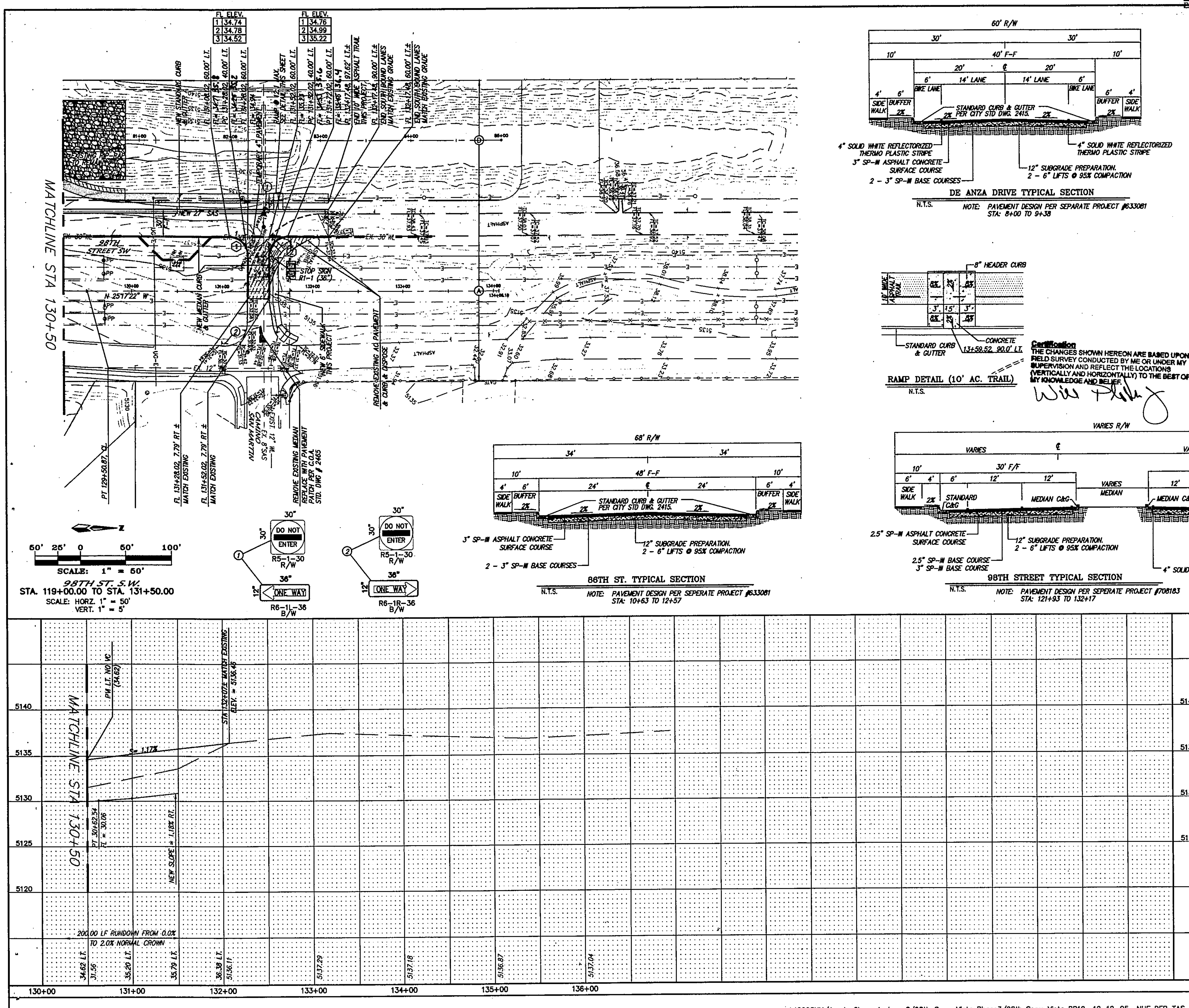

NOTES

1. ALL STATIONING IS CENTERLINE STATIONING.
2. ALL HANDICAP RAMPS TO BE CASE I PER CITY OF ALBUQUERQUE STD. DWG. 2441, UNLESS OTHERWISE INDICATED. WHERE GRADES DO NOT PERMIT A MAXIMUM SLOPE OF 12:1 TO BE MAINTAINED WITHIN THE 7' LENGTH AS SPECIFIED THE 7' LENGTH AS SHOWN IN DWG. 2441 SHALL BE INCREASED TO MAINTAIN A SLOPE, 12:1.
3. ALL EXCAVATION, TRENCHING AND SHORING ACTIVITIES MUST BE CARRIED-OUT IN ACCORDANCE WITH OSHA 29 CFR 1926.650 SUBPART P.

CURVE DATA – DESCRIBES FACE OF NEW CURB

① L=31.42 R=20.00 Δ=90°00'00" Tan=20.00	② L=31.42 R=20.00 Δ=90°00'00" Tan=20.00

LEGEND:

- TINTED BRICK PATTERN CONCRETE MEDIAN PAVEMENT COA STD DWG 2408
- MAINTENANCE ROAD ASPHALT 15' WIDE COA STD DWG 2415B
- ASPHALT TRAIL 10' WIDE, 2" THICK COA STD DWG 2415B
- TEMPORARY ASPHALT, 5" THICK A.C. COA STD DWG 2415B
- PAVED SECTION TO BE REMOVED
- RIP-RAP TO BE REMOVED / REUSED
- RIP-RAP TO BE PLACED
- NEW CONCRETE THIS PROJECT
- EXIST 10' WIDE A.C. TRAIL
- RETAINING WALL W/RAILING PER DETAILS SHEETS 7, 8 & 9

KEYED NOTES:

- Ⓐ EXISTING 200' CITY OF ALBUQUERQUE RIGHT OF WAY
- Ⓑ EXISTING AMAFCA RIGHT OF WAY TO BE QUIT CLAIMED TO THE CITY OF ALBUQUERQUE.
- Ⓒ EXISTING 150' CITY OF ALBUQUERQUE RIGHT OF WAY TO BE VACATED & DEDICATED TO AMAFCA.
- Ⓓ EXISTING 135' WIDE RIGHT OF WAY (SNOW VISTA DIVERSION CHANNEL).
- Ⓔ EXISTING AC CURB & AC PAVEMENT TO BE REMOVED & DISPOSED
- Ⓕ EXISTING AC CURB, AC PAVEMENT & AC TRAIL TO BE REMOVED & DISPOSED
- Ⓖ TYPE III BARRICADES

PROFILE LEGEND

- CURB FL
- MEDIAN FL
- RT PROFILE

AS BUILT INFORMATION

CONTRACTOR
WORK STAKED BY Carlsbad Surveys Inc. DATE 2008
INSPECTOR'S ACCEPTANCE BY DATE
FIELD VERIFICATION BY Carlsbad Surveys Inc. DATE 2008
DRAWINGS CORRECTED BY DATE

MICRO-FILM INFORMATION

RECORDED BY DATE
NO.

BENCH MARKS

STATION "TRANS" IS LOCATED 6 MI. SOUTHWEST OF DOWNTOWN ALBUQUERQUE, IN THE R.O.W. OF A PLAINS ELECTRIC CO-OP TRANSMISSION LINE. TO REACH STATION FROM INTERSECTION OF CENTRAL AVE. & 98TH ST. SW, GO SOUTH ON 98TH ST. 1.2 MI. TO JUNCTION WITH GIBSON BLVD. & SNOW VISTA BLVD. THEN SOUTHEAST ALONG SNOW VISTA AND CO-OP ELECTRIC TRANSMISSION LINE 0.85 MI. TO PYLON NUMBERED "52". STATION IS JUST EAST OF THIS POINT.
X = 354,899.45, Y = 1,471,822.67, ELEV. = 5118.37 (NAVD29)

SURVEY INFORMATION

NO.	BY	DATE

FIELD NOTES

ENGINEER'S SEAL
5-12-05

NO.	DATE	REMARKS	BY

REVISIONS

DESIGN

DESIGNED BY	GJK	DATE	02/00
DRAWN BY	ACH, WLV	DATE	02/00
CHECKED BY	DMG	DATE	02/00

dmg MARK GOODWIN & ASSOCIATES, P.A.
CONSULTING ENGINEERS
P.O. BOX 90606
ALBUQUERQUE, NEW MEXICO 87199
(505) 828-2200, FAX (505) 797-9539

ALBUQUERQUE METROPOLITAN
ARROYO FLOOD CONTROL AUTHORITY

TITLE: AMOLE CHANNEL - PHASE III
98TH STREET S.W.
PAVING IMPROVEMENTS

DESIGN REVIEW COMMITTEE — APPROVED JAN - 9 2006
CITY ENGINEER APPROVAL — APPROVED JAN - 9 2006
LAST DESIGN UPDATE
MO./DAY/YR. MO./DAY/YR.

CITY PROJECT NO. 756291
ZONE MAP NO. N-9
SHEET 12 OF 25

A4009SNH/Amole Channel plans 2/98th Snow Vista Phase3/98th Snow Vista PP12 12-12-05 NHE DER TAS RDQ

RECORD DRAWINGS

HDR ENGINEERING INC.
16678 4-13-2007
Engineer Name NMPE No. Date

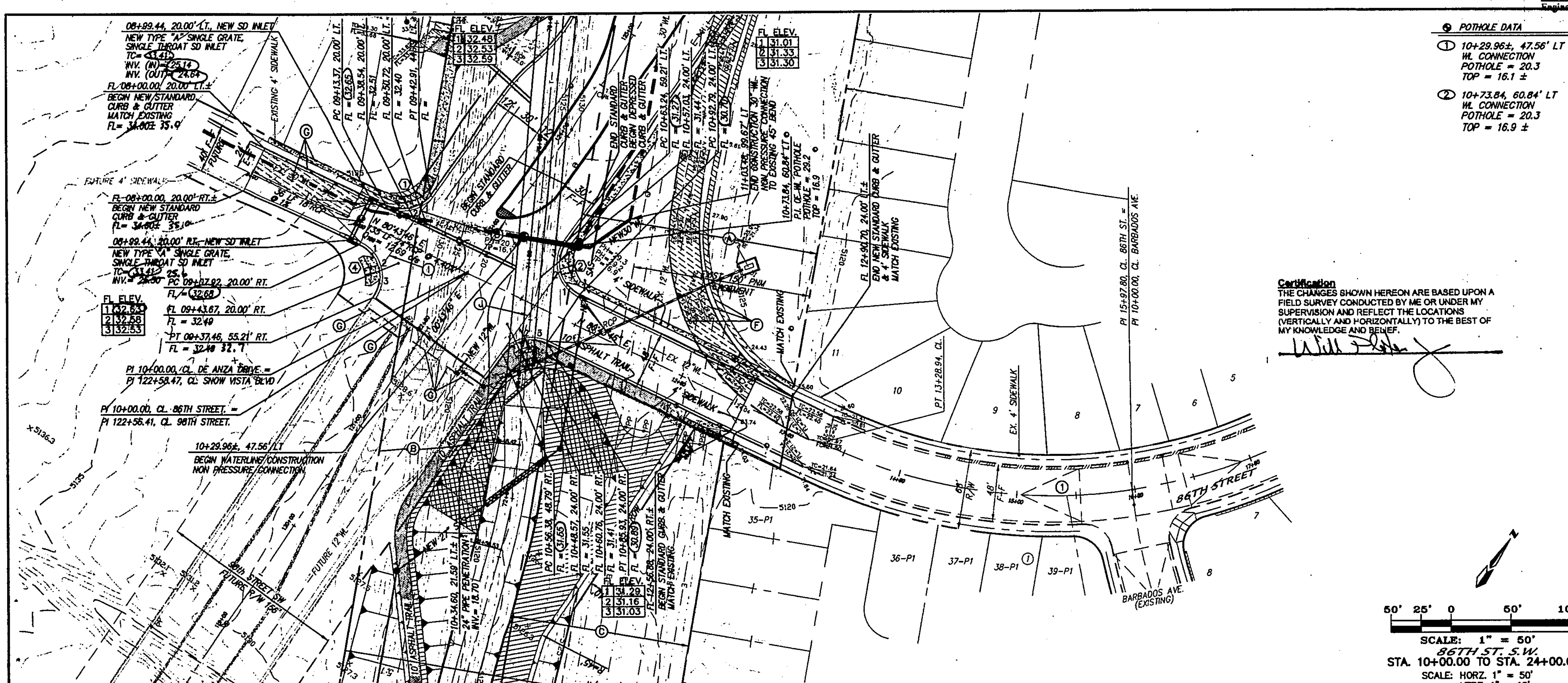

POTHOLE DATA

1. 10+29.96±, 47.56' LT WL CONNECTION POTHOLE = 20.3 TOP = 16.1 ±
2. 10+73.84, 60.84' LT WL CONNECTION POTHOLE = 20.3 TOP = 16.9 ±

Certification
THE CHANGES SHOWN HEREON ARE BASED UPON A FIELD SURVEY CONDUCTED BY ME OR UNDER MY SUPERVISION AND REFLECT THE LOCATIONS (VERTICALLY AND HORIZONTALLY) TO THE BEST OF MY KNOWLEDGE AND BELIEF.

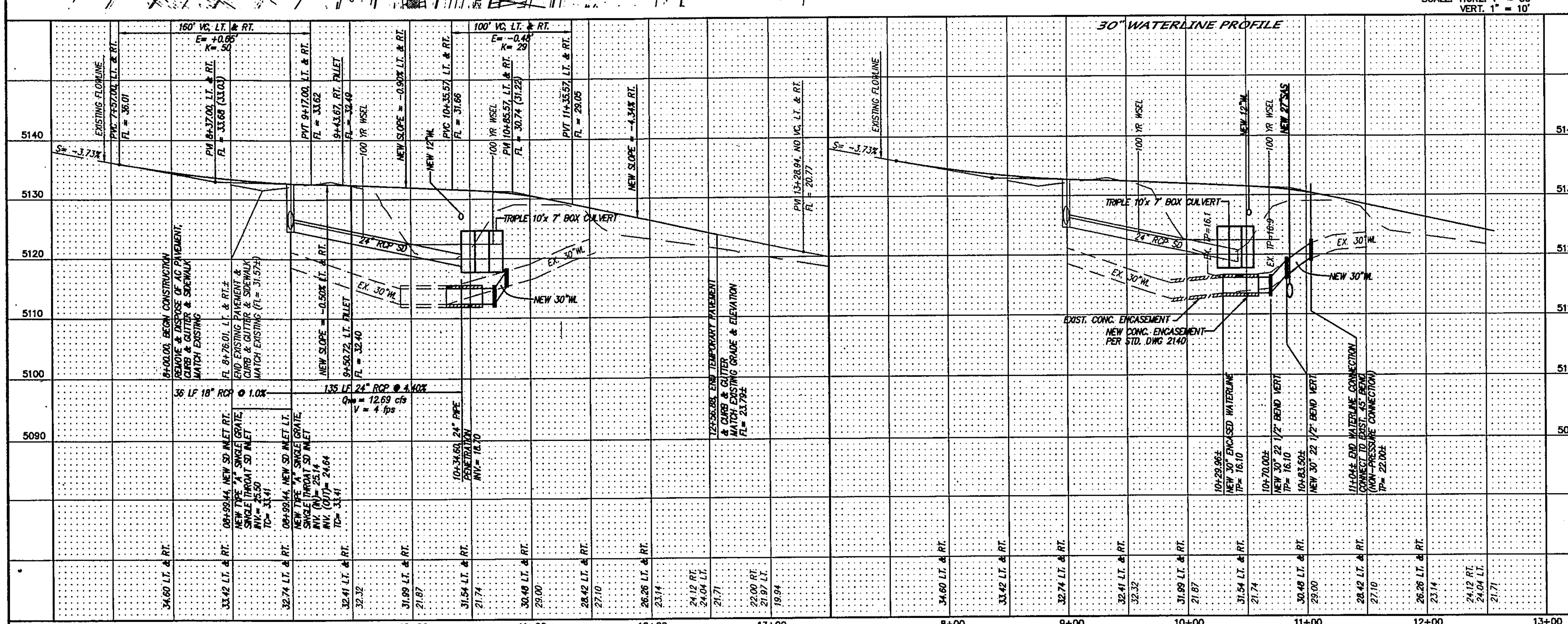

NOTES

1. ALL STATIONING IS CENTERLINE STATIONING.
2. ALL HANDICAP RAMPS TO BE CASE I PER CITY OF ALBUQUERQUE STD. DWG. 2441, UNLESS OTHERWISE INDICATED. WHERE GRADES DO NOT PERMIT A MAXIMUM SLOPE OF 12:1 TO BE MAINTAINED WITHIN THE 7' LENGTH AS SPECIFIED THE THE "F" LENGTH AS SHOWN IN DWG. 2441 SHALL BE INCREASED TO MAINTAIN A SLOPE, 12:1.

CURVE DATA – DESCRIBES FACE OF CURB

1. Δ = 80°00'00" R = 30.00' L = 41.89' T = 25.17'
2. Δ = 100°00'00" R = 30.00' L = 52.36' T = 35.75'
3. Δ = 80°00'00" R = 30.00' L = 41.89' T = 25.17'
4. Δ = 100°00'00" R = 30.00' L = 52.36' T = 35.75'

CURVE DATA – DESCRIBES CENTERLINE

1. Δ = 67°27'50" R = 450.00' L = 529.86' T = N/A

KEYED NOTES:

- (A) EXISTING 200' CITY OF ALBUQUERQUE RIGHT OF WAY
- (B) EXISTING AMAFCA RIGHT OF WAY TO BE QUIT CLAIMED TO THE CITY OF ALBUQUERQUE.
- (C) EXISTING 150' CITY OF ALBUQUERQUE RIGHT OF WAY TO BE VACATED & DEDICATED TO AMAFCA.
- (F) EXISTING AC CURB, AC PAVEMENT & AC TRAIL TO BE REMOVED & DISPOSED
- (G) REMOVE & DISPOSE OF EXISTING CURB & GUTTER PAVEMENT, & SIDEWALK.
- (H) TYPE III BARRICADES
- (I) TRANSITION FROM 6" TO 8" THICK ASPHALT PAVEMENT STA: 9+38.00
- (J) TRANSITION FROM 8" TO 6" THICK ASPHALT PAVEMENT STA: 10+63.00

AS BUILT INFORMATION		
CONTRACTOR		
WORK STAKED BY	Cartesian Surveys Inc.	DATE 7/08
INSPECTOR'S ACCEPTANCE BY		DATE
FIELD VERIFICATION BY	Cartesian Surveys Inc.	DATE 7/08
DRAWINGS CORRECTED BY		DATE

MICRO-FILM INFORMATION	
RECORDED BY	DATE
NO.	

BENCH MARKS

STATION "TRANS" IS LOCATED 6 MI. SOUTHWEST OF DOWNTOWN ALBUQUERQUE, IN THE R.O.W. OF A PLAINS ELECTRIC CO-OP TRANSMISSION LINE. TO REACH STATION FROM INTERSECTION OF CENTRAL AVE. & 98TH ST. SW, GO SOUTH ON 98TH ST. 1.2 MI. TO JUNCTION WITH GIBSON BLVD. & SNOW VISTA BLVD., THEN SOUTHEAST ALONG SNOW VISTA AND CO-OP ELECTRIC TRANSMISSION LINE 0.85 MI. TO PYLON NUMBERED "52". STATION IS JUST EAST OF THIS POINT. X = 354,899.45, Y = 1,471,822.67, ELEV. = 5118.37 (NAVD29)

SURVEY INFORMATION		
FIELD NOTES		
NO.	BY	DATE

ENGINEER'S SEAL
12-13-05

NO.	DATE	REMARKS	BY

REVISIONS

DESIGN			
DESIGNED BY	GJK	DATE	02/00
DRAWN BY	ACH	DATE	02/00
CHECKED BY	DMG	DATE	02/00

dmg MARK GOODWIN & ASSOCIATES, P.A.
CONSULTING ENGINEERS
P.O. BOX 90606
ALBUQUERQUE, NEW MEXICO 87199
(505) 828-2200, FAX (505) 797-9539

ALBUQUERQUE METROPOLITAN
ARROYO FLOOD CONTROL AUTHORITY

TITLE: AMOLE CHANNEL - PHASE III
86th STREET SW / 98th STREET SW
PAVING & UTILITY IMPROVEMENTS

DESIGN REVIEW COMMITTEE	CITY ENGINEER APPROVAL	MO./DAY/YR.	MO./DAY/YR.
APPROVED JAN - 9 2006 DESIGN REVIEW COMMITTEE	APPROVED JAN - 9 2006 CITY ENGINEER		

LAST DESIGN UPDATE

CITY PROJECT NO.	ZONE MAP NO.	SHEET	OF
756291	N-9	13	25

A04JOBS\A4009SNH\Amole Channel Plans 2\98th Snow Vista Phase3\SH-13-86TH98X-PP 11-18-05 NHE DER TAS RDQ

RECORD DRAWINGS
HDR ENGINEERING INC.
Tim [signature] 16678 4-13-2007
Engineer's Name NMPE No. Date

RECORD DRAWINGS

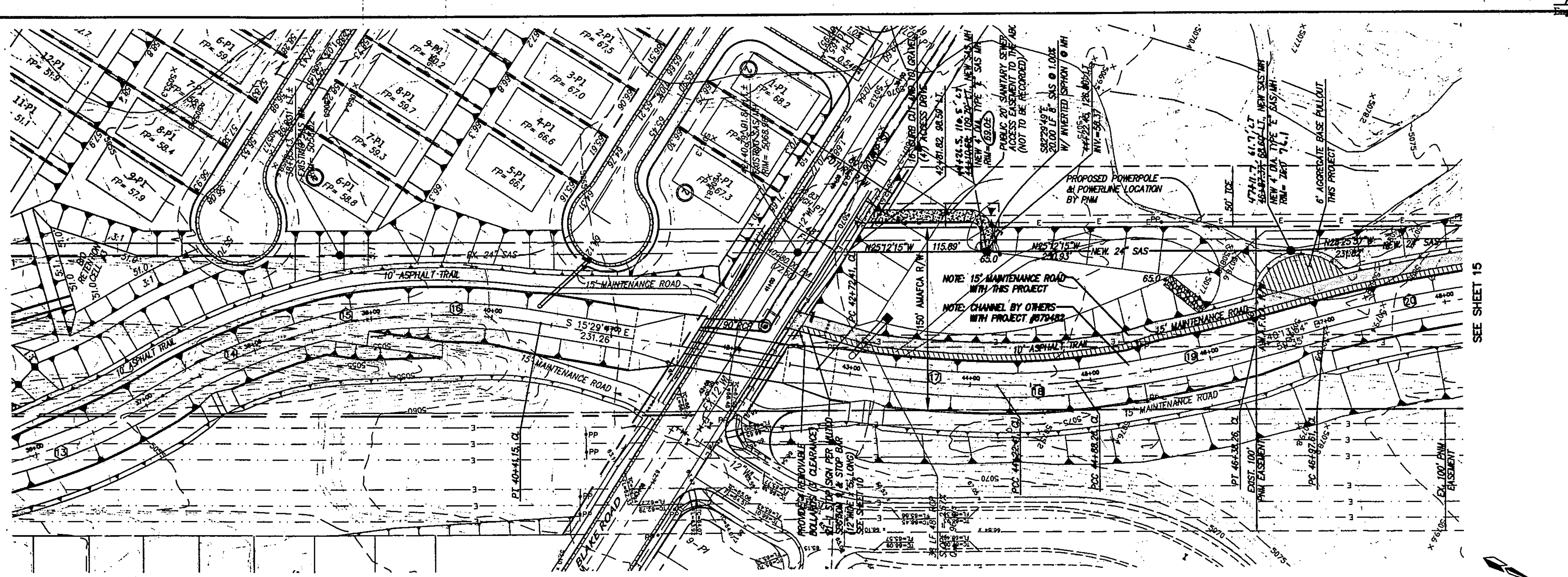

50' 25' 0 50' 100'
SCALE: 1" = 50'

AMOLE CHANNEL
STA. 35+00.00 TO STA. 47+00.00
SCALE: HORZ. 1" = 50'
VERT. 1" = 10'

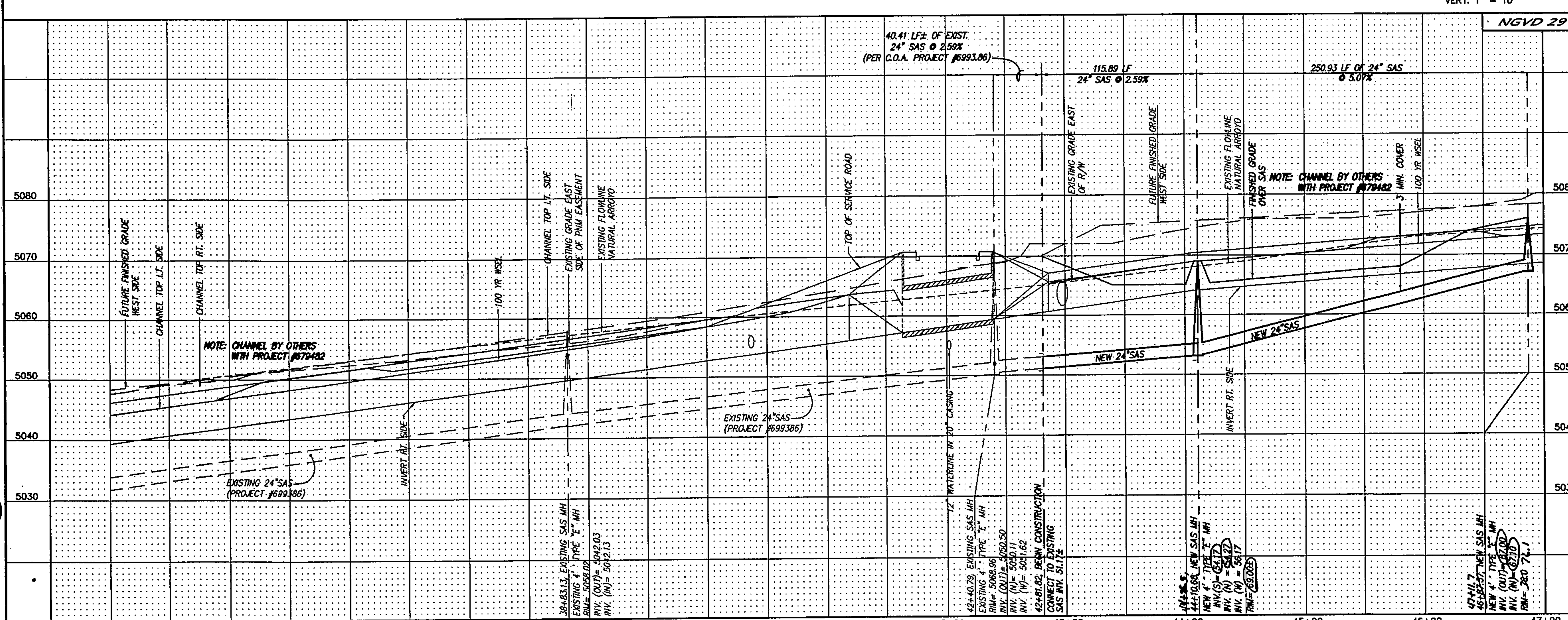

N O T E S

CURVE DATA – CENTERLINE OF CHANNEL

Curve	Δ	R	T	L
13	17°16'56"	500.00'	75.98'	150.82'
14	17°11'19"	500.00'	75.57'	150.00'
15	7°09'12"	250.00'	15.63'	31.21'
16	16°33'26"	500.00'	72.75'	144.49'
17	8°35'40"	1000.00'	75.14'	150.00'
18	7°32'48"	500.00'	32.98'	65.86'
19	8°35'40"	1000.00'	75.14'	150.00'

Certification
THE CHANGES SHOWN HEREON ARE BASED UPON A FIELD SURVEY CONDUCTED BY ME OR UNDER MY SUPERVISION AND REFLECT THE LOCATIONS (VERTICALLY AND HORIZONTALLY) TO THE BEST OF MY KNOWLEDGE AND BELIEF.
[signature]

AS BUILT INFORMATION
CONTRACTOR
WORK STAKED BY Cartesian Surveys Inc. DATE 2008
INSPECTOR'S ACCEPTANCE BY DATE 2008
FIELD VERIFICATION BY Cartesian Surveys Inc. DATE 2008
DRAWINGS CORRECTED BY DATE

MICRO–FILM INFORMATION
RECORDED BY DATE
NO.

BENCH MARKS
STATION "TRANS" IS LOCATED 6 MI. SOUTHWEST OF DOWNTOWN ALBUQUERQUE, IN THE R.O.W. OF A PLAINS ELECTRIC CO-OP TRANSMISSION LINE. TO REACH STATION FROM INTERSECTION OF CENTRAL AVE. & 98TH ST. SW, GO SOUTH ON 98TH ST. 1.2 MI. TO JUNCTION WITH GIBSON BLVD. & SNOW VISTA BLVD., THEN SOUTHEAST ALONG SNOW VISTA AND CO-OP ELECTRIC TRANSMISSION LINE 0.85 MI. TO PYLON NUMBERED "52". STATION IS JUST EAST OF THIS POINT.
X = 354,899.45, Y = 1,471,822.67, ELEV. = 5118.37
(NAD 1927/SLD 1929)

SURVEY INFORMATION
FIELD NOTES
NO. | BY | DATE

ENGINEER'S SEAL
[seal] 1-26-06

NO.	DATE	REMARKS	BY

REVISIONS

DESIGN			
DESIGNED BY	JDH	DATE	05/04
DRAWN BY	DER	DATE	05/04
CHECKED BY	DMG	DATE	05/04

dmg MARK GOODWIN & ASSOCIATES, P.A.
CONSULTING ENGINEERS
P.O. BOX 90606
ALBUQUERQUE, NEW MEXICO 87199
(505) 828-2200, FAX (505) 797-9539

ALBUQUERQUE METROPOLITAN
ARROYO FLOOD CONTROL AUTHORITY

TITLE: *AMOLE CHANNEL - PHASE III*
SANTITARY SEWER IMPROVEMENTS
PLAN AND PROFILE

DESIGN REVIEW COMMITTEE	CITY ENGINEER APPROVAL	MO./DAY/YR.	MO./DAY/YR.
FEB 2 2 2006	FEB 2 2 2006 CITY ENGINEER	LAST DESIGN UPDATE	

CITY PROJECT NO.	ZONE MAP NO.	SHEET	OF
756291	N-9	14	25

A04Jobs\A4009SNH\Amole Channel plans 2\98th Snow Vista Phase3\98X-SAS-UP1 01-25-06 DER NHE JCC TAS RDQ

RECORD DRAWINGS
HDR ENGINEERING INC.
Engineers Name — NMPE No. 16678 — Date 4-13-2007

RECORD DRAWINGS

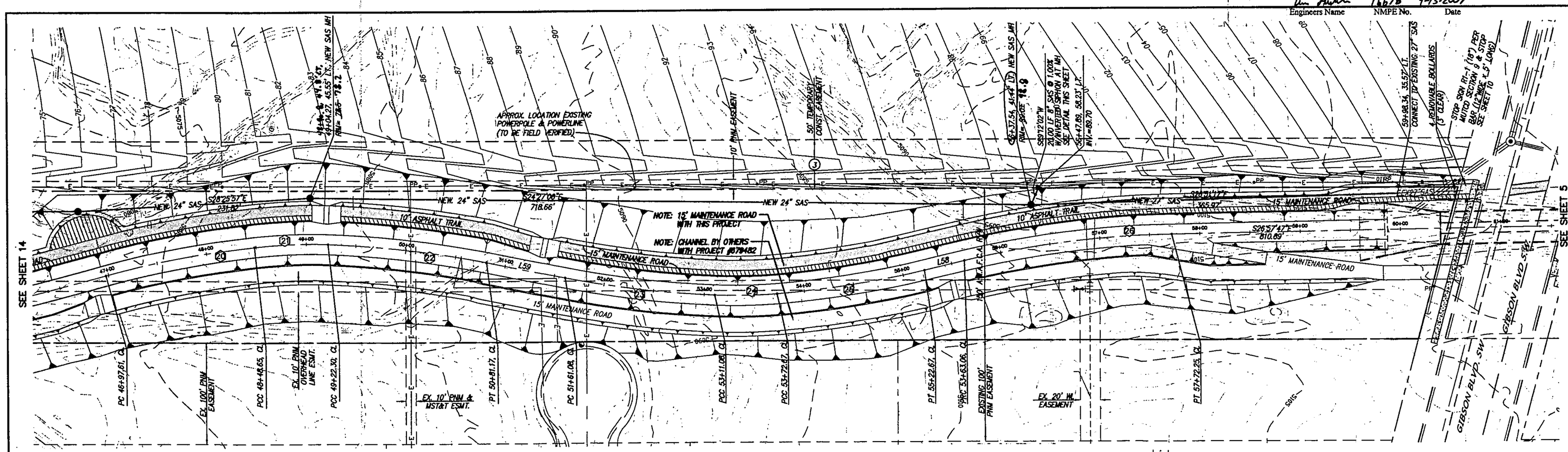

NOTES

1. STATIONING BASED ON CENTERLINE OF CHANNEL.

Certification
THE CHANGES SHOWN HEREON ARE BASED UPON A FIELD SURVEY CONDUCTED BY ME OR UNDER MY SUPERVISION AND REFLECT THE LOCATIONS (VERTICALLY AND HORIZONTALLY) TO THE BEST OF MY KNOWLEDGE AND BELIEF.

CURVE DATA – CENTERLINE OF CHANNEL

20	Δ = 8°39'14"	21	Δ = 8°26'23"	22	Δ = 9°06'09"	
	R = 1000.00'		R = 500.00'		R = 1000.00'	
	T = 75.66'		T = 36.89'		T = 79.60'	
	L = 151.04'		L = 73.65'		L = 158.87'	
23	Δ = 8°35'40"	24	Δ = 7°03'26"	25	Δ = 8°35'40"	26	Δ = 11°59'07"
	R = 1000.00'		R = 500.00'		R = 1000.00'		R = 1000.00'
	T = 75.14'		T = 30.83'		T = 75.14'		T = 104.97'
	L = 150.00'		L = 61.59'		L = 150.00'		L = 209.18'

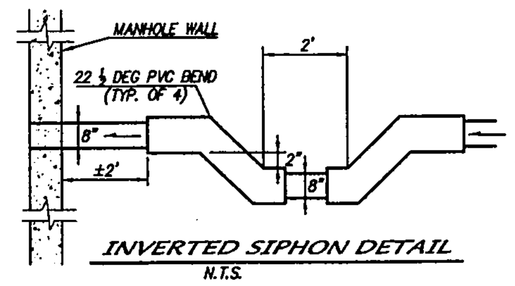

INVERTED SIPHON DETAIL
N.T.S.

SCALE: 1" = 50'
AMOLE CHANNEL
STA. 47+00.00 TO STA. 61+50.00
SCALE: HORZ. 1" = 50'
VERT. 1" = 10'

NGVD 29

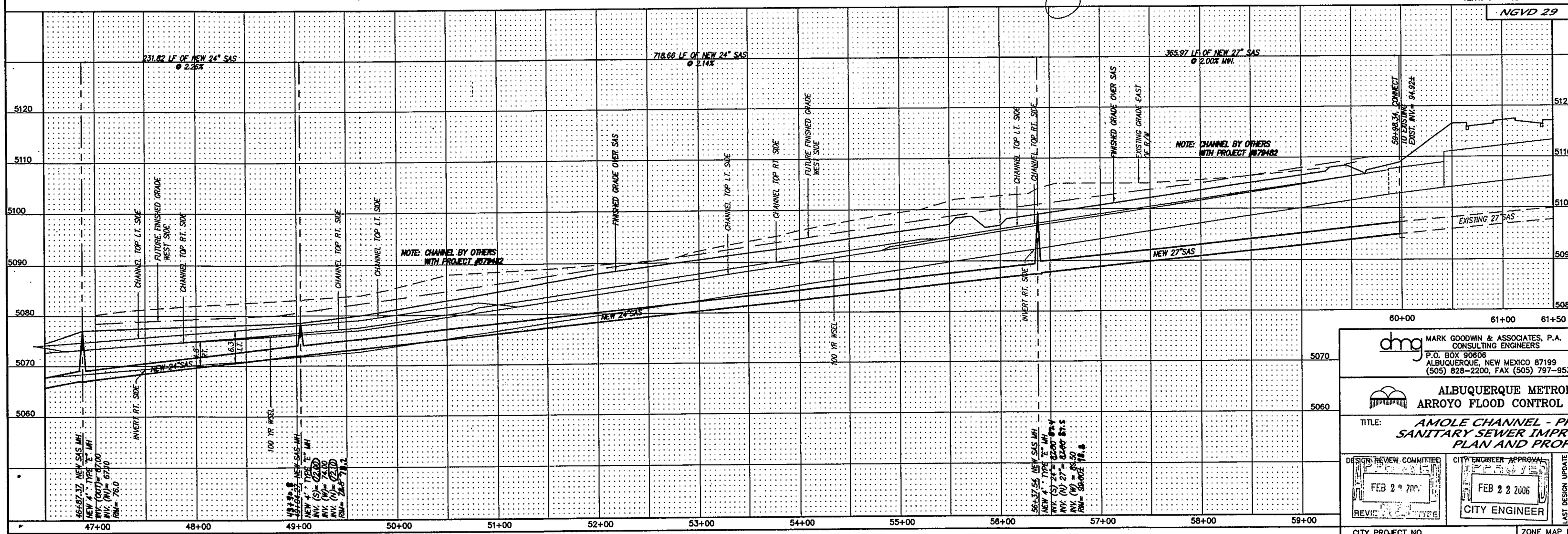

A04Jobs\A4009SNH\Amole Channel plans 2\98th Snow Vista Phase3\98X-SAS-UP2 01-25-06 DER NHE JCC TAS RDQ

AS BUILT INFORMATION
CONTRACTOR
WORK STAKED BY: Cartesian Surveys Inc. DATE: 2006
ASBUILT INSPECTION BY: DATE
FIELD VERIFICATION BY: Cartesian Surveys Inc. DATE: 2006
DRAWINGS CORRECTED BY: DATE
MICRO-FILM INFORMATION
RECORDED BY DATE
NO.

BENCH MARKS
STATION "TRANS" IS LOCATED 6 MI. SOUTHWEST OF DOWNTOWN ALBUQUERQUE, IN THE R.O.W. OF A PLAINS ELECTRIC CO-OP TRANSMISSION LINE. TO REACH STATION FROM INTERSECTION OF CENTRAL AVE. & 98TH ST. SW, GO SOUTH ON 98TH ST. 1.2 MI. TO JUNCTION WITH GIBSON BLVD. & SNOW VISTA BLVD., THEN SOUTHEAST ALONG SNOW VISTA AND CO-OP ELECTRIC TRANSMISSION LINE 0.85 MI. TO PYLON NUMBERED "52". STATION IS JUST EAST OF THIS POINT.
X = 354,899.45, Y = 1,471,822.67, ELEV. = 5118.37
(NAD 1927/SLC 1929)

SURVEY INFORMATION
FIELD NOTES

NO.	BY	DATE

ENGINEER'S SEAL

NO.	DATE	REMARKS	BY
		REVISIONS	

		DATE
DESIGNED BY	JDH	05/04
DRAWN BY	DER	05/04
CHECKED BY	DMG	05/04

dmg MARK GOODWIN & ASSOCIATES, P.A.
CONSULTING ENGINEERS
P.O. BOX 90606
ALBUQUERQUE, NEW MEXICO 87199
(505) 828-2200, FAX (505) 797-9539

ALBUQUERQUE METROPOLITAN
ARROYO FLOOD CONTROL AUTHORITY

TITLE: AMOLE CHANNEL - PHASE III
SANITARY SEWER IMPROVEMENTS
PLAN AND PROFILE

DESIGN REVIEW COMMITTEE: FEB 2 2 2006 REVIEWED
CITY ENGINEER APPROVAL: FEB 2 2 2006 CITY ENGINEER
LAST DESIGN UPDATE — MO./DAY/YR. — MO./DAY/YR.

CITY PROJECT NO. 756291 — ZONE MAP NO. N-9 — SHEET 15 OF 25

F:\AUTOCAD\A4009SNH\Amole Channel plans 2\98th Snow Vista Phase3\98X-SAS-UP2.dwg, 1/26/2006 10:22:43 AM, PLOTTED BY RDQ

RECORD DRAWINGS
HDR ENGINEERING INC.
16678 4-13-2007
Engineers Name NMPE No. Date

RECORD DRAWINGS

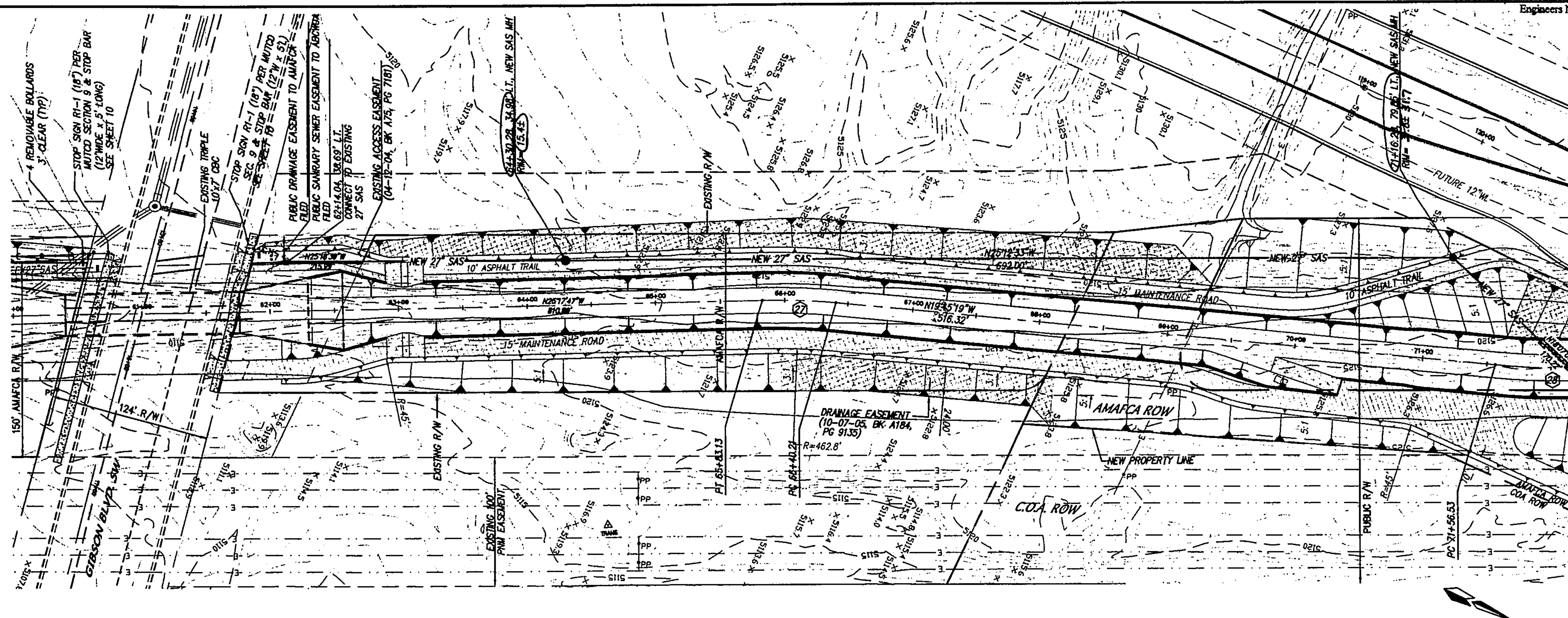

Certification
THE CHANGES SHOWN HEREON ARE BASED UPON A FIELD SURVEY CONDUCTED BY ME OR UNDER MY SUPERVISION AND REFLECT THE LOCATIONS (VERTICALLY AND HORIZONTALLY) TO THE BEST OF MY KNOWLEDGE AND BELIEF.

SCALE: 1" = 50'

AMOLE CHANNEL
STA. 58+00.00 TO STA. 69+00.00
SCALE: HORZ. 1" = 50'
VERT. 1" = 10'

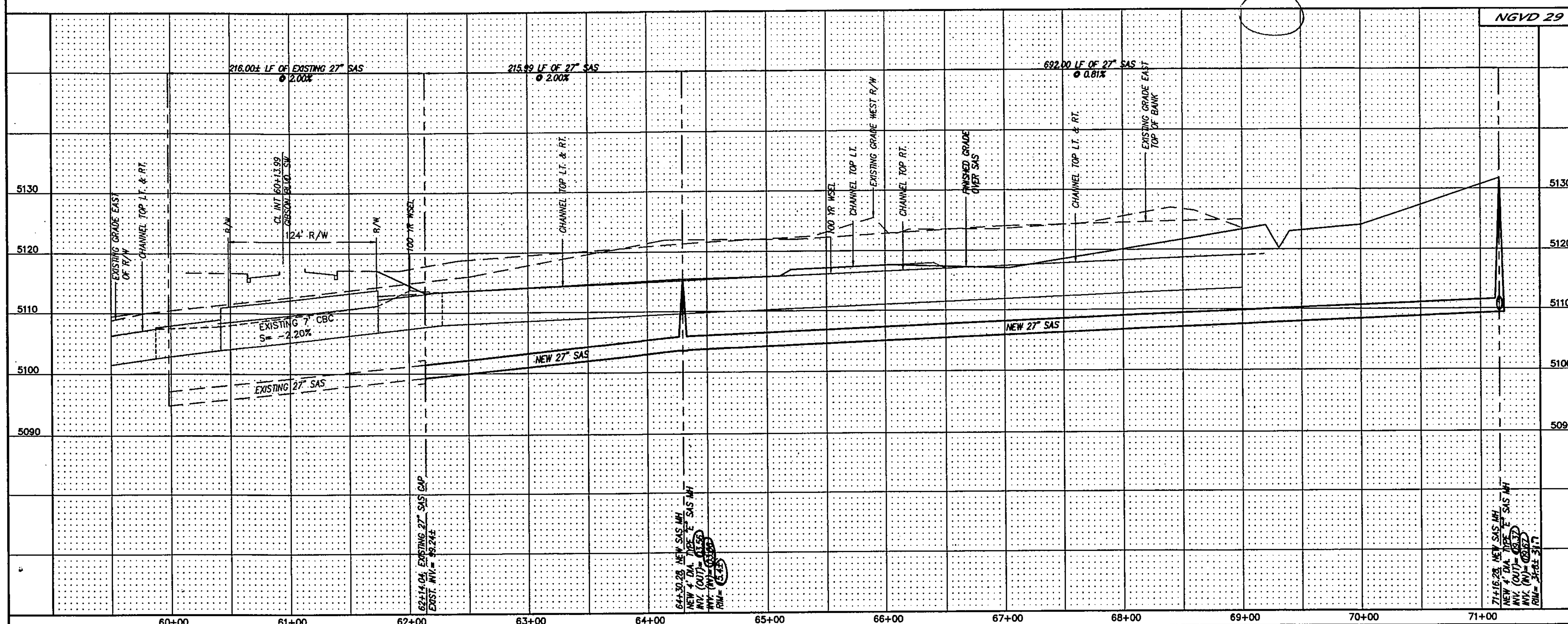

A04Jobs\A4009SNH\Amole Channel plans 2\98th Snow Vista Phase3\98X-SAS-UP3 01-25-06 DER TAS RDQ

NOTES

CURVE DATA – CENTERLINE OF CHANNEL
(27) Δ = 6°32'27"
R = 500.00'
T = 28.57'
L = 57.08'

AS BUILT INFORMATION	
CONTRACTOR	
WORK STAKED BY Cartesian Surveys Inc.	DATE 2008
INSPECTOR'S ACCEPTANCE BY	DATE
FIELD VERIFICATION BY Cartesian Surveys Inc.	DATE 2008
DRAWINGS CORRECTED BY	DATE
MICRO-FILM INFORMATION	
RECORDED BY	DATE
NO.	

BENCH MARKS

STATION "TRANS" IS LOCATED 6 MI. SOUTHWEST OF DOWNTOWN ALBUQUERQUE, IN THE R.O.W. OF A PLAINS ELECTRIC CO-OP TRANSMISSION LINE. TO REACH STATION FROM INTERSECTION OF CENTRAL AVE. & 98TH ST. SW, GO SOUTH ON 98TH ST. 1.2 MI. TO JUNCTION WITH GIBSON BLVD. & SNOW VISTA BLVD., THEN SOUTHEAST ALONG SNOW VISTA AND CO-OP ELECTRIC TRANSMISSION LINE 0.85 MI. TO PYLON NUMBERED "52". STATION IS JUST EAST OF THIS POINT. X = 354,899.45, Y = 1,471,822.67, ELEV. = 5118.37 (NAVD29).

SURVEY INFORMATION		
FIELD NOTES		
NO.	BY	DATE

ENGINEER'S SEAL

1-26-06

NO.	DATE	REMARKS	BY
		REVISIONS	
		DESIGN	
DESIGNED BY	JDH	DATE	07/05
DRAWN BY	DER	DATE	07/05
CHECKED BY	DMG	DATE	07/05

dmg MARK GOODWIN & ASSOCIATES, P.A.
CONSULTING ENGINEERS
P.O. BOX 90606
ALBUQUERQUE, NEW MEXICO 87199
(505) 828-2200, FAX (505) 797-9539

ALBUQUERQUE METROPOLITAN
ARROYO FLOOD CONTROL AUTHORITY

TITLE: AMOLE CHANNEL - PHASE III
SANITARY SEWER IMPROVEMENTS
PLAN AND PROFILE

DESIGN REVIEW COMMITTEE	CITY ENGINEER APPROVAL	MO./DAY/YR.	MO./DAY/YR.
APPROVED FEB 2 2 2006 REVIEW COMMITTEE	APPROVED FEB 2 2 2006 CITY ENGINEER	LAST DESIGN UPDATE	

CITY PROJECT NO.	ZONE MAP NO.	SHEET	OF
756291	N-9	16	25

F:\A4009SNH\Amole Channel plans 2\98th Snow Vista Phase3\98X-SAS-UP3.dwg, 1/26/2006 10:30:19 AM, PLOTTED BY RDQ

RECORD DRAWINGS
HDR ENGINEERING INC.
Engineers Name 16678 4-13-2007
NMPE No. Date

RECORD DRAWINGS

Certification
THE CHANGES SHOWN HEREON ARE BASED UPON A FIELD SURVEY CONDUCTED BY ME OR UNDER MY SUPERVISION AND REFLECT THE LOCATIONS (VERTICALLY AND HORIZONTALLY) TO THE BEST OF MY KNOWLEDGE AND BELIEF.

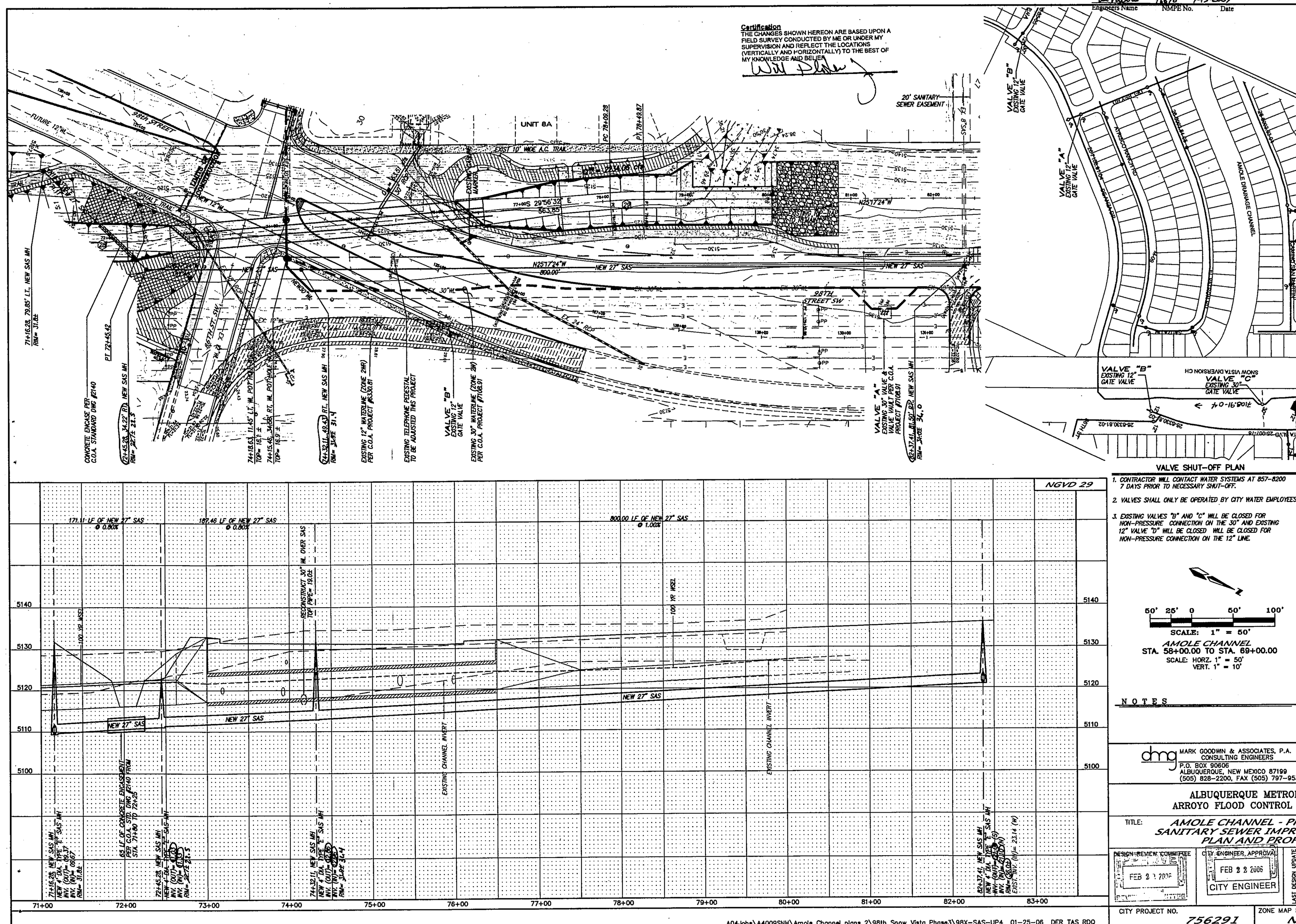

VALVE SHUT-OFF PLAN

1. CONTRACTOR WILL CONTACT WATER SYSTEMS AT 857-8200 7 DAYS PRIOR TO NECESSARY SHUT-OFF.
2. VALVES SHALL ONLY BE OPERATED BY CITY WATER EMPLOYEES.
3. EXISTING VALVES "B" AND "C" WILL BE CLOSED FOR NON-PRESSURE CONNECTION ON THE 30" AND EXISTING 12" VALVE "D" WILL BE CLOSED WILL BE CLOSED FOR NON-PRESSURE CONNECTION ON THE 12" LINE.

50' 25' 0 50' 100'
SCALE: 1" = 50'

AMOLE CHANNEL
STA. 58+00.00 TO STA. 69+00.00
SCALE: HORZ. 1" = 50'
VERT. 1" = 10'

NOTES

AS BUILT INFORMATION

CONTRACTOR		
WORK STAKED BY	Cartesian Surveys Inc.	DATE 2006
ACCEPTANCE BY		DATE
FIELD VERIFICATION BY	Cartesian Surveys Inc.	DATE 2008
DRAWINGS CORRECTED BY		DATE

MICRO-FILM INFORMATION

RECORDED BY	DATE
NO.	

BENCH MARKS

STATION "TRIANS" IS LOCATED 6 MI. SOUTHWEST OF DOWNTOWN ALBUQUERQUE, IN THE R.O.W. OF A PLAINS ELECTRIC CO-OP TRANSMISSION LINE. TO REACH STATION FROM INTERSECTION OF CENTRAL AVE. & 98TH ST. SW, GO SOUTH ON 98TH ST. 1.2 MI. TO JUNCTION WITH GIBSON BLVD. & SNOW VISTA BLVD., THEN SOUTHEAST ALONG SNOW VISTA AND CO-OP ELECTRIC TRANSMISSION LINE 0.85 MI. TO PYLON NUMBERED "52". STATION IS JUST EAST OF THIS POINT.
X = 354,899.45, Y = 1,471,822.67, ELEV. = 5118.37 (NAVD29).

SURVEY INFORMATION

NO.	DATE	BY	FIELD NOTES

ENGINEER'S SEAL

NO.	DATE	BY	REMARKS
			REVISIONS
			DESIGN

DESIGNED BY	JDH	DATE 07/05
DRAWN BY	DER	DATE 07/05
CHECKED BY	DMG	DATE 07/05

dmg MARK GOODWIN & ASSOCIATES, P.A.
CONSULTING ENGINEERS
P.O. BOX 90606
ALBUQUERQUE, NEW MEXICO 87199
(505) 828-2200, FAX (505) 797-9539

ALBUQUERQUE METROPOLITAN
ARROYO FLOOD CONTROL AUTHORITY

TITLE: AMOLE CHANNEL - PHASE III
SANITARY SEWER IMPROVEMENTS
PLAN AND PROFILE

DESIGN REVIEW COMMITTEE: FEB 2 2 2006
CITY ENGINEER APPROVAL: FEB 2 2 2006 CITY ENGINEER

LAST DESIGN UPDATE	MO./DAY/YR.	MO./DAY/YR.

CITY PROJECT NO.	ZONE MAP NO.	SHEET	OF
756291	N-9	17	25

A04Jobs\A4009SNH\Amole Channel plans 2\98th Snow Vista Phase3\98X-SAS-UP4 01-25-06 DER TAS RDQ

F:\AOJOBS\A4009SNH\Amole Channel plans 2\98th Snow Vista Phase3\98X-SAS-UP4.dwg, 1/25/2006 10:33:29 AM, PLOTTED BY RDQ

RECORD DRAWINGS
HDR ENGINEERING INC.
Tim Archuleta 16678 4-13-2007
Engineers Name NMPE No. Date

RECORD DRAWINGS

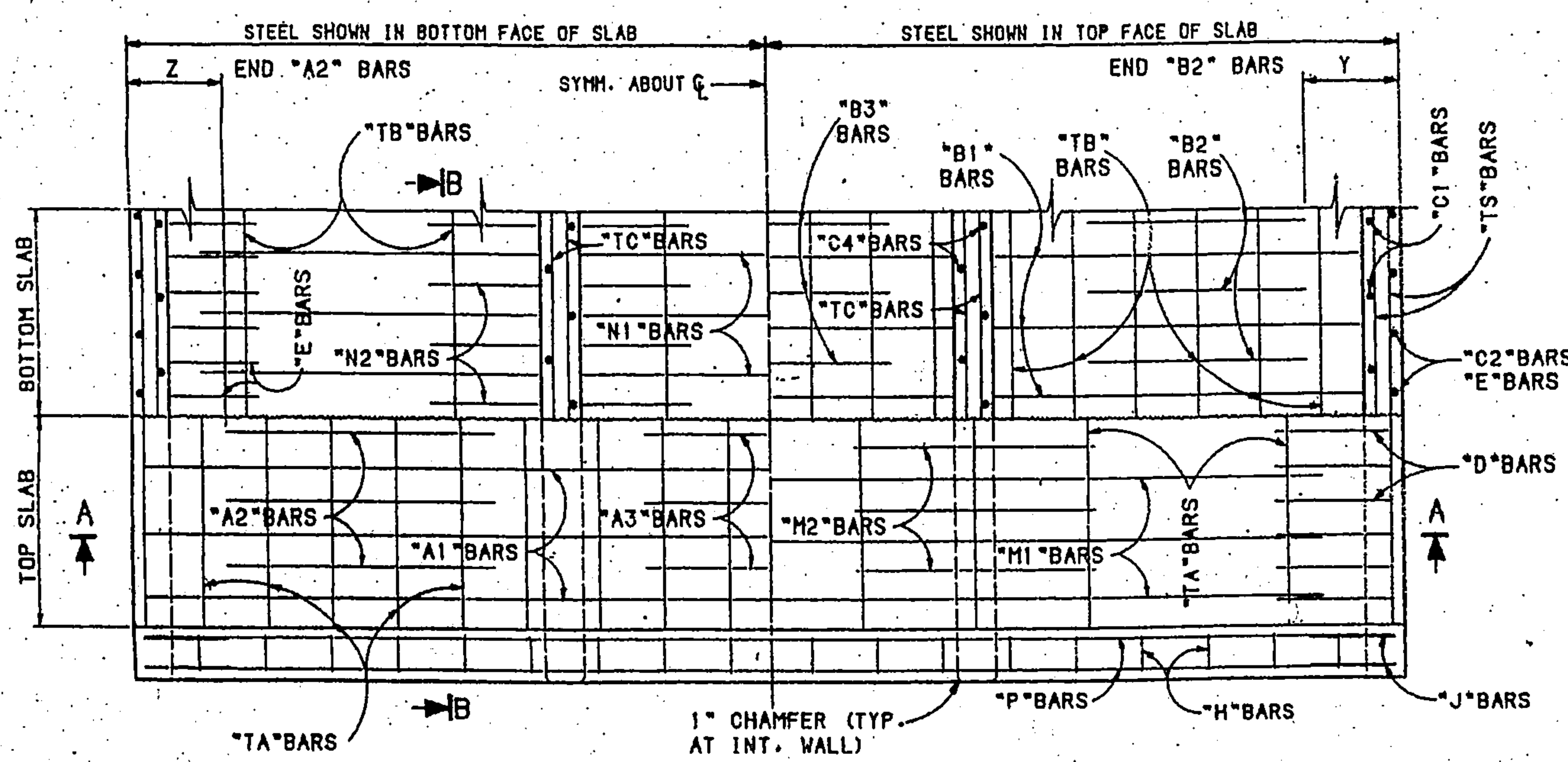

PART PLAN AND PART SECTION C-C

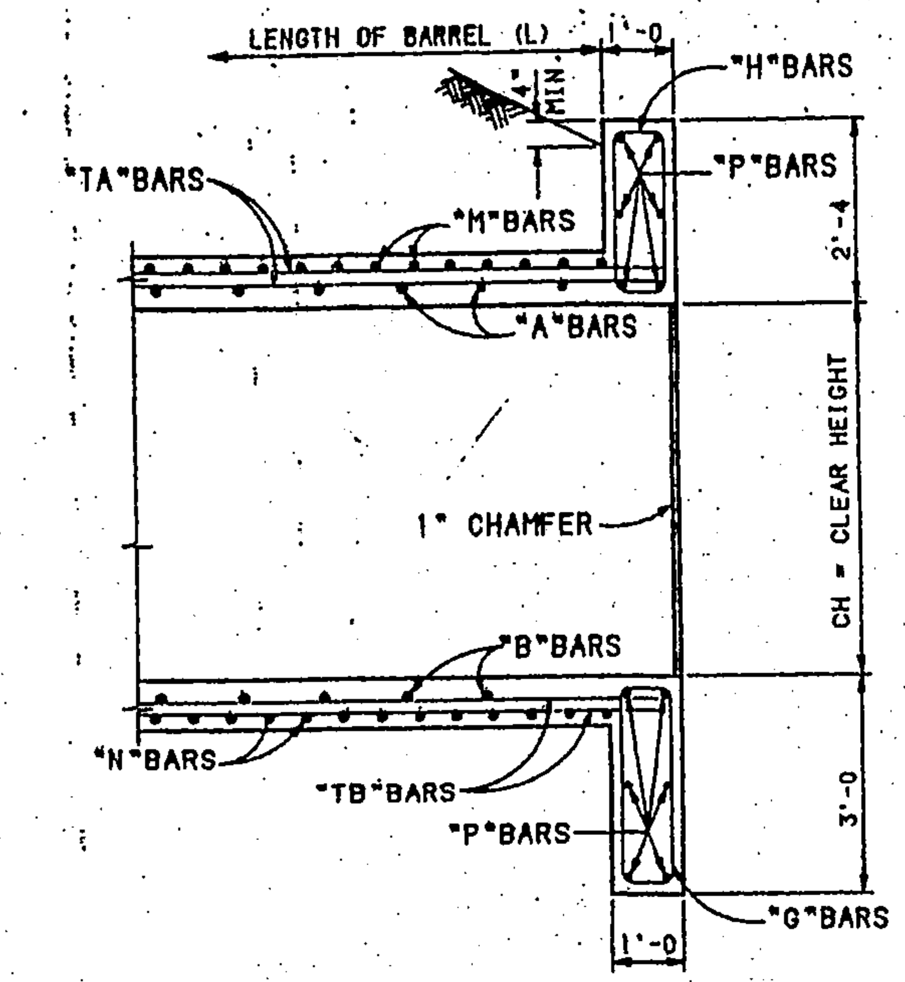

PART SECTION B-B

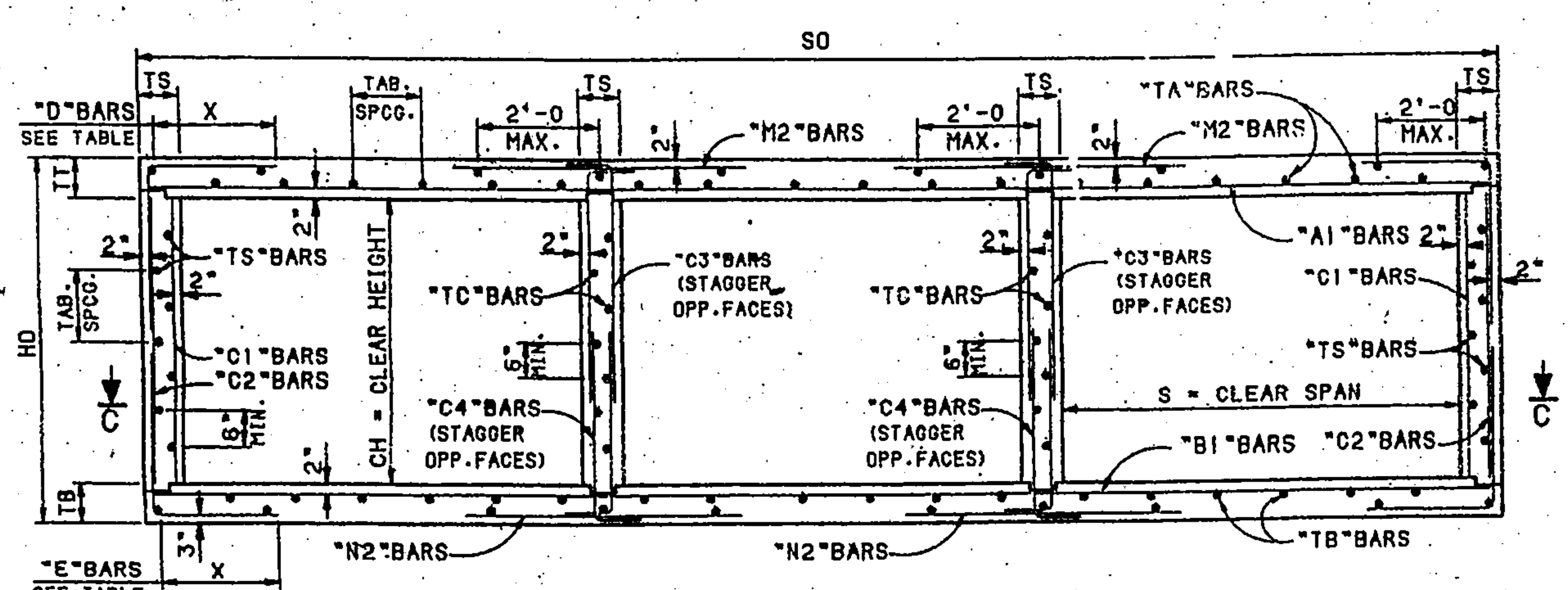

SECTION A-A

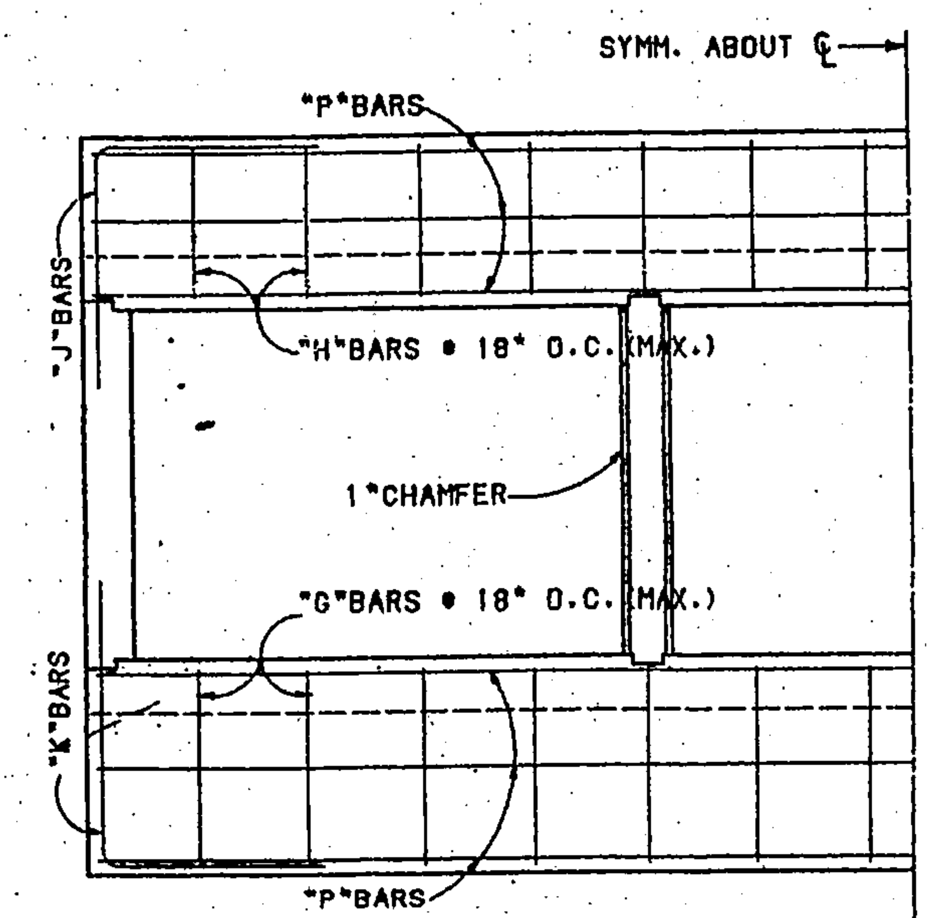

PART END ELEVATION

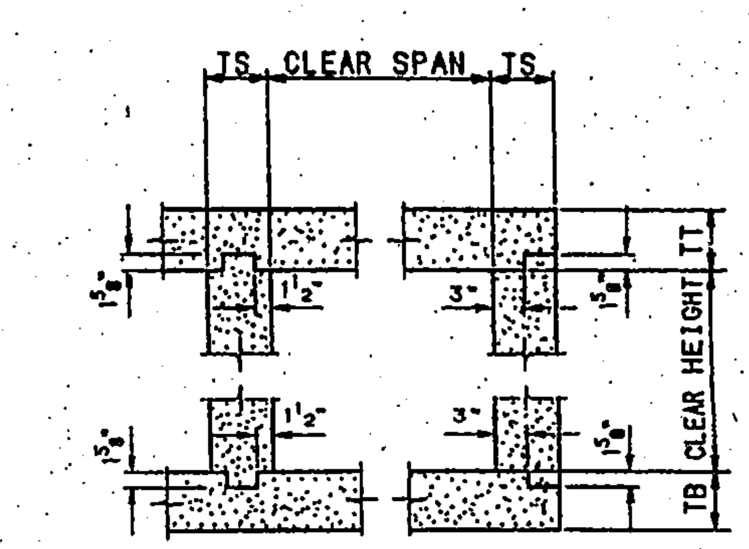

CONSTRUCTION JOINT DETAIL

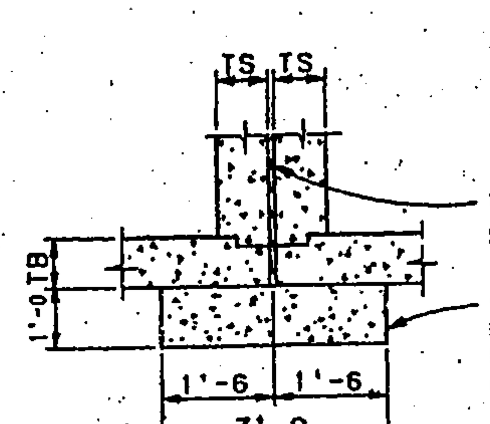

½" PREFORMED BITUMINOUS JOINT FILLER SHALL BE USED BETWEEN ADJACENT UNITS AND IT SHALL EXTEND BETWEEN BARRELS, PARAPETS, AND CUT-OFF WALLS.

THE FOUNDATION BLOCK SHALL BE PLACED IN NEAT EXCAVATION AND EXTENDED FOR THE ENTIRE LENGTH OF BARREL UNDER JOINT BETWEEN UNITS. PLACE ONE LAYER OF TAR PAPER OVER THE ENTIRE TOP SURFACE OF THE FOUNDATION BLOCK. CONCRETE QUANTITY = 0.111 CU. YDS. PER LIN. FT. OF BLOCK.

JOINT DETAIL FOR MULTIPLE UNIT BOXES

GENERAL NOTES

1. ALL CONCRETE SHALL BE CLASS "A". CHAMFER ALL THE EXPOSED EDGES 3/4".
2. ⚠ ALL REINFORCING STEEL TO BE DEFORMED BARS, CONFORMING TO AASHTO M-31, GRADE 60. ALL DIMENSIONS REFER TO THE CENTERLINE OF BAR.
3. WHEN NECESSARY, "T" BARS MAY BE SPLICED BY LAPPING AT LEAST 20 BAR DIAMETERS. PAY WEIGHT FOR REINFORCING STEEL DOES NOT INCLUDE SPLICES. THE COST OF THE SPLICE MATERIAL IS TO BE INCLUDED IN THE UNIT PRICE BID FOR REINFORCING STEEL.
4. VOLUME OF CONCRETE = (L) x (CONCRETE QUANTITY/LIN. FT.) PLUS CONCRETE AT ENDS.
5. WEIGHT OF REINFORCING STEEL = (L) x (WEIGHT OF REINF./LIN.FT.) PLUS WEIGHT AT ENDS.
6. PLACE "TA" BARS ON "A" BARS AND "TB" BARS UNDER "B" BARS, SPACED AS SHOWN IN THE TABLE, THE REMAINING "TA" BARS, AND "TB" BARS ARE TO BE PLACED ADJACENT TO THE "D", "E", "M", AND "N" BARS AS INDICATED IN "SECTION A-A", AT 2'-0 MAX.
7. PLACE "TS" BARS NEXT TO "C1" BARS, SPACED AS SHOWN IN THE TABLE; THE REMAINING "TS" BARS SHALL BE PLACED IN SIDEWALL NEXT TO "C2", "D", AND "E" BARS. WHEN "C1" BARS ARE NOT REQUIRED, PLACE ALL "TS" BARS NEXT TO "C2", "D", AND "E" BARS.
8. PLACE "A1", "A3", "B1", "B3", "M1", AND "N1" BARS SYMMETRICAL TO THE CENTERLINE OF THE BOX. PLACE "M2" AND "N2" BARS SYMMETRICAL TO THE CENTERLINE OF THE WALLS.
9. "COVER" IS HEIGHT OF FILL FROM TOP OF THE BOX TO THE FINISHED GRADE.

DESIGN DATA

DESIGN ACCORDING TO A.A.S.H.O. SPECIFICATIONS, 1957.
LIVE LOAD: H20-S16-44 & INTERSTATE ALTERNATE LOADING
WEIGHT OF FILL ON TOP OF BOX: 84#/CU.FT.
HORIZONTAL EARTH PRESSURE: 30#/CU.FT., 2' SURCHARGE
DESIGN STRESSES: f'c = 3000 psi, fc = 1200 psi,
fs = 20,000 psi, n = 10.

NO.	DESCRIPTION	DATE	BY
6			
5			
4			
3			
2			
1	REVISED NOTE #2	6-8-94	PH

REVISIONS (OR CHANGE NOTICES)

NEW MEXICO STATE HIGHWAY AND TRANSPORTATION DEPARTMENT

CONCRETE BOX CULVERT BARRELS
TRIPLE OPENING - NORMAL
ALL DESIGNS

GENERAL DATA

SERIAL GB-33

AS BUILT INFORMATION: CONTRACTOR; WORK STAKED BY Carlsbad Surveys Inc. DATE; INSPECTOR'S ACCEPTANCE BY; FIELD VERIFICATION BY Carlsbad Surveys Inc. DATE; DRAWINGS CORRECTED BY DATE
MICRO-FILM INFORMATION: RECORDED BY DATE; NO.
BENCH MARKS
SURVEY INFORMATION: FIELD NOTES — NO. | BY | DATE
ENGINEER'S SEAL: JAMES D. HUGHES, REGISTERED PROFESSIONAL ENGINEER, NEW MEXICO

NO.	DATE	REMARKS	BY
		REVISIONS	
		DESIGN	

DESIGNED BY	JDH	DATE	05/04
DRAWN BY	DER	DATE	05/04
CHECK'D BY	DMG	DATE	05/04

...CIATES, P.A. ...NEERS ...XICO 87199 (505) 797-9539

ALBUQUERQUE METROPOLITAN ARROYO FLOOD CONTROL AUTHORITY

TITLE: AMOLE CHANNEL - PHASE III (98TH STREET CROSSING) NMSHTD GENERAL INFORMATION

DESIGN REVIEW COMMITTEE | CITY ENGINEER APPROVAL | MO./DAY/YR. | MO./DAY/YR. | LAST DESIGN UPDATE

CITY PROJECT NO. # | ZONE MAP NO. N-9 | SHEET 18 OF 23

BRIDGE#1/STANDARDS/BRIDGE/STANDARDS918

DESIGNED BY: H.T. 10/93 CHECKED BY: R.A. 10/93
DETAILED BY: J.A.K. 10/93 CHECKED: R.A. 10/93
PLOT DATE: 10/28/93

F:\A04JOBS\A4009SNH\amole channel plans\P

HDR ENGINEERING INC.

Engineers Name | NMPE No. | Date

RECORD DRAWINGS

CLEAR SPAN	CLEAR HEIGHT	DIMENSIONS TT	TS	TB	SO	HO	Y	Z	QUANTITIES PER L.F. OF BARREL: REINFORCING STEEL POUNDS	CONCRETE CU. YDS.	AT ONE END *: REINFORCING STEEL POUNDS	CONCRETE CU. YDS.
4	2	6"	6"	6½"	14'-0	3'-0½	2"	2"	95.2	0.688	329	2.91
	3	6"	6"	6½"	14'-0	4'-0½	2"	2"	104.1	0.762	337	2.99
	4	6"	6"	6½"	14'-0	5'-0½	2"	2"	109.8	0.836	343	3.06
6	2	7"	6"	8"	20'-0	3'-3	2"	2"	156.6	1.074	458	4.10
	3	7"	6"	8"	20'-0	4'-3	2"	2"	163.2	1.148	467	4.17
	4	7"	6"	8"	20'-0	5'-3	2"	2"	168.5	1.222	475	4.25
	5	7"	6"	8"	20'-0	6'-3	2"	2"	181.3	1.296	485	4.32
	6	7"	6"	8"	20'-0	7'-3	2"	2"	190.9	1.370	496	4.40
8	4	8½"	6"	9½"	26'-0	5'-6	2"	2"	256.6	1.741	786	5.43
	5	8½"	6"	9½"	26'-0	6'-6	2"	2"	268.3	1.815	798	5.51
	6	8½"	6"	9½"	26'-0	7'-6	2"	2"	283.7	1.889	824	5.59
	7	8½"	7"	9½"	26'-4	8'-6	2"	2"	295.4	2.068	831	5.82
	8	8½"	8"	9½"	26'-8	9'-6	2"	2"	295.6	2.272	843	6.07
10	4	10"	6"	11"	32'-0	5'-9	2"	2"	354.8	2.370	1136	6.62
	5	10"	6"	11"	32'-0	6'-9	2"	2"	368.3	2.444	1148	6.69
	6	10"	6½"	11"	32'-2	7'-9	2"	2"	392.3	2.566	1214	6.84
	7	10"	7"	11"	32'-4	8'-9	2"	2"	405.0	2.701	1232	7.00
	8	10"	8"	11½"	32'-8	9'-9½	2"	2"	416.1	2.958	1259	7.26
	9	10"	8"	11½"	32'-8	10'-9½	2"	2"	444.6	3.057	1292	7.37
	10	10"	9"	11½"	33'-0	11'-9½	2"	2"	445.3	3.301	1316	7.66
	11	10"	9"	11½"	33'-0	12'-9½	2"	2"	449.2	3.412	1351	7.82
	12	10"	9"	11½"	33'-0	13'-9½	2"	2"	520.2	3.523	1376	8.00
12	6	11½"	6½"	12½"	38'-2	8'-0	2"	2"	527.6	3.309	1696	8.02
	8	11½"	8"	12½"	38'-8	10'-0	2"	2"	572.6	3.654	1758	8.44
	10	11½"	9"	13"	39'-0	12'-0½	2"	2"	573.0	4.060	1850	8.85
	12	11½"	9½"	13"	39'-2	14'-0½	2"	2"	655.1	4.369	1905	9.26
14	8	13½"	8½"	14½"	44'-10	10'-4	2"	2"	713.4	4.714	2454	9.70
	10	13"	9"	14½"	45'-0	12'-3½	2"	2"	790.0	4.930	2514	10.03
	12	13"	9½"	14½"	45'-2	14'-3½	2"	2"	867.7	5.241	2560	10.45
	14	13"	11"	14½"	45'-8	16'-3½	2"	2"	929.4	5.777	2650	11.11

REINFORCING BARS

CLEAR SPAN	CLEAR HEIGHT	"A" BARS: A1 SIZE	A1 LENGTH	A2 SIZE	A2 LENGTH	A3 SIZE	A3 LENGTH	SPACING	"B" BARS: B1 SIZE	B1 LENGTH	B2 SIZE	B2 LENGTH	B3 SIZE	B3 LENGTH	SPACING
4	2	#4	13'-9	#4	4'-3	--	NONE	18"	#4	13'-9	#4	4'-3	--	NONE	15*
	3	#4	13'-9	#4	4'-3	--	NONE	18"	#4	13'-9	#4	4'-3	--	NONE	14"
	4	#4	13'-9	#4	4'-3	--	NONE	18"	#4	13'-9	#4	4'-3	--	NONE	13"
6	2	#4	18'-0	#4	5'-9	--	NONE	11"	#4	18'-0	#4	5'-9	--	NONE	11"
	3	#4	18'-0	#4	5'-9	--	NONE	11"	#4	18'-0	#4	5'-9	--	NONE	11"
	4	#4	18'-0	#4	5'-9	--	NONE	11"	#4	18'-0	#4	5'-9	--	NONE	11"
	5	#4	18'-0	#4	5'-9	--	NONE	11"	#4	18'-0	#4	5'-9	--	NONE	11"
	6	#4	18'-0	#4	5'-9	--	NONE	11"	#4	18'-0	#4	5'-9	--	NONE	11"
8	4	#4	21'-6	#7	8'-0	#4	4'-9	17"	#4	21'-6	#7	8'-0	#4	4'-9	17"
	5	#4	21'-6	#7	8'-0	#4	4'-9	17"	#4	21'-6	#7	8'-0	#4	5'-0	17"
	6	#4	21'-6	#7	8'-6	#4	4'-9	17"	#4	21'-6	#7	8'-6	#4	5'-0	17"
	7	#4	21'-6	#7	8'-6	#4	5'-0	17"	#4	21'-6	#7	8'-6	#4	5'-0	17"
	8	#4	21'-9	#6	8'-6	#4	5'-0	15"	#4	21'-9	#6	8'-6	#4	5'-0	15"
10	4	#4	26'-6	#7	10'-6	#4	6'-0	13½"	#4	26'-0	#7	10'-6	#4	6'-3	13½"
	5	#4	26'-6	#7	10'-6	#4	6'-0	13½"	#4	26'-0	#7	10'-6	#4	6'-3	13½"
	6	#4	26'-6	#7	10'-6	#4	6'-0	13½"	#4	26'-0	#7	10'-6	#4	6'-3	13½"
	7	#4	26'-6	#7	10'-6	#4	6'-0	13½"	#4	26'-0	#7	10'-6	#4	6'-3	13½"
	8	#5	26'-9	#7	10'-6	#4	6'-0	16"	#5	26'-0	#7	10'-9	#4	6'-3	16"
	9	#5	26'-9	#6	10'-6	#4	6'-0	12"	#5	26'-0	#7	10'-9	#4	6'-3	16"
	10	#4	26'-9	#6	10'-6	#4	6'-0	12"	#4	26'-0	#7	10'-9	#5	6'-3	14"
	11	#4	27'-0	#7	10'-6	#5	6'-0	14"	#4	27'-0	#7	10'-6	#5	6'-3	14"
	12	#4	27'-0	#7	10'-6	#5	6'-0	14"	#4	27'-0	#7	10'-6	#5	6'-3	14"
12	6	#5	35'-6	#6	10'-6	#4	6'-0	10½"	#5	35'-6	#6	11'-0	#4	6'-0	10½"
	8	#5	35'-6	#6	10'-6	#4	6'-0	10½"	#5	35'-6	#6	11'-0	#4	6'-0	10½"
	10	#5	35'-6	#6	10'-6	#4	6'-0	11"	#5	35'-6	#6	11'-0	#4	6'-3	11"
	12	#5	35'-6	#6	10'-6	#4	6'-0	10½"	#5	35'-6	#6	11'-0	#4	6'-3	10½"
14	8	#5	40'-0	#7	13'-6	#4	7'-6	11½"	#5	40'-0	#7	13'-6	#4	7'-0	11½"
	10	#5	40'-0	#7	13'-6	#4	7'-6	10"	#5	40'-0	#7	13'-6	#4	7'-6	11½"
	12	#5	40'-0	#6	13'-6	#4	7'-6	9½"	#5	40'-0	#6	13'-6	#4	7'-6	9½"
	14	#5	40'-0	#6	13'-6	#4	7'-6	9½"	#5	40'-0	#6	13'-6	#4	7'-6	9½"

CLEAR SPAN	CLEAR HEIGHT	"C" BARS: C1 SIZE	C1 SPACING	C2 SIZE	C2 SPACING	C3 SIZE	C3 LENGTH	C4 LENGTH	SPACING	"M" BARS: M1 SIZE	M1 LENGTH	M2 SIZE	M2 LENGTH	SPACING
4	2	NONE	NONE	#4	2'-3	2'-3	15"	#4	12'-0	#4	3'-0	13"	#4	12'-0
	3	NONE	NONE	#4	2'-9	2'-9	15"	#4	12'-0	#4	3'-0	13"	#4	12'-0
	4	NONE	NONE	#4	3'-3	3'-3	15"	#4	12'-0	#4	3'-0	13"	#4	12'-0
6	2	NONE	NONE	#4	2'-3	2'-3	15"	#4	18'-3	#6	4'-6	12"	#4	18'-3
	3	NONE	NONE	#4	2'-9	2'-9	15"	#4	18'-3	#6	4'-6	12"	#4	18'-3
	4	NONE	NONE	#4	3'-6	3'-0	15"	#4	18'-3	#6	4'-6	12"	#4	18'-3
	5	NONE	NONE	#4	4'-6	3'-0	15"	#4	18'-3	#6	4'-6	12"	#4	18'-3
	6	NONE	NONE	#4	5'-6	3'-0	15"	#4	18'-3	#6	4'-6	12"	#4	18'-3
8	4	NONE	NONE	#4	4'-0	3'-0	11½"	#4	23'-9	#7	6'-0	11½"	#4	23'-9
	5	NONE	NONE	#4	5'-0	3'-0	11½"	#4	23'-9	#7	6'-0	11½"	#4	23'-9
	6	NONE	NONE	#4	6'-0	3'-0	11½"	#4	23'-9	#7	6'-0	11½"	#4	23'-9
	7	NONE	NONE	#4	7'-0	3'-0	11½"	#4	23'-9	#7	6'-0	11½"	#4	23'-9
	8	NONE	NONE	#4	8'-0	3'-0	11½"	#4	24'-0	#7	6'-0	11½"	#4	24'-0
10	4	NONE	NONE	#4	4'-0	3'-3	13½"	#4	30'-0	#7	6'-6	9"	#4	30'-0
	5	NONE	NONE	#4	5'-0	3'-3	13½"	#4	30'-0	#7	6'-6	9"	#4	30'-0
	6	NONE	NONE	#5	6'-3	3'-3	13½"	#4	30'-0	#7	6'-6	9"	#4	30'-0
	7	NONE	NONE	#5	7'-3	3'-3	14"	#4	30'-0	#7	6'-6	9"	#4	30'-0
	8	NONE	NONE	#5	8'-3	3'-3	15"	#4	30'-3	#7	6'-6	9"	#4	30'-3
	9	NONE	NONE	#5	9'-3	3'-3	16"	#4	30'-3	#7	6'-6	9"	#4	30'-3
	10	#4	18"	#5	10½"	#5	10'-3	3'-3	18"	#4	30'-6	#7	6'-6	9"
	11	#4	12"	#5	12"	#5	11'-3	3'-3	18"	#4	31'-0	#7	6'-6	9"
	12	#5	12"	#6	10"	#5	12'-3	3'-3	18"	#4	32'-3	#7	6'-6	9"
12	6	NONE	NONE	#5	6'-6	3'-3	15"	#5	37'-0	#8	7'-6	10½"	#5	37'-0
	8	#4	18"	NONE	NONE	#5	8'-6	3'-3	15"	#5	37'-0	#8	7'-6	10½"
	10	#4	18"	#4	10½"	#5	10'-6	3'-3	18"	#5	37'-0	#8	7'-6	10½"
	12	#5	14"	#6	10½"	#5	12'-9	3'-3	14"	#5	37'-3	#8	7'-6	10½"
14	8	NONE	NONE	NONE	NONE	#5	8'-9	3'-3	15"	#6	41'-3	#8	7'-6	10"
	10	#4	18"	#6	10"	#5	10'-9	3'-6	15"	#6	41'-3	#8	7'-6	9½"
	12	#4	13"	#6	9½"	#5	12'-9	3'-3	9½"	#6	41'-3	#8	7'-6	9½"
	14	#5	12"	#6	9½"	#5	14'-9	3'-3	9½"	#6	41'-3	#8	7'-6	9½"

CLEAR SPAN	CLEAR HEIGHT	"N" BARS: N1 SIZE	N1 LENGTH	N2 SIZE	N2 LENGTH	SPACING	"D" SIZE	D LENGTH	D "X"	D SPACING	"E" SIZE	E LENGTH	E "X"	E SPACING
4	2	#4	3'-0	#4	3'-0	11"	#4	3'-6	1'-6	15"	#4	3'-6	1'-6	15"
	3	#4	4'-6	1'-6	1'-6	12"	#4	4'-0	1'-6	12"	#4	4'-0	1'-6	12"
	4	#4	4'-6	1'-6	1'-6	12"	#4	4'-5	1'-6	12"	#4	4'-5	1'-6	12"
6	2	#4	3'-0	#4	3'-0	11"	#5	3'-6	1'-6	14"	#5	3'-6	1'-6	14"
	3	#4	4'-6	1'-6	1'-6	12"	#5	4'-0	1'-6	14"	#5	4'-0	1'-6	14"
	4	#4	4'-6	1'-6	1'-6	12"	#5	4'-6	1'-6	14"	#5	4'-6	1'-6	14"
	5	#4	4'-6	1'-6	1'-6	12"	#5	5'-0	1'-6	11"	#5	5'-0	1'-6	11"
	6	#4	4'-6	1'-6	1'-6	12"	#5	5'-6	1'-6	10"	#5	5'-6	1'-6	10"
8	4	#4	6'-0	1½"	1'-9	14"	#6	5'-0	1'-9	14"	#6	5'-0	1'-9	14"
	5	#4	6'-0	1½"	1'-9	13"	#6	5'-6	1'-9	13"	#6	5'-6	1'-9	13"
	6	#4	6'-0	1½"	1'-9	11½"	#6	6'-0	1'-9	11½"	#6	6'-0	1'-9	11½"
	7	#4	6'-0	1½"	1'-9	11"	#6	6'-9	2'-0	11"	#6	6'-9	2'-0	11"
	8	#4	6'-0	1½"	1'-9	11"	#6	7'-3	2'-0	10½"	#6	7'-3	2'-0	10½"
10	4	#4	6'-6	9"	#4	30'-0	#7	6'-6	1'-9	11"	#6	5'-3	1'-9	11"
	5	#4	6'-6	9"	#4	30'-0	#7	6'-6	1'-9	10½"	#6	5'-9	1'-9	10½"
	6	#4	6'-6	9"	#4	30'-0	#7	6'-6	1'-9	13½"	#7	6'-6	1'-9	13½"
	7	#4	6'-6	9"	#4	30'-0	#7	6'-6	1'-9	12"	#7	6'-6	1'-9	12"
	8	#4	6'-6	9"	#4	30'-3	#7	6'-6	1'-9	12"	#7	6'-6	1'-10	12"
	9	#4	6'-6	9"	#4	30'-3	#7	6'-6	1'-10	10½"	#7	6'-6	1'-10	10½"
	10	#4	6'-6	9"	#4	30'-3	#7	6'-6	2'-0	10½"	#7	5'-0	2'-0	10½"
	11	#4	6'-6	9"	#4	31'-0	#7	5'-6	2'-3	10½"	#8	5'-6	2'-3	12"
	12	#4	6'-6	9"	#4	32'-0	#7	6'-6	2'-6	9"	#8	5'-9	2'-6	10½"
12	6	#5	37'-0	#8	7'-6	10½"	#7	7'-0	1'-9	13"	#7	7'-0	1'-9	13"
	8	#5	37'-0	#8	7'-6	10½"	#7	7'-9	1'-9	10½"	#7	7'-3	1'-9	10½"
	10	#5	37'-0	#8	7'-6	10½"	#8	5'-0	1'-9	10½"	#8	5'-0	1'-9	10½"
	12	#5	37'-3	#8	7'-6	10½"	#8	5'-9	1'-9	10½"	#8	5'-9	1'-9	10½"
14	8	#6	41'-3	#8	7'-6	10"	#8	9'-6	2'-4	11½"	#8	7'-0	2'-4	11½"
	10	#6	41'-3	#8	7'-6	9½"	#8	6'-6	2'-6	10"	#8	6'-6	2'-6	10"
	12	#6	41'-3	#8	7'-6	9½"	#8	7'-3	2'-9	9½"	#8	7'-3	2'-9	9½"
	14	#6	41'-3	#8	7'-6	9½"	#8	7'-9	3'-0	9½"	#9	8'-3	3'-3	9½"

CLEAR SPAN	CLEAR HEIGHT	"TA" NO.	TA SIZE	TA SPACING	"TB" NO.	TB SIZE	TB SPACING	"TC" NO.	TC SIZE	TC SPACING	"TS" NO.	TS SIZE	TS SPACING	G.H NO. OF EA. AT 1 END
4	2	19	#4	16"	19	#4	16"	8	#4	18"	4	#4	18"	9
	3	19	#4	16"	19	#4	16"	8	#4	18"	6	#4	15"	9
	4	19	#4	16"	19	#4	16"	10	#4	18"	6	#4	18"	9
6	2	25	#4	18"	25	#4	18"	6	#4	18"	4	#4	18"	12
	3	25	#4	18"	25	#4	18"	8	#4	18"	6	#4	15"	12
	4	25	#4	18"	25	#4	18"	10	#4	18"	6	#4	18"	12
	5	25	#4	18"	25	#4	18"	14	#4	18"	8	#4	16"	12
	6	25	#4	18"	25	#4	18"	16	#4	18"	10	#4	15"	12
8	4	34	#4	16"	34	#4	16"	10	#4	18"	6	#4	18"	18
	5	34	#4	16"	34	#4	16"	14	#4	18"	8	#4	16"	18
	6	34	#4	16"	34	#4	16"	16	#4	18"	10	#4	15"	18
	7	34	#4	16"	34	#4	16"	18	#4	18"	10	#4	18"	18
	8	34	#4	16"	34	#4	16"	22	#4	18"	12	#4	17"	18
10	4	40	#4	18"	40	#4	18"	10	#4	18"	8	#4	16"	21
	5	40	#4	18"	40	#4	18"	14	#4	18"	8	#4	16"	21
	6	40	#4	18"	40	#4	18"	16	#4	18"	10	#4	15"	21
	7	40	#4	18"	40	#4	18"	18	#4	18"	10	#4	18"	21
	8	43	#4	18"	43	#4	18"	22	#4	18"	12	#4	18"	21
	9	43	#4	18"	43	#4	18"	24	#4	18"	24	#4	18"	21
	10	43	#4	18"	43	#4	18"	26	#4	18"	26	#4	18"	21
	11	43	#4	18"	43	#4	18"	30	#4	18"	30	#4	18"	21
	12	43	#4	18"	43	#4	18"	32	#4	18"	32	#4	18"	21
12	6	58	#4	16"	58	#4	16"	16	#4	18"	10	#4	15"	24
	8	58	#4	16"	58	#4	16"	22	#4	18"	22	#4	18"	24
	10	58	#4	16"	55	#4	16"	26	#4	18"	26	#4	18"	24
	12	58	#4	16"	55	#4	16"	32	#4	18"	32	#4	18"	24
14	8	76	#4	14"	76	#4	14"	22	#4	18"	12	#4	17"	30
	10	76	#4	14"	76	#4	14"	26	#4	18"	26	#4	18"	30
	12	76	#4	14"	76	#4	14"	32	#4	18"	32	#4	18"	30
	14	76	#4	14"	76	#4	14"	38	#4	18"	38	#4	18"	30

9"

"P" BARS

CLEAR SPAN	4'	6'	8'	10'	12'	14'
SIZE	#5	#5	#6	#7	#8	#9

* NOTE: QUANTITIES "AT ONE END" INCLUDE PARAPET, CUT-OFF WALL, AND BARREL BEYOND LENGTH "L". WINGWALL QUANTITIES ARE NOT INCLUDED.

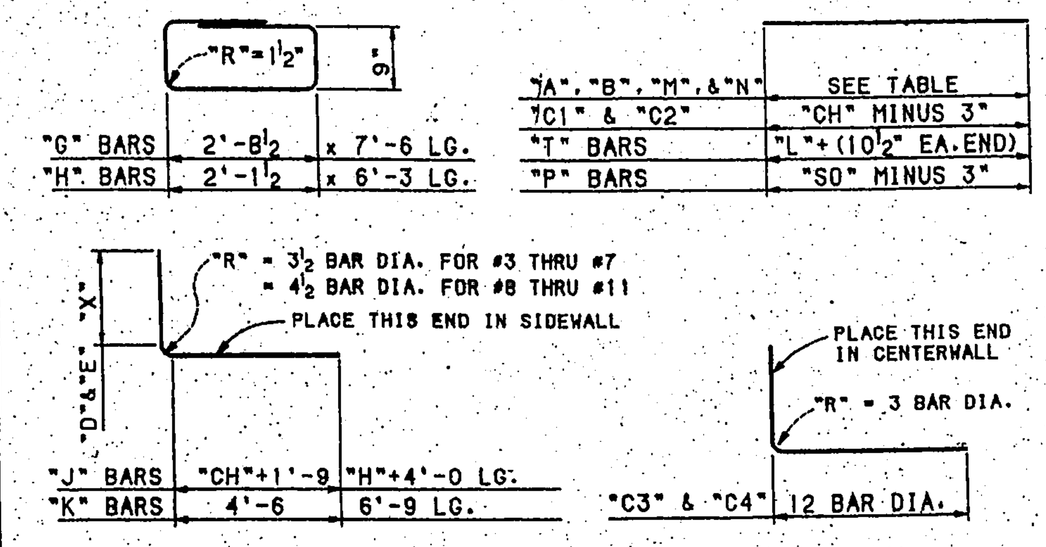

NOTE: "J" BARS ARE THE SAME SIZE AS "D" BARS.
"K" BARS ARE THE SAME SIZE AS "E" BARS.

REINFORCING STEEL DIAGRAM

NUMBER OF BARS REQUIRED

"A1", "A3", "B1", "B3", "M1", & "N1" BARS: 12L ÷ SPACING
"A2", "B2", "C2", "D", "E", "M2", & "N2" BARS: 24L ÷ SPACING
"P" BARS: 12 FOR CUT-OFF & PARAPET AT EACH END
"C1" BARS: (24L ÷ SPACING) PLUS 2 AT EACH END
"C3" & "C4" BARS: (48L ÷ SPACING) PLUS 4 AT EACH END
"J" & "K" BARS: 4 OF EACH AT EACH END (FOR PARAPET AND CUT-OFF WALL)
OTHER BARS: SEE TABLE
"L" = LENGTH OF BARREL IN FEET
"CH" = CLEAR HEIGHT

NOTE: REFER TO SERIAL CB-33 SHEET 1 OF 5 FOR CONCRETE BOX CULVERT DETAILS, DESIGN DATA, AND GENERAL NOTES.

NO.	DESCRIPTION	DATE	BY
6			
5			
4			
3			
2			
1			

REVISIONS (OR CHANGE NOTICES)

NEW MEXICO STATE HIGHWAY AND TRANSPORTATION DEPARTMENT

CONCRETE BOX CULVERT BARRELS
TRIPLE OPENING - NORMAL
DESIGN No. 2
5' TO 10' COVER

LAYOUT BY / DRAWN BY / DESIGNED BY / APPROVAL / APPROVAL

SERIAL CB-33 SHEET 3 OF 5

AS BUILT INFORMATION: CONTRACTOR / SURVEYED BY / STAKED BY Cardelan Surveys Inc. DATE / INSPECTOR'S / FIELD VERIFICATION BY / DATE / FIELD VERIFICATION BY Cardelan Surveys Inc. DATE / DRAWINGS CORRECTED BY / DATE / MICRO-FILM INFORMATION / RECORDED BY / DATE / NO.

BENCH MARKS

SURVEY INFORMATION: FIELD NOTES / NO. / BY / DATE

ENGINEER'S SEAL

NO.	DATE	REMARKS	BY

REVISIONS

		DATE
DESIGNED BY	JDH	05/04
DRAWN BY	DER	05/04
CHECKED BY	DMG	05/04

ALBUQUERQUE METROPOLITAN ARROYO FLOOD CONTROL AUTHORITY

TITLE: AMOLE CHANNEL- PHASE III (98TH STREET CROSSING) NMSHTD TRIPLE CBC DESIGN

DESIGN REVIEW COMMITTEE / CITY ENGINEER APPROVAL / LAST DESIGN UPDATE / MO./DAY/YR. / MO./DAY/YR.

CITY PROJECT NO. # / ZONE MAP NO. N-9 / SHEET 19 OF 23

BRIDGE#1/STANDARDS/BRIDGE/STANDARDS1GB

CHECKED BY: S.J.M. 10/93 PLOT DATE: 10/28/93
DESIGNED BY: H.T. 1/61 CHECKED BY: R.A. 10/93
DETAILED BY: J.A.K. 10/93

F:\A04JOBS\A4009SHH\amole channel plans\Phase1\400"

RECORD DRAWINGS

HDR ENGINEERING INC.
16678 4-13-2007
Engineer Name NMPE No. Date

REINFORCING BARS ~ ONE SKEW END

Clear Span	Clear Height	Dimension A	Dimension Q	aa Size	bb Size	aa & bb X	aa & bb B	aa & bb C	aa & bb Spacing	mm Size	nn Size	mm & nn X	mm & nn B	mm & nn C	mm & nn Spacing	p Size	g,h No. of ea.
4	2																
	3																
	4																
6	2																
	3	2'-1"	2'-0½	6φ	5φ	32	19'-9"	7"	7"	6φ	6φ	28	19'-9"	8"	8	6	18
	4	2'-1"	2'-1"	6φ	4φ	32	19'-9"	7"	7"	4φ	5φ	37	19'-9"	6"	6"	6	18
	5	2'-1"	2'-2"	6φ	5φ	32	19'-9"	7"	7"	6φ	6φ	28	19'-9"	8"	8"	6	18
	6	2'-2"	2'-2"	7φ	5φ	25	19'-9"	9"	9"	6φ	6φ	28	19'-9"	8"	8"	6	18
8	4	2'-5"	2'-1	8φ	6φ	31	25'-9	9½"	9½	7φ	7φ	35	25'-9"	8½	8½"	7φ	24
	5	2'-10"	2'-10	7φ	5φ	36	25'-9"	8"	8"	7φ	7φ	29	25'-9"	10"	10"	7φ	24
	6	1'-11"	2'-4	6φ	5φ	54	25'-9"	5½"	5½"	6φ	6φ	45	25'-9"	6½"	6½"	7φ	24
	7	2'-0¼	2'-0½	6φ	5φ	52	26'-1	5¾"	5¾	6φ	6φ	40	26'-1"	7½	7½	7φ	24
	8																
10	4	2'-4"	2'-4"	7φ	6φ	46	31'-11"	8"	8"	8φ	8φ	41	31'-11"	9"	9"	8φ	30
	5	2'-5"	2'-5"	8φ	7φ	35	31'-9"	10½"	10½"	8φ	8φ	41	31'-9"	9"	9"	8φ	30
	6	2'-3"	2'-2	7φ	6φ	46	31'-9"	8"	8"	8φ	8φ	41	31'-9"	9"	9"	8φ	30
	7	1'-8"	2'-0	7φ	6φ	50	32'-1"	7½"	7½"	7φ	7φ	57	32'-1"	6½"	6½"	8φ	30
	8	2'-8"	2'-11	8φ	7φ	35	32'-4"	10½"	10½"	9φ	9φ	33	32'-4"	11"	11"	8φ	30
	9																
	10	2'-5	2'-9	8φ	7φ	34	32'-7"	11"	11"	8φ	8φ	41	32'-8"	9"	9"	8φ	30
	11																
	12																
12	6	1'-4¾	1'-7¾	6	6φ	81	37'-11	5½"	5½"	7	7	77	37'-11	5¾"	5¾	9	36
	8	2'-8"	2'-11	8φ	8φ	44	38'-4"	10"	10"	9φ	9	46	38'-4"	9½"	9½	9φ	36
	10	3'-0"	2'-3	8φ	8φ	38	38'-6"	11½"	11½"	8φ	8φ	59	38'-6"	7½"	7½"	9φ	36
	12	2'-8	2'-10	8φ	8φ	44	38'-5"	10"	10"	9φ	9φ	46	38'-5"	9½"	9½	9φ	36
14	8	2'-7"	2'-6	8φ	7φ	57	44'-5"	9"	9"	7φ	8φ	85	44'-4"	6"	6"	9φ	42
	10																
	12	2'-9"	2'-3	8φ	7φ	54	44'-8"	9½"	9½"	7φ	7φ	86	44'-8"	6"	6"	9φ	42
	14																

DESIGN No. 1 ~ 0' TO 5' COVER

Clear Span	Clear Height	Triple Opening Boxes P	Triple Reinf. Steel Lbs.	Triple Conc. Cu.Yds.	Unit A3 P_A	Unit A3 Reinf. Steel Lbs.	Unit A3 Conc. Cu.Yds.	Unit I3 P_I	Unit I3 Reinf. Steel Lbs.	Unit I3 Conc. Cu.Yds.	Unit B3 P_B	Unit B3 Reinf. Steel Lbs.	Unit B3 Conc. Cu.Yds.
4	2												
	3												
	4												
6	2												
	3	29'-1"	1532	6.15	29'-0⅝"	1525	6.05	28'-3½"	1517	5.93	28'-4"	1524	6.00
	4	29'-1"	1214	6.28	29'-0½"	1207	6.17	28'-3½"	1199	6.01	28'-4"	1205	6.12
	5	29'-1"	1778	6.41	29'-0¼"	1773	6.30	28'-3½"	1763	6.11	28'-4"	1770	6.23
	6	29'-1"	1532	6.55	29'-0¾"	1527	6.42	28'-3½"	1511	6.22	28'-4"	1524	6.35
8	4	37'-6¾	2975	7.96	37'-6½"	2966	7.85	36'-9¼"	2954	7.68	36'-9¾"	2964	7.79
	5	37'-6¾"	2352	8.09	37'-6½"	2342	7.97	36'-9¼"	2331	7.79	36'-9¾"	2340	7.91
	6	37'-6¾"	2761	8.22	37'-6½"	2753	8.10	36'-9¼"	2740	7.89	36'-9¾"	2748	8.03
	7	38'-0	2569	8.56	38'-0	2562	8.43	37'-3"	2551	8.21	37'-3	2558	8.34
	8												
10	4	46'-2¾"	4722	9.69	46'-3"	4713	9.61	45'-6"	4698	9.44	45'-5¾"	4707	9.53
	5	46'-2¾"	4717	9.83	46'-3"	4708	9.74	45'-6"	4693	9.55	45'-5¾"	4702	9.65
	6	46'-0½"	4884	9.90	46'-0¼"	4872	9.77	45'-3"	4857	9.57	45'-3½"	4869	9.70
	7	46'-5¾"	5161	10.23	46'-6"	5152	10.11	45'-8¾"	5137	9.89	45'-8¾"	5146	10.02
	8	46'-11"	5134	10.60	46'-11½"	5124	10.48	46'-2¼"	5110	10.24	46'-2"	5119	10.37
	9												
	10	47'-5¼"	5010	11.23	47'-5½"	5000	11.07	46'-8¼"	4986	10.19	46'-8¼"	4995	10.96
	11												
	12												
12	6	54'-6½	9151	11.65	54'-8⅝	9140	11.55	53'-11½	9121	11.35	53'-11½	9132	11.45
	8	55'-5"	8521	12.26	54'-5½	8509	12.16	54'-8¼"	8490	11.92	54'-8"	8502	12.04
	10												
	12	56'-1"	8370	13.38	55'-11"	8351	13.09	55'-1¾"	8332	12.78	55'-4"	8351	13.08
14	8	63'-10¾"	9295	13.95	63'-11¼"	9283	13.84	63'-2"	9264	13.59	63'-1½"	9276	13.72
	10												
	12	64'-7"	8754	15.06	64'-5"	8736	14.77	63'-1¾"	8717	14.46	63'-10	8736	14.76
	14												

DESIGN No. 2 ~ 5' TO 10' COVER

Clear Span	Clear Height	Triple Opening Boxes P	Triple Reinf. Steel Lbs.	Triple Conc. Cu.Yds.	Unit A3 P_A	Unit A3 Reinf. Steel Lbs.	Unit A3 Conc. Cu.Yds.	Unit I3 P_I	Unit I3 Reinf. Steel Lbs.	Unit I3 Conc. Cu.Yds.	Unit B3 P_B	Unit B3 Reinf. Steel Lbs.	Unit B3 Conc. Cu.Yds.
4	2												
	3												
	4												
6	2												
	3												
	4	29'-1"	1346	6.28	29'-0½"	1340	6.17	28'-3½	1331	6.01	28'-4"	1338	6.12
	5	29'-1"	1710	6.41	29'-0¼	1705	6.30	28'-3½	1695	6.11	28'-4	1702	6.23
	6	29'-1"	1618	6.55	29'-0¼	1673	6.42	28'-3½	1663	6.22	28'-4	1670	6.35
8	4	37'-6¾	3129	7.96	37'-6½	3120	7.85	36'-9¼	3109	7.65	36'-9¾	8118	7.79
	5												
	6	37'-6¾"	3101	8.22	37'-6½	3093	8.10	36'-9¼	3081	7.89	36'-9¾"	3089	8.03
	7	38'-0	3218	8.56	38'-0	3210	8.43	37'-3	3199	8.21	37'-3"	3207	8.34
	8												
10	4	46'-0½	4565	9.63	46'-0¼	4555	9.53	45'-3"	4539	9.36	45'-3½	4550	9.47
	5	46'-0½	4286	9.77	46'-0¼	4679	9.65	45'-3"	4664	9.46	45'-3½	4673	9.59
	6												
	7	46'-5¾"	5186	10.23	46'-6"	5177	10.11	45'-8¾	5162	9.89	45'-8¾	5171	10.02
	8	46'-11	5199	10.60	46'-11½	5190	10.43	46'-2¼	5175	10.24	46'-2"	5185	10.37
	9												
	10	47'-5¼"	5082	11.23	47'-5¼	5072	11.07	46'-8"	5058	10.19	46'-8¼	5067	10.96
	11												
	12												
12	6												
	8	55'-5"	7576	12.28	55'-5½	7564	12.16	54'-8¼"	7545	11.92	54'-8"	7557	12.04
	10	55'-11"	7527	12.90	55'-11"	7515	12.74	55'-1"	7493	12.38	55'-2"	7508	12.54
	12	56'-3¼"	7831	13.50	56'-2"	7816	13.24	55'-4¾"	7797	12.93	55'-6¼"	7813	13.20
14	8												
	10												
	12												
	14												

"One Skew End" Includes parapet, cutoff and barrel beyond length 'L'. All quantities listed above are for one skew end. Reinforcing steel quantities also contain modification accounting for aa, bb, mm and nn bars near end of barrel.

BAR DETAILS

	B	
aa1, bb1 / mm1, nn1	decrease in increments of "C" inches to	
aax, bbx / mmx, nnx	B minus (X-1) C	
p1 & p2	P minus 3"	for Triple
p1	P_A minus 3"	for Unit A3
p2	P_A minus 10"	for Unit A3
p1 & p2	P_I minus 3"	for Unit I3
p1	P_B minus 3"	for Unit B3
p2	P_B plus 4"	for Unit B3
T-bars	L+ (1'-3" at ea. sk end)	For size & spa. See Serial CB-33

NUMBER OF BARS REQUIRED FOR ENTIRE CULVERT

a1, a3, b1, b3, m1 & n1 : 12 (L-R) ÷ Spacing.
a2, b2, m2 & n2 : 24 (L-R) ÷ Spacing.
aa, bb, mm & nn : one of each at each skew end. Mark aa1 to aax, bb1 to bbx, mm1 to mmx, nn1 to nnx.
c1 : (24L ÷ Spacing) + 2 at each skew end.
c2, d & e : (24L ÷ Spacing) ...
c3 & c4 : (48L ÷ Spacing) plus 4 at each skew end.
p1 & p2 : 6 of each at each skew end.
j & k : 4 of each at each skew end.
f, g & h : See Table on this sheet.
T-bars : See Serial CB-33.
B = Length of Barrel along axis of box in ft.
R = (1½S + TS) for one skew end.
R = (3S + 2TS) for two skew ends.
For details of bars not shown on this sheet, see Serial CB-33.
Cut reinforcing bars to nearest 1" length. Use shorter length when detailed length falls at ½".

△ ESTIMATED QUANTITIES

Calculate quantities from notes 4 and 5 on Serial CB-33 taking quantities per lin. ft. from Serial CB-33 & quantities for skew ends from this sheet.
For details of barrel, general notes and design data see Serial CB-33.

p-bars which are detailed over 40 feet long may be spliced at or near the center of the overall length by lapping at least 20 bar diameters. Pay weight for reinforcing steel does not include these splices. Cost of splice material to be included in unit price bid for reinforcing steel.

PLAN VIEWS ON THIS SHEET SHOW END FOR R.F. SKEW. FOR PROPER DIRECTION OF SKEW SEE ROAD PLANS.

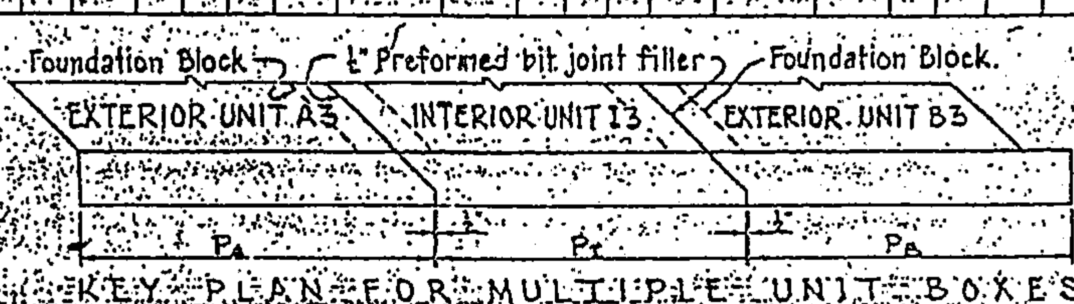

KEY PLAN FOR MULTIPLE UNIT BOXES

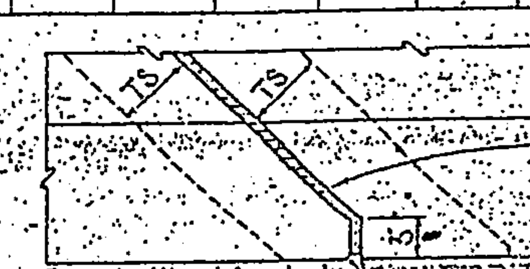

DETAIL OF JOINT BETWEEN UNITS

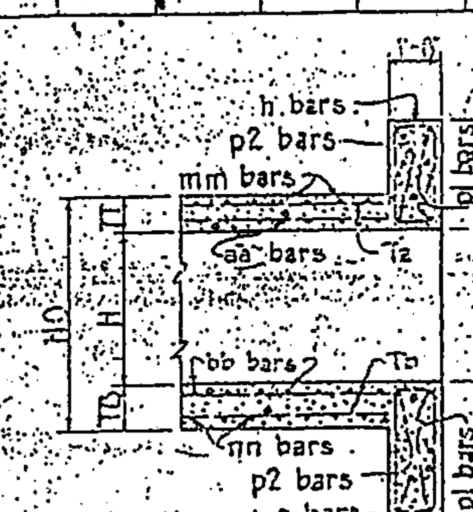

SECTION A-A

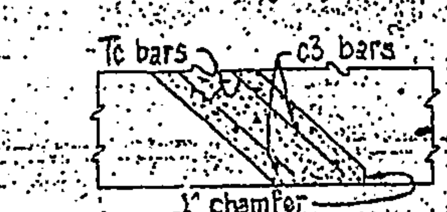

PART SECTION C-C

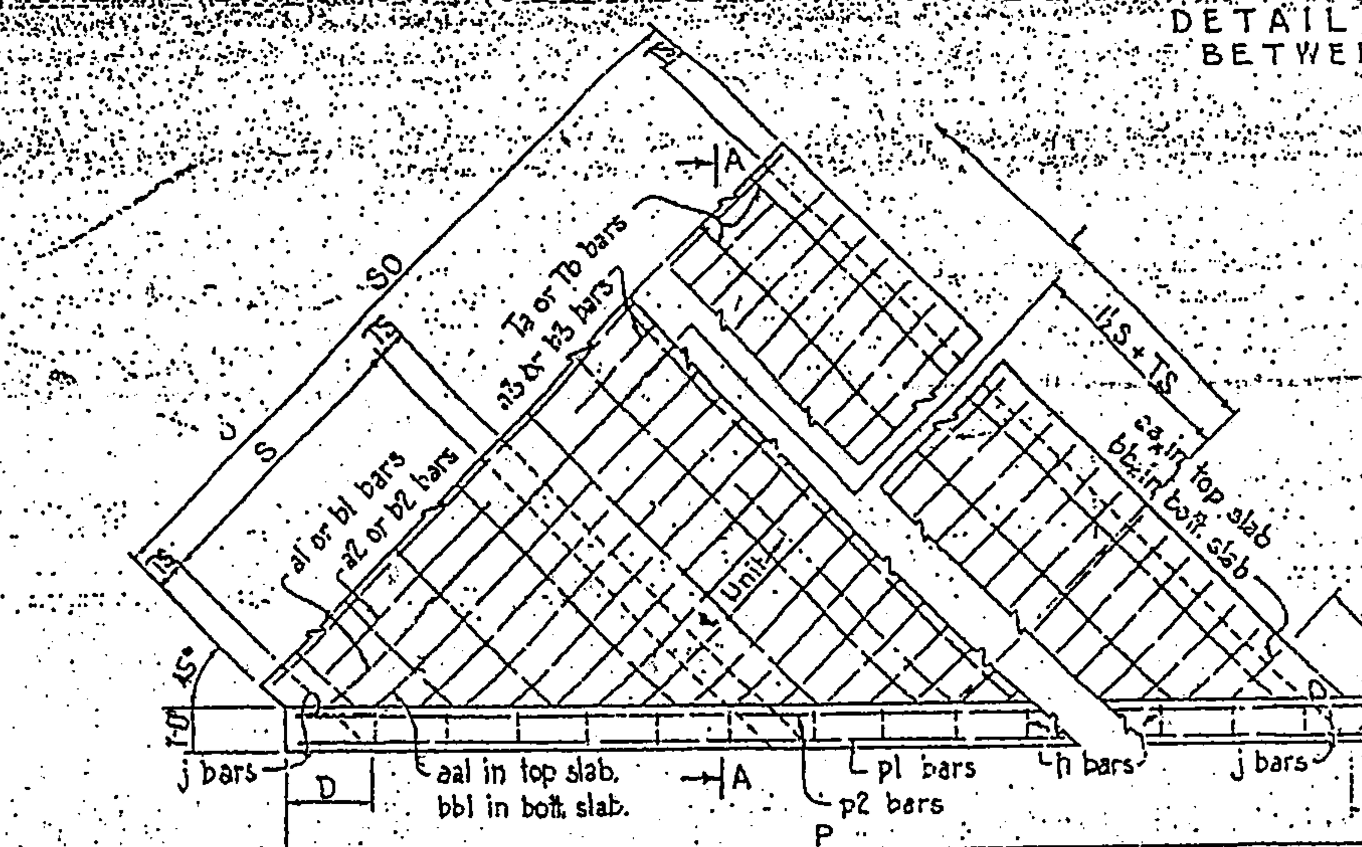

D = 1.414 TS + (1'-0")
(Use TS in inches)
PART PLAN
Showing position of aa & bb bars and reinforcing in parapet.

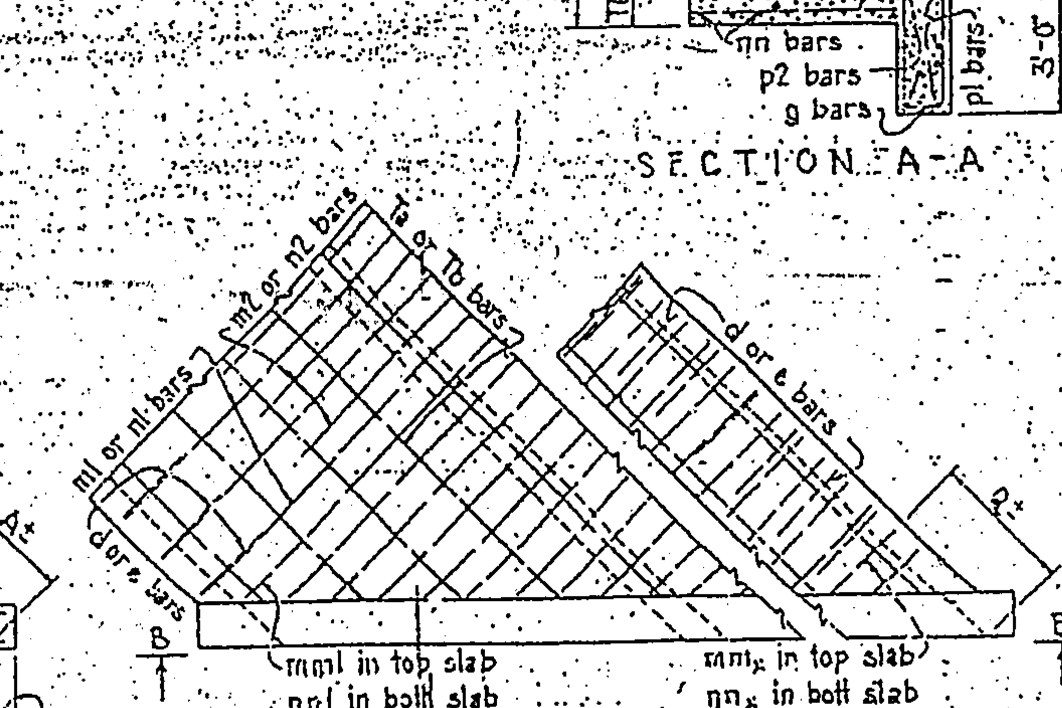

PART PLAN
Showing position of mm and nn bars.

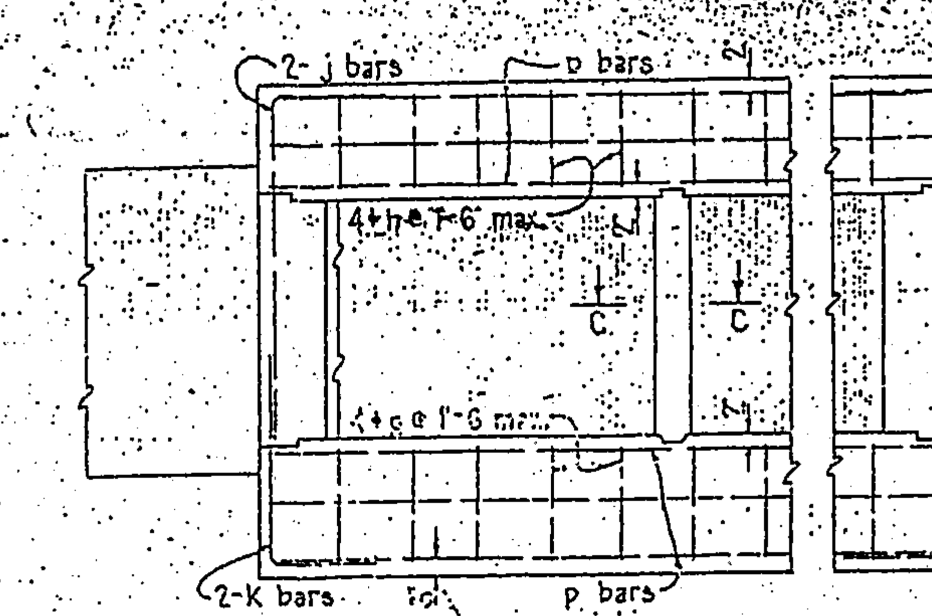

VIEW B-B

IDENT. NO.	EST. QTY. NOTE REFERENCE / DESCRIPTION	DATE	BY
△		6-17-94	PH

REVISIONS (OR CHANGE NOTICES)

NEW MEXICO
STATE HIGHWAY DEPARTMENT
CONCRETE BOX CULVERT BARRELS
TRIPLE OPENING ~ 45° SKEW
DESIGN No. 1 & 2
Sheet 1 of 2
SERIAL CB-33.45

Designed by J.I.T. 2-61 Checked by HAS 2-61
Detailed by R.H. 2-61 Checked by W.J.C. 2-61

REVISIONS: 5-62, 6-62, 7-62, 8-62, 9-62, 6-72, 11-73, 4-74, 2-3-82, 5-12-86 PZ, 6-20-94 TH

Clear Span	Clear Height

AS BUILT INFORMATION
CONTRACTOR
WORK STAKED BY Cartesian Surveys Inc. DATE 2008
INSPECTOR'S ACCEPTANCE BY DATE
FIELD VERIFICATION BY Cartesian Surveys Inc. DATE 2008
DRAWINGS CORRECTED BY DATE
MICRO-FILM INFORMATION
RECORDED BY DATE
NO.

BENCH MARKS
STATION "TRANS" IS LOCATED 6 M. SOUTHEAST OF DOWNTOWN ALBUQUERQUE, IN THE R.O.W. OF A PLAINS ELECTRIC CO-OP TRANSMISSION LINE. TO REACH STATION FROM INTERSECTION OF CENTRAL AVE. & 98TH ST. SW, GO SOUTH ON 98TH ST. 1.2 MI. TO JUNCTION WITH GIBSON BLVD. & SNOW VISTA BLVD., THEN SOUTHEAST ALONG SNOW VISTA AND CO-OP ELECTRIC TRANSMISSION LINE 0.85 MI. TO PYLON NUMBERED "52". STATION IS JUST EAST OF THIS POINT.
X = 354,899.45, Y = 1,471,822.67, ELEV. = 5118.37 (NAVD29)

SURVEY INFORMATION
FIELD NOTES
NO.	BY	DATE

ENGINEER'S SEAL
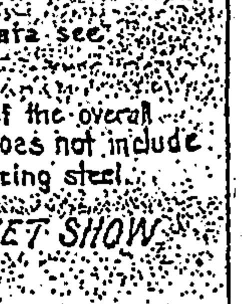

REVISIONS
NO.	DATE	REMARKS	BY

DESIGN
		DATE	
DESIGNED BY	JDH	DATE	05/04
DRAWN BY	DER	DATE	05/04
CHECKED BY	DMG	DATE	05/04

dmg MARK GOODWIN & ASSOCIATES, P.A.
CONSULTING ENGINEERS
P.O. BOX 90606
ALBUQUERQUE, NEW MEXICO 87199
(505) 828-2200, FAX (505) 797-9539

ALBUQUERQUE METROPOLITAN ARROYO FLOOD CONTROL AUTHORITY

TITLE: AMOLE CHANNEL - PHASE III (98TH STREET CROSSING) NMSHTD TRIPLE CBC 45° SKEW

DESIGN REVIEW COMMITTEE	CITY ENGINEER APPROVAL	MO./DAY/YR.	MO./DAY/YR.

LAST DESIGN UPDATE

CITY PROJECT NO.	ZONE MAP NO.	SHEET	OF
#	N-9	20	23

RECORD DRAWINGS

HDR ENGINEERING INC.

Federal Aid Project No.	State	Fiscal Year	Sheet No.	Total Sheets
9	NEW MEXICO			

DESIGN DATA

Design according to AASHO Spec's, 1957.
Unit Stresses: Reinforced Concrete: $f_c = 1200$ #/□"; $f_s = 20{,}000$ #/□"; $n = 10$
Horizontal earth pressure = 44.5 # equivalent fluid pressure (sloping surcharge.)

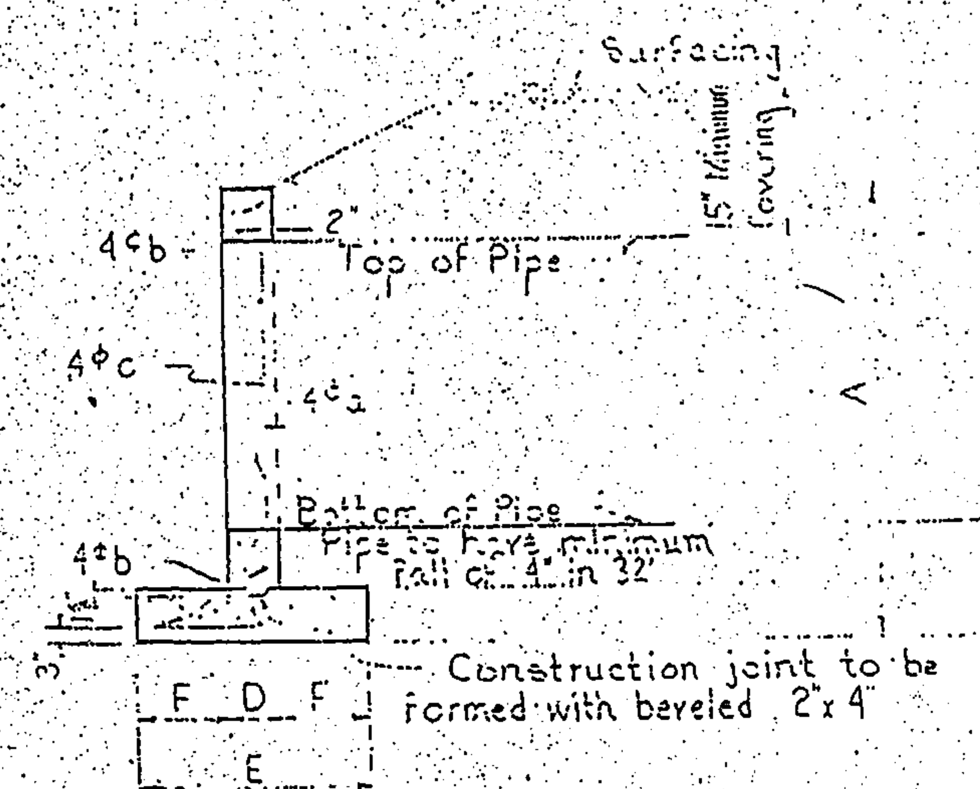

SECTION A-A
(TYPICAL ALONG ℄ OF CORRUGATED METAL PIPE)

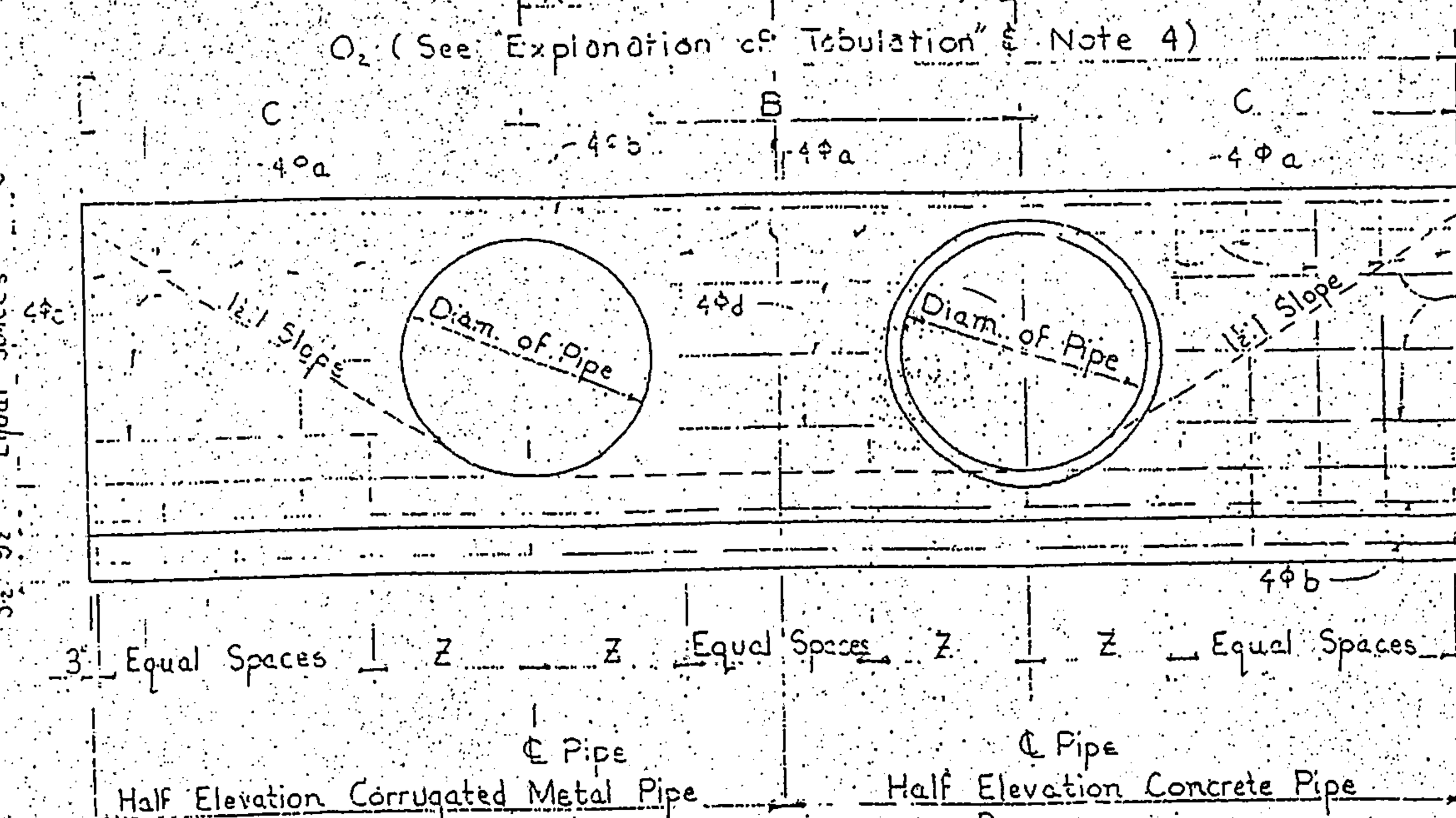

ELEVATION - HEADWALL FOR DOUBLE CULVERT

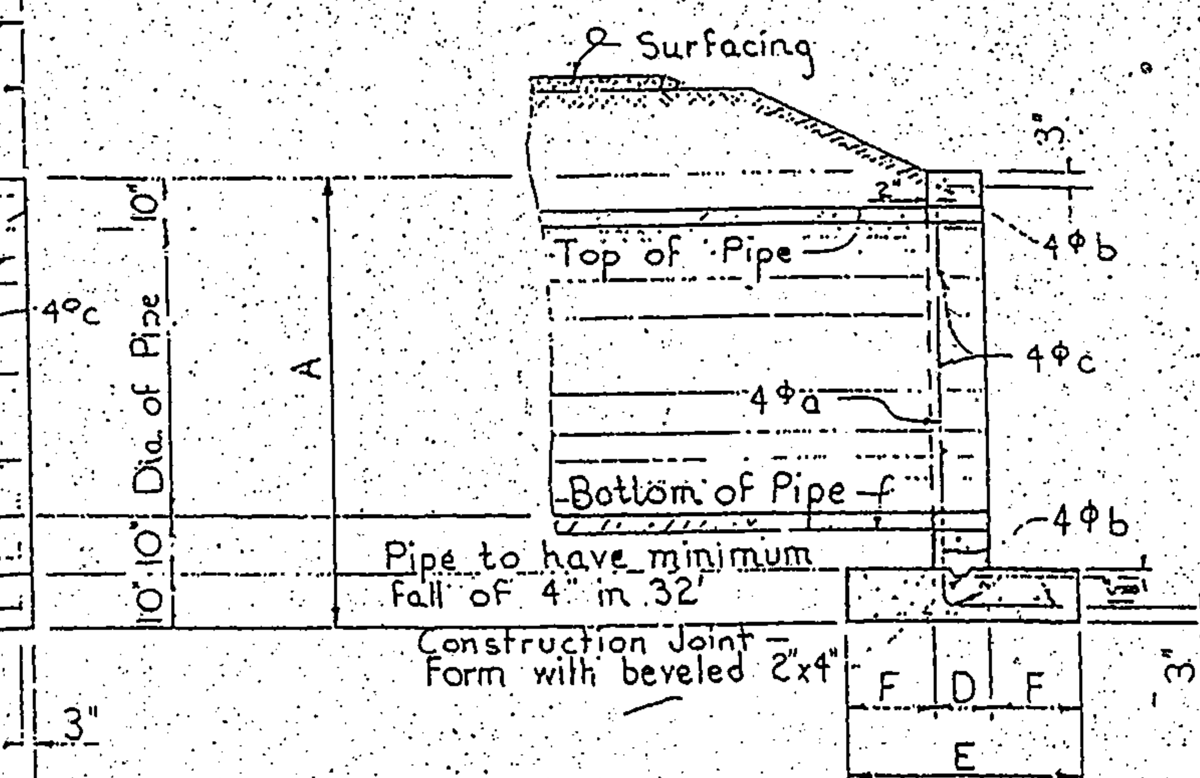

SECTION B-B
(TYPICAL ALONG ℄ OF CONCRETE PIPE)

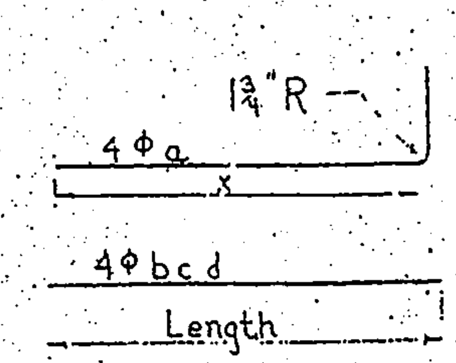

BAR BENDING DIAGRAMS
(See table for bars required).

GENERAL NOTES

1. Workmanship and materials to conform to NMSHTD Standard Specifications.
2. Design based on a minimum concrete compressive strength of 3000 pounds per square inch at 28 days. Chamfer all exposed edges ¾" unless noted otherwise.
3. All reinforcing steel to be deformed bars, conforming to AASHTO M-31, Grade 60. All dimensions refer to the centerline of bar.
4. While the details on this drawing are for a typical culvert with 2 pipes, this drawing applies to culvert headwalls with any number of pipes. The central portion of the wall of length "B" is repeated as many times as required by the number of pipes.

CONCRETE HEADWALLS

Bar spacings shown are approximate only.

Quantities shown are for two headwalls.

Diam. of Pipe	DIMENSIONS							REQUIRED FOR TWO HEADWALLS WITH ONE PIPE													ADD FOR EACH ADDITIONAL PIPE							Diam. of Pipe
								4φa bars					4φb		4φc bars			Quantities			4φa	4φd bars			Quantities			
	A	B	C	D	E	F	O_1	No.	Length	x	Spacing	Z	No.	Length	No.	Length	Spacing	Reinforcing Steel-lbs.	Concrete-Cu. Yds. C.P.C.	Concrete-Cu. Yds. C.M.C.	No.	No.	Length	Spacing	Reinforcing Steel-lbs.	Concrete-Cu. Yds. C.P.C.	Concrete-Cu. Yds. C.M.C.	
18"	4'-0"	3'-0"	3'-3"	8"	2'-2"	9"	6'-6"	12	4'-6"	3'-5"	1'-0"	1'-1"	8	O_n-3"	4	2'-0"	1'-4"	75	1.74	1.80	4	2	1'-0"	1'-4"	29	0.73	0.78	18"
24"	4'-6"	4'-0"	4'-0"	8"	2'-2"	9"	8'-0"	12	5'-0"	3'-11"	1'-3"	1'-4½"	8	O_n-3"	4	2'-6"	1'-7"	88	2.28	2.36	4	2	1'-3"	1'-7"	36	1.02	1.10	24"
30"	5'-0"	5'-0"	4'-9"	8"	2'-6"	11"	9'-6"	12	5'-9"	4'-5"	1'-5"	1'-8"	8	O_n-3"	8	3'-3"	1'-3"	113	3.05	3.18	4	4	1'-9"	1'-3"	47	1.43	1.56	30"
36"	5'-6"	6'-0"	5'-9"	8"	2'-8"	1'-0"	11'-6"	16	6'-3"	4'-11"	1'-2"	1'-1½"	8	O_n-3"	8	4'-0"	1'-5"	148	4.02	4.19	6	4	2'-3"	1'-5"	63	1.85	2.02	36"
42"	6'-0"	7'-0"	6'-6"	10"	3'-0"	1'-1"	13'-0"	16	7'-0"	5'-5"	1'-4"	2'-3"	8	O_n-3"	8	4'-6"	1'-6"	167	5.68	5.96	6	4	2'-9"	1'-6"	73	2.65	2.93	42"
48"	6'-6"	8'-0"	7'-3"	10"	3'-4"	1'-3"	14'-6"	20	7'-9"	5'-11"	1'-2"	2'-6½"	8	O_n-3"	12	4'-9"	1'-3"	218	6.92	7.28	6	6	3'-0"	1'-3"	86	3.31	3.67	48"
54"	7'-0"	9'-0"	8'-0"	10"	3'-6"	1'-4"	16'-0"	24	8'-3"	6'-5"	1'-0"	2'-10"	8	O_n-3"	12	5'-0"	1'-5"	257	8.12	8.57	8	6	3'-6"	1'-5"	106	3.95	4.39	54"
60"	7'-6"	10'-0"	8'-9"	10"	3'-9"	1'-5½"	17'-6"	28	9'-0"	6'-11"	0'-11"	3'-1½"	8	O_n-3"	12	5'-6"	1'-6½"	305	9.51	10.04	10	6	3'-9"	1'-6½"	129	4.68	5.22	60"

EXPLANATION OF TABULATION

$O_1 = 2C$ $O_2 = 2C + B$
$O_3 = 2C + 2B$ $O_n = 2C + (n-1)B$
Where n = number of pipes

Ident. No.	Description	Date	By
3	REVISED NOTE #1, #3	6-10-94	PH
1	General Serial Revision	4/6/61	CA

REVISIONS (OR CHANGE NOTICES)

NEW MEXICO
STATE HIGHWAY DEPARTMENT

PIPE CULVERT HEADWALLS

SERIAL H-1-61

APPROVED: ... 4-6-61
Checked by: J.A.S. 2-13-61
R.W. 2-61

MARK GOODWIN & ASSOCIATES, P.A.
CONSULTING ENGINEERS
P.O. BOX 90606
ALBUQUERQUE, NEW MEXICO 87199
(505) 828-2200, FAX (505) 797-9539

AS BUILT INFORMATION		
CONTRACTOR		
WORK STAKED BY Cartesian Surveys Inc.	DATE	2005
INSPECTOR'S ACCEPTANCE BY	DATE	
FIELD VERIFICATION BY Cartesian Surveys Inc.	DATE	2008
DRAWINGS CORRECTED BY	DATE	
MICRO-FILM INFORMATION		
RECORDED BY	DATE	
NO.		

BENCH MARKS

STATION "TRANS" IS LOCATED 6 MI. SOUTHWEST OF DOWNTOWN ALBUQUERQUE, IN THE R.O.W. OF A PLAINS ELECTRIC CO-OP TRANSMISSION LINE. TO REACH STATION FROM INTERSECTION OF CENTRAL AVE. & 98TH ST. SW, GO SOUTH ON 98TH ST. 1.2 MI. TO JUNCTION WITH GIBSON BLVD. & SNOW VISTA BLVD. THEN SOUTHEAST ALONG SNOW VISTA AND CO-OP ELECTRIC TRANSMISSION LINE 0.85 MI. TO PYLON NUMBERED "52". STATION IS JUST EAST OF THIS POINT.
X = 354,899.45, Y = 1,471,822.67, ELEV. = 5118.37 (NAVD29)

SURVEY INFORMATION — FIELD NOTES: NO. | BY | DATE

ENGINEER'S SEAL

NO.	DATE	REMARKS	BY
		REVISIONS	
		DESIGN	
DESIGNED BY	JDH	DATE	05/04
DRAWN BY	DER	DATE	05/04
CHECKED BY	DMG	DATE	05/04

ALBUQUERQUE METROPOLITAN ARROYO FLOOD CONTROL AUTHORITY

TITLE: AMOLE CHANNEL (98TH STREET CROSSING) NMSHTD PIPE CULVERT HEADWALLS

DESIGN REVIEW COMMITTEE | CITY ENGINEER APPROVAL | MO./DAY/YR. | MO./DAY/YR. | LAST DESIGN UPDATE

CITY PROJECT NO. 756291 | ZONE MAP NO. N-9 | SHEET 21 OF 25

A04jobs\A4009SNH\Amole Channel plans 2\98th Snow Vista Phase3\4009-98X-Sheet 21 11-18-05 NHE TAS

F:\A04JOBS\A4009SNH\Amole Channel plans 2\98th Snow Vista Phase3\4009-98X-Sheet 21.dwg, Layout1, 11/18/2005 1:28:19 PM
Tim

RECORD DRAWINGS
HDR ENGINEERING INC.
Tim Archer 16678 4-13-2007
Engineers Name NMPE No. Date

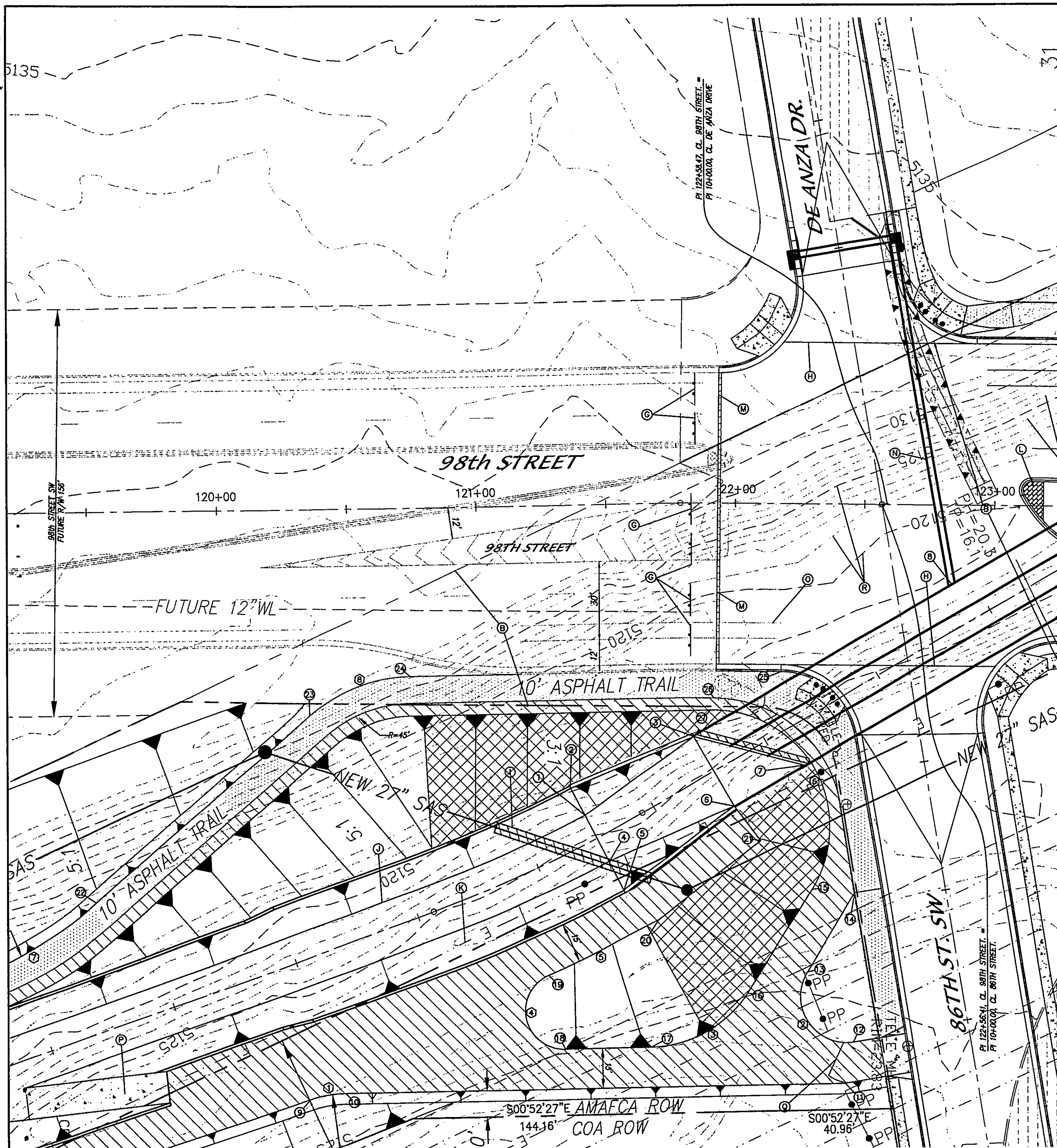

LEGEND:

- TINTED BRICK PATTERN CONCRETE MEDIAN PAVEMENT COA STD DWG 2408
- MAINTENANCE ROAD ASPHALT 15' WIDE COA STD DWG 2415B
- ASPHALT TRAIL 10' WIDE, 2" THICK COA STD DWG 2415B
- NATIVE SEED & GRAVEL MULCH SLOPE AREA ALONG TRAIL 3:1 OR STEEPER
- PAVED SECTION TO BE REMOVED
- RIP-RAP TO BE REMOVED / REUSED
- RIP-RAP TO BE PLACED
- NEW CONCRETE THIS PROJECT
- EXIST 10' WIDE A.C. TRAIL
- RETAINING WALL W/RAILING PER DETAILS SHEETS 7, 8 & 9

(#) AMOLE CONCRETE CHANNEL

ALL STATIONING IS CHANNEL CENTERLINE STATIONING

NUMBER	STATION	OFFSET	LOCATION
1	72+25.26	10.00 LT	CHANNEL FL
2	72+25.26	22.20 LT	CHANNEL TOP
3	72+77.28	15.50 LT	CHANNEL TW/FL
4	72+25.26	10.16 RT	CHANNEL FL
5	72+25.26	22.60 RT	CHANNEL TOP
6	72+77.28	10.00 LT	CHANNEL TW/FL
7	73+08.45	15.50 LT	CHANNEL TW/FL
8	73+92.13	15.50 LT	24" SD RCP PIPE
9	70+87.51	51.29 RT	MAINT. ROAD
10	71+00.90	53.66 RT	MAINT. ROAD
11	72+61.22	128.73 RT	MAINT. ROAD
12	72+71.93	116.74 RT	MAINT. ROAD
13	72+69.96	83.94 RT	MAINT. ROAD
14	73+00.88	67.81 RT	MAINT. ROAD
15	72+86.92	58.18 RT	MAINT. ROAD
16	72+45.94	79.56 RT	MAINT. ROAD
17	72+09.18	80.58 RT	MAINT. ROAD
18	71+82.68	67.51 RT	MAINT. ROAD
19	71+87.69	38.60 RT	MAINT. ROAD
20	72+31.39	38.60 RT	MAINT. ROAD
21	72+79.28	32.31 RT	MAINT. ROAD
22	70+35.54	46.97 LT	10' ASPHALT TRAIL
23	71+37.36	86.93 LT	10' ASPHALT TRAIL
24	71+83.48	87.22 LT	10' ASPHALT TRAIL
25	73+18.73	19.92 LT	10' ASPHALT TRAIL
26	72+91.53	24.43 LT	10' ASPHALT TRAIL
27	72+88.02	21.02 LT	10' ASPHALT TRAIL

CURVE TABLE

#	LENGTH	RADIUS	DELTA	TANGENT	CHORD BRG	CHORD
1	13.65	45.00	17°23'03"	6.88	S09°43'21"E	13.60
2	41.40	18.00	131°46'46"	40.22	N56°37'09"E	32.86
3	44.34	45.00	56°27'39"	24.16	N29°15'39"W	42.57
4	41.29	15.00	157°42'14"	76.12	N77°49'18"E	29.43
5	47.07	538.60	5°00'28"	23.55	N25°49'49"W	47.06
6	96.85	45.00	123°18'30"	83.41	S60°51'17"W	79.21
7	56.10	150.00	21°25'39"	28.38	N30°28'09"W	55.77
8	42.29	60.00	40°23'00"	22.07	S20°59'28"E	41.42

NOTES

1. ALL STATIONING IS CENTERLINE STATIONING.
2. ALL HANDICAP RAMPS TO BE CASE I PER CITY OF ALBUQUERQUE STD. DWG. 2441, UNLESS OTHERWISE INDICATED. WHERE GRADES DO NOT PERMIT A MAXIMUM SLOPE OF 12:1 TO BE MAINTAINED WITHIN THE 7' LENGTH AS SPECIFIED THE THE "F" LENGTH AS SHOWN IN DWG. 2441 SHALL BE INCREASED TO MAINTAIN A SLOPE ,12:1.
3. ALL EXCAVATION, TRENCHING AND SHORING ACTIVITIES MUST BE CARRIED-OUT IN ACCORDANCE WITH OSHA 29 CFR 1926.650 SUBPART P.

KEYED NOTES:

- (A) EXISTING 200' CITY OF ALBUQUERQUE RIGHT OF WAY
- (B) EXISTING AMAFCA RIGHT OF WAY TO BE QUIT CLAIMED TO THE CITY OF ALBUQUERQUE.
- (C) EXISTING 150' CITY OF ALBUQUERQUE RIGHT OF WAY TO BE VACATED & DEDICATED TO AMAFCA.
- (D) EXISTING 135' WIDE RIGHT OF WAY (SNOW VISTA DIVERSION CHANNEL).
- (E) EXISTING AC CURB & AC PAVEMENT TO BE REMOVED & DISPOSED
- (F) EXISTING AC CURB, AC PAVEMENT & AC TRAIL TO BE REMOVED & DISPOSED
- (G) TYPE III BARRICADES
- (H) TRANSITION 6" TO 8" ASPHALTIC CONCRETE
- (I) NEW 27" SAS LINE CONCRETE ENCASED
- (J) AMOLE CONCRETE CHANNEL, SEE SHEET 24 & 25 FOR CROSS SECTIONS
- (K) EXIST ELECTRIC LINE TO BE REMOVED
- (L) TINTED BRICK PATTERN CONCRETE MEDIAN PAVEMENT
- (M) LIMITS OF THIS PROJECT
- (N) 24" RCP SD PIPE, TO BE CONNECTED TO AMOLE CHANNEL
- (O) 4" REFLECTORIZED PLASTIC STRIPING PER STRIPING PLAN SEE SHEET 10 OF 25
- (P) 12' WIDE CONCRETE SERVICE RAMP SLOPE TO BASE OF CONCRETE CHANNEL
- (Q) METAL PIPE GATE
- (R) EXISTING CONTOURS

Certification
THE CHANGES SHOWN HEREON ARE BASED UPON A FIELD SURVEY CONDUCTED BY ME OR UNDER MY SUPERVISION AND REFLECT THE LOCATIONS (VERTICALLY AND HORIZONTALLY) TO THE BEST OF MY KNOWLEDGE AND BELIEF.

PROFILE LEGEND
- CURB FL
- MEDIAN FL
- AMOLE CHANNEL WALL

SCALE: 1" = 20'
AMOLE CHANNEL
STA. 119+00 TO STA. 131+50

AS BUILT INFORMATION	
CONTRACTOR	DATE 2003
WORK STAKED BY Cartesian Surveys Inc.	DATE
INSPECTOR'S ACCEPTANCE BY	DATE
FIELD VERIFICATION BY Cartesian Surveys Inc.	DATE 2008
DRAWINGS CORRECTED BY	DATE

MICRO-FILM INFORMATION
RECORDED BY DATE
NO.

BENCH MARKS
STATION "TRANS" IS LOCATED 6 MI. SOUTHWEST OF DOWNTOWN ALBUQUERQUE, IN THE R.O.W. OF A PLAINS ELECTRIC CO-OP TRANSMISSION LINE. TO REACH STATION FROM INTERSECTION OF CENTRAL AVE. & 98TH ST. SW, GO SOUTH ON 98TH ST. 1.2 MI. TO JUNCTION WITH GIBSON BLVD. & SNOW VISTA BLVD., THEN SOUTHEAST ALONG SNOW VISTA AND CO-OP ELECTRIC TRANSMISSION LINE 0.85 MI. TO PYLON NUMBERED "52". STATION IS JUST EAST OF THIS POINT.
X = 354,899.45, Y = 1,471,822.67, ELEV. = 5118.37 (NAVD29)

SURVEY INFORMATION
FIELD NOTES
NO. BY DATE

ENGINEER'S SEAL
JAMES D. HUGHES NEW MEXICO 7634 REGISTERED PROFESSIONAL ENGINEER
12-7-05

NO.	DATE	REMARKS	BY
		REVISIONS	
		DESIGN	
DESIGNED BY	G/K	DATE	02/00
DRAWN BY	TAS	DATE	02/00
CHECKED BY	DMG	DATE	02/00

MARK GOODWIN & ASSOCIATES, P.A.
CONSULTING ENGINEERS
P.O. BOX 90606
ALBUQUERQUE, NEW MEXICO 87199
(505) 828-2200, FAX (505) 797-9539

ALBUQUERQUE METROPOLITAN
ARROYO FLOOD CONTROL AUTHORITY

TITLE: AMOLE CHANNEL - PHASE III
98TH STREET S.W.
CHANNEL IMPROVEMENTS

DESIGN REVIEW COMMITTEE: APPROVED JAN - 9 2006 DESIGN REVIEW COMMITTEE
CITY ENGINEER APPROVAL: APPROVED JAN - 9 2006 CITY ENGINEER
LAST DESIGN UPDATE MO./DAY/YR. MO./DAY/YR.

CITY PROJECT NO. 756291 | ZONE MAP NO. N-9 | SHEET 22 OF 25

A04JOBS/A4009SNH/Amole Channel plans 2/98th Snow Vista Phase3/98th Amole Channel (Layout 1) 11-18-05 TAS RDQ

RECORD DRAWINGS
HDR ENGINEERING INC.
Tim Asch · 16378 4-13-2007
Engineers Name · NMPE No. · Date

RECORD DRAWINGS

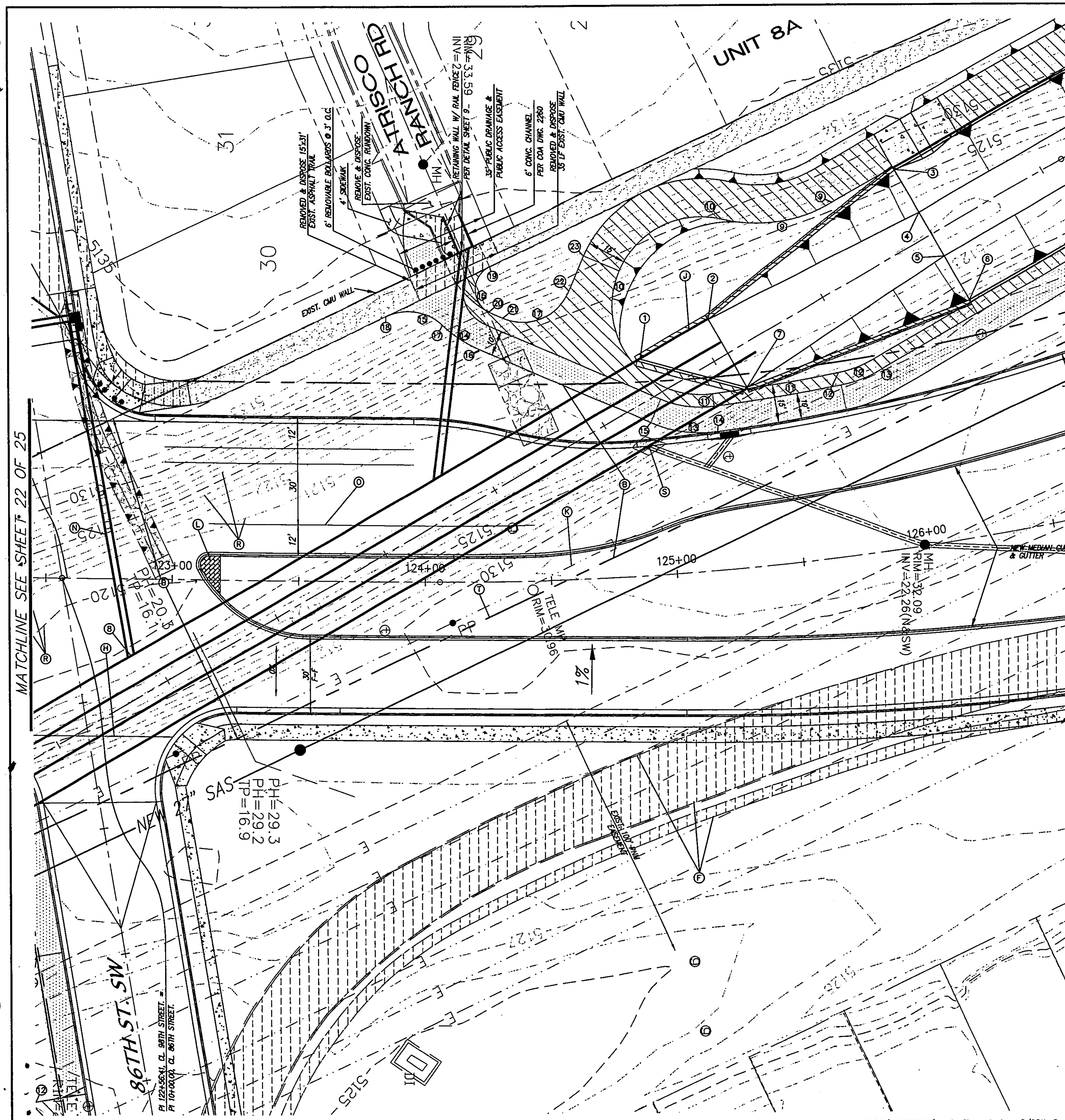

LEGEND:

- TINTED BRICK PATTERN CONCRETE MEDIAN PAVEMENT COA STD DWG 2408
- MAINTENANCE ROAD ASPHALT 15' WIDE COA STD DWG 2415B
- ASPHALT TRAIL 10' WIDE, 2" THICK COA STD DWG 2415B
- NATIVE SEED & GRAVEL MULCH SLOPE AREA ALONG TRAIL 3:1 OR STEEPER
- PAVED SECTION TO BE REMOVED
- RIP-RAP TO BE REMOVED / REUSED
- RIP-RAP TO BE PLACED
- NEW CONCRETE THIS PROJECT
- EXIST 10' WIDE A.C. TRAIL
- RETAINING WALL W/RAILING PER DETAILS SHEETS 7, 8 & 9

NOTES

1. ALL STATIONING IS CENTERLINE STATIONING.
2. ALL HANDICAP RAMPS TO BE CASE I PER CITY OF ALBUQUERQUE STD. DWG. 2441, UNLESS OTHERWISE INDICATED. WHERE GRADES DO NOT PERMIT A MAXIMUM SLOPE OF 12:1 TO BE MAINTAINED WITHIN THE 7' LENGTH AS SPECIFIED THE THE "T" LENGTH AS SHOWN IN DWG. 2441 SHALL BE INCREASED TO MAINTAIN A SLOPE ,12:1.
3. ALL EXCAVATION, TRENCHING AND SHORING ACTIVITIES MUST BE CARRIED-OUT IN ACCORDANCE WITH OSHA 29 CFR 1926.650 SUBPART P.

KEYED NOTES:

- (A) EXISTING 200' CITY OF ALBUQUERQUE RIGHT OF WAY
- (B) EXISTING AMAFCA RIGHT OF WAY TO BE QUIT CLAIMED TO THE CITY OF ALBUQUERQUE.
- (C) EXISTING 150' CITY OF ALBUQUERQUE RIGHT OF WAY TO BE VACATED & DEDICATED TO AMAFCA.
- (D) EXISTING 135' WIDE RIGHT OF WAY (SNOW VISTA DIVERSION CHANNEL).
- (E) EXISTING AC CURB & AC PAVEMENT TO BE REMOVED & DISPOSED
- (F) EXISTING AC CURB, AC PAVEMENT & AC TRAIL TO BE REMOVED & DISPOSED
- (G) TYPE III BARRICADES
- (H) TRANSITION 6" TO 8" ASPHALTIC CONCRETE
- (I) NEW 27" SAS LINE CONCRETE ENCASED
- (J) AMOLE CONCRETE CHANNEL, SEE SHEET 24 & 25 FOR CROSS SECTIONS
- (K) EXIST ELECTRIC LINE TO BE REMOVED
- (L) TINTED BRICK PATTERN CONCRETE MEDIAN PAVEMENT
- (M) LIMITS OF THIS PROJECT
- (N) 24" RCP SD PIPE, TO BE CONNECTED TO AMOLE CHANNEL
- (O) 4" REFLECTORIZED PLASTIC STRIPING PER STRIPING PLAN SEE SHEET 10 OF 25
- (P) 12' WIDE CONCRETE SERVICE RAMP SLOPE TO BASE OF CONCRETE CHANNEL
- (Q) METAL PIPE GATE
- (R) EXISTING CONTOURS
- (S) EXISTING 24" RCP SD PIPE, TO BE CONNECTED TO AMOLE CHANNEL
- (T) NEW 27" SAS LINE

AMOLE CONCRETE CHANNEL
ALL STATIONING IS CHANNEL CENTERLINE STATIONING

NUMBER	STATION	OFFSET	LOCATION
1	76+25.56	15.50 LT	CHANNEL TW/FL
2	76+56.56	15.50 LT	CHANNEL TW/FL
3	77+50.05	29.60 LT	CHANNEL TOP
4	77+50.05	10.00 LT	CHANNEL BASE
5	77+50.05	10.00 RT	CHANNEL BASE
6	77+50.05	30.00 RT	CHANNEL TOP
7	76+56.56	15.50 RT	CHANNEL TW/FL
8	73+92.13	15.50 LT	24" SD RCP PIPE
9	77+22.20	30.60 LT	MAINT. ROAD
10	76+80.90	47.08 LT	MAINT. ROAD
11	76+43.29	10.60 RT	MAINT. ROAD
12	76+90.89	28.61 RT	MAINT. ROAD
13	77+05.35	31.00 RT	MAINT. ROAD
14	76+37.49	24.43 RT	ASPHALT TRAIL
15	77+16.71	8.91 RT	ASPHALT TRAIL
16	75+72.78	50.76 LT	ASPHALT TRAIL
17	75+64.91	66.49 LT	ASPHALT TRAIL
18	75+47.35	80.77 LT	ASPHALT TRAIL
19	75+92.66	77.08 LT	ASPHALT TRAIL
20	75+83.44	61.70 LT	ASPHALT TRAIL
21	76+86.91	56.90 LT	ASPHALT TRAIL
22	76+41.90	52.82 LT	MAINT. ROAD
23	76+26.93	61.78 LT	MAINT. ROAD

CURVE TABLE

#	LENGTH	RADIUS	DELTA	TANGENT	CHORD BRG	CHORD
C9	45.55	60.00	43°29'58"	23.94	N08°11'33"W	44.47
C10	122.65	35.00	200°46'53"	190.88	S86°50'00"E	68.85
C11	50.91	734.37	3°58'18"	25.46	N09°12'35"W	50.89
C12	14.72	45.00	18°44'48"	7.43	N20°34'08"W	14.66
C13	26.69	50.00	30°35'09"	13.67	N08°04'08"E	26.38
C14	17.68	50.00	20°15'34"	8.93	N33°29'29"E	17.59
C15	24.05	20.00	68°54'31"	13.72	S09°10'00"W	22.63
C16	22.24	10.00	127°24'57"	20.24	S88°59'44"E	17.93
C17	31.42	20.00	90°00'00"	20.00	N21°38'18"W	28.28

Certification
THE CHANGES SHOWN HEREON ARE BASED UPON A FIELD SURVEY CONDUCTED BY ME OR UNDER MY SUPERVISION AND REFLECT THE LOCATIONS (VERTICALLY AND HORIZONTALLY) TO THE BEST OF MY KNOWLEDGE AND BELIEF.

SCALE: 1" = 20'
AMOLE CHANNEL
STA. 119+00 TO STA. 131+50

AS BUILT INFORMATION
CONTRACTOR
WORK STAKED BY Cartesian Surveys Inc. DATE 2006
INSPECTOR'S ACCEPTANCE BY DATE
FIELD VERIFICATION BY Cartesian Surveys Inc. DATE 2008
DRAWINGS CORRECTED BY DATE
MICRO-FILM INFORMATION
RECORDED BY DATE
NO.

BENCH MARKS
STATION "TRANS" IS LOCATED 6 MI. SOUTHWEST OF DOWNTOWN ALBUQUERQUE, IN THE R.O.W. OF A PLAINS ELECTRIC CO-OP TRANSMISSION LINE. TO REACH STATION FROM INTERSECTION OF CENTRAL AVE. & 98TH ST. SW, GO SOUTH ON 98TH ST. 1.2 MI. TO JUNCTION WITH GIBSON BLVD. & SNOW VISTA BLVD., THEN SOUTHEAST ALONG SNOW VISTA AND CO-OP ELECTRIC TRANSMISSION LINE 0.85 MI. TO PYLON NUMBERED "52". STATION IS JUST EAST OF THIS POINT.
X = 354,899.45, Y = 1,471,822.67, ELEV. = 5118.57 (NAVD29)

SURVEY INFORMATION
FIELD NOTES

NO.	BY	DATE

ENGINEER'S SEAL
JAMES D. HUGHES · NEW MEXICO · REGISTERED PROFESSIONAL ENGINEER
12-30-05

NO.	DATE	REMARKS	BY
		REVISIONS	
		DESIGN	
DESIGNED BY	GJK	DATE	02/00
DRAWN BY	TAS	DATE	02/00
CHECKED BY	DMG	DATE	02/00

dmg MARK GOODWIN & ASSOCIATES, P.A.
CONSULTING ENGINEERS
P.O. BOX 90606
ALBUQUERQUE, NEW MEXICO 87199
(505) 828-2200, FAX (505) 797-9539

ALBUQUERQUE METROPOLITAN
ARROYO FLOOD CONTROL AUTHORITY

TITLE: AMOLE CHANNEL - PHASE III
98TH STREET S.W.
CHANNEL IMPROVEMENTS

DESIGN REVIEW COMMITTEE · CITY ENGINEER APPROVAL · MO./DAY/YR. · MO./DAY/YR.
APPROVED JAN - 9 2006 CITY ENGINEER
APPROVED JAN - 9 2006 DESIGN REVIEW COMMITTEE
LAST DESIGN UPDATE

CITY PROJECT NO. 756291 · ZONE MAP NO. N-9 · SHEET 23 OF 25

A04JOBS/A4009SNH/Amole Channel plans 2/98th Snow Vista Phase3/98th Amole Channel (Layout 2) 12-01-05 TAS RDQ

RECORD DRAWINGS
HDR ENGINEERING INC.
Engineers Name: [signature] NMPE No. 16628 Date 4-12-2007

RECORD DRAWINGS

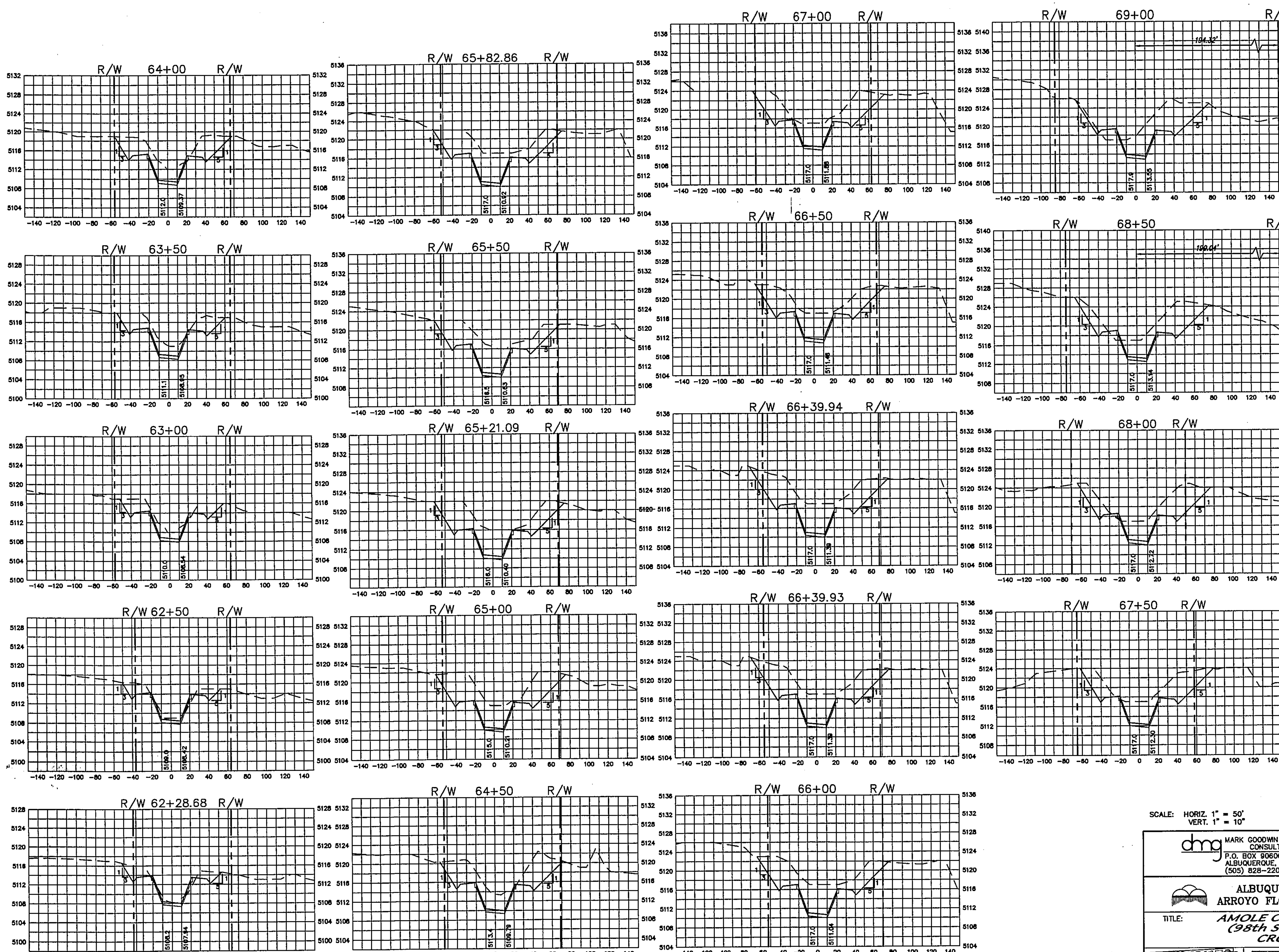

SCALE: HORIZ. 1" = 50'
VERT. 1" = 10"

dmg MARK GOODWIN & ASSOCIATES, P.A.
CONSULTING ENGINEERS
P.O. BOX 90606
ALBUQUERQUE, NEW MEXICO 87199
(505) 828-2200, FAX (505) 797-9539

ALBUQUERQUE METROPOLITAN
ARROYO FLOOD CONTROL AUTHORITY

TITLE: AMOLE CHANNEL - PHASE III
(98th STREET CROSSING)
CROSS SECTIONS

DESIGN REVIEW COMMITTEE — APPROVED JAN 9 2006 — CITY ENGINEER
CITY ENGINEER APPROVAL — APPROVED JAN - 9 2006 — DESIGN REVIEW COMMITTEE

CITY PROJECT NO.	ZONE MAP NO.	SHEET	OF
756291	N-9	24	25

NO.	DATE	REMARKS	BY
		REVISIONS	
		DESIGN	
DESIGNED BY	JDH	DATE	12/04
DRAWN BY	NHE	DATE	12/04
CHECKED BY	DMG	DATE	12/04

ENGINEER'S SEAL: JAMES D. HUGHES, NEW MEXICO 11574, REGISTERED PROFESSIONAL ENGINEER, 12-07-05

SURVEY INFORMATION
FIELD NOTES

NO.	BY	DATE

BENCH MARKS

STATION "TRANS" IS LOCATED 6 MI. SOUTHWEST OF DOWNTOWN ALBUQUERQUE, IN THE R.O.W. OF A PLAINS ELECTRIC CO-OP TRANSMISSION LINE. TO REACH STATION FROM INTERSECTION OF CENTRAL AVE. & 98TH ST. SW, GO SOUTH ON 98TH ST. 1.2 MI. TO JUNCTION WITH GIBSON BLVD. & SNOW VISTA BLVD., THEN SOUTHEAST ALONG SNOW VISTA AND CO-OP ELECTRIC TRANSMISSION LINE 0.85 MI. TO PYLON NUMBERED "52". STATION IS JUST EAST OF THIS POINT.
X = 354,899.45, Y = 1,471,822.67, ELEV. = 5118.37 (NAVD29)

AS BUILT INFORMATION

CONTRACTOR		
WORK STAKED BY	Cartesian Surveys Inc.	DATE 2006
INSPECTOR'S ACCEPTANCE BY		DATE
FIELD VERIFICATION BY	Cartesian Surveys Inc.	DATE 2006
DRAWINGS CORRECTED BY		DATE

MICRO-FILM INFORMATION

RECORDED BY	DATE
NO.	

A4009SNH/Amole Channel plans 2/98th Snow Vista Phase3/98X Cross-Sect-Base (Layout1) 11-16-05 NHE TAS

F:\A04JOBS\A4009SNH\Amole Channel plans 2\98th Snow Vista Phase3\98X Cross-Sect-base.dwg, 12/1/2005 2:53:49 PM, PLOTTED BY RDQ

RECORD DRAWINGS
HDR ENGINEERING INC.
Engineers Name NMPE No. 16628 Date

RECORD DRAWINGS

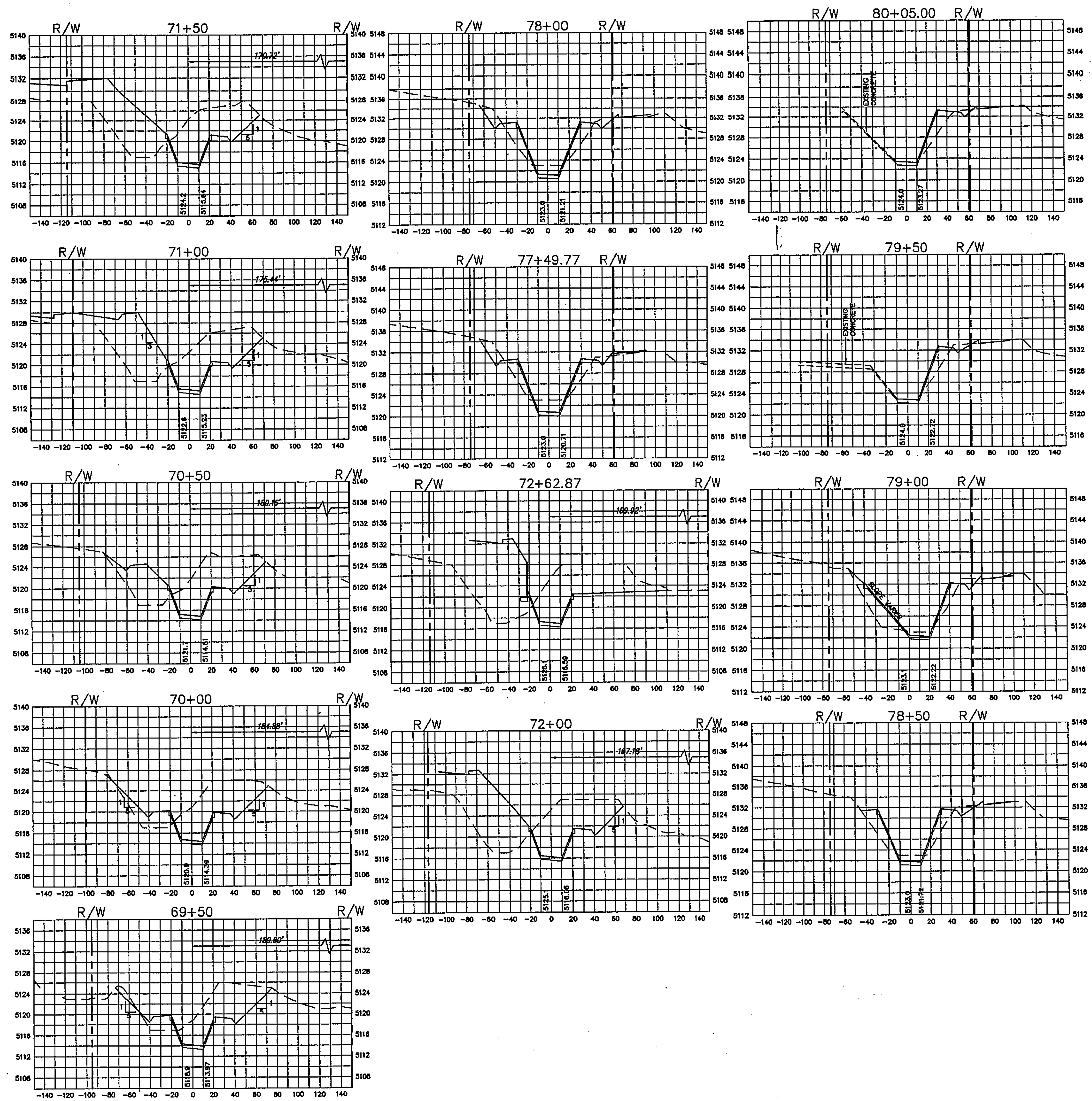

SCALE: HORIZ. 1" = 50'
VERT. 1" = 10'

dmg MARK GOODWIN & ASSOCIATES, P.A.
CONSULTING ENGINEERS
P.O. BOX 90606
ALBUQUERQUE, NEW MEXICO 87199
(505) 828-2200, FAX (505) 797-9539

ALBUQUERQUE METROPOLITAN ARROYO FLOOD CONTROL AUTHORITY

TITLE: AMOLE CHANNEL - PHASE III (98TH STREET CROSSING) CROSS SECTIONS

DESIGN REVIEW COMMITTEE — APPROVED JAN - 9 2006 — CITY ENGINEER

CITY ENGINEER APPROVAL — APPROVED JAN - 9 2006 — DESIGN REVIEW COMMITTEE

MO./DAY/YR.	MO./DAY/YR.
LAST DESIGN UPDATE	

CITY PROJECT NO.	ZONE MAP NO.	SHEET OF
756291	N-9	25 25

NO.	DATE	REMARKS	BY
		REVISIONS	
		DESIGN	
DESIGNED BY	JDH	DATE	12/04
DRAWN BY	NHE	DATE	12/04
CHECKED BY	DMG	DATE	12/04

ENGINEER'S SEAL

JAMES D. HUGHES, NEW MEXICO, 11674, REGISTERED PROFESSIONAL ENGINEER — 12-03-05

SURVEY INFORMATION

FIELD NOTES

NO.	BY	DATE

BENCH MARKS

STATION "TRANS" IS LOCATED 6 MI. SOUTHWEST OF DOWNTOWN ALBUQUERQUE, IN THE R.O.W. OF A PLAINS ELECTRIC CO-OP TRANSMISSION LINE. TO REACH STATION FROM INTERSECTION OF CENTRAL AVE. & 98TH ST. SW, GO SOUTH ON 98TH ST. 1.2 MI. TO JUNCTION WITH GIBSON BLVD. & SNOW VISTA BLVD., THEN SOUTHEAST ALONG SNOW VISTA AND CO-OP ELECTRIC TRANSMISSION LINE 0.85 MI. TO PYLON NUMBERED "52". STATION IS JUST EAST OF THIS POINT.
X = 354,899.45, Y = 1,471,822.67, ELEV. = 5118.37 (NAVD29)

AS BUILT INFORMATION

CONTRACTOR	
WORK STAKED BY Cartesian Surveys Inc.	DATE 2006
INSPECTOR'S ACCEPTANCE BY	DATE
FIELD VERIFICATION BY Cartesian Surveys Inc.	DATE 2008
DRAWINGS CORRECTED BY	DATE

MICRO-FILM INFORMATION

RECORDED BY	DATE
NO.	

A4009SNH/Amole Channel plans 2/98th Snow Vista Phase3/98X Cross-Sect-Base (Layout2) 11-16-05 NHE TAS RDQ