# CITY OF ALBUQUERQUE

Richard J. Berry, Mayor

January 10, 2017

Diane Hoelzer, P.E.
Mark Goodwin & Associates, P.A.
P.O. Box 90606
Albuquerque, NM, 87199

**RE: Los Diamantes**
**Revised Grading and Drainage Plan**
**Stamp Date 12-22-2016 (File: N09D013)**

Dear Ms. Hoelzer:

Based upon the information provided in your submittal received 12-23-2016, the above referenced Plan is approved for Grading Permit with the minor changes to the proposed pad elevations. We understand that the side yard slopes have been increased from 0.6% to 1%, and minor revisions to reflect final DRC plans are included.

Certification per the DPM will be required prior to Pad Cert/ROFG.

If you have any questions, you can contact me at 924-3986.

Sincerely,

Abiel Carrillo, P.E.
Principal Engineer, Planning Dept.
Development Review Services

Orig: Drainage file

PO Box 1293

Albuquerque

New Mexico 87103

www.cabq.gov

# City of Albuquerque

## Planning Department
## Development & Building Services Division
## DRAINAGE AND TRANSPORTATION INFORMATION SHEET
(REV 02/2013)

Project Title: Las Diamantes Subdivision Building Permit #: _____ City Drainage #: N09/D013
DRB#: 1010332 EPC#: _____ Work Order#: _____
Legal Description: Tract 34D-1-A, Lands of Salazar Family Trust, Salazar Quatro Trust, JSJ Investment Company, Falba Hannett and Lands of Curb Inc. ALBUQUERQUE,NM
City Address: _____

**Engineering Firm:** MARK GGODWIN & ASSOCIATES, PA Contact: DIANE HOELZER, PE
Address: 8916 ADAMS NE, ABQ, NM 87113
Phone#: 828-2200 Fax#: _____ E-mail: diane@goodwinengineers.com

**Owner:** 98th street LLC Contact: Rhett Waterman
Address: Box 27560, ABQ, NM 87125
Phone#: 248-1688 Fax#: _____ E-mail: _____

**Architect:** N/A Contact: _____
Address: _____
Phone#: _____ Fax#: _____ E-mail: kdegraauw@hotmail.com

**Surveyor:** N/A Contact: _____
Address: _____
Phone#: _____ Fax#: _____ E-mail: _____

**Contractor:** SUN VISTA ENTERPRISES, INC. Contact: Irwin Harms
Address: _____
Phone#: _____ Fax#: _____ E-mail: Irwin@sunvista.net

**TYPE OF SUBMITTAL:**

____ DRAINAGE REPORT
____ DRAINAGE PLAN 1st SUBMITTAL
____ DRAINAGE PLAN RESUBMITTAL
____ CONCEPTUAL G & D PLAN
x GRADING PLAN
____ EROSION & SEDIMENT CONTROL PLAN (ESC)
____ ENGINEER'S CERT (HYDROLOGY)
____ CLOMR/LOMR
____ TRAFFIC CIRCULATION LAYOUT (TCL)
____ ENGINEER'S CERT (TCL)
____ ENGINEER'S CERT (DRB SITE PLAN)
____ ENGINEER'S CERT (ESC)
____ SO-19
____ OTHER (SPECIFY)

**CHECK TYPE OF APPROVAL/ACCEPTANCE SOUGHT:**

____ SIA/FINANCIAL GUARANTEE RELEASE
____ PRELIMINARY PLAT APPROVAL
____ S. DEV. PLAN FOR SUB'D APPROVAL
____ S. DEV. FOR BLDG. PERMIT APPROVAL
____ SECTOR PLAN APPROVAL
____ FINAL PLAT APPROVAL
____ CERTIFICATE OF OCCUPANCY (PERM)
____ CERTIFICATE OF OCCUPANCY (TCL TEMP)
____ FOUNDATION PERMIT APPROVAL
____ BUILDING PERMIT APPROVAL
x GRADING PERMIT APPROVAL
____ PAVING PERMIT APPROVAL
____ WORK ORDER APPROVAL
____ GRADING CERTIFICATION

____ SO-19 APPROVAL
____ ESC PERMIT APPROVAL
____ ESC CERT. ACCEPTANCE
____ OTHER (SPECIFY)

RECEIVED DEC 23 2016 LAND DEVELOPMENT SECTION

WAS A PRE-DESIGN CONFERENCE ATTENDED: ____ Yes X No ____ Copy Provided
DATE SUBMITTED: December 22, 2016 By: DIANE HOELZER, PE

Requests for approvals of Site Development Plans and/or Subdivision Plats shall be accompanied by a drainage submittal. The particular nature, location, anc scope to the proposed development defines the degree of drainage detail. One or more of the following levels of submittal may be required based on the followin

1. **Conceptual Grading and Drainage Plan**: Required for approval of Site Development Plans greater than five (5) acres and Sector Plans
2. **Drainage Plans**: Required for building permits, grading permits, paving permits and site plans less than five (5) acres
3. **Drainage Report**: Required for subdivision containing more than ten (10) lots or constituting five (5) acres or more
4. **Erosion and Sediment Control Plan:** Required for any new development and redevelopment site with 1-acre or more of land disturbing area, including project less than 1-acre than are part of a larger common plan of development

## Kay Brashear

**From:** Kay Brashear
**Sent:** Friday, December 23, 2016 7:01 AM
**To:** 'plndrs@cabq.gov'
**Cc:** 'Vanessa Segura (VSegura@cabq.gov)'; 'Monica Ortiz (mortiz@cabq.gov)'; Diane Hoelzer
**Subject:** Los Diamantes #1010332
**Attachments:** Los Diamantes G&D Plan- revised 12-22-16.pdf; Drainage info Sheet.pdf; Cover Letter.pdf

Hard copies will be delivered today to the front desk.

Thank you,

*Kay Brashear*
Mark Goodwin & Associates, PA
Office Manager
PO BOX 90606
Albuquerque, NM 87119
(505) 828-2200

RECEIVED
DEC 2 3 2016
LAND DEVELOPMENT SECTION

D. Mark Goodwin & Associates, P.A.
Consulting Engineers
P.O. BOX 90606, ALBUQUERQUE,NM 87199
(505) 828-2200 FAX 797-9539

*~ 2012 ACEC/NM Award Winner for Engineering Excellence, Small Firm ~*
*~ 2008 ACEC/NM Award Winner for Engineering Excellence, Small Firm ~*

*December 22, 2016*

*Hydrology Dept.*
*City of Albuquerque*
*PO Box 1293*
*Albuquerque, NM 87103*

***Re: REVISED Los Diamantes Subdivision Grading and Drainage Plan***
***Revised Engineers stamp date 12-22-16 (N09/D013)***

*This grading and drainage plan was previously approved.*

*The only revision is the side yard swale slopes have been increased to 1.0% and the pads raised accordingly.*

*The storm drain was revised to reflect what was designed and approved at DRC.*

*Sincerely,*

*MARK GOODWIN & ASSOCIATES, P.A.*

*Diane Hoelzer, PE*
*Senior Engineer*

*DLH/dlh*
*f:\\14031 \Los Diamantes\ HYDRO_LTR_5_14031.docx*

RECEIVED
DEC 23 2016
LAND DEVELOPMENT SECTION

Current DRC Project Number: Hydrology Copy

ORIGINAL

FIGURE 12

INFRASTRUCTURE LIST

Date Submitted: 8/26/2015
Date Site Plan Approved:
Date Preliminary Plat Approved: 9-9-15
Date Preliminary Plat Expires: 9-9-16
DRB Project No.: 1010332
DRB Application No.: 15-70139

EXHIBIT "A"
TO SUBDIVISION IMPROVEMENTS AGREEMENT
DEVELOPMENT REVIEW BOARD (D.R.B.) REQUIRED INFRASTRUCTURE LIST

**Los Diamantes Subdivision & Site Plan for Building Permit**
PROPOSED NAME OF PLAT AND/OR SITE DEVELOPMENT PLAN

**Tract 34D-1-A, LANDS OF SALAZAR FAMILY TRUST,JSJ,INVESTMENT COMPANY AND FALBA HANNETT AND LANDS OF CURB INC.**
EXISTING LEGAL DESCRIPTION PRIOR TO PLATTING ACTION

Following is a summary of PUBLIC/PRIVATE Infrastructure required to be constructed or financially guaranteed for the above development. This Listing is not necessarily a complete listing. During the SIA process and/or in the review of the construction drawings, if the DRC Chair determines that appurtenant items and/or unforeseen items have not been included in the infrastructure listing, the DRC Chair may include those items in the listing and related financial guarantee. Likewise, if the DRC Chair determines that appurtenant or non-essential items can be deleted from the listing, those items may be deleted as well as the related portions of the financial guarantees. All such revisions require approval by the DRC Chair, the User Department and agent/owner. If such approvals are obtained, these revisions to the listing will be incorporated administratively. In addition, any unforeseen items which arise during construction which are necessary to complete the project and which normally are the Subdivider's responsibility will be required as a condition of project acceptance and close out by the City.

| SIA Sequence # | COA DRC Project # | Size | Type of Improvement | Location | From | To | Private Inspector | City Inspector | City Cnst Engineer |
|---|---|---|---|---|---|---|---|---|---|
| | | | **PAVING (All Streets - Private)** | | | | | | |
| | | 26' FF | Perm Pvmt | Del Timbre Lane SW | End stub Road | Saddlehorn Trail SW | / | / | / |
| | | | C&G (both sides) | | Lot 22, Block 1 | | | | |
| | | 4' | Sidewalk (west side only) | | | | / | / | / |
| | | 26' FF | Perm Pvmt | Del Timbre Lane SW | Saddlehorn Trail SW | Range Trail SW | / | / | / |
| | | | C&G (both sides) | | | | | | |
| | | 4' | Sidewalk (both sides) (1) | | | | / | / | / |
| | | 28' FF | Perm Pvmt | Del Timbre Lane SW | Range Trail SW | Gold Dust Way SW | / | / | / |
| | | | C&G (both sides) | | | | | | |
| | | 4' | Sidewalk (both sides) (1) | | | | / | / | / |
| | | 28' FF | Perm Pvmt | Gold Dust Way SW | Del Timbre Lane SW | Sorral Way SW | / | / | / |
| | | | C&G (both sides) | | | | | | |
| | | 4' | Sidewalk (both side) (1) | | | | / | / | / |
| | | 28' FF | Perm Pvmt | Sorral Way SW | Gold Dust Way SW | Range Trail SW | / | / | / |
| | | | C&G (both sides) | | | | | | |
| | | 4' | Sidewalk (both side) (1) | | | | / | / | / |
| | | 26' FF | Perm Pvmt | Sorral Way SW | Range Trail SW | Saddlehorn Trail SW | / | / | / |
| | | | C&G (both sides) | | | | | | |
| | | 4' | Sidewalk (both side) (1) | | | | / | / | / |

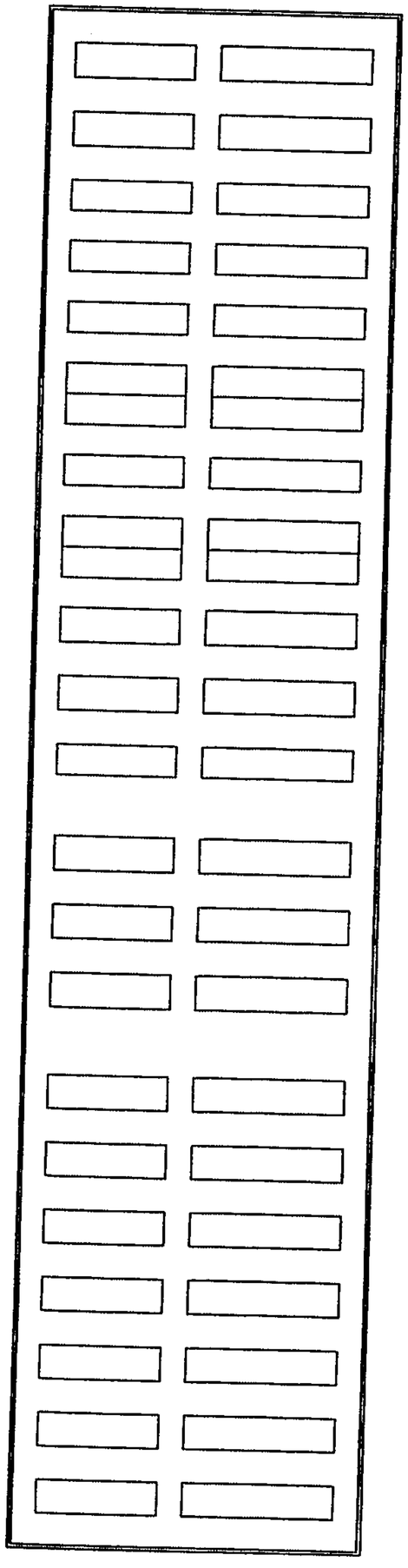

**PAVING (All Streets - Private)**

| | | | | |
|---|---|---|---|---|
| 26' FF | Perm Pvmt<br>C&G (both sides)<br>4' Sidewalk (both side) (1) | Saddlehorn Trail SW | Sorral Way SW | Del Timbre Lane SW |
| 28' FF | Perm Pvmt<br>C&G (both side)<br>4' Sidewalk (both side) (1) | Range Trail SW | Sorral Way SW | Del Timbre Lane SW |
| 50' FF | Perm Pvmt<br>C&G (both sides)<br>6' Median<br>6' Sidewalk (both side) (1) | Range Trail SW | Del Timbre Lane SW | Blake Road |
| 46' FF | Perm Pvmt<br>C&G (both sides)<br>6' Median<br>6' Sidewalk (both side) (1) | Cochise Lane SW | 98th Street SW | Gold Dust Way SW |
| 6' | Sidewalk Connection | Tract B | Gold Dust Way SW | Blake Road |
| 6' | Sidewalk Connection | Lot 22, Block 1 | Del Timbre Lane SW | Gibson Blvd. |
| 6' | Sidewalk Connection | Tract B Easement | Saddlehorn Trail SW | Tract A |

**SIDEWALKS (PUBLIC)**

| | | | | |
|---|---|---|---|---|
| 6' | Sidewalk | Blake Road | Gibson Blvd. | 98th street |
| 6' | Sidewalk | 98th Street | Blake Road | Gibson Blvd |
| 6' | Sidewalk | Gibson Blvd | Blake Road | 98th Street |

**WATER (2WR Zone)**

| | | | | |
|---|---|---|---|---|
| 8" | Waterline (2WR) | Blake Road | Range Trail SW | Exist 12" WL (140 ft SE) |
| 8" | Waterline (2WR) | Range Trail SW | Blake Road | Sorral Way |
| 8" | Waterline (2WR) | Del Timbre Lane SW | Range Trail SW | Gold Dust Way SW |
| 4" | Waterline (2WR) | Del Timbre Lane SW | Range Trail SW | Lot 31 & 32 |
| 8" | Waterline (2WR) | Gold Dust Way SW | Del Timebre | Sorral Way SW |
| 8" | Waterline (2WR) | Cochise Lane SW | Gold Dust Way SW | Existing 12" WL in 98th Street |
| 8" | Waterline (2WR) | Sorral Way SW | Gold Dust Way SW | Tract B Easement |

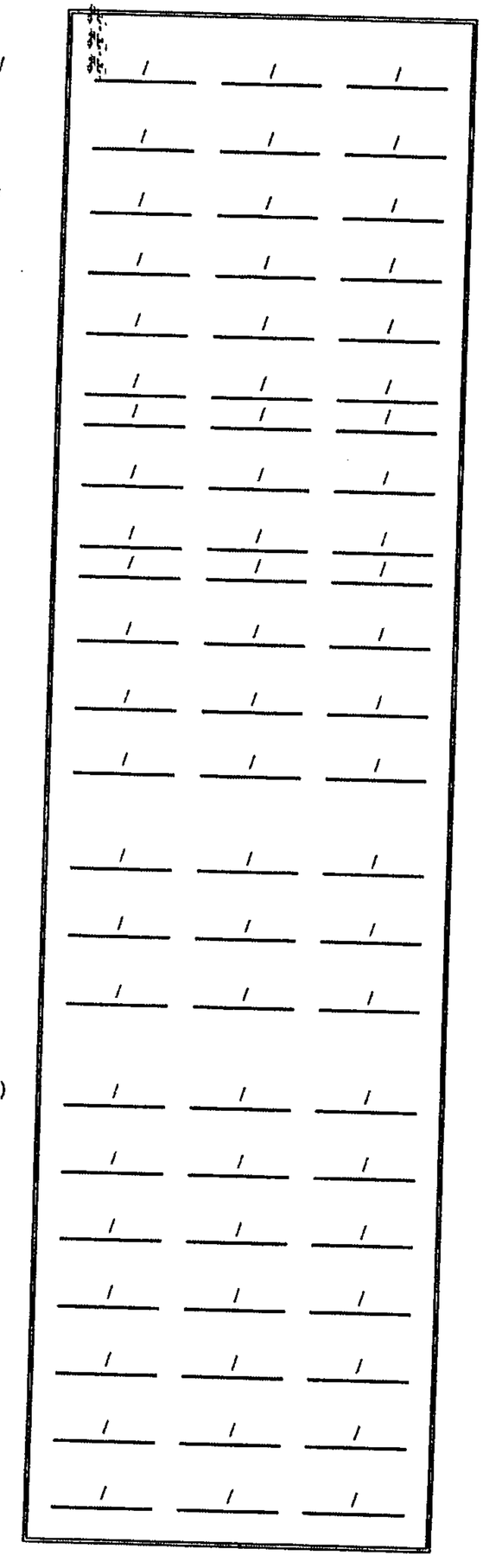

| | | | | |
|---|---|---|---|---|
| 8" | Waterline (2WR) | Tract B Easement | Sorral Way SW | Tract A Easement |
| 8" | Waterline (2WR) | Tract A Easement | Tract B Easement | Gibson Blvd. |
| 12" | Waterline (2WR) | Gibson Blvd. | Tract A Easement | Existing 12" WL |
| | **WATER (2W Zone)** | | | |
| 8" | Waterline (2W) | Range Trail SW | Existing 12" WL at Blake Road | Del Timbre Lane SW |
| 8" | Waterline (2W) | Del Timbre Lane SW | Range Trail SW | Saddlehorn |
| 4" | Waterline (2W) | Del Timbre Lane SW | Saddlehorn Trail SW | End Stub Lot 22, Block 1 |
| 8" | Waterline (2W) | Saddlehorn Trail SW | Del Timbre Lane SW | Tract B Easement |
| 8" | Waterline (2W) | Tract B Easement | Saddlehorn | Tract A Easement |
| 8" | Waterline (2W) | Tract A Easement | Tract B Easement | Gibson Blvd |
| 12" | Waterline (2W) | Gibson Blvd. | Tract A Easement | Existing 20" WL Blake Road |
| | **SANITARY SEWER** | | | |
| 8" | Sanitary Sewer | Cochise Lane SW | Gold Dust Way SW | Existing 8" SAS at 98th Street |
| 8" | Sanitary Sewer | Gold Dust Way SW | Del Timbre Lane SW | Sorral Way SW |
| 8" | Sanitary Sewer | Sorral Way SW | Gold Dust Way SW | Saddlehorn Trail SW |
| 8" | Sanitary Sewer | Saddlehorn Trail SW | Sorral Way SW | Del Timbre Lane SW |
| 8" | Sanitary Sewer | Del Timbre Lane SW | Gold Dust Way SW | Lot 22 Block 1, End Del Timbre Lane SW |

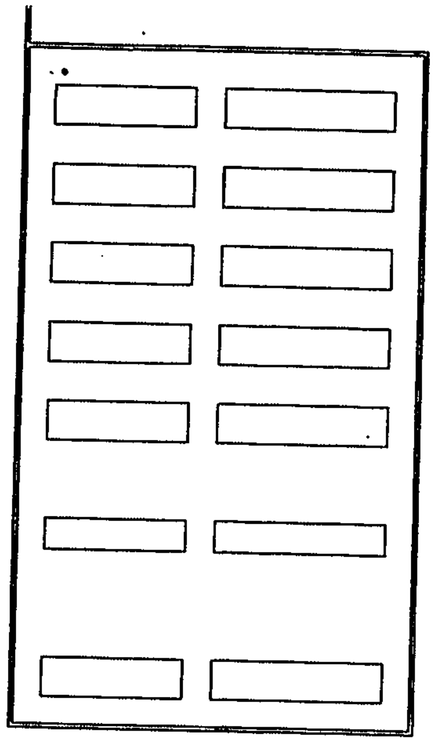

Los Diamantes DRB 1010332 (8-26-15)

**DRAINAGE**

| | | | | |
|---|---|---|---|---|
| Per design | Pond (0.81 ac-ft) | Tract B | | |
| Per design | Inlet | Gold Dust Way SW | | |
| 36" | Storm Drain | Tract B Easement | Gold Dust Way SW | Pond |
| Per design | Outfall Structure | Pond | | |
| 30" | Storm Drain | Tract B Easement | Pond | Exist 30" Storm Drain at Blake Road |
| Per design | Pond (0.35 ac-ft) | Tract A | | |
| 24" | Storm Drain (6) | 98th Street | Tract A | Exist Stub at Blake Road |

**WATER AUTHORITY**

Pro-Rata $58,408.10

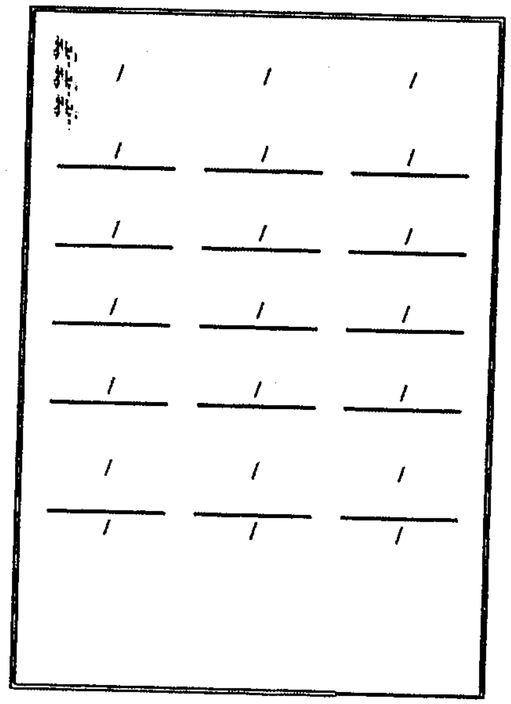

listing. The Items listed below are subject to the standard SIA requirements.

| Financially Guaranteed DRC # | Constructed Under DRC # | Size | Type of Improvement | Location | From | To | Construction Certification: Private Inspector P.E. | Construction Certification: City Cnst Engineer |
|---|---|---|---|---|---|---|---|---|
| | | | | | | | / / | / / |
| | | | | | | | / / | / / |

Approval of Creditable Items:
Impact Fee Admistrator Signature Date

Approval of Creditable Items:
City User Dept. Signature Date

1 Deferred sidewalk to comply with approved sidewalk exhibit
2 Waterline Infrastructure to include valves, fittings, service connections and fire hydrants
3 Storm Drain Infrastructure to include manholes and inlets
4 Grading & Drainage Certification required per DPM (Prior to release of Financial Guaranty) to include retaining walls as defined on the approved Grading Plan
5 SAS Infrastructure include manholes and service connections.
6 This item to be financially guaranteed separately

**AGENT / OWNER**

Diane Hoelzer, PE
NAME (print)

MARK GOODWIN & ASSOCIATES
FIRM

Diane Hoelzer 9-9-15
SIGNATURE - date

MAXIMUM TIME ALLOWED TO CONSTRUCT THE IMPROVEMENTS WITHOUT A DRB EXTENSION: N/A

**DEVELOPMENT REVIEW BOARD MEMBER APPROVALS**

9-9-15
DRB CHAIR - date

9/9/15
TRANSPORTATION DEVELOPMENT - date

9/09/15
UTILITY DEVELOPMENT - date

9-9-15
CITY ENGINEER - date

Carol S. Dumont 9-9-15
PARKS & ~~GENERAL SERVICES~~ Recreation - date

AMAFCA - date

_____ - date

_____ - date

**DESIGN REVIEW COMMITTEE REVISIONS**

# CITY OF ALBUQUERQUE

PLANNING DEPARTMENT – Development Review Services

Richard J. Berry, Mayor

September 9, 2015

Diane Hoelzer, P.E.
**Mark Goodwin & Associates, P.A.**
P.O. Box 90606
Albuquerque, NM 87199

RE: **Los Diamantes Subdivision**
**Drainage Report, and Grading and Drainage Plan**
**Engineer's Stamp Date 8-26-2015 (File: N09D013)**

Dear Ms. Hoelzer:

Based upon the information provided in your submittal received 8-27-15, the above referenced submittals are approved for Grading Permit with the following condition.

1. Temporary Pond on Tract A: Side slopes (2:1) must be stabilized with a more stable material. Per your email on 9/8/15 you will be changing it to a 3:1 slope with gravel mulch. This change must be reflected on the Engineer's Certified Plan.

Prior to Building Permit approval, Engineer Certification per the DPM checklist will be required.

Since the disturbed area on this site exceeds 1.0 acre, an Erosion and Sediment Control (ESC) Plan, prepared by a NM PE and approved by the City's Stormwater Engineer, will be required for this site.

This project requires a National Pollutant Discharge Elimination System (NPDES) permit for storm water discharge for disturbing one acre or more and a Topsoil Disturbance Permit for disturbing ¾ of an acre or more.

If you have any questions, you can contact me at 924-3695.

Sincerely,

Rita Harmon, P.E.
Senior Engineer, Hydrology
Planning Department

Orig: Drainage filec.pdf
c.pdf Addressee via Email

PO Box 1293
Albuquerque
New Mexico 87103
www.cabq.gov

# CITY OF ALBUQUERQUE

PLANNING DEPARTMENT – Development Review Services

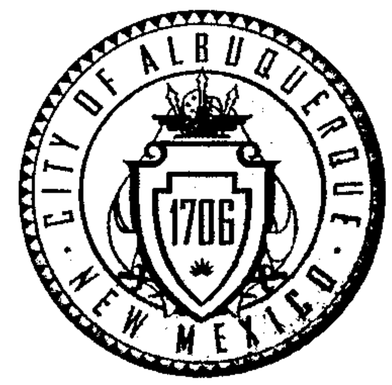


Richard J. Berry, Mayor

September 4, 2015

Diane Hoelzer, P.E.
**Mark Goodwin & Associates, P.A.**
P.O. Box 90606
Albuquerque, NM 87199

RE: **Los Diamantes Subdivision**
**Drainage Report, and Grading and Drainage Plan**
**Engineer's Stamp Date 8-26-2015 (File: N09D013)**

Dear Ms. Hoelzer:

Based upon the information provided in your submittal received 8-27-15, the above referenced submittals are approved for Preliminary Plat and Site Plan for Subdivision action by the DRB.

Prior to Grading Permit approval the following comments must be addressed:

1. Temporary Pond on Tract A: Side slopes (2:1) must be stabilized with a more stable material. Gravel mulch is not stable enough.

PO Box 1293

Albuquerque

New Mexico 87103

www.cabq.gov

The following summary is included in order to maintain a record of how the allowable discharge was determined:

The Conclusions from the meeting 3-11-15, and noted in the 6-1-15 comment letter are maintained. Curtis Cherne concurs with those comments and they are reiterated below.

- Per the meeting notes dated 3-11-15, the allowable discharge into the 30" stub at SDMH 16 (CPN 736782) is the difference between the upstream and downstream Q, or 505cfs - 472cfs = 33 cfs. This value matches that shown on Exhibit 4, Master SD Basin Map, for basin DB16.
- Per the same meeting notes, the Q at 98th St. is noted as 569cfs. The difference between the upstream and downstream Q at MH 17 is 569cfs – 505cfs = 64cfs. Exhibit 4 shows that DB20 (the roadway) discharges 19cfs, so 45 cfs is the allowable from DB9 (Exhibit 4).
- Per meeting notes, a storm drain in 98th was required.
- During the meeting we agreed that the street flows in Blake could be ignored due to the timing of the hydrograph.

Based on the above notes, the drainage report, and response letter:

- The total allowable developed discharge from this site, including Tract A is 45cfs (MH17) + 33cfs (MH16) = **78 cfs**.
- If this subdivision discharges 48.7cfs, then Tract A is allowed to discharge 29.3cfs.
- 33cfs was intended to discharge to the existing stub at MH 16 and the remaining to MH17 in 98th St.

D. Mark Goodwin & Associates, P.A.
Consulting Engineers
P.O. BOX 90606, ALBUQUERQUE,NM 87199
(505) 828-2200 FAX 797-9539

*~ 2012 ACEC/NM Award Winner for Engineering Excellence, Small Firm ~*
*~ 2008 ACEC/NM Award Winner for Engineering Excellence, Small Firm ~*

*August 26, 2015*

*Mrs. Rita Harmon, P.E.*
*Senior Engineer, Hydrology*
*City of Albuquerque*
*PO Box 1293*
*Albuquerque, NM 87103*

***Re: Los Diamantes Subdivision***
***Revised Engineers stamp date 8-24-15 (N09/D013)***

*Dear Mrs. Harmon;*

*Attached, please find a revised Grading & Drainage Plan (dated 8-26-2015), Drainage Management Plan (dated 8/26/2015), and an updated plat as required by your letter dated 8/12/2015. Our response and/or changes are as follows:*

1. ***"On the Preliminary Plat...use cross hatching over the pond easement..."*** *Completed, please see attached Plat.*

ok 2. ***"Remove Keyed Note 5, existing blanket easement to be entirely vacated"*** on P *Per the email dated 8/25/2015 from Jack Cloud, the vacation request for the blanket drainage easement can be made a condition of approval with preliminary plat, required prior to final plat.*

3. ***"Revise Keyed Note D..."*** *Completed, please see attached grading plan. The word "free" was removed and Q100= 48.7 cfs was added.*

4. ***"Since a total of 78 cfs is allowed, Tract A can discharge 29.3 cfs. Change note on plan and ensure 24" SD still works."*** *The note has been changed. Yes, 24" SD still works. Please see calculations in Appendix D of the DMP.*

5. ***"The 24" storm pipe in 98th street did not show on the grading plan. This SD should be built with this development (not future) otherwise the infrastructure list cannot be closed out..."*** *The 24" storm pipe was added to the plan. Per your email dated 8/13/2015, the storm drain CAN remain a future item. This item will be financially guaranteed separately and is indicated as such in the infrastructure list.*

6. ***"Temporary Pond on Tract A: Per DPM 22-5.I, retention ponds must be designed for the 100yr 10 day storm. Side slopes greater than 2:1 must be***

need better stabilization

RECEIVED
AUG 27 2015
LAND DEVELOPMENT SECTION

***stabilized..."*** *The pond is designed for the 100yr-10day storm as required. Additional calculations have been added to Appendix D in the DMP to clarify the design. A note has been added to the grading plan stating "2:1 slopes to be stabilized with gravel mulch."*

7. ***"Informational comment: All ponds are to be designed, detailed and certified via the grading plan and not through Work Order..."*** *Your email dated 8/13/2015 clarifies this comment by stating that "the inlet/outlet structures need only be detailed sufficiently to show it works, along with calculations (already done in the report)." This has been accomplished on the grading plan and in the DMP. An additional detail was added to the plan that shows how the inlet structure on Del Timbre Lane will work. These calculations are included in Appendix C of the DMP.*

8. ***"Since the Pond will be constructed off the Grading Plan...."***

   a. ***"Detail the emergency overflow from Del Timbre Lane to the pond. Show that flows will not flow through the emergency overflow before being collected by the inlet..."*** *An additional detail was added to the plan that shows how the inlet structure on Del Timbre Lane will work. Additional calculations are included in Appendix C of the DMP that shows that the developed flows will be captured by the inlet and will not overtop the standard curb. In addition, directional flow arrows and spot elevations have been added to the drive pad to clarify the drainage path for the emergency overflows. The depth of these flows are lower than the adjacent house pads.*
   b. ***"No calculations were included showing that the WSEL of the cattle guard/grate with a 50% clogging factor would not encroach into the private lots."*** *The MWSEL with a 50% clogging factor is 109.82, and the lowest pad is 110.90. Therefore the runoff will not encroach onto the private lots. Please see calculations in Appendix C of the DMP.*
   c. ***"Provide construction details of the cattle guard grate inlet as this is not a WO item..."*** *Please see note 2 of your attached email dated 8/13/2015. The inlet/outlets structures are detailed on the grading plan sufficiently to show how they will work. All calculations are contained in the DMP.*
   d. ***"Show Detail for the manhole/weir cover..."*** *Please see note 2 of your attached email dated 8/13/2015. The inlet/outlet structures are detailed on the grading plan sufficiently to show how they will work. In addition, a "Standard Grate Detail for Inlet" exhibit was added to the DMP for additional explanation.*
   e. ***"The emergency spillway for the pond (El. 108) appears to be lower than the sidewalk"*** *The elevation of the emergency spillway had been raised to 108.40. In addition, the location emergency spillway had been slightly adjusted towards the eastern corner so that the emergency spillway elevation of 108.40 is above the sidewalk.*

9. ***"Slopes on lot layout plan should be 1%...I am in the process of determining exactly what those issues are, and will inform you of any forthcoming information."*** *Per our discussion on 8/21/15, the designed slopes of 0.6% MIN can remain and the adjustment to 1% is NOT required.*

10. ***"All retaining walls and slopes must be shown on the plan. Double retaining walls or a slope must be shown between lots 4-6 and 7-10. It should not be left up the developer to determine..."*** *Please see changes on the Grading Plan. A double retaining wall is not required and new spot elevations have been added between lots 4-6 and 7-10. Keyed Note 9 has been edited to remove the contractor's choice of using 3:1 slopes or double walls.*

*Sincerely,*

*MARK GOODWIN & ASSOCIATES, P.A.*

*Diane Hoelzer, PE*
*Senior Engineer*

*DLH/kmk*
*f:\\14031 \Los Diamantes\ HYDRO_LTR_4_14031.docx*

## Kelly Klein

**From:** Diane Hoelzer
**Sent:** Wednesday, August 26, 2015 2:09 PM
**To:** Kelly Klein
**Subject:** FW: Los Diamante

*Diane Hoelzer, PE*
MARK GOODWIN & ASSOCIATES, PA
*diane@goodwinengineers.com*
(505) 828-2200

---

**From:** Harmon Rita T. [mailto:rharmon@cabq.gov]
**Sent:** Thursday, August 13, 2015 3:07 PM
**To:** Diane Hoelzer
**Subject:** Los Diamante

Diane,
We discussed this project at today's staff meeting. With the coming and going of staff, it sometimes becomes confusing as how to interpret and establish policy and practices. Private vs. public can be a bit confusing. With that said, I would like to revise my comments given at DRB, and some comments on the G&D comment letter as follows.

1) The Infrastructure List does need to list all the private infrastructure as well as the public infrastructure. Include both the temporary and permanent ponds and indicate the size in Ac-ft. List the outlet structure as well.

2) Ponds are certified as part of the Engineer's Certified Grading Plan and not the Work Order, therefore the pond needs to be detailed on the grading plan. The inlet/outlet structures need only be detailed sufficiently to show it works, along with calculations (already done in the report)

3) Therefore, the modified cattle guard inlet, and pond outlet structure **can** be detailed on the Work order

4) The 24" Storm Drain can be built in the future, but you need to request a deferral (like a SW deferral) and it would be indicated as such o the Infrastructure list. A separate SIA for the 24" SD will be required in order to close out the Work Order for this project.

Sorry for changes,

*Rita Harmon, P.E.*

## Kelly Klein

**From:** Kay Brashear
**Sent:** Tuesday, August 25, 2015 2:16 PM
**To:** Cloud, Jack W.; Diane Hoelzer; Angela Gomez (agomez@cabq.gov)
**Cc:** Kelly Klein
**Subject:** RE: Las Diamantes at 98th Street (DRB 1010332)

Jack and Angela,

We would like to request a 2 week deferral of this DRB Hearing, rescheduling to be heard on September 9, 2015.

*Thanks,*

*Kay Brashear*
*Mark Goodwin & Associates, PA*

**From:** Cloud, Jack W. [mailto:jcloud@cabq.gov]
**Sent:** Tuesday, August 25, 2015 1:07 PM
**To:** Diane Hoelzer <Diane@goodwinengineers.com>
**Cc:** Kelly Klein <Kelly@goodwinengineers.com>; Kay Brashear <kbrashear@goodwinengineers.com>
**Subject:** RE: Las Diamantes at 98th Street (DRB 1010332)

Sorry – yes, the vacation request for the blanket drainage easement can be made a condition of approval with Preliminary Plat, required prior to Final Plat.

Since this is an advertised case, we need a deferral request to a specific date. If you are wanting a one week deferral you need to come down today ASAP and submit a Sidewalk Waiver application to be heard with the rest of the project.

---

Jack Cloud, Chair
Development Review Board
505.924.3880

---

**From:** Diane Hoelzer [mailto:Diane@goodwinengineers.com]
**Sent:** Tuesday, August 25, 2015 12:17 PM
**To:** Cloud, Jack W.
**Cc:** Kelly Klein; Kay Brashear
**Subject:** Las Diamantes at 98th Street (DRB 1010332)

Jack,

At the last DRB hearing for this project, the vacation of #5 blanket drainage easement came up for discussion.
I requested that we vacate this easement sometime after Prel.Plat approval and prior to final plat approval.
Since these vacations only last so long and require Council approval, I had requested we do this after PP.

You said you would get back with me on this the next day, but I have not heard back from you on this issue. We are getting ready to make a resubmittal of all other requested revisions, but this issue is still outstanding.

Thanks,

*Diane Hoelzer, PE*
MARK GOODWIN & ASSOCIATES, PA
diane@goodwinengineers.com
(505) 828-2200

# CITY OF ALBUQUERQUE

PLANNING DEPARTMENT – Development Review Services

Richard J. Berry, Mayor

August 12, 2015

Diane Hoelzer, P.E.
**Mark Goodwin & Associates, P.A.**
P.O. Box 90606
Albuquerque, NM 87199

RE: **Los Diamantes Subdivision**
**Drainage Report, and Grading and Drainage Plan**
**Engineer's Stamp Date 8-4-2015 (File: N09D013)**

Dear Ms. Hoelzer:

Based upon the information provided in your submittal received 8-4-15, the above referenced submittals cannot be approved for Preliminary Plat and Site Plan for Subdivision action by the DRB until the following comments are addressed:

1. On the Preliminary plat: After discussing it with Jack Cloud, it would be better to use cross-hatching over the pond easement (#9) rather than put on a separate tract.
2. See comment Remove keyed note 5, existing blanket easement to be entirely vacated. — concl
3. Revise Keyed Note D to state "Extend existing 30"SD…to allow a discharge of Q100 = 48.7 cfs" (take out *free*, and use analysis discharge amount)
4. Since a total of 78 cfs allowed, Tract A can discharge 29.3 cfs. Change note on plan and ensure 24" SD still works.
5. The 24" Storm pipe in 98th St. did not show on the Grading and Drainage plan. This SD should be built with this development (not future) otherwise the infrastructure list cannot be closed out. The City Engineer should be contacted if you are in disagreement. Revised comment per email
6. Temporary Pond on Tract A: Per DPM 22-5.I, retention ponds must be designed for the 100 yr-10 day storm. Side slopes greater than 2:1 must be stabilized somehow and shown on the plan.
7. Informational comment: All Ponds are to be designed, detailed, and certified via the grading plan and not thru Work Order as had previous been practiced.
8. Since the pond will be constructed off the grading plan provide an enlarged plan of the pond.
   a. Detail the emergency overflow from Del Timbre Lane to the pond. Show that flows will not flow thru emergency overflow before being collected by the inlet. Is it hardscaped? Is there a drive pad? Or standard Curb?
   b. No calculations were included showing that the WSEL of the cattle guard/grate with a 50% clogging factor would not encroach into private lots.
   c. Provide construction details of the cattle guard grate inlet as this is not a Work Order item. Revise keyed note A as such.
   d. Show details for the manhole/wier cover. This will be certified on the grading plan and not on the Work Order, since the pond is Private.
   e. The emergency spillway for the pond (El. 108.0) appears to be lower than the sidewalk.

PO Box 1293
Albuquerque
New Mexico 87103
www.cabq.gov

9. Slopes on lot layout plan should be 1%. Homebuilders have complained that unless there is a 1 % slope, they have to regrade due to administrative issues. I am in the process of determining exactly what those issues are, and will inform you of any forthcoming information.
10. All retaining walls and slopes must be shown on the plan. Double retaining walls or a slope must be shown between lots 4-6 and 7-10. It should not be left up to the developer to determine where to put retaining walls, and where to slope – that should always be on the grading plan.

The following summary is included in order to maintain a record of how the allowable discharge was determined:

The Conclusions from the meeting 3-11-15, and noted in the 6-1-15 comment letter are maintained. Curtis Cherne concurs with those comments and they are reiterated below.

- Per the meeting notes dated 3-11-15, the allowable discharge into the 30" stub at SDMH 16 (CPN 736782) is the difference between the upstream and downstream Q, or 505cfs - 472cfs = 33 cfs. This value matches that shown on Exhibit 4, Master SD Basin Map, for basin DB16.
- Per the same meeting notes, the Q at 98th St. is noted as 569cfs. The difference between the upstream and downstream Q at MH 17 is 569cfs – 505cfs = 64cfs. Exhibit 4 shows that DB20 (the roadway) discharges 19cfs, so 45 cfs is the allowable from DB9 (Exhibit 4).
- Per meeting notes, a storm drain in 98th was required.
- During the meeting we agreed that the street flows in Blake could be ignored due to the timing of the hydrograph.

Based on the above notes, the drainage report, and response letter:

- The total allowable developed discharge from this site, including Tract A is 45cfs (MH17) + 33cfs (MH16) = **78 cfs**.
- If this subdivision discharges 48.7cfs, then Tract A is allowed to discharge 29.3cfs.
- 33cfs was intended to discharge to the existing stub at MH 16 and the remaining to MH17 in 98th St.
- This plan proposes to discharge approximately 50 cfs at MH 16, more than the intended 33 cfs into the 30" stub. This is acceptable as noted in #2 of the response letter dated June 2, 2015 and accepted by Hydrology.

If you have any questions, you can contact me at 924-3695.

Sincerely,

Rita Harmon, P.E.
Senior Engineer, Hydrology
Planning Department

Orig: Drainage filec.pdf
Addressee via Email

**DRAINAGE AND TRANSPORTATION INFORMATION SHEET**
**(Rev. 12/05)**

PROJECT TITLE: Los Diamantes Subdivision ZONE MAP/DRG. FILE: **N09 / D013**
DRB#: 1010332
LEGAL DESCRIPTION: Tract 34D-1-A, Lands of Salazar Family Trust, Salazar Quatro Trust, JSJ Investment Company, Falba Hannett and Lands of Curb Inc
CITY ADDRESS: Gibson and 98 th Street

ENGINEERING FIRM: MARK GOODWIN & ASSOCIATES, PA
ADDRESS: PO Box 90606
CITY, STATE: Albuquerque, NM
CONTACT: Diane Hoelzer, PE
PHONE: 828-2200
ZIP CODE: 87199

OWNER: 98th Street LLC
ADDRESS: Box 27560
CITY, STATE: Albuquerque, NM
CONTACT: Rhett Waterman
PHONE: 248-1688
ZIP CODE: 87125

ARCHITECT: N/A
ADDRESS:
CITY, STATE:
CONTACT:
PHONE:
ZIP CODE:

SURVEYOR: Aldrich Land Surveying
ADDRESS:
CITY, STATE:
CONTACT: Tim Aldrich
PHONE: 328-3988
ZIP CODE:

CONTRACTOR: N/A
ADDRESS:
CITY, STATE:
CONTACT:
PHONE:
ZIP CODE:

TYPE OF SUBMITTAL:
X DRAINAGE REPORT
___ DRAINAGE PLAN 1st SUBMITTAL
___ DRAINAGE PLAN RESUBMITTAL
___ CONCEPTUAL G & D PLAN
X GRADING PLAN **(dated 8-26-15)**
___ EROSION CONTROL PLAN
___ ENGINEER'S CERT (HYDROLOGY)
___ CLOMR/LOMR
___ TRAFFIC CIRCULATION LAYOUT
___ ENGINEER/ARCHITECT CERT (TCL)
___ ENGINEER/ARCHITECT (DRB SITE PLAN)
___ OTHER

CHECK TYPE OF APPROVAL SOUGHT:
___ SIA/FINANCIAL GUARANTEE RELEASE
X PRELIMINARY PLAT APPROVAL
___ S. DEV. PLAN FOR SUB'D APPROVAL
___ S. DEV. FOR BLDG. PERMIT APPROVAL
___ SECTOR PLAN APPROVAL
___ FINAL PLAT APPROVAL
___ FOUNDATION PERMIT APPROVAL
___ BUILDING PERMIT APPROVAL
___ CERTIFICATE OF OCCUPANCY (PERM)
___ CERTIFICATE OF OCCUPANCY (TEMP)
X GRADING PERMIT APPROVAL
___ PAVING PERMIT APPROVAL
___ WORK ORDER APPROVAL
___ OTHER (SPECIFY)

WAS A PRE-DESIGN CONFERENCE ATTENDED:
___ YES
___ NO
___ COPY PROVIDED

RECEIVED
AUG 2 7 2015
LAND DEVELOPMENT SECTION

SUBMITTED BY: Diane Hoelzer, PE DATE: March 24, 2015

Requests for approvals of Site Development Plans and/or Subdivision Plats shall be accompanied by a drainage submittal. The particular nature, location and scope to the proposed development define the degree of drainage detail. One or more of the following levels of submittal may be required based on the following:

1. **Conceptual Grading and Drainage Plan**: Required for approval of Site Development Plans greater than five (5) acres and Sector Plans.

2. **Drainage Plans**: Required for building permits, grading permits, paving permits and site plans less than five (5) acres.

3. **Drainage Report**: Required for subdivision containing more than ten (10) lots or constituting five (5) acres or more.

[redacted]

RECEIVED
2 7 2015
LAND DEVELOPMENT SECTION

MARK GOODWIN & ASSOCIATES
CONSULTING ENGINEERS

## Harmon Rita T.

**From:** Diane Hoelzer <Diane@goodwinengineers.com>
**Sent:** Tuesday, September 08, 2015 8:38 AM
**To:** Harmon Rita T.
**Subject:** RE: Los Diamantes Subdivision

Rita,
This is a temporary pond.
Gravel mulch on a 2:1 slope is adequate.
But I will change to a 3:1 slope with gravel mulch.

*Diane Hoelzer, PE*
**MARK GOODWIN & ASSOCIATES, PA**
*diane@goodwinengineers.com*
**(505) 828-2200**

---

**From:** Harmon Rita T. [mailto:rharmon@cabq.gov]
**Sent:** Friday, September 04, 2015 5:32 PM
**To:** Diane Hoelzer
**Subject:** FW: Los Diamantes Subdivision

Diane,
As soon as you are thru DRB, I will send you the Grading Permit Approval letter with slope stabilization a condition.

Also, the I.L. needs a small change. Show a 36" pipe from Gold Dust Way to Pond. And then distribute to all members( along with Grading Plan)

Rita

---

**From:** Harmon Rita T.
**Sent:** Friday, September 04, 2015 5:07 PM
**To:** Diane Hoelzer (Diane@goodwinengineers.com)
**Subject:** Los Diamantes Subdivision

Diane,

Please find attached a copy of the Hydrology Letter for the above referenced project.

Sincerely,

***Rita Harmon, P.E.***
*Senior Engineer*
Planning Department
Development & Review Services Division

600 2nd St. NW, Suite 201
Albuquerque, NM 87102
t 505-924-3695
f 505-924-3864

# Los Diamantes Subdivision

# Drainage Management Plan

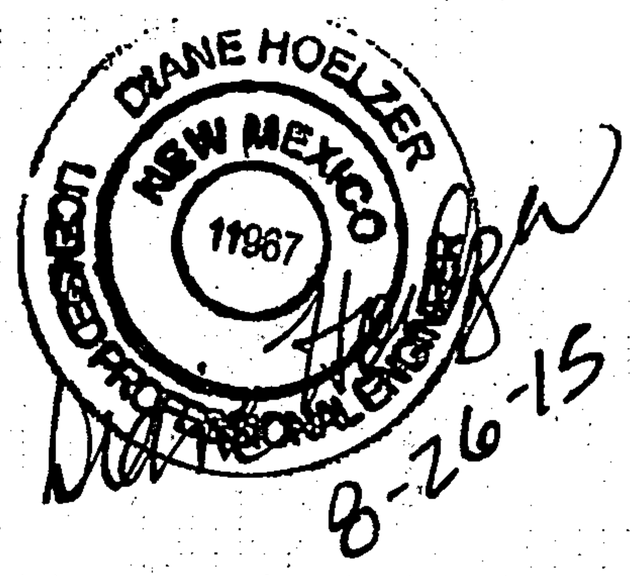


MARK GOODWIN & ASSOCIATES, PA

August 2015

# *Los Diamantes Subdivision*

Table of Contents


C.O.A. Comment Letter
Response Letter

I. Los Diamantes Drainage Management Plan

FIGURE 1 Vicinity Map
FIGURE 2 Preliminary Plat
FIGURE 3 Grading and Drainage Plan- (11"x17" copy)
FIGURE 4 Infrastructure List

APPENDIX A
Pond Design
First Flush Calculations
AHYMO printout

APPENDIX B
Summary of Street Capacity Calculations
Street Capacity Exhibit /Sub basin Boundaries
HEC-2 Printouts

APPENDIX C
Pond Outfall Design Details
Gold Dust Way Inlet Design Details
Standard Grate Detail for Inlet

APPENDIX D
Tract A Temporary Pond Calculations

APPENDIX E
Sun Gate Estates Basin Boundary Exhibit 4
Sun Gate Estates Phase I Utility P&P (sht 30-31)
Excerpts from Amole Hubbell 2013 Drainage Report for AMFCA

POCKET 1 GRADING AND DRAINAGE PLAN

# CITY OF ALBUQUERQUE

PLANNING DEPARTMENT – Development Review Services

Richard J. Berry, Mayor

August 12, 2015

Diane Hoelzer, P.E.
**Mark Goodwin & Associates, P.A.**
P.O. Box 90606
Albuquerque, NM 87199

RE: **Los Diamantes Subdivision**
**Drainage Report, and Grading and Drainage Plan**
**Engineer's Stamp Date 8-4-2015 (File: N09D013)**

Dear Ms. Hoelzer:

Based upon the information provided in your submittal received 8-4-15, the above referenced submittals cannot be approved for Preliminary Plat and Site Plan for Subdivision action by the DRB until the following comments are addressed:

1. On the Preliminary plat: After discussing it with Jack Cloud, it would be better to use cross-hatching over the pond easement (#9) rather than put on a separate tract.
2. Remove keyed note 5, existing blanket easement to be entirely vacated.
3. Revise Keyed Note D to state "Extend existing 30"SD…to allow a discharge of Q100 = 48.7 cfs" (take out *free*, and use analysis discharge amount)
4. Since a total of 78 cfs allowed, Tract A can discharge 29.3 cfs. Change note on plan and ensure 24" SD still works.
5. The 24" Storm pipe in 98th St. did not show on the Grading and Drainage plan. This SD should be built with this development (not future) otherwise the infrastructure list cannot be closed out. The City Engineer should be contacted if you are in disagreement.
6. Temporary Pond on Tract A: Per DPM 22-5.I, retention ponds must be designed for the 100 yr-10 day storm. Side slopes greater than 2:1 must be stabilized somehow and shown on the plan.
7. Informational comment: All Ponds are to be designed, detailed, and certified via the grading plan and not thru Work Order as had previous been practiced.
8. Since the pond will be constructed off the grading plan provide an enlarged plan of the pond.
   a. Detail the emergency overflow from Del Timbre Lane to the pond. Show that flows will not flow thru emergency overflow before being collected by the inlet. Is it hardscaped? Is there a drive pad? Or standard Curb?
   b. No calculations were included showing that the WSEL of the cattle guard/grate with a 50% clogging factor would not encroach into private lots.
   c. Provide construction details of the cattle guard grate inlet as this is not a Work Order item. Revise keyed note A as such.
   d. Show details for the manhole/wier cover. This will be certified on the grading plan and not on the Work Order, since the pond is Private.
   e. The emergency spillway for the pond (El. 108.0) appears to be lower than the sidewalk.

PO Box 1293
Albuquerque
New Mexico 87103
www.cabq.gov

9. Slopes on lot layout plan should be 1%. Homebuilders have complained that unless there is a 1 % slope, they have to regrade due to administrative issues. I am in the process of determining exactly what those issues are, and will inform you of any forthcoming information.
10. All retaining walls and slopes must be shown on the plan. Double retaining walls or a slope must be shown between lots 4-6 and 7-10. It should not be left up to the developer to determine where to put retaining walls, and where to slope – that should always be on the grading plan.

The following summary is included in order to maintain a record of how the allowable discharge was determined:

The Conclusions from the meeting 3-11-15, and noted in the 6-1-15 comment letter are maintained. Curtis Cherne concurs with those comments and they are reiterated below.

- Per the meeting notes dated 3-11-15, the allowable discharge into the 30" stub at SDMH 16 (CPN 736782) is the difference between the upstream and downstream Q, or 505cfs - 472cfs = 33 cfs. This value matches that shown on Exhibit 4, Master SD Basin Map, for basin DB16.
- Per the same meeting notes, the Q at 98th St. is noted as 569cfs. The difference between the upstream and downstream Q at MH 17 is 569cfs – 505cfs = 64cfs. Exhibit 4 shows that DB20 (the roadway) discharges 19cfs, so 45 cfs is the allowable from DB9 (Exhibit 4).
- Per meeting notes, a storm drain in 98th was required.
- During the meeting we agreed that the street flows in Blake could be ignored due to the timing of the hydrograph.

Based on the above notes, the drainage report, and response letter:

- The total allowable developed discharge from this site, including Tract A is 45cfs (MH17) + 33cfs (MH16) = **78 cfs.**
- If this subdivision discharges 48.7cfs, then Tract A is allowed to discharge 29.3cfs.
- 33cfs was intended to discharge to the existing stub at MH 16 and the remaining to MH17 in 98th St.
- This plan proposes to discharge approximately 50 cfs at MH 16, more than the intended 33 cfs into the 30" stub. This is acceptable as noted in #2 of the response letter dated June 2, 2015 and accepted by Hydrology.

If you have any questions, you can contact me at 924-3695.

Sincerely,

Rita Harmon, P.E.
Senior Engineer, Hydrology
Planning Department

Orig: Drainage file.pdf
Addressee via Email

dmg D. Mark Goodwin & Associates, P.A.
Consulting Engineers
P.O. BOX 90606, ALBUQUERQUE,NM 87199
(505) 828-2200 FAX 797-9539

*~ 2012 ACEC/NM Award Winner for Engineering Excellence, Small Firm ~*
*~ 2008 ACEC/NM Award Winner for Engineering Excellence, Small Firm ~*

*August 26, 2015*

*Mrs. Rita Harmon, P.E.*
*Senior Engineer, Hydrology*
*City of Albuquerque*
*PO Box 1293*
*Albuquerque, NM 87103*

***Re: Los Diamantes Subdivision***
***Revised Engineers stamp date 8-24-15 (N09/D013)***

*Dear Mrs. Harmon;*

*Attached, please find a revised Grading & Drainage Plan (dated 8-26-2015), Drainage Management Plan (dated 8/26/2015), and an updated plat as required by your letter dated 8/12/2015. Our response and/or changes are as follows:*

1. ***"On the Preliminary Plat...use cross hatching over the pond easement..."*** *Completed, please see attached Plat.*

2. ***"Remove Keyed Note 5, existing blanket easement to be entirely vacated"*** *Per the email dated 8/25/2015 from Jack Cloud, the vacation request for the blanket drainage easement can be made a condition of approval with preliminary plat, required prior to final plat.*

3. ***"Revise Keyed Note D..."*** *Completed, please see attached grading plan. The word "free" was removed and Q100= 48.7 cfs was added.*

4. ***"Since a total of 78 cfs is allowed, Tract A can discharge 29.3 cfs. Change note on plan and ensure 24" SD still works."*** *The note has been changed. Yes, 24" SD still works. Please see calculations in Appendix D of the DMP.*

5. ***"The 24" storm pipe in 98th street did not show on the grading plan. This SD should be built with this development (not future) otherwise the infrastructure list cannot be closed out..."*** *The 24" storm pipe was added to the plan. Per your email dated 8/13/2015, the storm drain CAN remain a future item. This item will be financially guaranteed separately and is indicated as such in the infrastructure list.*

6. ***"Temporary Pond on Tract A: Per DPM 22-5.I, retention ponds must be designed for the 100yr 10 day storm. Side slopes greater than 2:1 must be***

***stabilized..."*** *The pond is designed for the 100yr-10day storm as required. Additional calculations have been added to Appendix D in the DMP to clarify the design. A note has been added to the grading plan stating "2:1 slopes to be stabilized with gravel mulch."*

7. ***"Informational comment: All ponds are to be designed, detailed and certified via the grading plan and not through Work Order..."*** *Your email dated 8/13/2015 clarifies this comment by stating that "the inlet/outlet structures need only be detailed sufficiently to show it works, along with calculations (already done in the report)." This has been accomplished on the grading plan and in the DMP. An additional detail was added to the plan that shows how the inlet structure on Del Timbre Lane will work. These calculations are included in Appendix C of the DMP.*

8. ***"Since the Pond will be constructed off the Grading Plan...."***

   a. ***"Detail the emergency overflow from Del Timbre Lane to the pond. Show that flows will not flow through the emergency overflow before being collected by the inlet..."*** *An additional detail was added to the plan that shows how the inlet structure on Del Timbre Lane will work. Additional calculations are included in Appendix C of the DMP that shows that the developed flows will be captured by the inlet and will not overtop the standard curb. In addition, directional flow arrows and spot elevations have been added to the drive pad to clarify the drainage path for the emergency overflows. The depth of these flows are lower than the adjacent house pads.*
   b. ***"No calculations were included showing that the WSEL of the cattle guard/grate with a 50% clogging factor would not encroach into the private lots."*** *The MWSEL with a 50% clogging factor is 109.82, and the lowest pad is 110.90. Therefore the runoff will not encroach onto the private lots. Please see calculations in Appendix C of the DMP.*
   c. ***"Provide construction details of the cattle guard grate inlet as this is not a WO item..."*** *Please see note 2 of your attached email dated 8/13/2015. The inlet/outlets structures are detailed on the grading plan sufficiently to show how they will work. All calculations are contained in the DMP.*
   d. ***"Show Detail for the manhole/weir cover..."*** *Please see note 2 of your attached email dated 8/13/2015. The inlet/outlet structures are detailed on the grading plan sufficiently to show how they will work. In addition, a "Standard Grate Detail for Inlet" exhibit was added to the DMP for additional explanation.*
   e. ***"The emergency spillway for the pond (El. 108) appears to be lower than the sidewalk"*** *The elevation of the emergency spillway had been raised to 108.40. In addition, the location emergency spillway had been slightly adjusted towards the eastern corner so that the emergency spillway elevation of 108.40 is above the sidewalk.*

9. ***"Slopes on lot layout plan should be 1%...I am in the process of determining exactly what those issues are, and will inform you of any forthcoming information."*** *Per our discussion on 8/21/15, the designed slopes of 0.6% MIN can remain and the adjustment to 1% is NOT required.*

10. ***"All retaining walls and slopes must be shown on the plan. Double retaining walls or a slope must be shown between lots 4-6 and 7-10. It should not be left up the developer to determine..."*** *Please see changes on the Grading Plan. A double retaining wall is not required and new spot elevations have been added between lots 4-6 and 7-10. Keyed Note 9 has been edited to remove the contractor's choice of using 3:1 slopes or double walls.*

*Sincerely,*

*MARK GOODWIN & ASSOCIATES, P.A.*

*Diane Hoelzer, PE*
*Senior Engineer*

*DLH/kmk*
*f:\\14031 \Los Diamantes\ HYDRO_LTR_4_14031.docx*

## Los Diamantes Drainage Management Plan

The property is bounded by Blake Road to the south and west, by Gibson Blvd. to the north and by 98th Street to the east. The residential portion of the property encompasses 14.52 acres. The residential portion makes up 72% of the total area and will consist of an 80 lot subdivision for single family homes. Since the site is surrounded by developed streets, no offsite flows come onto the project site.

According to the Amole Hubbell Drainage Master Plan Update (excerpts from 2013 Report-Appendix D), this site is identified as sub basin A221 as shown on the Figure 3-7 Proposed Basin Map. The calculated 100 year peak discharge from this sub basin is 118.26 cfs. The report and construction plans indicate that the runoff is intercepted by a storm drain in Blake Road. This project site will discharge into an existing 30" storm pipe stub located at the southeast corner of the project site.

After meeting with City hydrology staff about the allowable discharge from this project site, it was decided that the design discharge from the project site would be based on the Sun Gate Phase I Utility Plan and Profile sheets 30-31 and the Sun Gate Estates Basin Boundary Map Exhibit 4. Both of these drawings can be found in Appendix D. It was further agreed that 50 cfs would be an acceptable allowable discharge value from this project site. When the adjacent commercial site develops, it is likely that an outfall located at the southeast corner of the commercial site will need to be constructed and a storm drain extended in the 98th street median and ultimately connected to the existing 72" storm drain in Blake Road.

Onsite runoff will be conveyed by surface street flow to the southeast corner of the property into a detention pond that will also serve to retain the "first flush" from stormwater. A 4' diameter manhole with a weir type outfall spillway with a 11 linear foot circumference will be designed to discharge developed flows into the 72" storm drain in Blake through the connecting 30" storm drain stub while retaining the first flush. The maximum water depth for the first flush will be 1.38 feet. The 100 years "allowable" discharge from the project site will be 50 cfs.

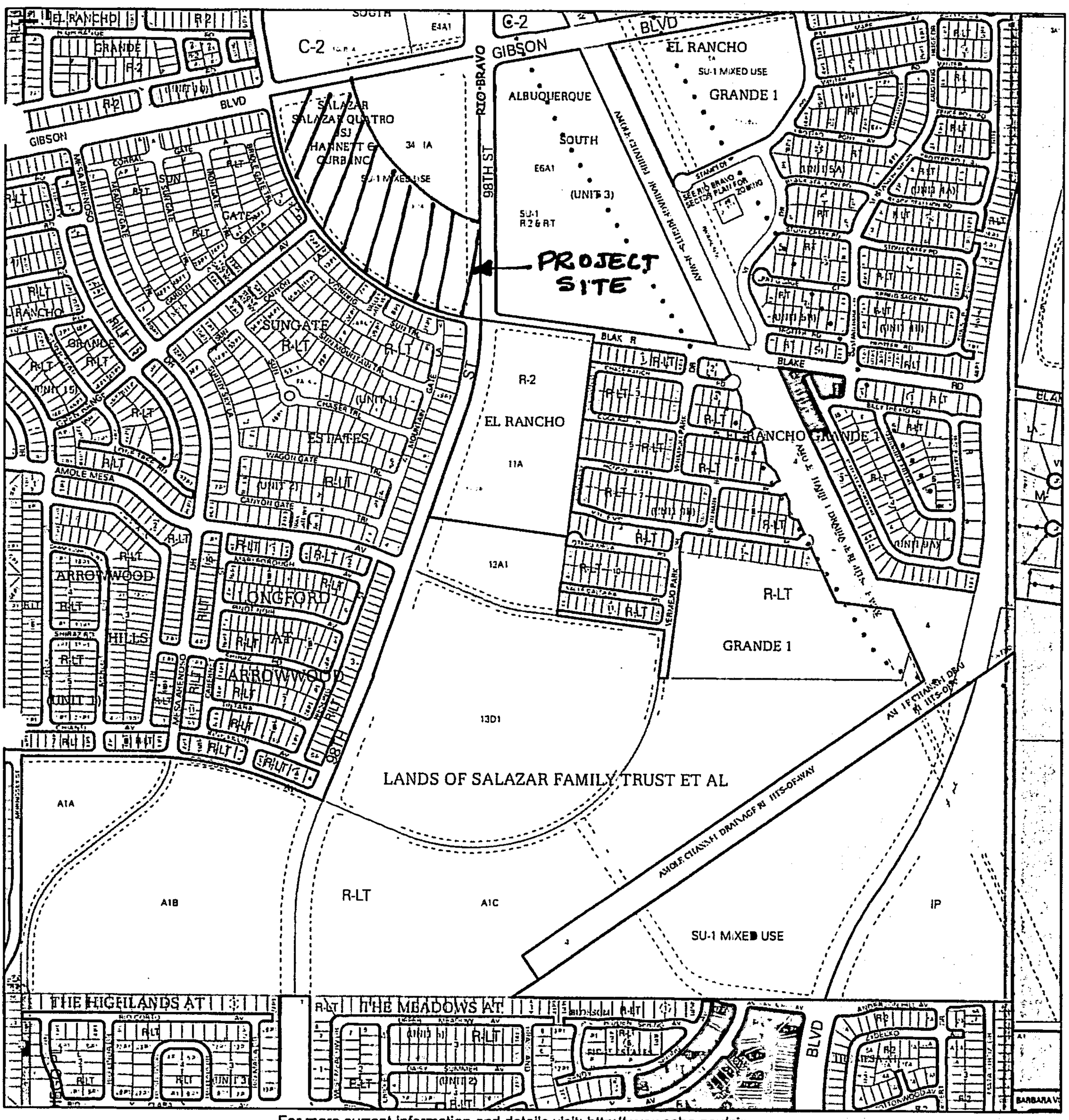


For more current information and details visit: http://www.cabq.gov/gis

Albuquerque Geographic Information System

Map amended through: 4/2/2012

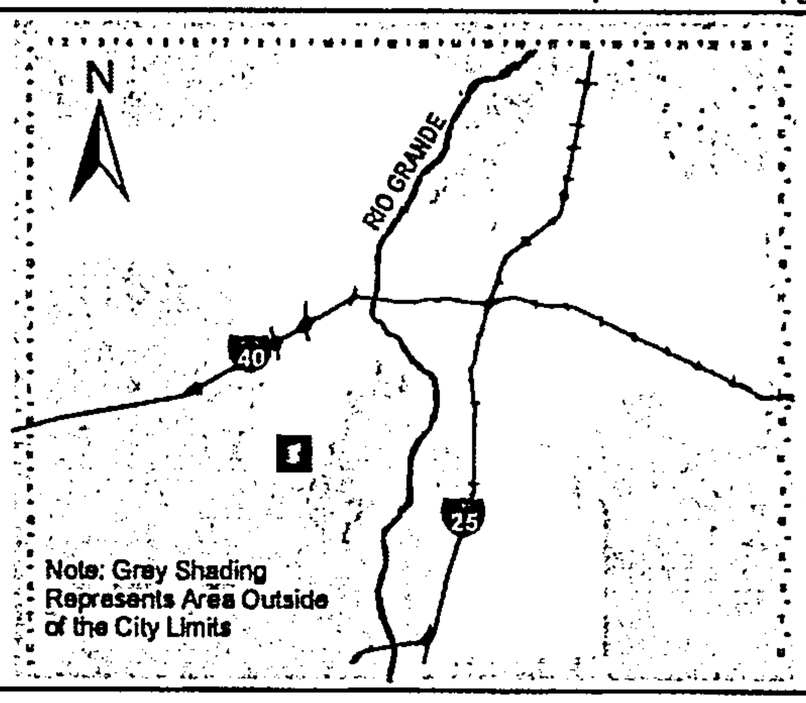


Zone Atlas Page:

**N-09-Z**

Selected Symbols

- SECTOR PLANS
- Design Overlay Zones
- City Historic Zones
- H-1 Buffer Zone
- Petroglyph Mon.
- Escarpment
- 2 Mile Airport Zone
- Airport Noise Contours
- Wall Overlay Zone

0 750 1 500 Feet

# PRELIMINARY PLAT FOR LOS DIAMANTES SUBDIVISION

WITHIN THE
TOWN OF ATRISCO GRANT
PROJECTED SECTION 4
TOWNSHIP 9 NORTH, RANGE 2 EAST, NMPM
CITY OF ALBUQUERQUE
BERNALILLO COUNTY, NEW MEXICO
JUNE, 2015

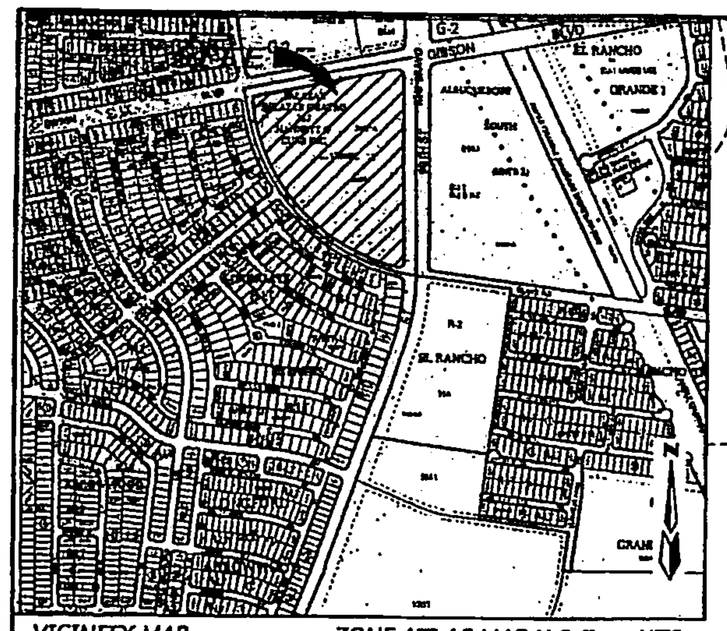

VICINITY MAP ZONE ATLAS MAP N-9-Z NTS

## LEGAL DESCRIPTION

A TRACT OF LAND SITUATE WITHIN THE TOWN OF ATRISCO GRANT, PROJECTED SECTION 4, TOWNSHIP 9 NORTH, RANGE 2 EAST, NEW MEXICO PRINCIPAL MERIDIAN, CITY OF ALBUQUERQUE, BERNALILLO COUNTY, NEW MEXICO, BEING ALL OF TRACT 34D-1-A, LANDS OF SALAZAR FAMILY TRUST, SALAZAR QUATRO TRUST, JSJ, INVESTMENT COMPANY AND FALBA HANNETT AND LANDS OF CURB INC. AS THE SAME IS SHOWN AND DESIGNATED ON SAID PLAT FILED FOR RECORD IN THE OFFICE OF THE COUNTY CLERK OF BERNALILLO COUNTY, NEW MEXICO ON NOVEMBER 25, 2003 IN BOOK 2003C, PAGE 357 AND CONTAINING (1,098,120 S.F.), 25.1635 ACRES MORE OR LESS.

## SUBDIVISION DATA

| | |
|---|---|
| GROSS ACREAGE | 25.1635 AC |
| AREA OF PUBLIC RIGHT-OF-WAY DEDICATED | 5.2999 AC |
| AREA OF TRACT A (COMMERCIAL) | 5.8729 AC |
| AREA OF COMMON AREAS (TRACT B) | 3.8472 AC |
| AREA OF RESIDENTIAL | 14.1907 AC |
| ZONE ATLAS NO. | N-9-Z |
| NO. OF LOTS CREATED | 80 LOTS |
| NO. OF TRACTS CREATED | 2 TRACTS |
| ZONING | SU-1 MIXED USE |
| DATE OF SURVEY | FEBRUARY, 2015 |

## PURPOSE OF PLAT

1. SUBDIVIDE LOT 34D-1-A, LANDS OF SALAZAR FAMILY TRUST, SALAZAR QUATRO TRUST, JSJ INVESTMENT COMPANY AND FALBA HANNETT AND LANDS OF CURB INC., INTO 80 RESIDENTIAL LOTS, 2 TRACTS (1 COMMERCIAL).
2. DEDICATE PRIVATE ROADWAY & PUBLIC RIGHT-OF-WAY AS SHOWN.
3. GRANT NEW EASEMENTS AS SHOWN.

## NOTES

1. UNLESS OTHERWISE NOTED, ALL BOUNDARY CORNERS SHOWN THUS ⊙ SHALL BE A SET #4 REBAR WITH YELLOW PLASTIC CAP "N.M.P.S. 11993"
2. ALL STREET CENTERLINE MONUMENTATION SHALL BE INSTALLED AT ALL CENTERLINE PC'S, PT'S, ANGLE POINTS, AND STREET INTERSECTIONS AND SHOWN THUS , ▲ WILL BE MARKED BY A FOUR INCH (4") ALUMINUM CAP STAMPED:
   "CITY OF ALBUQUERQUE CENTERLINE MONUMENTATION"
   "DO NOT DISTURB"
   N.M.P.S.#11993
3. FIELD SURVEY PERFORMED ON FEBRUARY, 2015.
4. ALL BEARINGS ARE GRID BEARINGS. NM STATE PLANE: CENTRAL ZONE-NAD 1983.
5. BOUNDARY SHALL BE TIED TO THE NEW MEXICO STATE PLANE COORDINATE SYSTEM AS SHOWN.
6. THIS PROPERTY LIES WITHIN THE SECTION 4, TOWNSHIP 9 NORTH, RANGE 2 EAST, NEW MEXICO PRINCIPAL MERIDIAN, CITY OF ALBUQUERQUE, BERNALILLO COUNTY, NEW MEXICO.
7. ALL DISTANCES ARE GROUND DISTANCES: U.S. SURVEY
8. MANHOLES WILL BE OFFSET AT ALL POINTS OF CURVATURE, POINTS OF TANGENCY, STREET INTERSECTIONS, AND ALL OTHER ANGLE POINTS TO ALLOW USE OF CENTERLINE MONUMENTATION.
9. PLAT SHOWS ALL EASEMENTS OF RECORD.
10. EASEMENT BEARINGS AND DISTANCES SHOWN HEREON ARE RECORD AND EASEMENTS HAVE BEEN ROTATED TO MATCH BASIS OF BEARINGS AND BOUNDARY UNLESS OTHERWISE INDICATED.
11. UPC #

| CURVE TABLE | | | | | |
|---|---|---|---|---|---|
| CURVE | LENGTH | RADIUS | DELTA | CHORD BEARING | CHORD LENGTH |
| C1 | 1578.54' | 1252.00' | 72°14'21" | S47°06'29"E | 1476.04' |
| | (1571.30') | | (72°14'13") | (N47°17'11"W) | (1470.09') |

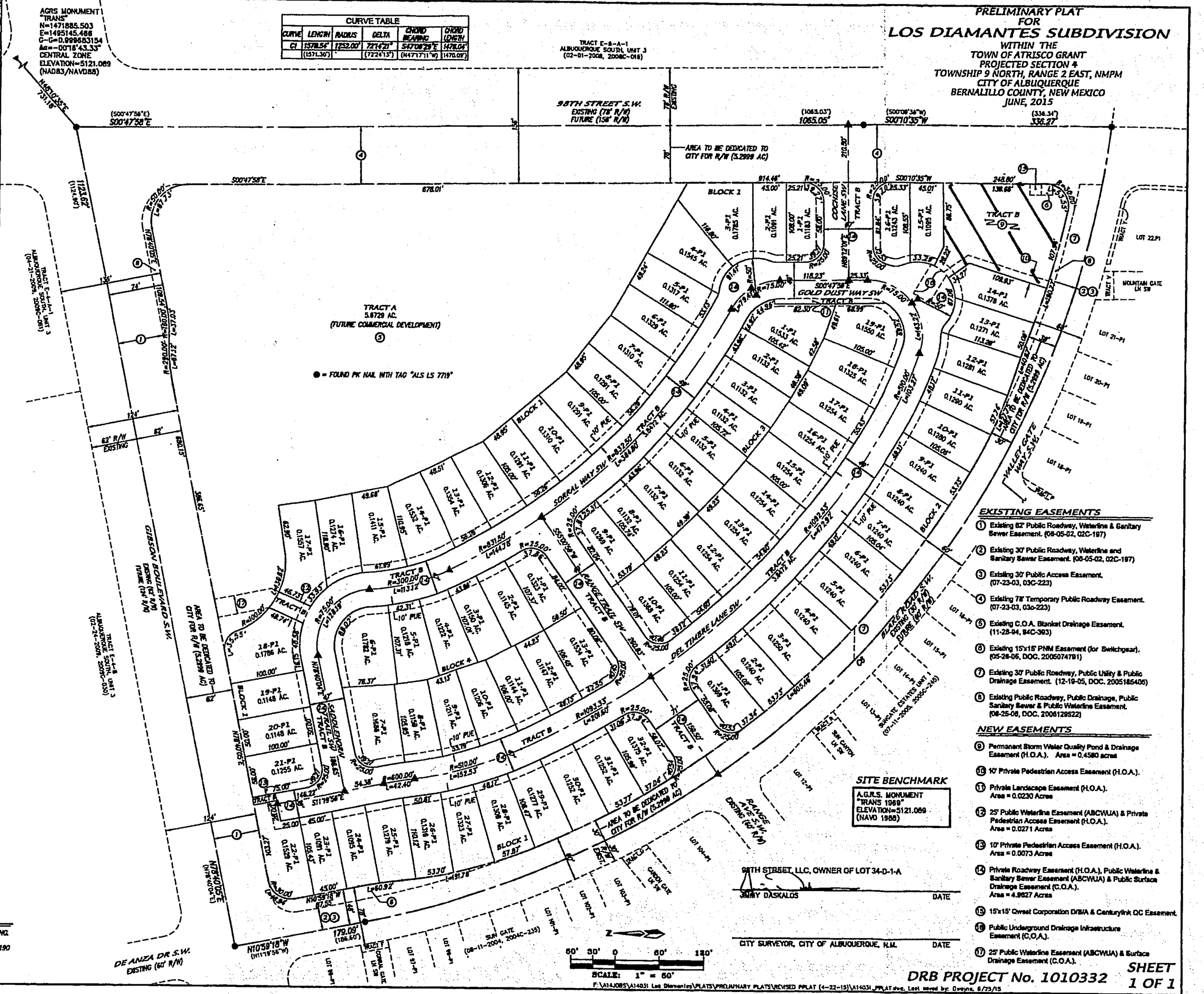


## EXISTING EASEMENTS

1. Existing 62' Public Roadway, Waterline & Sanitary Sewer Easement. (08-05-02, 02C-197)
2. Existing 30' Public Roadway, Waterline and Sanitary Sewer Easement. (08-05-02, 02C-197)
3. Existing 30' Public Access Easement. (07-23-03, 03C-223)
4. Existing 78' Temporary Public Roadway Easement. (07-23-03, 03c-223)
5. Existing C.O.A. Blanket Drainage Easement. (11-28-94, 94C-363)
6. Existing 15'x15' PNM Easement (for Switchgear). (05-26-05, DOC. 2005074791)
7. Existing 30' Public Roadway, Public Utility & Public Drainage Easement. (12-19-05, DOC. 2005185405)
8. Existing Public Roadway, Public Drainage, Public Sanitary Sewer & Public Waterline Easement. (08-25-06, DOC. 2006129522)

## NEW EASEMENTS

9. Permanent Storm Water Quality Pond & Drainage Easement (H.O.A.). Area = 0.4580 acres
10. 10' Private Pedestrian Access Easement (H.O.A.).
11. Private Landscape Easement (H.O.A.). Area = 0.0230 Acres
12. 25' Public Waterline Easement (ABCWUA) & Private Pedestrian Access Easement (H.O.A.). Area = 0.0271 Acres
13. 10' Private Pedestrian Access Easement (H.O.A.). Area = 0.0073 Acres
14. Private Roadway Easement (H.O.A.), Public Waterline & Sanitary Sewer Easement (ABCWUA) & Public Surface Drainage Easement (C.O.A.). Area = 4.9627 Acres
15. 15'x15' Qwest Corporation D/B/A & Centurylink QC Easement.
16. Public Underground Drainage Infrastructure Easement (C.O.A.).
17. 25' Public Waterline Easement (ABCWUA) & Surface Drainage Easement (C.O.A.).


**OWNERS**
98TH STREET, L.L.C.
6300 JEFFERSON NE
ALBUQUERQUE, N.M. 87109
(505) 975-0817

**ENGINEERS**
D. MARK GOODWIN & ASSOCIATES, P.A.
CONSULTING ENGINEERS
P.O. BOX 90806
ALBUQUERQUE, NEW MEXICO 87199
(505) 828-2200

**SURVEYOR**
ALDRICH LAND SURVEYING
P.O. BOX 30701
ALBUQUERQUE, N.M. 87190
(505) 884-1980


DRB PROJECT No. 1010332

SHEET 1 OF 1

F:\A14JOBS\A14031 Los Diamantes\PLATS\PRELIMINARY PLATS\REVISED PPLAT (4-22-15)\A14031_PPLAT.dwg, Last saved by: Dwayne, 6/25/15

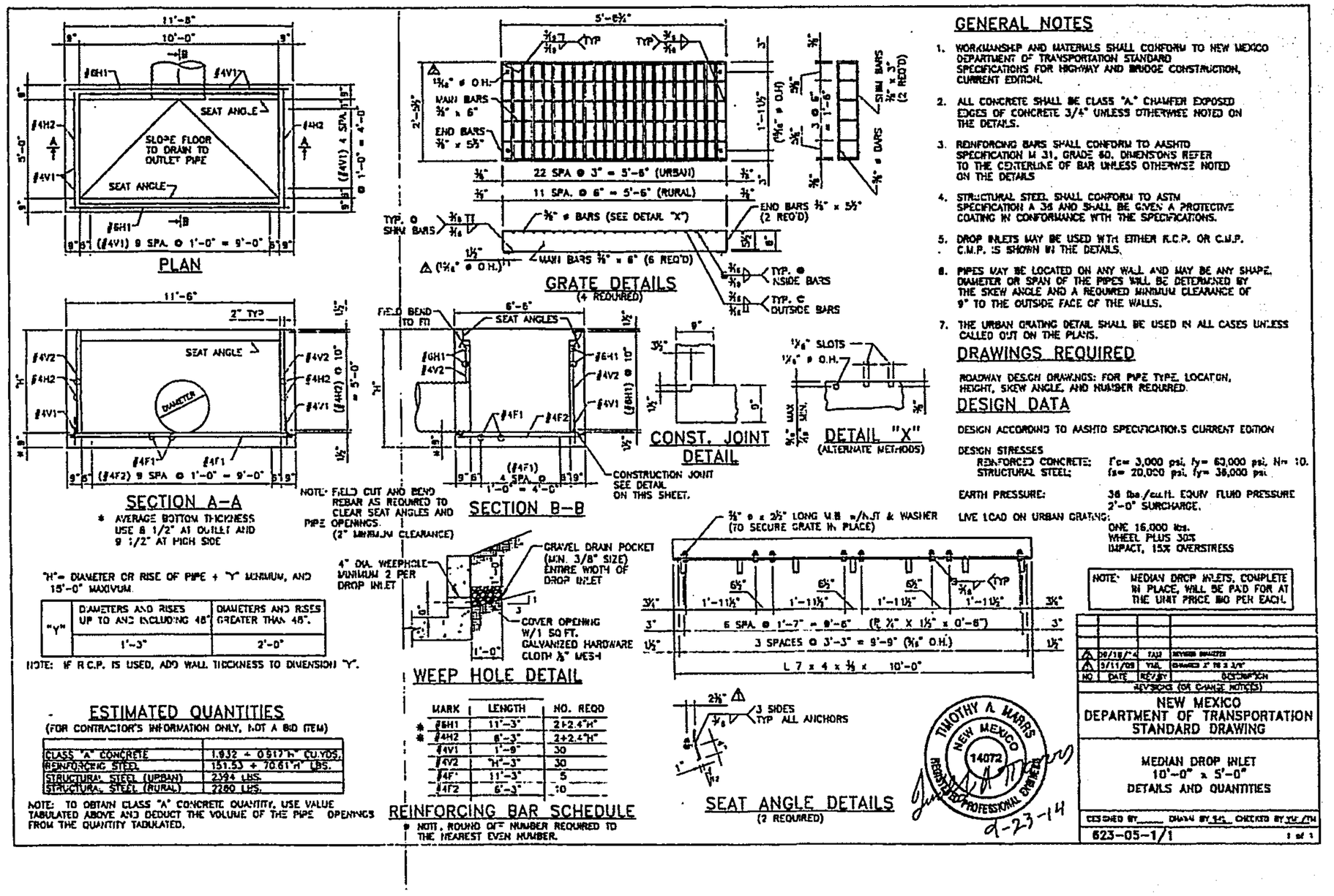


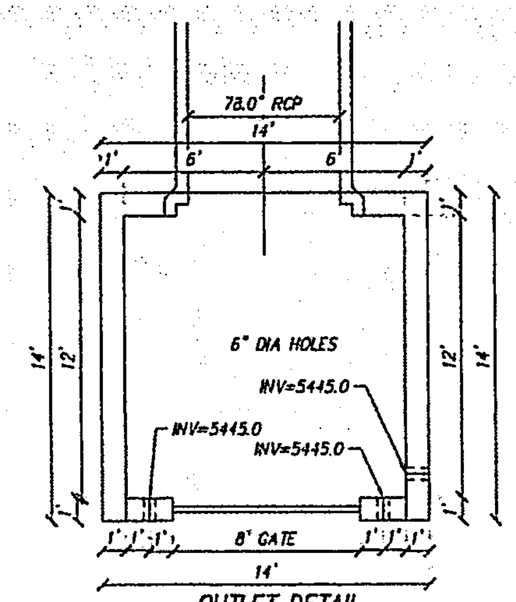


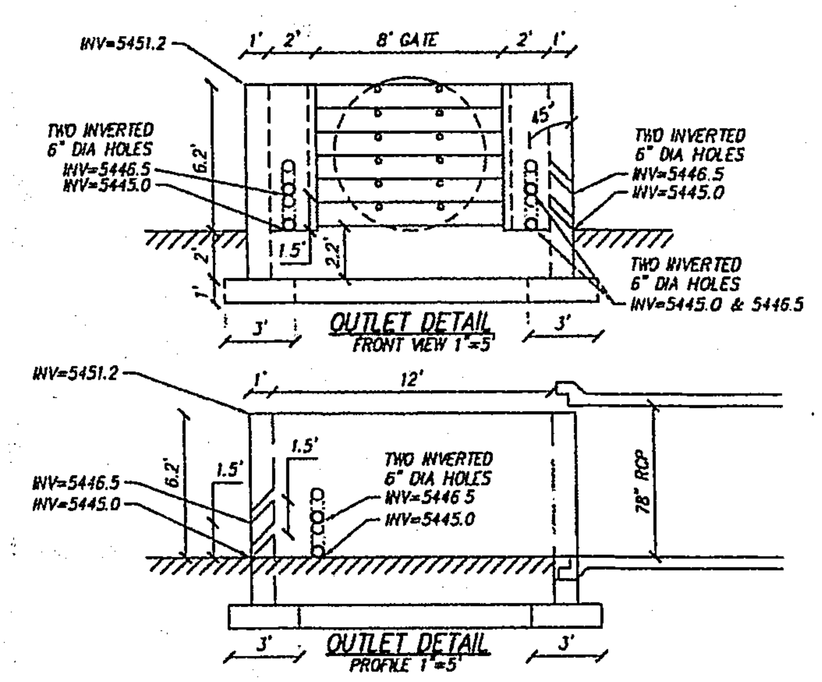


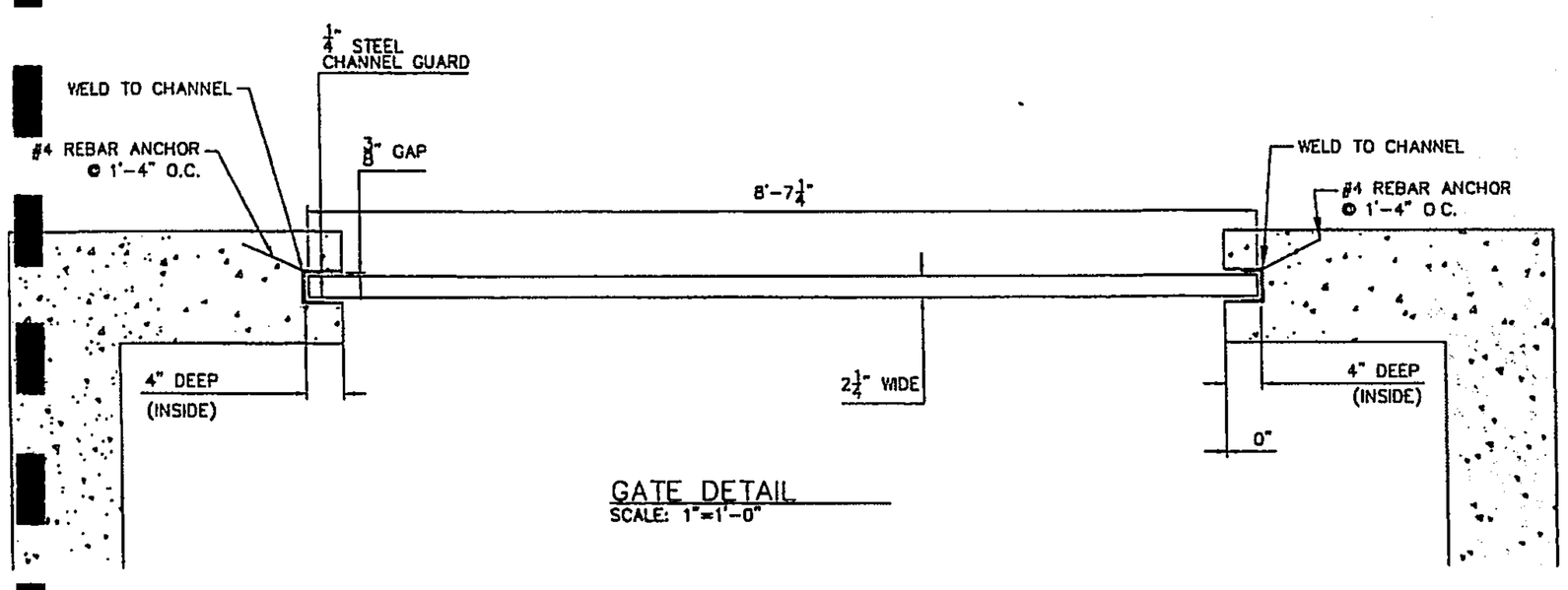


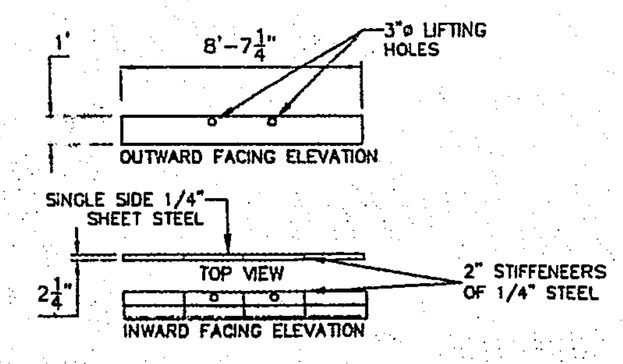


STANDARD GRATE DETAIL FOR INLET

| NO. | DESCRIPTION | DATE | BY |
|---|---|---|---|
| 1 | | | |
| 2 | | | |
| 3 | | | |
| 4 | | | |
| 5 | | | |
| 6 | | | |
| 7 | | | |

REVISIONS (OR CHANGE NOTICES)

City of Rio Rancho

OWNER/DEVELOPER
Coal Bank Holdings, Ltd.

MARK GOODWIN & ASSOCIATES, P.A.
CONSULTING ENGINEERS
P.O. BOX 90808 ALBUQUERQUE, NEW MEXICO 87199
(505)828-2200, FAX (505)797-8539

STONEGATE-PHASE I

STORM DRAINAGE DETAILS

ENGINEER'S SEAL
JAMES D. HUBBARD 11524 NEW MEXICO REGISTERED PROFESSIONAL ENGINEER
1-29-2015

| | |
|---|---|
| PROJECT NO. | A11013 |
| DESIGNED BY: | JDH |
| DRAWN BY: | SPS |
| CHECKED BY: | DMG |
| DATE: | 11/13/14 |
| OPW CHK: | |

SHEET:



Copyright © 2015 D. MARK GOODWIN & ASSOCIATES, P.A. All Rights Reserved.

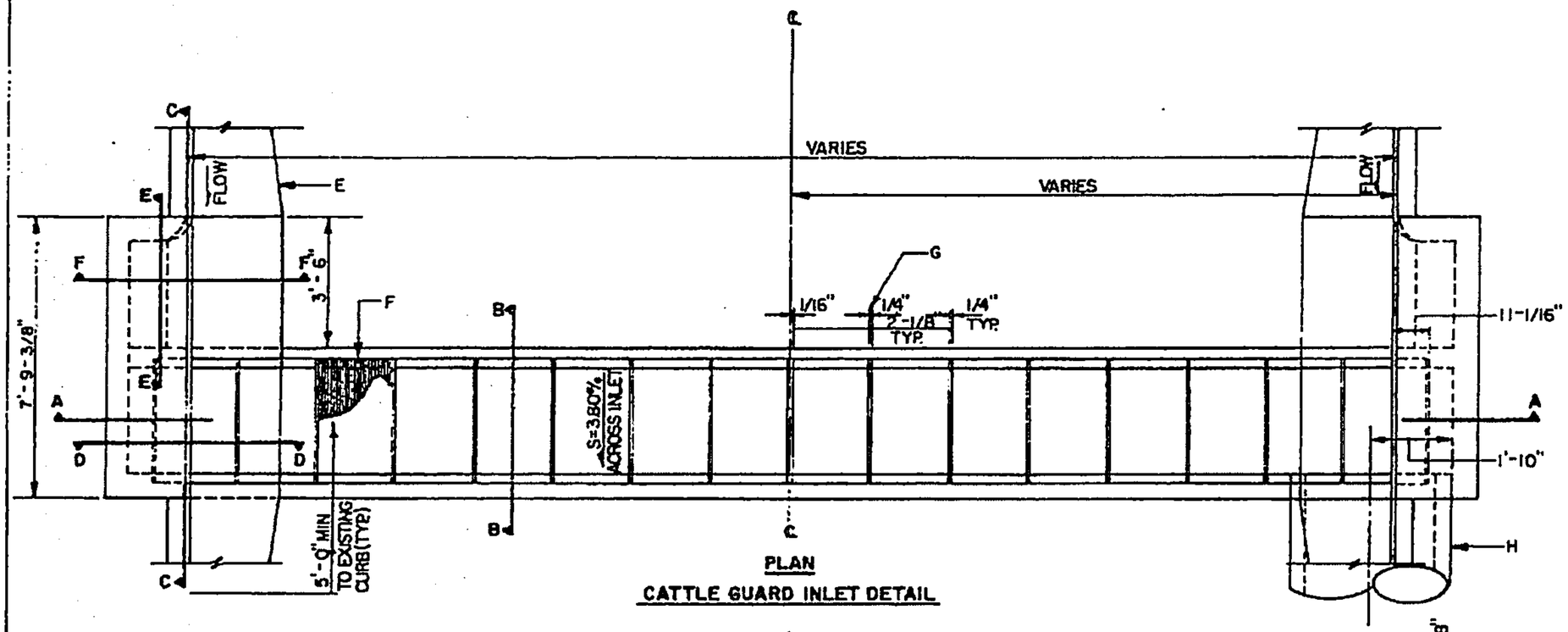


PLAN

CATTLE GUARD INLET DETAIL

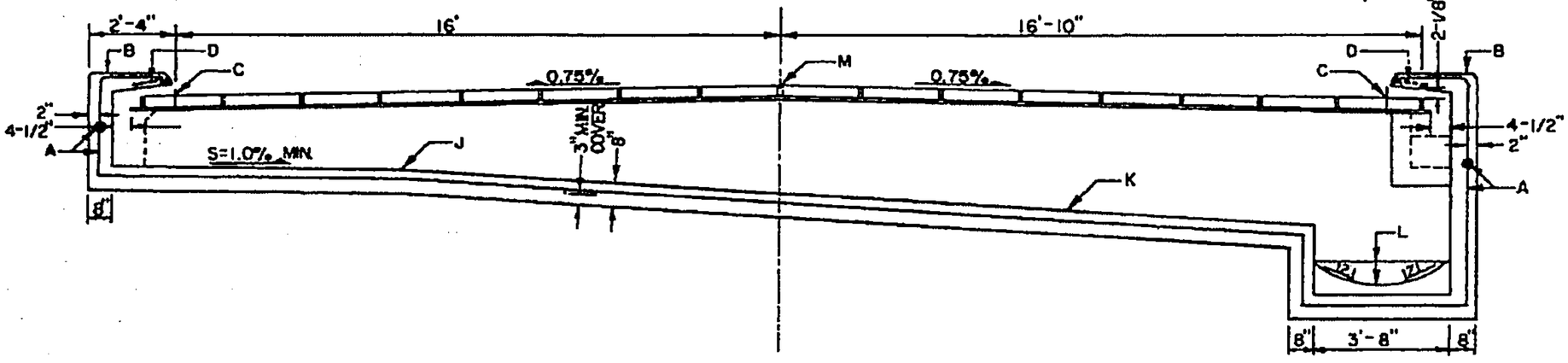


SECTION A-A

NOTE: SEE DWG. 2272 FOR SECTIONS B-B, C-C, D-D, E-E, AND F-F.

GENERAL NOTES

1. ALL EXPOSED METAL PARTS SHALL BE PAINTED PRIOR TO ASSEMBLY. WELDING, MACHINING AND DRILLING SHALL BE DONE PRIOR TO PAINTING. ALL DIMENSIONS ARE FINISH DIMENSIONS.
2. ALL PARTS SHALL BE OF STRUCTURE STEEL, GRADE 36.
3. FOR CLEANING AND PAINTING OF FRAME SEE DWG. 2215, GENERAL NOTE NO. 4.
4. FRAME MAY BE WELDED OR RIVETED.

CONSTRUCTION NOTES

A. NO. 4 BARS AT 6" O.C. EACH WAY.
B. TOP OF CURB.
C. CURB FLOWLINE.
D. ANGLE ANCHOR DETAIL, SEE DWG. 2205.
E. SEE CITY OF ALBUQUERQUE STD. DWG. 2207 FOR STORM INLET GUTTER TRANSITION.
F. GRATE PER CITY OF ALBUQUERQUE STD. DWG. 2220 (TYP.) 16 TOTAL MODIFIED WITH 1" GAP COVER PLATE PER DETAIL THIS SHEET.
G. 1/4" SPACE BETWEEN GRATES (TYP.).
H. OUTLET STORM DRAINAGE HORIZONTAL AND VERTICAL LOCATION MAY VARY PER SPECIFIC PROJECT.
J. GRADE BREAK.
K. GRADE BREAK LOCATIONS AND SLOPE MAY VARY DEPENDING ON LOCATION OF INLET.
L. CONCRETE FILL MINIMUM LONGITUDINAL SLOPE 4:1.
M. CROWN.

| | |
|---|---|
| REVISIONS | CITY OF ALBUQUERQUE |
| | DRAINAGE |
| | CATTLE GUARD INLET |
| | DWG. 2271 APRIL 1992 |

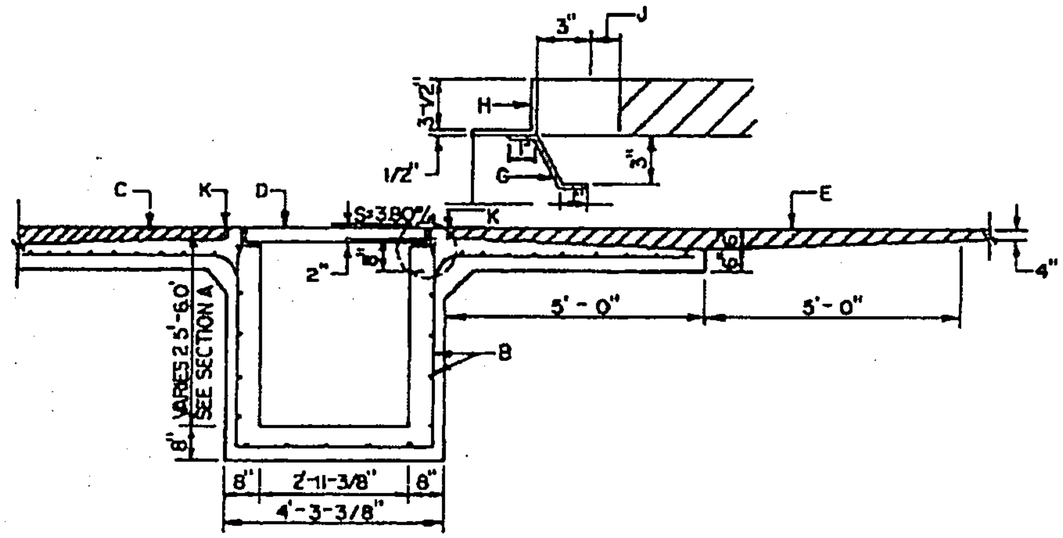


SECTION B-B

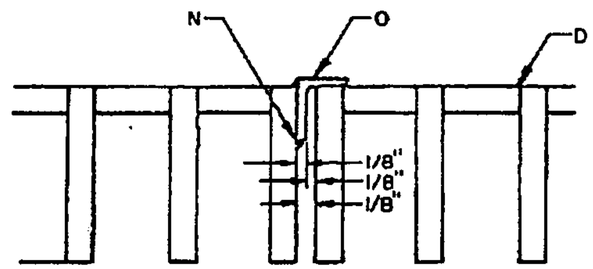


GRATE CAP COVER PLATE DETAIL

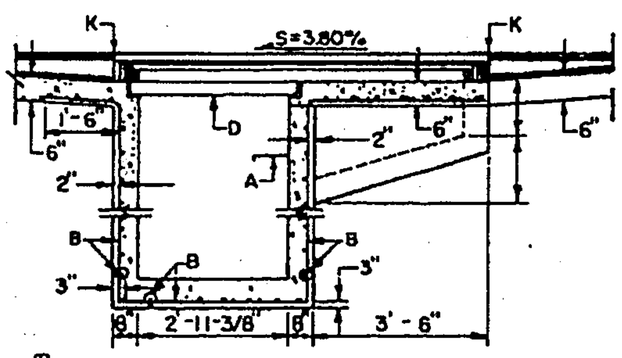


SECTION C-C

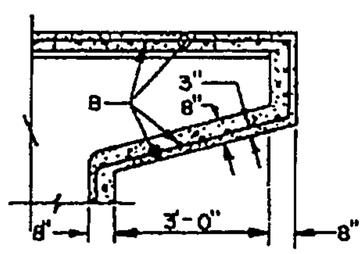


SECTION E-E

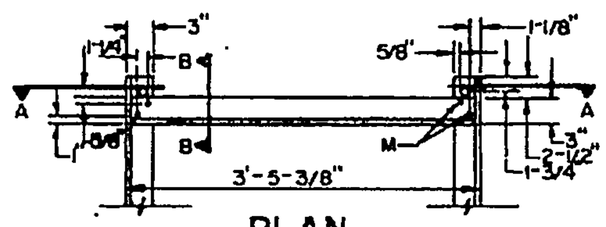


PLAN

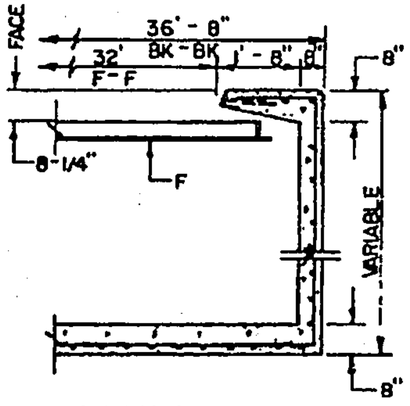


SECTION D-D

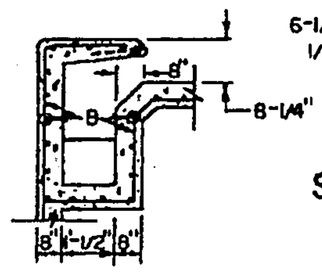


SECTION F-F

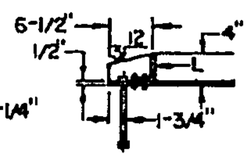


SECTION B-B

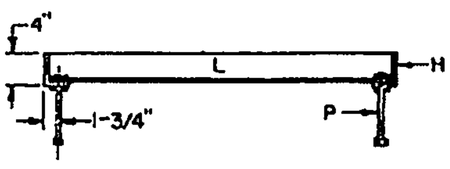


SECTION A-A

GRATE FRAME END DETAIL

NOTE:
SEE DWG. 2271 FOR ADDITIONAL CATTLE GUARD INLET DETAIL

## GENERAL NOTES

1. ALL EXPOSED METAL PARTS SHALL BE PAINTED PRIOR TO ASSEMBLY. WELDING, MACHINING AND DRILLING SHALL BE DONE PRIOR TO PAINTING. ALL DIMENSIONS ARE FINISH DIMENSIONS.
2. ALL PARTS SHALL BE OF STRUCTURE STEEL, GRADE 36.
3. FOR CLEANING AND PAINTING OF FRAME SEE DWG. 2215, GENERAL NOTE NO. 4.
4. FRAME MAY BE WELDED OR RIVETED.

## CONSTRUCTION NOTES

A. FOR STORM INLET DEPTHS GREATER THAN 4'. INSTALL STD. STEPS, SEE STD. DETAIL.
B. NO. 4 BARS AT 6" O.C. EACH WAY.
C. ROUGH TEXTURE CONCRETE SURFACE (TYP.)
D. GRATE.
E. THICKEN ASPHALT PAVEMENT TO 6" AT EDGE OF APRON BOTH SIDES OF INLET (TYP.)
F. GRATE FRAME.
G. 1" X 1/8" STEEL STRAP-WELD TO ANGLE 6" O.C.
H. 4" X 3" X 1/2".
J. 2" CLEARANCE.
K. SEE PLAN.
L. 3-1/2" X 3" X 3/8" X 3'-4"-3/8".
M. 2-3/8" RIVETS AT EACH CORNER, SEE GENERAL NOTE NO. 4.
N. 1/8" FILLET WELD 2" LONG AT 6" O.C. (TYP.)
O. 1/2" X 1" X 1/8" STEEL ANGLE FULL LENGTH OF GRATE ONE SIDE ONLY EACH GRATE.
P. FOUR (4) EACH 1/2" x 8" BOLTS WITH SQUARE HEADS AND NUTS. ONE BOLT AT EACH CORNER FOR ANCHORING THE FRAME INTO THE CONCRETE WALL.

REVISIONS

CITY OF ALBUQUERQUE

DRAINAGE

CATTLE GUARD INLET

DWG. 2272

APRIL 1992

# Appendix D

Tract A Temporary Pond

Preliminary Plan and Profile

Ahymo printout

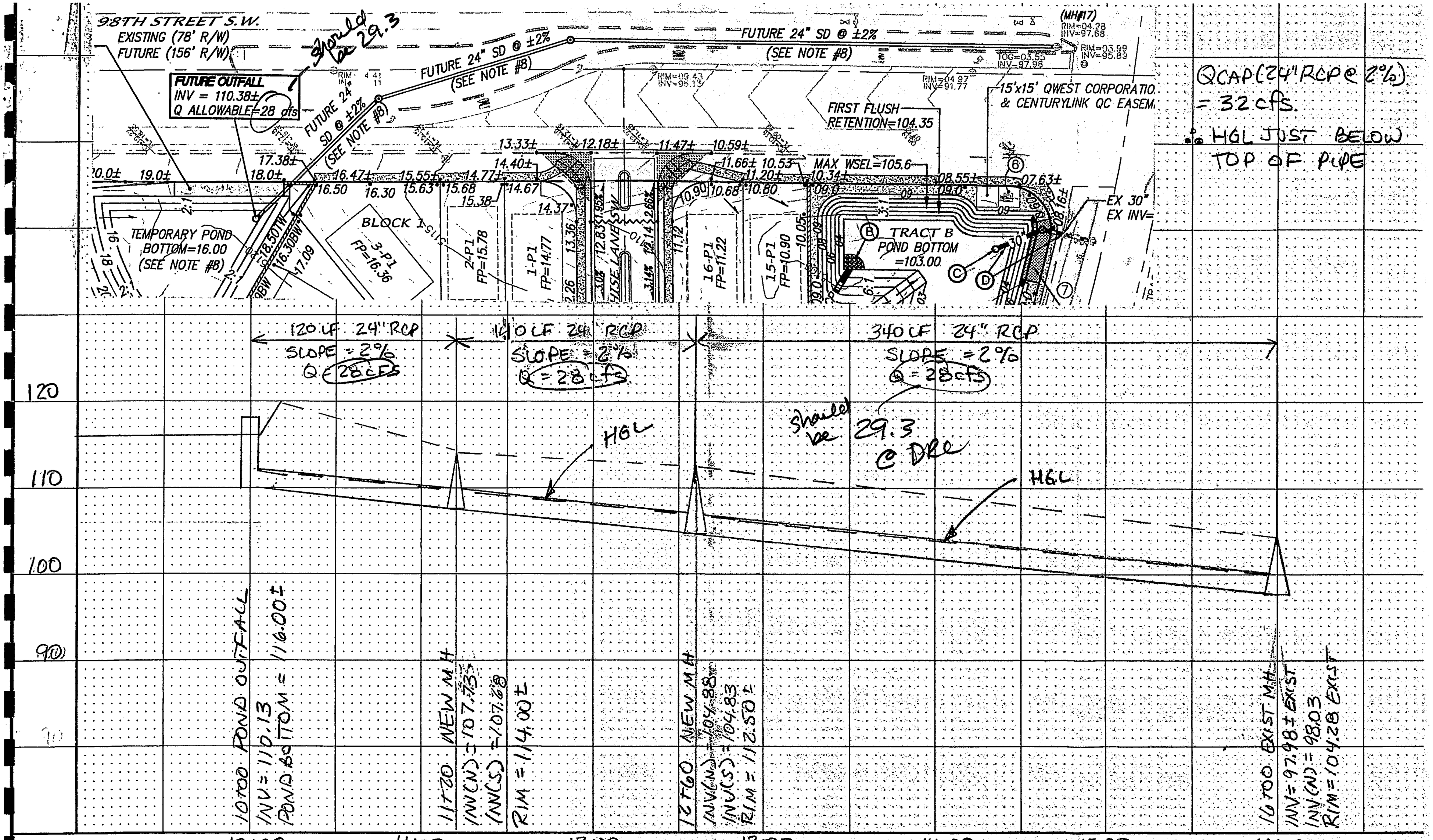


98TH ST. STORM DRAIN - PRELIMINARY P+P.

Copyright © 2014 D. MARK GOODWIN & ASSOCIATES, P.A. All Rights Reserved.

dmg D. Mark Goodwin & Associates, P.A.
Consulting Engineers
P.O. BOX 90606, ALBUQUERQUE,NM 87199
(505) 828-2200 FAX 797-9539

PROJECT Los Diamantes
SUBJECT Temporary Retention P
BY DLH DATE 6-23-15
CHECKED _____ DATE _____
SHEET ____ OF ____

TRACT A - Temporary Retention Pond

Design Details:

Design Volume = 15,189 cF
Req'd Volume = 13,874 cF
TOP POND = 18.0
BOTTOM POND = 16.00
Max WSEL (100 YR) = 17.84
SPILLWAY ELEV = 18.00 (EMERGENCY OVERFLOW)
Q100 (TRACT A) = 10.6 cfs

$Q = 3 \cdot L \cdot H^{3/2}$
$10.6 = 3 \cdot 76 (H)^{3/2}$
$H = .13' = 1.55''$ (depth over spillway

dmg D. Mark Goodwin & Associates, P.A.
Consulting Engineers
P.O. BOX 90606, ALBUQUERQUE, NM 87199
(505) 828-2200 FAX 797-9539

PROJECT
SUBJECT Hydrology Review Comments
BY DATE
CHECKED DATE
SHEET 1 OF 1

Comment #4 on 8/12/15 Letter

TRACT A

- $Q_{ALLOWABLE} = 29.30$ CFS
- Does 24" SD still work?

$$\text{slope} = \frac{110.38' - 97.68'}{600'} = 2.12\%$$

Design calls for ± 2.0%

Per DPM Plate 22.3 B-5 K for 24" pipe = 226.2

$$Q = K s^{1/2}$$
$$= 226.2 (\sqrt{0.02})$$
$$= 32.00 \text{ CFS}$$

| | Capacity | | Allowable |
|---|---|---|---|
| since | 32.00 CFS | > | 29.30 CFS |

YES ; 24" SD has capacity for allowable flows from Tract A.

dmg D. Mark Goodwin & Associates, P.A.
Consulting Engineers
P.O. BOX 90606, ALBUQUERQUE, NM 87199
(505) 828-2200 FAX 797-9539

PROJECT Los Diamantes Subdivisi
SUBJECT Hydrology Review Comments
BY ? DATE
CHECKED DATE
SHEET 1 OF 1

Comment #6 on 8/12/15 Letter

TRACT A RETENTION POND VOLUME:

Per DPM 22-5I, retention ponds must be designed for the 100 yr-10 day storm

Per DPM 22-2, Part A.5

1) $A_A = 5.67$ ac $\quad E_A = 0.44$

$A_B = 0$ AC $\quad E_B = 0.67$

$A_C = 0$ AC $\quad E_C = 0.99$

$A_D = 0$ AC $\quad E_D = 1.97$

2) compute E =

$$E = \frac{E_A A_A + E_B A_B + E_C A_C + E_D A_D}{A_A + A_B + A_C + A_D}$$

$$E = \frac{(0.44)(5.67) + 0 + 0 + 0}{5.67 + 0 + 0 + 0}$$

$E = 0.44''$

3.) $Volume_{360} = E(A_A + A_B + A_C + A_D)$

$V = (0.44'')(5.67)/12$

$Vol = 0.21$ ac-ft *

* ATYMO calculates Volume @ 0.32 ac-ft > 0.21
∴ 0.32 ac-ft is more conservative.

FOR 10 day storms use equation a-9 in DPM

$V_{10days} = V_{360} + A_D \cdot (P_{10days} - P_{360})/12$

$V_{10days} = 0.32^* + 0$

$V_{10days} = 0.32$ ac-ft ✓ Required for Retention

0.35 ac-ft Provided on Plan.

```
AHYMO PROGRAM (AHYMO-S4)                    - Version: S4.01a - Rel: 01a
     RUN DATE (MON/DAY/YR) = 06/05/2015
     START TIME (HR:MIN:SEC) = 09:34:03     USER NO.= M-GoodwinNMSiteA90075759
     INPUT FILE = C:\Program Files (x86)\AHYMO-S4\LASDIA_1.DAT

*S*************************************************************
*S
*S                    Los DIAMONTES
*S                    100 YEAR 6 HOUR STORM EVENT
*S
*S                    FILE: LASDIA_1.DAT
*S                    LAST REVISED: 6-5-15
*S                    NOAA ATLAS 2, VOL IV ZONE N 9
START                 TIME=0.0 HR PUNCH CODE=0 PRINT LINES=-6
LOCATION              ALBUQUERQUE
     City of Albuquerque soil infiltration values (LAND FACTORS) used for computations.
     Land Treatment     Initial Abstr.(in)    Unif. Infilt.(in/hour)
          A             0.65                  1.67
          B             0.50                  1.25
          C             0.35                  0.83
          D             0.10                  0.04

RAINFALL              TYPE=1 RAIN QUARTER=0.0
                      RAIN ONE=1.90 IN RAIN SIX=2.23 IN
                      RAIN DAY=2.70 IN DT=0.01 HRS

                 6-HOUR RAINFALL DIST. - BASED ON NOAA ATLAS 14 FOR CONVECTIVE AREAS (NM & AZ) - D1
                 DT =    0.010000 HOURS        END TIME =     6.000000 HOURS
                   0.0000  0.0004  0.0009  0.0013  0.0018  0.0022  0.0026
                   0.0031  0.0035  0.0040  0.0045  0.0050  0.0055  0.0059
                   0.0064  0.0069  0.0074  0.0079  0.0085  0.0090  0.0096
                   0.0101  0.0107  0.0112  0.0118  0.0123  0.0129  0.0136
                   0.0142  0.0148  0.0154  0.0160  0.0167  0.0173  0.0184
                   0.0197  0.0211  0.0224  0.0237  0.0251  0.0264  0.0277
                   0.0291  0.0306  0.0321  0.0336  0.0351  0.0367  0.0382
                   0.0397  0.0412  0.0428  0.0445  0.0461  0.0477  0.0494
                   0.0510  0.0527  0.0543  0.0560  0.0577  0.0595  0.0612
                   0.0629  0.0647  0.0664  0.0681  0.0699  0.0717  0.0735
                   0.0753  0.0771  0.0790  0.0808  0.0826  0.0844  0.0864
                   0.0885  0.0905  0.0926  0.0946  0.0966  0.0987  0.1007
                   0.1029  0.1052  0.1076  0.1099  0.1122  0.1145  0.1168
```

| | | | | | | |
|---|---|---|---|---|---|---|
| 0.1191 | 0.1225 | 0.1280 | 0.1335 | 0.1390 | 0.1445 | 0.1500 |
| 0.1555 | 0.1610 | 0.1665 | 0.1738 | 0.1812 | 0.1886 | 0.1959 |
| 0.2033 | 0.2107 | 0.2180 | 0.2254 | 0.2347 | 0.2450 | 0.2553 |
| 0.2656 | 0.2759 | 0.2862 | 0.2965 | 0.3068 | 0.3189 | 0.3343 |
| 0.3498 | 0.3653 | 0.3807 | 0.3962 | 0.4117 | 0.4271 | 0.4426 |
| 0.4693 | 0.4960 | 0.5227 | 0.5494 | 0.5761 | 0.6029 | 0.6296 |
| 0.6563 | 0.7126 | 0.7837 | 0.8549 | 0.9260 | 0.9972 | 1.0683 |
| 1.1395 | 1.2106 | 1.2712 | 1.3106 | 1.3501 | 1.3895 | 1.4289 |
| 1.4684 | 1.5078 | 1.5472 | 1.5867 | 1.6065 | 1.6263 | 1.6461 |
| 1.6659 | 1.6858 | 1.7056 | 1.7254 | 1.7452 | 1.7601 | 1.7726 |
| 1.7851 | 1.7976 | 1.8101 | 1.8225 | 1.8350 | 1.8475 | 1.8587 |
| 1.8674 | 1.8760 | 1.8847 | 1.8933 | 1.9020 | 1.9106 | 1.9193 |
| 1.9279 | 1.9343 | 1.9406 | 1.9469 | 1.9533 | 1.9596 | 1.9659 |
| 1.9723 | 1.9786 | 1.9839 | 1.9887 | 1.9935 | 1.9983 | 2.0031 |
| 2.0079 | 2.0127 | 2.0175 | 2.0214 | 2.0236 | 2.0257 | 2.0279 |
| 2.0301 | 2.0322 | 2.0344 | 2.0366 | 2.0387 | 2.0407 | 2.0426 |
| 2.0445 | 2.0464 | 2.0483 | 2.0503 | 2.0522 | 2.0541 | 2.0558 |
| 2.0574 | 2.0589 | 2.0605 | 2.0621 | 2.0637 | 2.0652 | 2.0668 |
| 2.0683 | 2.0698 | 2.0712 | 2.0726 | 2.0741 | 2.0755 | 2.0770 |
| 2.0784 | 2.0799 | 2.0812 | 2.0826 | 2.0840 | 2.0854 | 2.0868 |
| 2.0882 | 2.0896 | 2.0910 | 2.0919 | 2.0925 | 2.0932 | 2.0939 |
| 2.0946 | 2.0952 | 2.0959 | 2.0966 | 2.0972 | 2.0979 | 2.0985 |
| 2.0992 | 2.0998 | 2.1005 | 2.1011 | 2.1018 | 2.1024 | 2.1030 |
| 2.1036 | 2.1042 | 2.1048 | 2.1054 | 2.1060 | 2.1066 | 2.1072 |
| 2.1078 | 2.1084 | 2.1090 | 2.1096 | 2.1102 | 2.1107 | 2.1113 |
| 2.1119 | 2.1125 | 2.1131 | 2.1136 | 2.1142 | 2.1147 | 2.1153 |
| 2.1159 | 2.1164 | 2.1170 | 2.1175 | 2.1181 | 2.1186 | 2.1191 |
| 2.1197 | 2.1202 | 2.1207 | 2.1213 | 2.1218 | 2.1223 | 2.1228 |
| 2.1233 | 2.1238 | 2.1244 | 2.1249 | 2.1254 | 2.1259 | 2.1264 |
| 2.1269 | 2.1274 | 2.1279 | 2.1284 | 2.1289 | 2.1294 | 2.1299 |
| 2.1304 | 2.1309 | 2.1313 | 2.1318 | 2.1323 | 2.1328 | 2.1332 |
| 2.1337 | 2.1342 | 2.1346 | 2.1351 | 2.1356 | 2.1360 | 2.1365 |
| 2.1370 | 2.1374 | 2.1379 | 2.1383 | 2.1388 | 2.1392 | 2.1397 |
| 2.1401 | 2.1406 | 2.1410 | 2.1415 | 2.1419 | 2.1424 | 2.1428 |
| 2.1432 | 2.1436 | 2.1441 | 2.1445 | 2.1449 | 2.1454 | 2.1458 |
| 2.1462 | 2.1466 | 2.1470 | 2.1475 | 2.1479 | 2.1483 | 2.1487 |
| 2.1491 | 2.1495 | 2.1500 | 2.1504 | 2.1508 | 2.1512 | 2.1516 |
| 2.1520 | 2.1524 | 2.1528 | 2.1532 | 2.1536 | 2.1540 | 2.1544 |
| 2.1548 | 2.1552 | 2.1556 | 2.1560 | 2.1564 | 2.1568 | 2.1572 |
| 2.1576 | 2.1580 | 2.1584 | 2.1588 | 2.1591 | 2.1595 | 2.1599 |
| 2.1603 | 2.1607 | 2.1611 | 2.1614 | 2.1618 | 2.1622 | 2.1626 |
| 2.1630 | 2.1633 | 2.1637 | 2.1641 | 2.1645 | 2.1648 | 2.1652 |
| 2.1656 | 2.1660 | 2.1663 | 2.1667 | 2.1671 | 2.1674 | 2.1678 |

| | | | | | | |
|---|---|---|---|---|---|---|
| 2.1682 | 2.1685 | 2.1689 | 2.1693 | 2.1696 | 2.1700 | 2.1703 |
| 2.1707 | 2.1711 | 2.1714 | 2.1718 | 2.1721 | 2.1725 | 2.1728 |
| 2.1732 | 2.1736 | 2.1739 | 2.1743 | 2.1746 | 2.1750 | 2.1753 |
| 2.1757 | 2.1760 | 2.1763 | 2.1767 | 2.1770 | 2.1774 | 2.1777 |
| 2.1781 | 2.1784 | 2.1788 | 2.1791 | 2.1794 | 2.1798 | 2.1801 |
| 2.1805 | 2.1808 | 2.1811 | 2.1815 | 2.1818 | 2.1821 | 2.1825 |
| 2.1828 | 2.1831 | 2.1835 | 2.1838 | 2.1841 | 2.1844 | 2.1848 |
| 2.1851 | 2.1854 | 2.1858 | 2.1861 | 2.1864 | 2.1867 | 2.1871 |
| 2.1874 | 2.1877 | 2.1880 | 2.1883 | 2.1887 | 2.1890 | 2.1893 |
| 2.1896 | 2.1899 | 2.1903 | 2.1906 | 2.1909 | 2.1912 | 2.1915 |
| 2.1918 | 2.1921 | 2.1925 | 2.1928 | 2.1931 | 2.1934 | 2.1937 |
| 2.1940 | 2.1943 | 2.1946 | 2.1949 | 2.1952 | 2.1955 | 2.1959 |
| 2.1962 | 2.1965 | 2.1968 | 2.1971 | 2.1974 | 2.1977 | 2.1980 |
| 2.1983 | 2.1986 | 2.1989 | 2.1992 | 2.1995 | 2.1998 | 2.2001 |
| 2.2004 | 2.2007 | 2.2010 | 2.2013 | 2.2015 | 2.2018 | 2.2021 |
| 2.2024 | 2.2027 | 2.2030 | 2.2033 | 2.2036 | 2.2039 | 2.2042 |
| 2.2045 | 2.2047 | 2.2050 | 2.2053 | 2.2056 | 2.2059 | 2.2062 |
| 2.2065 | 2.2068 | 2.2070 | 2.2073 | 2.2076 | 2.2079 | 2.2082 |
| 2.2085 | 2.2087 | 2.2090 | 2.2093 | 2.2096 | 2.2099 | 2.2101 |
| 2.2104 | 2.2107 | 2.2110 | 2.2112 | 2.2115 | 2.2118 | 2.2121 |
| 2.2123 | 2.2126 | 2.2129 | 2.2132 | 2.2134 | 2.2137 | 2.2140 |
| 2.2143 | 2.2145 | 2.2148 | 2.2151 | 2.2153 | 2.2156 | 2.2159 |
| 2.2161 | 2.2164 | 2.2167 | 2.2170 | 2.2172 | 2.2175 | 2.2177 |
| 2.2180 | 2.2183 | 2.2185 | 2.2188 | 2.2191 | 2.2193 | 2.2196 |
| 2.2199 | 2.2201 | 2.2204 | 2.2206 | 2.2209 | 2.2212 | 2.2214 |
| 2.2217 | 2.2219 | 2.2222 | 2.2225 | 2.2227 | 2.2230 | 2.2232 |
| 2.2235 | 2.2237 | 2.2240 | 2.2242 | 2.2245 | 2.2248 | 2.2250 |
| 2.2253 | 2.2255 | 2.2258 | 2.2260 | 2.2263 | 2.2265 | 2.2268 |
| 2.2270 | 2.2273 | 2.2275 | 2.2278 | 2.2280 | 2.2283 | 2.2285 |
| 2.2288 | 2.2290 | 2.2293 | 2.2295 | 2.2298 | 2.2300 | |

```
*S*************************************************************
*** ******************
*S  LOS DIAMONTES Tract A (UNDEVELOPED)
*** ******************
*** AREA = 5.6729 ACRES
*** AREA = 247,111 SF
*** ******************
COMPUTE NM HYD        ID=1  HYD NO=100 AREA= 0.008864 SQ MI
                      PER A=100  PER B=0  PER C=0  PER D=0
                      TP=-.1333 HR  MASS RAIN=-1

     K =  0.162928HR    TP =  0.133300HR    K/TP RATIO =  1.222262     SHAPE CONSTANT, N =  2.911823
```

```
UNIT PEAK =    18.257     CFS    UNIT VOLUME =    0.9992        B =    274.56       P60 = 1.9000
AREA =      0.008864 SQ MI     IA =    0.65000 INCHES     INF =    1.67000 INCHES PER HOUR
RUNOFF COMPUTED BY INITIAL ABSTRACTION/INFILTRATION NUMBER METHOD - DT =   0.010000

PRINT HYD              ID=1 CODE=1

                                   PARTIAL HYDROGRAPH    100.00

    RUNOFF VOLUME =      0.67376 INCHES      =        0.3185 ACRE-FEET =13,874CF (refer to GrD Plan)
    PEAK DISCHARGE RATE =       10.60 CFS  AT    1.540 HOURS    BASIN AREA =   0.0089 SQ. MI.


FINISH

    NORMAL PROGRAM FINISH           END TIME (HR:MIN:SEC) = 09:34:03
```

# Appendix E

Sun Gate Estates Basin Boundary Exhibit 4

Sun Gate Estates Phase I Utility P&P sheet 30-31

Excerpts from Amole Hubbell 2013 Master Drainage Plan (AMAFCA)

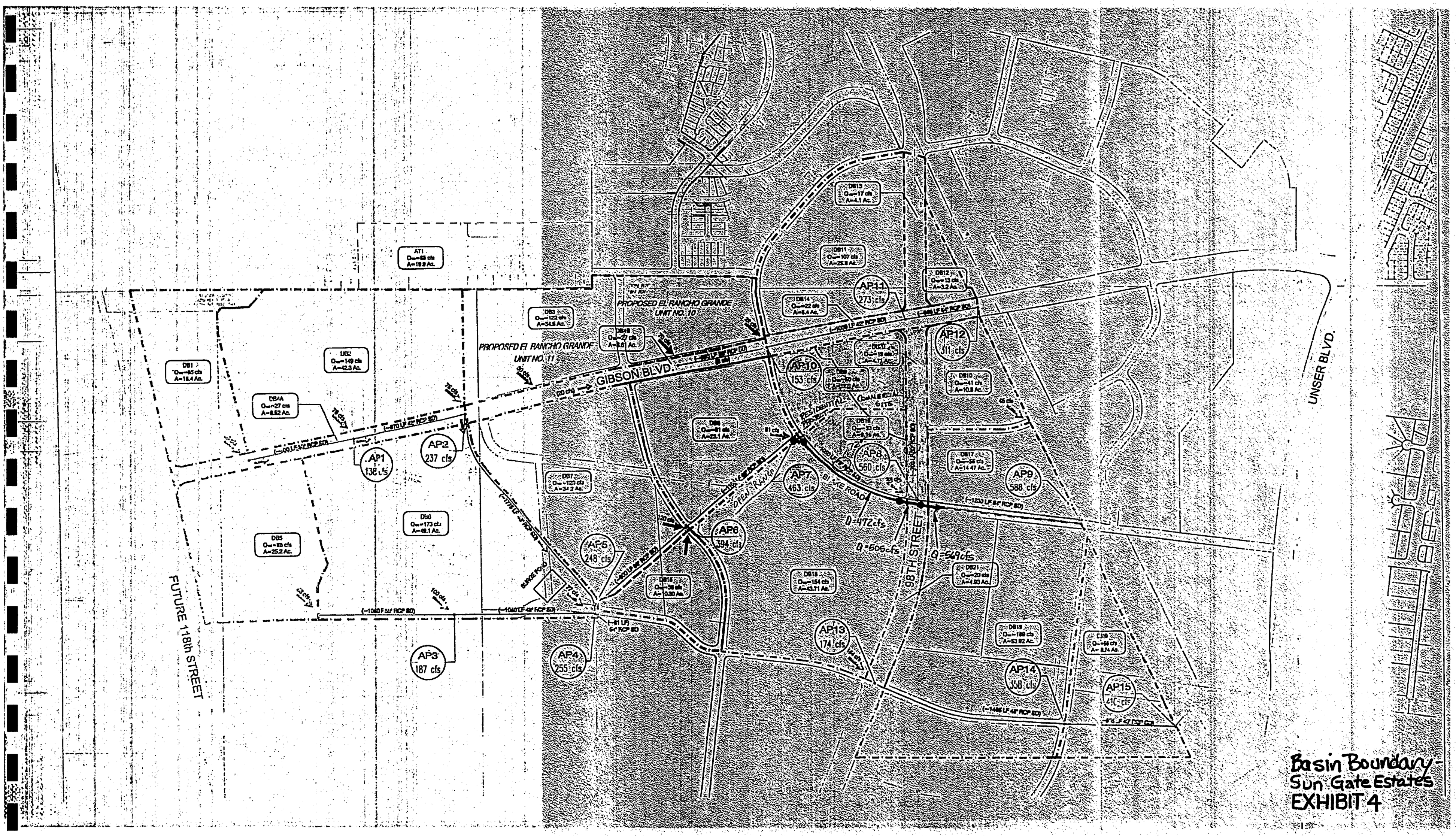


Basin Boundary
Sun Gate Estates
EXHIBIT 4

SCANNED BY

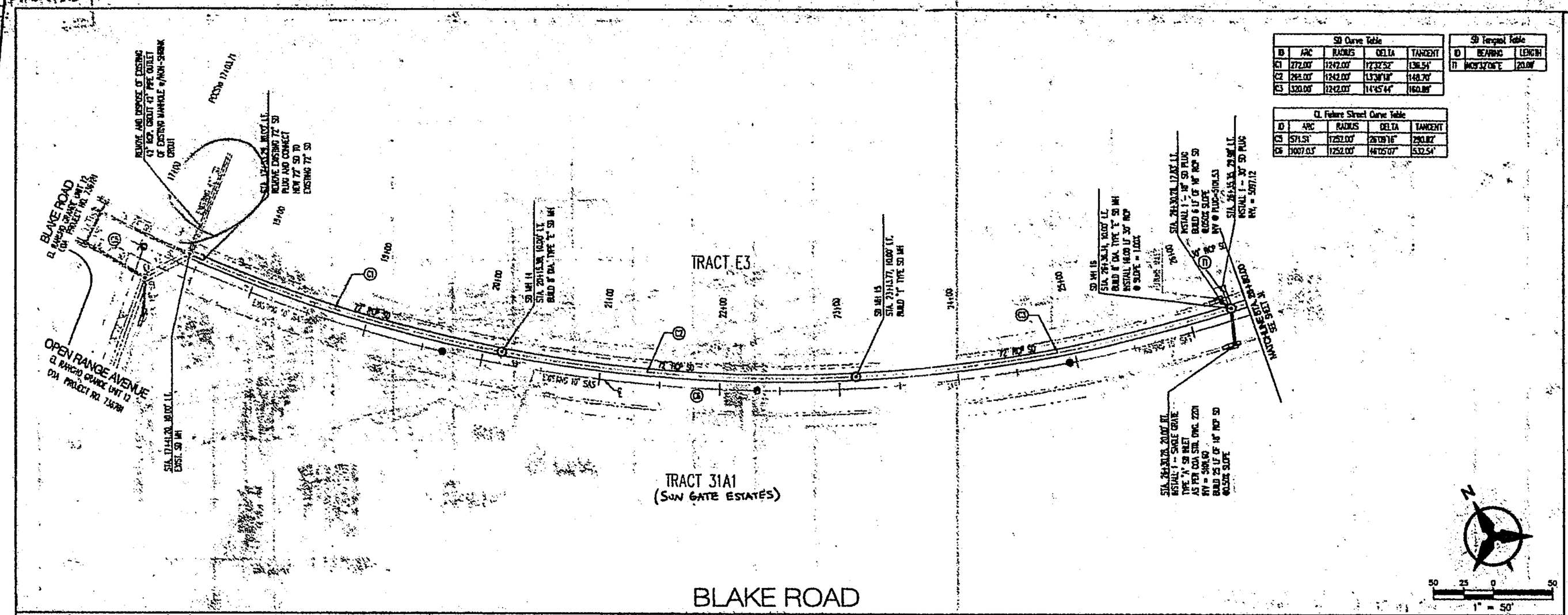


| SD Curve Table | | | | |
|---|---|---|---|---|
| ID | ARC | RADIUS | DELTA | TANGENT |
| C1 | 272.00' | 1242.00' | 12°32'52" | 136.54' |
| C2 | 266.00' | 1242.00' | 13°38'18" | 148.70' |
| C3 | 520.00' | 1242.00' | 14°45'44" | 260.88' |

| SD Tangent Table | | |
|---|---|---|
| ID | BEARING | LENGTH |
| T1 | N09°32'08"E | 20.00' |

| CL Future Street Curve Table | | | | |
|---|---|---|---|---|
| ID | ARC | RADIUS | DELTA | TANGENT |
| C5 | 571.51' | 1252.00' | 26°08'16" | 290.82' |
| C6 | 1007.03' | 1252.00' | 46°05'07" | 532.54' |

## GENERAL NOTES

1. THE CONTRACTOR SHALL FIELD VERIFY ALL EXISTING UTILITY LOCATIONS AND NOTIFY THE ENGINEER IMMEDIATELY OF ANY DISCREPANCIES.
2. ALL CURVE DATA AND DIMENSIONS ARE CALCULATED FROM CENTERLINE OF PIPE OR MANHOLE. ALL SAS & SD SLOPES ARE CALCULATED TO TRUE PIPE DIMENSIONS FROM INVERT TO INVERT. (PAY ITEMS ARE SHOWN IN PARENTHESES)
3. GRADE ELEVATIONS, WHERE NOTED, ARE FOR FLOWLINE OF STANDARD CURB UNLESS OTHERWISE SPECIFIED.
4. CONTRACTOR IS TO INSTALL A 4" X 4" X 5' POST AND END AT THE END OF EACH SANITARY SEWER SERVICE.
5. CONTRACTOR IS RESPONSIBLE FOR REPAIR AND/OR REPLACEMENT OF ALL UTILITY CONDUITS AND EXISTING LINES.
6. CONTRACTOR SHALL PROVIDE THE INSPECTORS WITH THE PROPOSED TESTING PLAN. THE PLAN MUST BE APPROVED BEFORE TESTING OPERATIONS BEGIN.
7. CONTRACTOR SHALL PARK EQUIPMENT AND VEHICLES AS NOT TO INTERFERE WITH NORMAL ACTIVITIES OF RESIDENTS OR OTHER CONTRACTORS ON SITE.
8. ANY DAMAGE TO THE EXISTING FACILITIES (CURB & GUTTER, PAVEMENT, SIDEWALKS, LANDSCAPING, UTILITY LINES, ETC.) DURING CONSTRUCTION SHALL BE REPLACED AT THE CONTRACTORS' EXPENSE.
9. MH RIMS & CATCH BASIN INLET ELEVATIONS, FIRE HYDRANT & FLANGE ELEVATIONS ARE APPROXIMATE. CONTRACTOR SHALL FIELD VERIFY AND ADJUST TO FINAL PAVEMENT GRADES.
10. SAS STATIONING FOLLOWS CL OF ROAD UNLESS OTHERWISE NOTED.
11. STATIONING OF DROP INLET IS TO MIDDLE OF DOWN HILL GRATE AT FACE OF CURB.
12. FLOWLINE ELEVATIONS FOR DROP INLETS ARE PROJECTED FROM FLOWLINE OF STANDARD CURB TO MIDDLE OF DOWNHILL GRATE.
13. FOR STORM DRAIN CONSTRUCTION, ALL RCP JOINTS SHALL NOT BE GROUTED PRIOR TO FINAL INSPECTION. FINAL INSPECTION SHALL DETERMINE WHICH JOINTS ARE TO BE GROUTED FOR FINAL ACCEPTANCE OF THE CONSTRUCTION.

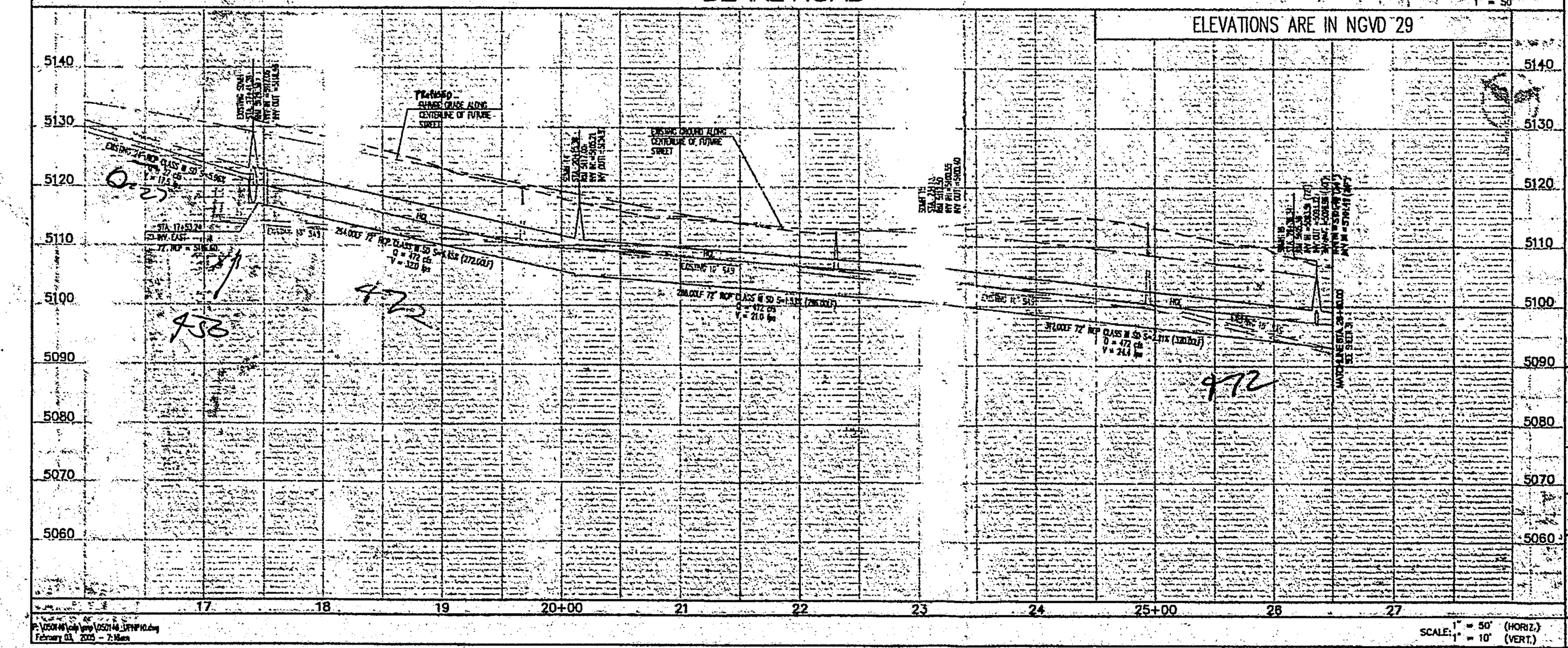


LEGEND

- DOUBLE WATER METER
- SINGLE WATER METER
- WATER LINE SHUTOFF VALVE
- WATER LINE TEE
- SAS LATERAL
- SAS MANHOLE
- STORM DRAIN MANHOLE
- STORM DRAIN INLET
- PROPOSED FIRE HYDRANT
- EXISTING WATER VALVE
- PROPOSED STREET LIGHT

Bohannan ▲ Huston

Courtyard I 7500 Jefferson St. NE • Albuquerque, NM 87109-4335

ENGINEERING • SPATIAL DATA • ADVANCED TECHNOLOGIES

CITY OF ALBUQUERQUE
PUBLIC WORKS DEPARTMENT

SUN GATE ESTATES PHASE I
UTILITY PLAN AND PROFILE
BLAKE ROAD

Design Review Committee | City Engineer/Approval | Last Design Update | No./Date/Yr. | No./Date/Yr.

MAR - 4 2005
CITY ENGINEER

City Project No. 736782 | Zone Map No. N-9-Z | Sheet 30 Of 37

AS-BUILT INFORMATION
CONTRACTOR: NEW MEXICO WEST
WORK STAKED BY: P.L.S.
INSPECTOR'S INITIALS: P.L.S.
DATE: 7/05
FIELD VERIFICATION BY: P.L.S.
DATE: 7/05
DRAWINGS CORRECTED BY: P.L.S.
DATE: 7/05
RECORDED BY
DATE
MICRO-FILM INFORMATION

BENCH MARKS
ACS-BRASS TABLET STAMPED "TRANS".
Geographic Position (NAD 1927)
N.M.-State Plane Coordinates (Central Zone)
X=354,899.45;Y=1,471,822.67
Ground-to-Grid Factor=0.999672921(AS Published)
M.C.=-0016'42"
SLD -1929 Elevation = 5118.370

SURVEY INFORMATION
FIELD NOTES
NO. | BY | DATE

ENGINEER'S SEAL
KRISTIAN J. SPENCER
NEW MEXICO
10044
LICENSED PROFESSIONAL ENGINEER
2-4-05

| No. | Date | REMARKS | BY |
|---|---|---|---|
| | | REVISIONS | |

DESIGN: DATE: 07/27/04
REVIEW: DATE: 07/27/04
APPROVAL: DATE: 08/19/04

Designed By: C.J.S.
Drawn By: B.J.G.
Checked By: C.J.S.

P:\U50M40\Gate Spring\U50M40_SEPHP10.dwg
February 03, 2005 - 7:16am

37
31

SCANNED BY PW

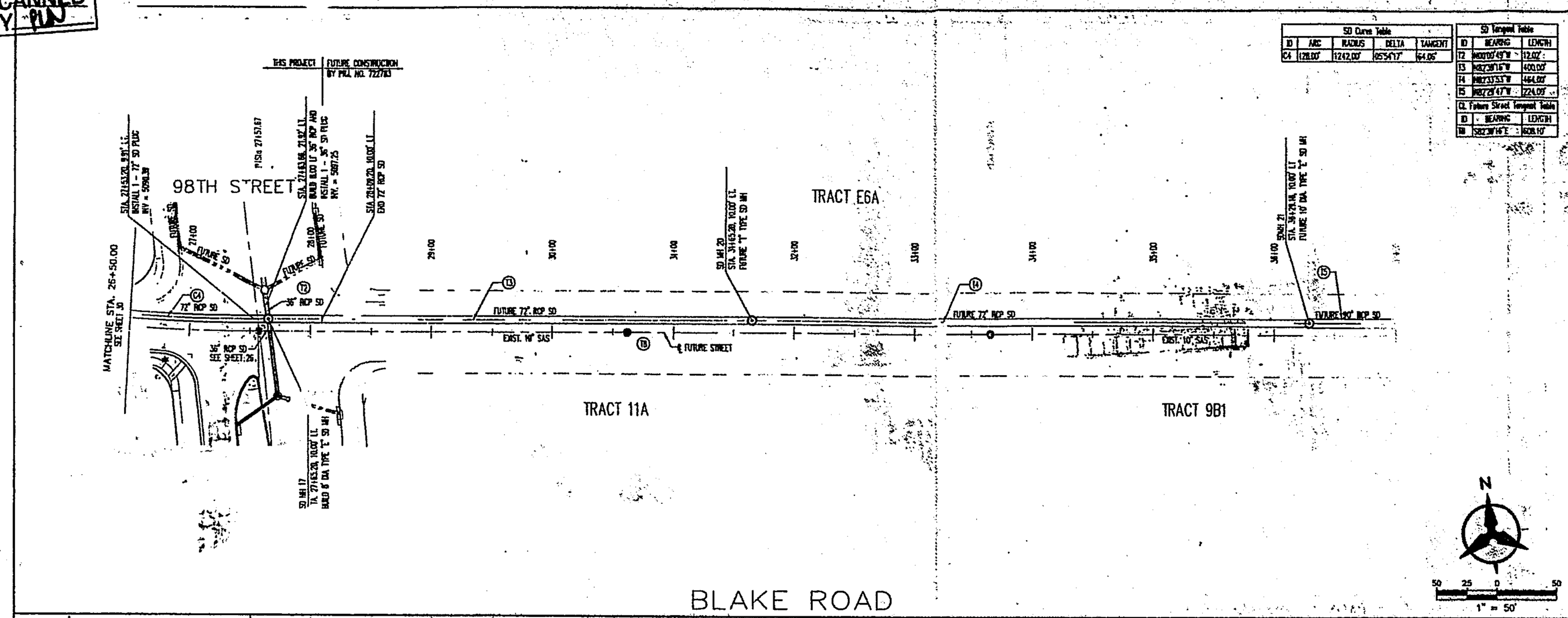


| SD Curve Table | | | | |
|---|---|---|---|---|
| ID | ARC | RADIUS | DELTA | TANGENT |
| C4 | 128.00' | 1242.00' | 6°55'47" | 64.06' |

| SD Tangent Table | | |
|---|---|---|
| ID | BEARING | LENGTH |
| T2 | N00°00'49"W | 12.02' |
| T3 | N82°28'15"W | 400.00' |
| T4 | N82°33'53"W | 464.00' |
| T5 | N82°28'47"W | 224.00' |

| Future Street Tangent Table | | |
|---|---|---|
| ID | BEARING | LENGTH |
| T8 | S82°38'16"E | 608.10' |

## GENERAL NOTES

1. THE CONTRACTOR SHALL FIELD VERIFY ALL EXISTING UTILITY LOCATIONS AND NOTIFY THE ENGINEER IMMEDIATELY OF ANY DISCREPANCIES.
2. ALL CURVE DATA AND DIMENSIONS ARE CALCULATED FROM CENTERLINE OF PIPE OR MANHOLE. ALL SAS & SD SLOPES ARE CALCULATED TO TRUE PIPE DIMENSIONS FROM INVERT TO INVERT. (PAY ITEMS ARE SHOWN IN PARENTHESES)
3. GRADE ELEVATIONS, WHERE NOTED, ARE FOR FLOWLINE OF STANDARD CURB UNLESS OTHERWISE SPECIFIED.
4. CONTRACTOR IS TO INSTALL A 4" X 4" X 5' POST AND END A 1" DIA. END OF EACH SANITARY SEWER SERVICE.
5. CONTRACTOR IS RESPONSIBLE FOR REPAIR AND/OR REPLACEMENT OF ALL UTILITY CONDUITS AND EXISTING LINES.
6. CONTRACTOR SHALL PROVIDE THE INSPECTORS WITH THE PROPOSED TESTING PLAN. THE PLAN MUST BE APPROVED BEFORE TESTING OPERATIONS BEGIN.
7. CONTRACTOR SHALL PARK EQUIPMENT AND VEHICLES AS NOT TO INTERFERE WITH NORMAL ACTIVITIES OF RESIDENTS OR OTHER CONTRACTORS ON SITE.
8. ANY DAMAGE TO THE EXISTING FACILITIES (CURB & GUTTER, PAVEMENT, CONDUITS, LANDSCAPING, UTILITY LINES, ETC.) DURING CONSTRUCTION SHALL BE REPLACED AT THE CONTRACTORS EXPENSE.
9. MH RIMS & CATCH BASIN INLET ELEVATIONS, FIRE HYDRANT & FLANGE ELEVATIONS ARE APPROXIMATE. CONTRACTOR SHALL FIELD VERIFY AND ADJUST TO FINAL PAVEMENT GRADES.
10. SAS STATIONING FOLLOWS CL OF ROAD UNLESS OTHERWISE NOTED.
11. STATIONING OF DROP INLET IS TO MIDDLE OF DOWN HILL GRATE AT FACE OF CURB.
12. FLOWLINE ELEVATIONS FOR DROP INLETS ARE PROJECTED FROM FLOWLINE OF STANDARD CURB TO MIDDLE OF DOWNHILL GRATE.
13. FOR STORM DRAIN CONSTRUCTION: ALL RCP JOINTS SHALL NOT BE GROUTED PRIOR TO FINAL INSPECTION. FINAL INSPECTION SHALL DETERMINE WHICH JOINTS ARE TO BE GROUTED FOR FINAL ACCEPTANCE OF THE CONSTRUCTION.

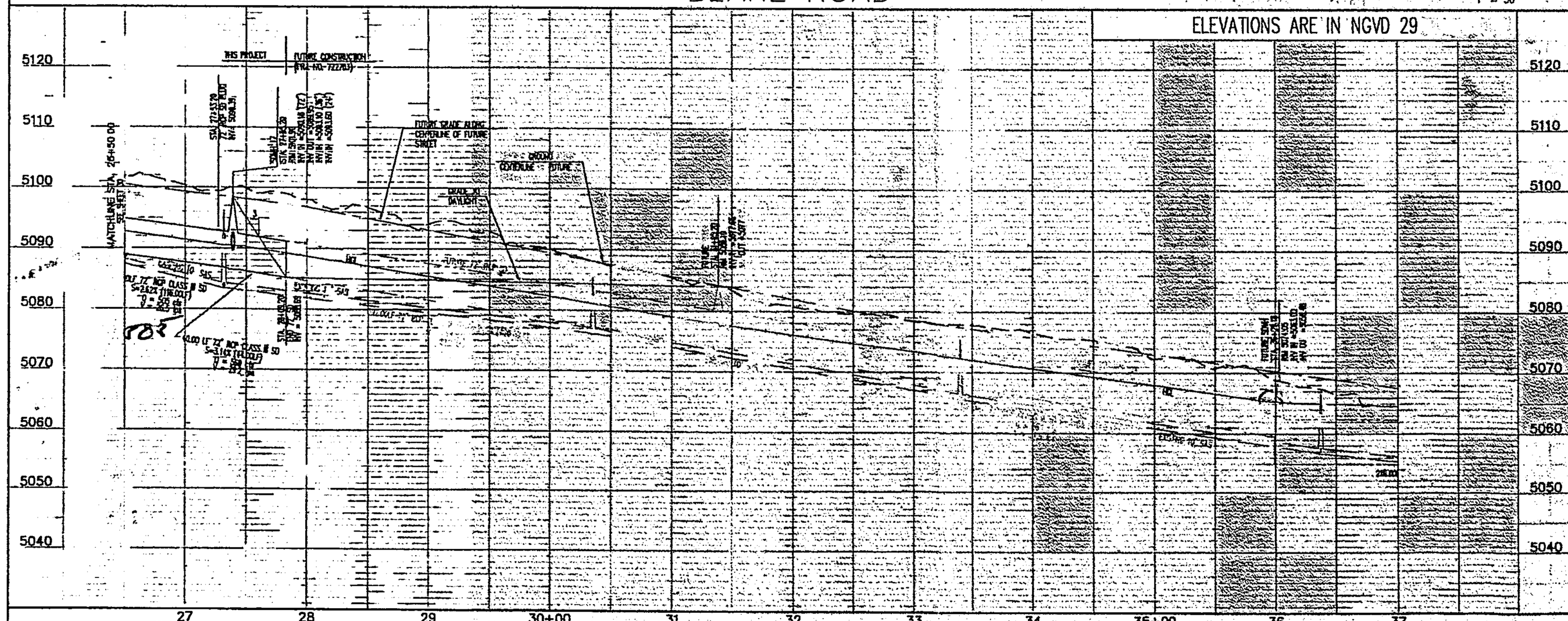


LEGEND

- DOUBLE WATER METER
- SINGLE WATER METER
- WATER LINE SHUTOFF VALVE
- WATER LINE TEE
- SAS LATERAL
- SAS MANHOLE
- STORM DRAIN MANHOLE
- STORM DRAIN INLET
- PROPOSED FIRE HYDRANT
- EXISTING WATER VALVE
- PROPOSED STREET LIGHT

AS-BUILT INFORMATION
CONTRACTOR: NASH CONCRETE
REVIEWED BY: BJS
INSPECTOR'S INITIALS: LCL DATE: 9/06
FIELD VERIFICATION BY: BJS DATE: 9/06
DRAWINGS CORRECTED BY: BJS DATE: 9/06
RECORDED BY: MICRO-FILM INFORMATION DATE:

BENCH MARKS
"ACS BRASS TABLET STAMPED "TRANS"
Geographic Position (NAD (1927))
N.A.L. State Plane Coordinates (Central Zone)
X= 354,899.45 Y= 1,471,822.67
Ground-to-Grid Factor= 0.999967921(As Published)
∡α = -00°16'42"
SLD 1929 Elevation = 5118.370

SURVEY INFORMATION
FIELD NOTES

| NO. | BY | DATE | REMARKS |
|---|---|---|---|
| | | | |

ENGINEER'S SEAL

CHRISTIAN L. ANDERSON 16014 LICENSED PROFESSIONAL ENGINEER 2-9-06

| No. | Date | REVISIONS | By |
|---|---|---|---|
| | | | |

DESIGN
Designed By: CJS DATE: 07/21/04
Drawn By: BJO DATE: 07/22/04
Checked By: CJS DATE: 08/19/04

Bohannan ▲ Huston
Courtyard I 7500 Jefferson St. NE | Albuquerque, NM 87109-4398
ENGINEERING ▲ SPATIAL DATA ▲ ADVANCED TECHNOLOGIES

CITY OF ALBUQUERQUE
PUBLIC WORKS DEPARTMENT

SUN GATE ESTATES PHASE I
UTILITY PLAN AND PROFILE
BLAKE ROAD

Design Review Committee | City Engineer Approval | Last Design Update | Mo./Day/Yr. | Mo./Day/Yr.
APR 2005
CITY ENGINEER

City Project No. 736782 | Zone Map No. N-9-Z | Sheet 31 of 37

P:\050446\cdp\prp\050446_UPNP1L.dwg
February 08, 2005 - 5:16pm

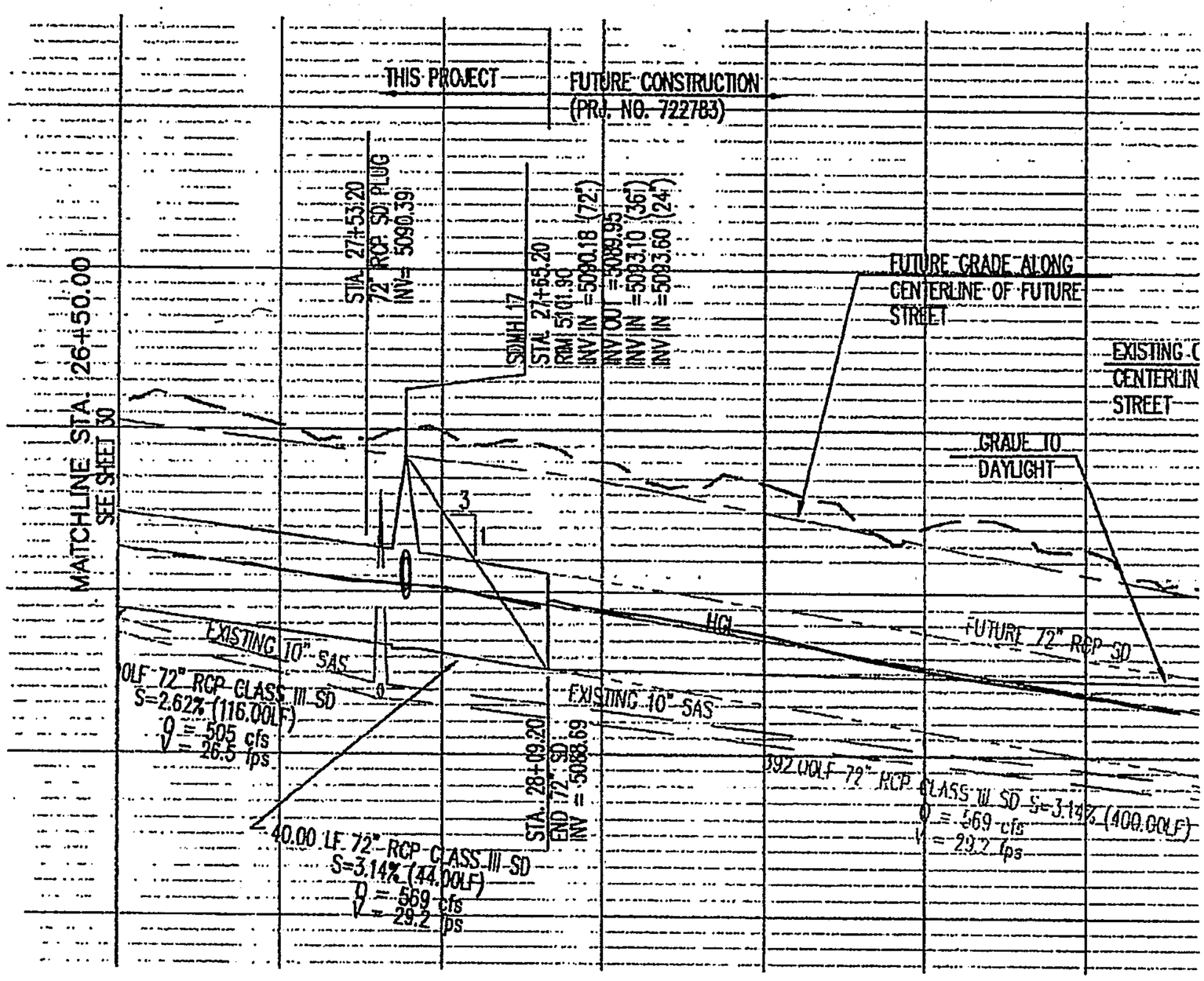


3-11-15

Based on N09/D007 and as-builts from Sun Gate Estates ph 1 736782 we determined the down stream capacity to

472 to 505 at stub
below stub at pad
569 at 96th St

Looks like a ~~pipe~~ storm drain in 96th is requiro

Curt Eckles / Valerie Haake 3-11-15

# CITY OF ALBUQUERQUE

PLANNING DEPARTMENT – Development Review Services

Richard J. Berry, Mayor

June 1, 2015

Diane Hoelzer, P.E.
**Mark Goodwin & Associates, P.A.**
P.O. Box 90606
Albuquerque, NM 87199

RE: **Los Diamantes Subdivision**
**Drainage Report, and Grading and Drainage Plan**
**Engineer's Stamp Date 3-24-2015 (File: N09D013)**

Dear Ms. Hoelzer:

Based upon the information provided in your submittal received 3-27-15, the above referenced plan cannot be approved for Preliminary Plat and Grading Permit until the following comments are addressed:

Conclusions from the meeting 3-11-15 were as follows:

- Per the meeting notes dated 3-11-15, the allowable discharge into the 30" stub at SDMH 16 (CPN 736782) is the difference between the upstream and downstream Q, or 505cfs - 472cfs = 33 cfs. This value matches that shown on Exhibit 4, Master SD Basin Map, for basin DB16.
- Per the same meeting notes, the Q at 98th St. is noted as 569cfs. The difference between the upstream and downstream Q at MH 17 is 569cfs – 505cfs = 64cfs. Exhibit 4 shows that DB20 (the roadway) discharges 19cfs, so 45 cfs is the allowable from DB9 (Exhibit 4).
- Per meeting notes, a storm drain in 98th was required.
- During the meeting we agreed that the street flows in Blake could be ignored due to the timing of the hydrograph.

Based on the above notes, revise the report to reflect the following:

- The total allowable developed discharge from this site, including Tract A is 45cfs (MH17) + 33cfs (MH16) = **78 cfs.**
- Based on a proration of area, Tract A is allowed 78cfs*(5.67 Ac/19.86 Ac) = **23 cfs.** Areas were taken from the preliminary plat.
- The allowable discharge for this subdivision is 78cfs -23cfs = **55cfs.** Per Exhibit 4, if 33cfs was intended to the existing stub, then the remaining 22cfs was intended to discharge to a storm drain in 98th St.

Comments:

1. Provide a plan to collect flows from developed Tract A and 98th St. roadway. CPN 736782 shows a stub at MH 17 that was intended to collect flows from DB9 and DB20. It is noted that there are inlets on 98th street near Blake at present.

PO Box 1293
Albuquerque
New Mexico 87103
www.cabq.gov

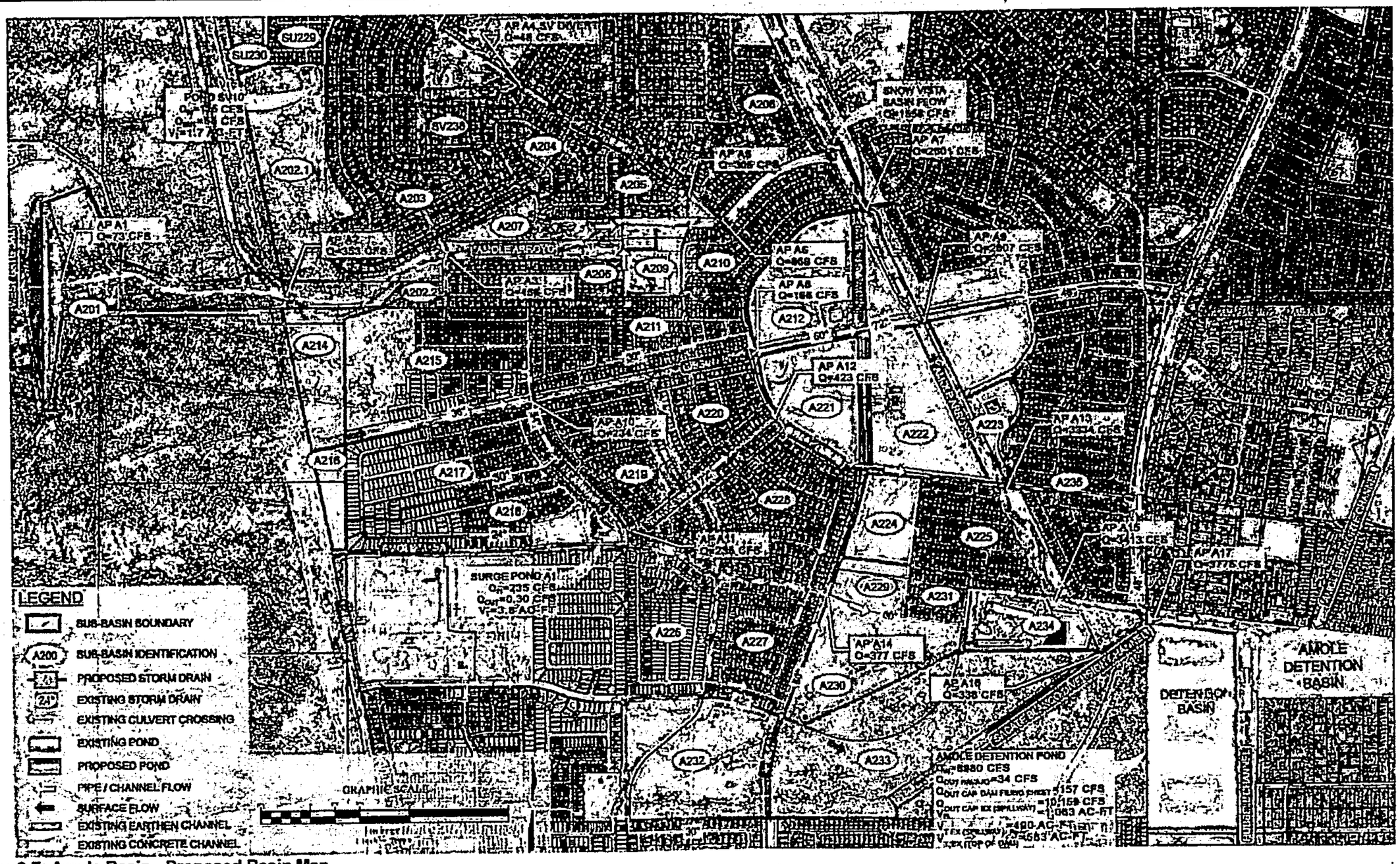


Figure 3-7: Amole Basin - Proposed Basin Map

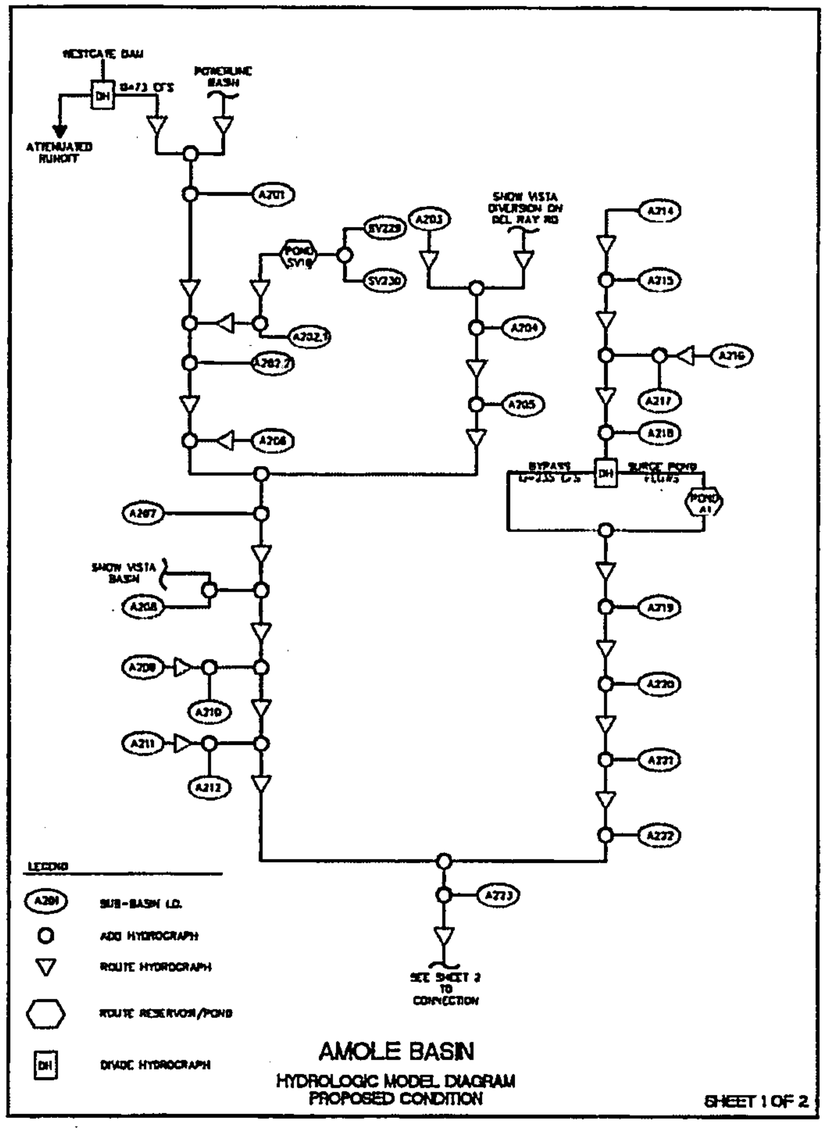


Figure 3-8: Amole Basin - Proposed Hydrologic Model Diagram

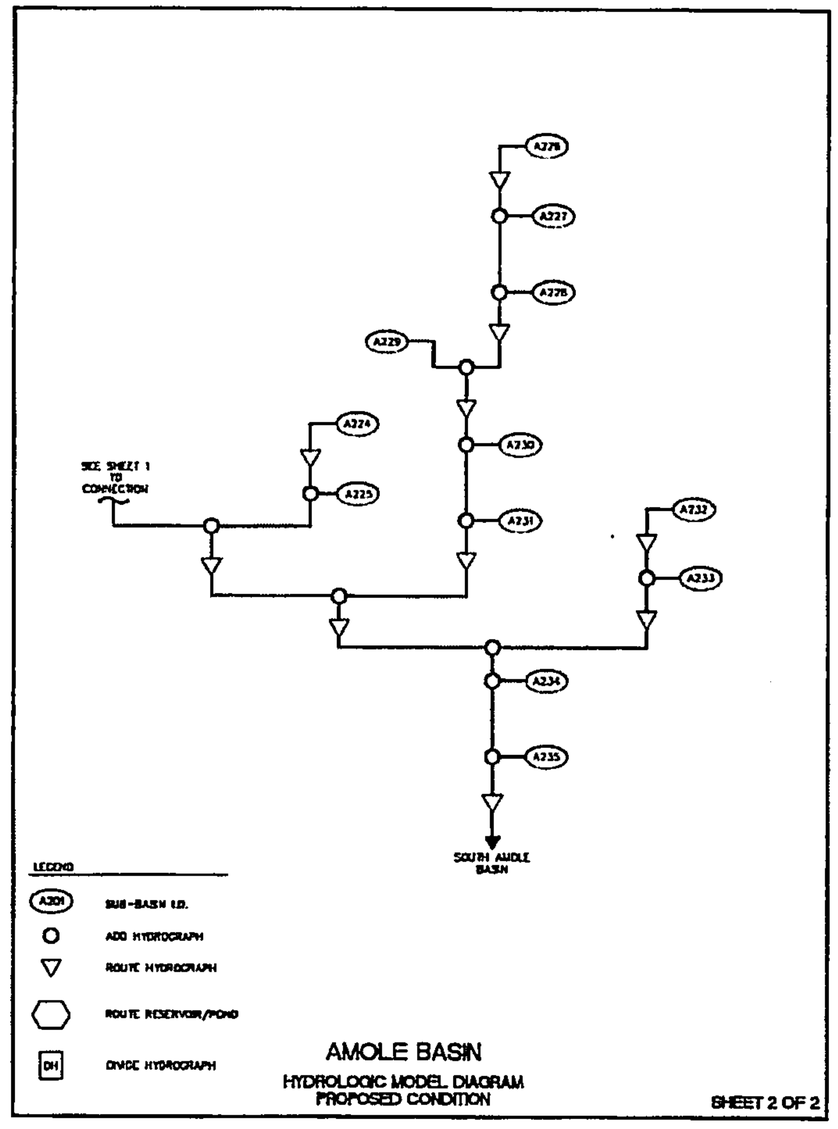


Figure 3-8 Continued: Amole Basin - Proposed Hydrologic Model Diagram

Table 3-8: Amole Basin - Proposed Sub-Basin Peak Discharge and Volumes

| Sub-Basin | Area (ac) | $Q_{100yr,24hr}$ (cfs) | $V_{100yr,24hr}$ (ac-ft) |
|---|---|---|---|
| A201 | 46 | 122.09 | 4.373 |
| A202.1 | 38 | 60.67 | 3.969 |
| A202.2 | 17 | 53.58 | 1.938 |
| A203 | 40 | 143.75 | 5.299 |
| A204 | 22 | 78.99 | 2.908 |
| A205 | 18 | 61.77 | 2.435 |
| A206 | 20 | 74.47 | 2.828 |
| A207 | 26 | 60.01 | 1.945 |
| A208 | 43 | 164.52 | 6.375 |
| A209 | 8 | 18.08 | 0.571 |
| A210 | 28 | 111.71 | 4.491 |
| A211 | 42 | 165.76 | 6.637 |
| A212 | 40 | 174.78 | 7.656 |
| A214 | 16 | 61.49 | 2.335 |
| A215 | 51 | 191.61 | 7.261 |
| A216 | 6 | 21.87 | 0.830 |
| A217 | 37 | 133.19 | 4.615 |
| A218 | 36 | 128.79 | 4.429 |
| A219 | 41 | 159.68 | 6.256 |
| A220 | 23 | 89.59 | 3.514 |
| A221 | 27 | 118.26 | 5.098 |
| A222 | 29 | 128.19 | 5.539 |
| A223 | 13 | 57.77 | 2.479 |
| A224 | 13 | 48.08 | 1.826 |
| A225 | 30 | 119.33 | 4.782 |
| A226 | 31 | 122.90 | 4.929 |
| A227 | 28 | 104.57 | 4.474 |
| A228 | 45 | 167.59 | 6.379 |
| A229 | 9 | 33.43 | 1.269 |
| A230 | 28 | 112.97 | 4.625 |
| A231 | 8 | 30.23 | 1.209 |
| A232 | 42 | 171.36 | 7.021 |
| A233 | 73 | 245.20 | 12.206 |
| A234 | 23 | 89.40 | 3.501 |
| A235 | 52 | 194.03 | 7.857 |

## 3.5 Amole Del Norte

### 3.5.1 98th & Central Basin

**Existing Conditions**

The 98th & Central Basin is approximately 0.81 sq. mi. This sub-area is generally bounded on the east by 98th Street and north by I-40, while on the south by Central Avenue and the west by the Powerline Channel. A two cell pond made up of Pond NE2 and Pond NE3 receives the area's runoff. The land uses in 98th & Central Area are platted undeveloped, industrial, commercial, and low density residential. Cross-lot drainage is the sub-area's main drainage issue due to the large undeveloped land. No off-site runoff enters the sub-area north of I-40.

Pond NE1 was designed to retain Sub-Basin NE105; however, hydrologic analyses concludes this pond is close to overtopping during the 100-year, 24-hour storm event; therefore, runoff will overflow the pond onto Avalon Road. This sub-area lacks drainage conveyance infrastructure. Without the conveyance infrastructure in place, developed and undeveloped lots experience large amounts of cross-lot drainage. There is only one storm drain system in the sub-area, beginning near the intersection of Volcano Road and 98th Street and runs through Pond NE2 outletting into Pond NE3. Since the majority of the sub-area is not conveyed via a sub-surface drainage system, large amounts of runoff spill into the pond. The two-cell pond outlets into a storm drain system located in the Tierra Bayita Area, which ultimately connects to the Tierra Bayita Channel. Refer to Appendix A for hydrologic data and existing hydrologic model diagram.

**Proposed Conditions**

The proposed land uses in 98th & Central Area are platted mass graded, industrial, commercial, high and low dense residential, and school. Proposed conditions and development have added a sub-surface storm drainage system to collect runoff and convey it to basin ponds to prevent excessive street flow. No off-site runoff enters the sub-area north of I-40.

The proposed conditions assume that the pond NE1 is abandoned and proposed storm drainage is allowed to collect and flow along the surface to Pond NE2 and NE3. As stated above, this surface flow shall be addressed with the residential development plans. A drainage conveyance system shall be installed to collect runoff from the area and convey it to Pond NE2 and NE3. To help alleviate flows to the Coors N-S pond, we recommend the use of an 18" orifice plate at the outlet structures of these ponds. Shallow cross-lot drainage will remain in upstream portions of this basin, although it is the intent of the plan to eliminateas much of the cross-lot drainage as possible with the proposed system. After development, the runoff from the area will be conveyed through drainage conveyance systems eliminating excess flow to the pond. Refer to Table 3-9 for hydrologic data and Figure 3-10 for proposed hydrologic model diagram.

**Recommendations:**

Below are the recommendations from 1999 Amole-Hubbell DMP for the basin along with the status of the recommendation.

- *Project AD1: Tower Sage Detention Basin and Outfall* – COMPLETED

Additional Recommendations for the basin based on updated basin analysis are below:

- Relocate the spillway for Pond NE2 to discharge to the south onto Central Avenue. Cost $222,800.
- Install storm drain system proposed in 98th & Central Basin per this DMP.
- Install 18" orifice in the outlet structures of ponds NE2 and NE3.

Current DRC
Project Number:

FIGURE 12

Date Submitted: 8/26/2015
Date Site Plan Approved:
Date Preliminary Plat Approved:
Date Preliminary Plat Expires:
DRB Project No.: 1010332
DRB Application No.:

## INFRASTRUCTURE LIST

EXHIBIT "A"
TO SUBDIVISION IMPROVEMENTS AGREEMENT
DEVELOPMENT REVIEW BOARD (D.R.B.) REQUIRED INFRASTRUCTURE LIST

**Los Diamantes Subdivision & Site Plan for Building Permit**
PROPOSED NAME OF PLAT AND/OR SITE DEVELOPMENT PLAN

**Tract 34D-1-A, LANDS OF SALAZAR FAMILY TRUST,JSJ,INVESTMENT COMPANY AND FALBA HANNETT AND LANDS OF CURB INC.**
EXISTING LEGAL DESCRIPTION PRIOR TO PLATTING ACTION

Following is a summary of PUBLIC/PRIVATE Infrastructure required to be constructed or financially guaranteed for the above development. This Listing is not necessarily a complete listing. During the SIA process and/or in the review of the construction drawings, if the DRC Chair determines that appurtenant items and/or unforeseen items have not been included in the infrastructure listing, the DRC Chair may include those items in the listing and related financial guarantee. Likewise, if the DRC Chair determines that appurtenant or non-essential items can be deleted from the listing, those items may be deleted as well as the related portions of the financial guarantees. All such revisions require approval by the DRC Chair, the User Department and agent/owner. If such approvals are obtained, these revisions to the listing will be incorporated administratively. In addition, any unforeseen items which arise during construction which are necessary to complete the project and which normally are the Subdivider's responsibility will be required as a condition of project acceptance and close out by the City.

| SIA Sequence # | COA DRC Project # | Size | Type of Improvement | Location | From | To | Private Inspector | City Inspector | City Cnst Engineer |
|---|---|---|---|---|---|---|---|---|---|
| | | | PAVING (All Streets - Private) | | | | | | |
| | | 26' FF | Perm Pvmt | Del Timbre Lane SW | End stub Road | Saddlehorn Trail SW | / | / | / |
| | | | C&G (both sides) | | Lot 22, Block 1 | | | | |
| | | 4' | Sidewalk (west side only) | | | | / | / | / |
| | | 26' FF | Perm Pvmt | Del Timbre Lane SW | Saddlehorn Trail SW | Range Trail SW | / | / | / |
| | | | C&G (both sides) | | | | | | |
| | | 4' | Sidewalk (both sides) (1) | | | | / | / | / |
| | | 28' FF | Perm Pvmt | Del Timbre Lane SW | Range Trail SW | Gold Dust Way SW | / | / | / |
| | | | C&G (both sides) | | | | | | |
| | | 4' | Sidewalk (both sides) (1) | | | | / | / | / |
| | | 28' FF | Perm Pvmt | Gold Dust Way SW | Del Timbre Lane SW | Sorral Way SW | / | / | / |
| | | | C&G (both sides) | | | | | | |
| | | 4' | Sidewalk (both side) (1) | | | | / | / | / |
| | | 28' FF | Perm Pvmt | Sorral Way SW | Gold Dust Way SW | Range Trail SW | / | / | / |
| | | | C&G (both sides) | | | | | | |
| | | 4' | Sidewalk (both side) (1) | | | | / | / | / |
| | | 26' FF | Perm Pvmt | Sorral Way SW | Range Trail SW | Saddlehorn Trail SW | / | / | / |
| | | | C&G (both sides) | | | | | | |
| | | 4' | Sidewalk (both side) (1) | | | | / | / | / |

| | | | | | | | |
|---|---|---|---|---|---|---|---|
| | **PAVING (All Streets - Private)** | | | | | | |
| 26' FF | Perm Pvmt | Saddlehorn Trail SW | Sorral Way SW | Del Timbre Lane SW | / | / | / |
| | C&G (both sides) | | | | | | |
| 4' | Sidewalk (both side) (1) | | | | / | / | / |
| 28' FF | Perm Pvmt | Range Trail SW | Sorral Way SW | Del Timbre Lane SW | / | / | / |
| | C&G (both side) | | | | | | |
| 4' | Sidewalk (both side) (1) | | | | / | / | / |
| 50' FF | Perm Pvmt | Range Trail SW | Del Timbre Lane SW | Blake Road | / | / | / |
| | C&G (both sides) | | | | | | |
| 6' | Median | | | | / | / | / |
| 6' | Sidewalk (both side) (1) | | | | / | / | / |
| 46' FF | Perm Pvmt | Cochise Lane SW | 98th Street SW | Gold Dust Way SW | / | / | / |
| | C&G (both sides) | | | | | | |
| 6' | Median | | | | / | / | / |
| 6' | Sidewalk (both side) (1) | | | | / | / | / |
| 6' | Sidewalk Connection | Tract B | Gold Dust Way SW | Blake Road | / | / | / |
| 6' | Sidewalk Connection | Lot 22, Block 1 | Del Timbre Lane SW | Gibson Blvd. | / | / | / |
| 6' | Sidewalk Connection | Tract B Easement | Saddlehorn Trail SW | Tract A | / | / | / |
| | **SIDEWALKS (PUBLIC)** | | | | | | |
| 6' | Sidewalk | Blake Road | Gibson Blvd. | 98th street | / | / | / |
| 6' | Sidewalk | 98th Street | Blake Road | Gibson Blvd | / | / | / |
| 6' | Sidewalk | Gibson Blvd | Blake Road | 98th Street | / | / | / |
| | **WATER (2WR Zone)** | | | | | | |
| 8" | Waterline (2WR) | Blake Road | Range Trail SW | Exist 12" WL (140 ft SE) | / | / | / |
| 8" | Waterline (2WR) | Range Trail SW | Blake Road | Sorral Way | / | / | / |
| 8" | Waterline (2WR) | Del Timbre Lane SW | Range Trail SW | Gold Dust Way SW | / | / | / |
| 4" | Waterline (2WR) | Del Timbre Lane SW | Range Trail SW | Lot 31 & 32 | / | / | / |
| 8" | Waterline (2WR) | Gold Dust Way SW | Del Timebre | Sorral Way SW | / | / | / |
| 8" | Waterline (2WR) | Cochise Lane SW | Gold Dust Way SW | Existing 12" WL in 98th Street | / | / | / |
| 8" | Waterline (2WR) | Sorral Way SW | Gold Dust Way SW | Tract B Easement | / | / | / |

| | | | | | | | |
|---|---|---|---|---|---|---|---|
| | | 8" | Waterline (2WR) | Tract B Easement | Sorral Way SW | Tract A Easement | / / / |
| | | 8" | Waterline (2WR) | Tract A Easement | Tract B Easement | Gibson Blvd. | / / / |
| | | 12" | Waterline (2WR) | Gibson Blvd. | Tract A Easement | Existing 12" WL | / / / |
| | | | **WATER (2W Zone)** | | | | |
| | | 8" | Waterline (2W) | Range Trail SW | Existing 12" WL at Blake Road | Del Timbre Lane SW | / / / |
| | | 8" | Waterline (2W) | Del Timbre Lane SW | Range Trail SW | Saddlehorn | / / / |
| | | 4" | Waterline (2W) | Del Timbre Lane SW | Saddlehorn Trail SW | End Stub Lot 22, Block 1 | / / / |
| | | 8" | Waterline (2W) | Saddlehorn Trail SW | Del Timbre Lane SW | Tract B Easement | / / / |
| | | 8" | Waterline (2W) | Tract B Easement | Saddlehorn | Tract A Easement | / / / |
| | | 8" | Waterline (2W) | Tract A Easement | Tract B Easement | Gibson Blvd | / / / |
| | | 12" | Waterline (2W) | Gibson Blvd. | Tract A Easement | Existing 20" WL Blake Road | / / / |
| | | | **SANITARY SEWER** | | | | |
| | | 8" | Sanitary Sewer | Cochise Lane SW | Gold Dust Way SW | Existing 8" SAS at 98th Street | / / / |
| | | 8" | Sanitary Sewer | Gold Dust Way SW | Del Timbre Lane SW | Sorral Way SW | / / / |
| | | 8" | Sanitary Sewer | Sorral Way SW | Gold Dust Way SW | Saddlehorn Trail SW | / / / |
| | | 8" | Sanitary Sewer | Saddlehorn Trail SW | Sorral Way SW | Del Timbre Lane SW | / / / |
| | | 8" | Sanitary Sewer | Del Timbre Lane SW | Gold Dust Way SW | Lot 22 Block 1, End Del Timbre Lane SW | / / / |

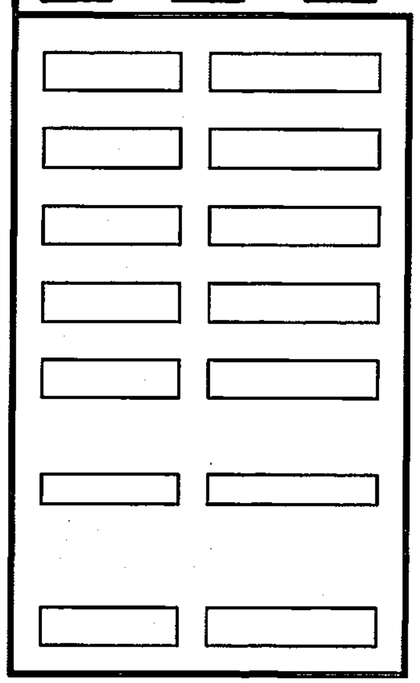

## DRAINAGE

| | | | | |
|---|---|---|---|---|
| Per design | Pond (0.81 ac-ft) | Tract B | | |
| Per design | Inlet | Gold Dust Way SW | | |
| 30" | Storm Drain | Tract B Easement | Gold Dust Way SW | Pond |
| Per design | Outfall Structure | Pond | | |
| 30" | Storm Drain | Tract B Easement | Pond | Exist 30" Storm Drain at Blake Road |
| Per design | Pond (0.35 ac-ft) | Tract A | | |
| 24" | Storm Drain (6) | 98th Street | Tract A | Exist Stub at Blake Road |

## WATER AUTHORITY

| | |
|---|---|
| Pro-Rata | $58,408.10 |

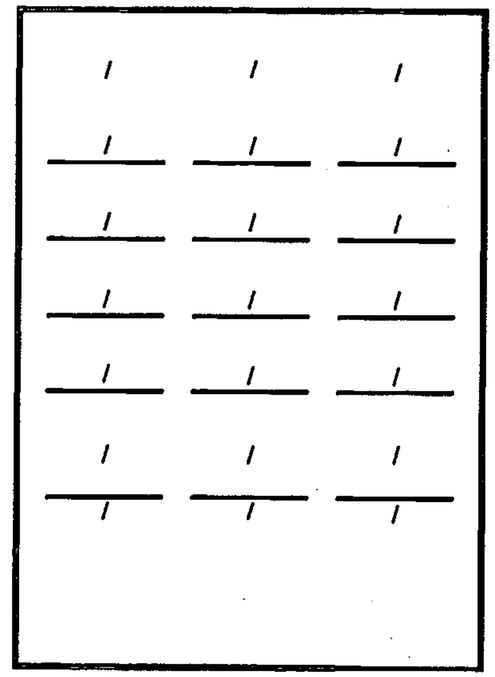

this listing. The items listed below are subject to the standard SIA requirements.

| Financially Guaranteed DRC # | Constructed Under DRC # | Size | Type of Improvement | Location | From | To | Construction Certification: Private Inspector P.E. | Construction Certification: City Cnst Engineer |
|---|---|---|---|---|---|---|---|---|
| | | | | | | | / / | / / |
| | | | | | | | / / | / / |

Approval of Creditable Items:

Impact Fee Admistrator Signature Date

Approval of Creditable Items:

City User Dept. Signature Date

1 Deferred sidewalk to comply with approved sidewalk exhibit
2 Waterline Infrastructure to include valves, fittings, service connections and fire hydrants
3 Storm Drain Infrastructure to include manholes and inlets
4 Grading & Drainage Certification required per DPM (Prior to release of Financial Guaranty) to include retaining walls as defined on the approved Grading Plan
5 SAS Infrastructure include manholes and service connections.
6 This item to be financially guaranteed separately

| AGENT / OWNER | DEVELOPMENT REVIEW BOARD MEMBER APPROVALS | |
|---|---|---|
| Diane Hoelzer, PE<br>NAME (print) | DRB CHAIR - date | PARKS & GENERAL SERVICES - date |
| MARK GOODWIN & ASSOCIATES<br>FIRM | TRANSPORTATION DEVELOPMENT - date | AMAFCA - date |
| SIGNATURE - date | UTILITY DEVELOPMENT - date | _____ - date |
| MAXIMUM TIME ALLOWED TO CONSTRUCT THE IMPROVEMENTS WITHOUT A DRB EXTENSION: N/A | CITY ENGINEER - date | _____ - date |

DESIGN REVIEW COMMITTEE REVISIONS

# Appendix A

Pond Design

First Flush Calculations

AHYMO printout

# LOS DIAMANTES SUBUDIVISION

## FIRST FLUSH HYDROLOGY CALCULATIONS

N-value = UNITS/ACRE = 80/14.1907 = 5.64

For N-value less than 6 =} Treatment D = 7*((N)**2+(5*N))**0.5 = 54

Use Land treatment D = 54

Land treatment C = 23

Land treatment B = 23

AHYMO: Zone Atlas: N-9 =} P(60)=1.90", P(36)=2.25", P(24)= 2.70"

RESULTS: Q(100)= 51.61 cfs (100 year 6 hour)

FIRST FLUSH: (0.34 inches)(618,147 SF)(.54))/(12 inches per foot) = 9,458 cu.ft.

DLH 6-2-15 (dmg project 14031)

dmg D. Mark Goodwin & Associates, P.A.
Consulting Engineers
P.O. BOX 90606, ALBUQUERQUE,NM 87199
(505) 828-2200 FAX 797-9539

PROJECT Los Diamantes
SUBJECT Pond Volume Calcs.
BY DLH DATE 6-5-15
CHECKED _____ DATE _____
SHEET 1 OF 2

LOS DIAMANTES POND

| ELEV. | AREA | VOLUME | Σ VOL. | ΣAc.Ft. |
|---|---|---|---|---|
| 108. | 13286.5 | 12529.3 | 47,766.1 | 1.0965 |
| 107. | 11787.1 | 11028.3 | 35,236.8 | 0.8089 |
| 106. | 10286.5 | 9535.9 | 24208.5 | 0.5558 |
| 105. | 8804.5 | 8062.6 | 14672.6 | 0.3368 |
| 104. | 7342.8 | 6610.0 | 6610.0 | 0.1517 |
| 103. | 5903.4 | 0 | 0 | 0 |

$VOL = \frac{1}{3} D(A_1 + A_2 + \sqrt{A_1 A_2})$

FIRST FLUSH VOLUME REQ'D = 9458 cu.ft. = 0.21713 ACFT

CALCULATE DEPTH TO F.F. VOLUME IN POND:

$$\frac{9458 - 6610}{14672.6 - 6610} = \frac{2848.}{8062.6} = 0.35$$

POND ELEVATION TO FIRST FLUSH VOLUME = 104.35

CALCULATE WEIR SPILLWAY OUTFALL:

$$Q = C \cdot L \cdot H^{3/2}$$
$$= 3(11) H^{3/2}$$

17.29 cfs = .65 (@ 105.0)
69.94 cfs = 1.65 (@ 106.0)

RATING TABLE IN AMYMD

| DISCHARGE | ACFT | ELE. |
|---|---|---|
| 0 | 0 | 103. |
| 0.01 | .21713 | 104.35 |
| 17.29 | .3368 | 105. |
| 69.94 | .5558 | 106. |

D. Mark Goodwin & Associates, P.A.
Consulting Engineers
P.O. BOX 90606, ALBUQUERQUE,NM 87199
(505) 828-2200 FAX 797-9539

PROJECT Los Diamantes
SUBJECT
BY DLH DATE 6-5-15
CHECKED DATE
SHEET 2 OF 2

# AHYMO RESULTS

Q(100) = 54.34cfs (from Project Site)

POND RESULTS:

Q(100) = 48.74cfs (to 30" SD)

Max WSEL = 105.6'

Max Stor. Volume = 0.4676 ACFt

Stor. Volume design = 0.8089 ACFt.

```
    AHYMO PROGRAM (AHYMO-S4)                    - Version: S4.01a - Rel: 01a
         RUN DATE (MON/DAY/YR) = 06/03/2015
         START TIME (HR:MIN:SEC) = 16:31:59     USER NO.= M-GoodwinNMSiteA90075759
         INPUT FILE = C:\Program Files (x86)\AHYMO-S4\LASDIA_9.DAT

*S*************************************************************
*S
*S                   Los DIAMONTES
*S                   100 YEAR 6 HOUR STORM EVENT
*S
*S                   FILE: LASDIA_9.DAT
*S                   LAST REVISED: 6-3-15
*S                   NOAA ATLAS 2, VOL IV ZONE N 9
START               TIME=0.0 HR PUNCH CODE=0 PRINT LINES=-6
LOCATION            ALBUQUERQUE
     City of Albuquerque soil infiltration values (LAND FACTORS) used for computations.
     Land Treatment     Initial Abstr.(in)    Unif. Infilt.(in/hour)
          A             0.65                  1.67
          B             0.50                  1.25
          C             0.35                  0.83
          D             0.10                  0.04

RAINFALL            TYPE=1 RAIN QUARTER=0.0
                    RAIN ONE=1.90 IN RAIN SIX=2.23 IN
                    RAIN DAY=2.70 IN DT=0.01 HRS

               6-HOUR RAINFALL DIST. - BASED ON NOAA ATLAS 14 FOR CONVECTIVE AREAS (NM & AZ) - D1
               DT =   0.010000 HOURS       END TIME =     6.000000 HOURS
                 0.0000  0.0004  0.0009  0.0013  0.0018  0.0022  0.0026
                 0.0031  0.0035  0.0040  0.0045  0.0050  0.0055  0.0059
                 0.0064  0.0069  0.0074  0.0079  0.0085  0.0090  0.0096
                 0.0101  0.0107  0.0112  0.0118  0.0123  0.0129  0.0136
                 0.0142  0.0148  0.0154  0.0160  0.0167  0.0173  0.0184
                 0.0197  0.0211  0.0224  0.0237  0.0251  0.0264  0.0277
                 0.0291  0.0306  0.0321  0.0336  0.0351  0.0367  0.0382
                 0.0397  0.0412  0.0428  0.0445  0.0461  0.0477  0.0494
                 0.0510  0.0527  0.0543  0.0560  0.0577  0.0595  0.0612
                 0.0629  0.0647  0.0664  0.0681  0.0699  0.0717  0.0735
                 0.0753  0.0771  0.0790  0.0808  0.0826  0.0844  0.0864
                 0.0885  0.0905  0.0926  0.0946  0.0966  0.0987  0.1007
                 0.1029  0.1052  0.1076  0.1099  0.1122  0.1145  0.1168
                 0.1191  0.1225  0.1280  0.1335  0.1390  0.1445  0.1500
                 0.1555  0.1610  0.1665  0.1738  0.1812  0.1886  0.1959
                 0.2033  0.2107  0.2180  0.2254  0.2347  0.2450  0.2553
                 0.2656  0.2759  0.2862  0.2965  0.3068  0.3189  0.3343
                 0.3498  0.3653  0.3807  0.3962  0.4117  0.4271  0.4426
                 0.4693  0.4960  0.5227  0.5494  0.5761  0.6029  0.6296
                 0.6563  0.7126  0.7837  0.8549  0.9260  0.9972  1.0683
                 1.1395  1.2106  1.2712  1.3106  1.3501  1.3895  1.4289
                 1.4684  1.5078  1.5472  1.5867  1.6065  1.6263  1.6461
                 1.6659  1.6858  1.7056  1.7254  1.7452  1.7601  1.7726
                 1.7851  1.7976  1.8101  1.8225  1.8350  1.8475  1.8587
                 1.8674  1.8760  1.8847  1.8933  1.9020  1.9106  1.9193
                 1.9279  1.9343  1.9406  1.9469  1.9533  1.9596  1.9659
                 1.9723  1.9786  1.9839  1.9887  1.9935  1.9983  2.0031
                 2.0079  2.0127  2.0175  2.0214  2.0236  2.0257  2.0279
```

| | | | | | | |
|---|---|---|---|---|---|---|
| 2.0301 | 2.0322 | 2.0344 | 2.0366 | 2.0387 | 2.0407 | 2.0426 |
| 2.0445 | 2.0464 | 2.0483 | 2.0503 | 2.0522 | 2.0541 | 2.0558 |
| 2.0574 | 2.0589 | 2.0605 | 2.0621 | 2.0637 | 2.0652 | 2.0668 |
| 2.0683 | 2.0698 | 2.0712 | 2.0726 | 2.0741 | 2.0755 | 2.0770 |
| 2.0784 | 2.0799 | 2.0812 | 2.0826 | 2.0840 | 2.0854 | 2.0868 |
| 2.0882 | 2.0896 | 2.0910 | 2.0919 | 2.0925 | 2.0932 | 2.0939 |
| 2.0946 | 2.0952 | 2.0959 | 2.0966 | 2.0972 | 2.0979 | 2.0985 |
| 2.0992 | 2.0998 | 2.1005 | 2.1011 | 2.1018 | 2.1024 | 2.1030 |
| 2.1036 | 2.1042 | 2.1048 | 2.1054 | 2.1060 | 2.1066 | 2.1072 |
| 2.1078 | 2.1084 | 2.1090 | 2.1096 | 2.1102 | 2.1107 | 2.1113 |
| 2.1119 | 2.1125 | 2.1131 | 2.1136 | 2.1142 | 2.1147 | 2.1153 |
| 2.1159 | 2.1164 | 2.1170 | 2.1175 | 2.1181 | 2.1186 | 2.1191 |
| 2.1197 | 2.1202 | 2.1207 | 2.1213 | 2.1218 | 2.1223 | 2.1228 |
| 2.1233 | 2.1238 | 2.1244 | 2.1249 | 2.1254 | 2.1259 | 2.1264 |
| 2.1269 | 2.1274 | 2.1279 | 2.1284 | 2.1289 | 2.1294 | 2.1299 |
| 2.1304 | 2.1309 | 2.1313 | 2.1318 | 2.1323 | 2.1328 | 2.1332 |
| 2.1337 | 2.1342 | 2.1346 | 2.1351 | 2.1356 | 2.1360 | 2.1365 |
| 2.1370 | 2.1374 | 2.1379 | 2.1383 | 2.1388 | 2.1392 | 2.1397 |
| 2.1401 | 2.1406 | 2.1410 | 2.1415 | 2.1419 | 2.1424 | 2.1428 |
| 2.1432 | 2.1436 | 2.1441 | 2.1445 | 2.1449 | 2.1454 | 2.1458 |
| 2.1462 | 2.1466 | 2.1470 | 2.1475 | 2.1479 | 2.1483 | 2.1487 |
| 2.1491 | 2.1495 | 2.1500 | 2.1504 | 2.1508 | 2.1512 | 2.1516 |
| 2.1520 | 2.1524 | 2.1528 | 2.1532 | 2.1536 | 2.1540 | 2.1544 |
| 2.1548 | 2.1552 | 2.1556 | 2.1560 | 2.1564 | 2.1568 | 2.1572 |
| 2.1576 | 2.1580 | 2.1584 | 2.1588 | 2.1591 | 2.1595 | 2.1599 |
| 2.1603 | 2.1607 | 2.1611 | 2.1614 | 2.1618 | 2.1622 | 2.1626 |
| 2.1630 | 2.1633 | 2.1637 | 2.1641 | 2.1645 | 2.1648 | 2.1652 |
| 2.1656 | 2.1660 | 2.1663 | 2.1667 | 2.1671 | 2.1674 | 2.1678 |
| 2.1682 | 2.1685 | 2.1689 | 2.1693 | 2.1696 | 2.1700 | 2.1703 |
| 2.1707 | 2.1711 | 2.1714 | 2.1718 | 2.1721 | 2.1725 | 2.1728 |
| 2.1732 | 2.1736 | 2.1739 | 2.1743 | 2.1746 | 2.1750 | 2.1753 |
| 2.1757 | 2.1760 | 2.1763 | 2.1767 | 2.1770 | 2.1774 | 2.1777 |
| 2.1781 | 2.1784 | 2.1788 | 2.1791 | 2.1794 | 2.1798 | 2.1801 |
| 2.1805 | 2.1808 | 2.1811 | 2.1815 | 2.1818 | 2.1821 | 2.1825 |
| 2.1828 | 2.1831 | 2.1835 | 2.1838 | 2.1841 | 2.1844 | 2.1848 |
| 2.1851 | 2.1854 | 2.1858 | 2.1861 | 2.1864 | 2.1867 | 2.1871 |
| 2.1874 | 2.1877 | 2.1880 | 2.1883 | 2.1887 | 2.1890 | 2.1893 |
| 2.1896 | 2.1899 | 2.1903 | 2.1906 | 2.1909 | 2.1912 | 2.1915 |
| 2.1918 | 2.1921 | 2.1925 | 2.1928 | 2.1931 | 2.1934 | 2.1937 |
| 2.1940 | 2.1943 | 2.1946 | 2.1949 | 2.1952 | 2.1955 | 2.1959 |
| 2.1962 | 2.1965 | 2.1968 | 2.1971 | 2.1974 | 2.1977 | 2.1980 |
| 2.1983 | 2.1986 | 2.1989 | 2.1992 | 2.1995 | 2.1998 | 2.2001 |
| 2.2004 | 2.2007 | 2.2010 | 2.2013 | 2.2015 | 2.2018 | 2.2021 |
| 2.2024 | 2.2027 | 2.2030 | 2.2033 | 2.2036 | 2.2039 | 2.2042 |
| 2.2045 | 2.2047 | 2.2050 | 2.2053 | 2.2056 | 2.2059 | 2.2062 |
| 2.2065 | 2.2068 | 2.2070 | 2.2073 | 2.2076 | 2.2079 | 2.2082 |
| 2.2085 | 2.2087 | 2.2090 | 2.2093 | 2.2096 | 2.2099 | 2.2101 |
| 2.2104 | 2.2107 | 2.2110 | 2.2112 | 2.2115 | 2.2118 | 2.2121 |
| 2.2123 | 2.2126 | 2.2129 | 2.2132 | 2.2134 | 2.2137 | 2.2140 |
| 2.2143 | 2.2145 | 2.2148 | 2.2151 | 2.2153 | 2.2156 | 2.2159 |
| 2.2161 | 2.2164 | 2.2167 | 2.2170 | 2.2172 | 2.2175 | 2.2177 |
| 2.2180 | 2.2183 | 2.2185 | 2.2188 | 2.2191 | 2.2193 | 2.2196 |
| 2.2199 | 2.2201 | 2.2204 | 2.2206 | 2.2209 | 2.2212 | 2.2214 |
| 2.2217 | 2.2219 | 2.2222 | 2.2225 | 2.2227 | 2.2230 | 2.2232 |
| 2.2235 | 2.2237 | 2.2240 | 2.2242 | 2.2245 | 2.2248 | 2.2250 |
| 2.2253 | 2.2255 | 2.2258 | 2.2260 | 2.2263 | 2.2265 | 2.2268 |

```
                2.2270  2.2273  2.2275  2.2278  2.2280  2.2283  2.2285
                2.2288  2.2290  2.2293  2.2295  2.2298  2.2300

*S*************************************************************
*** ******************
*S  LOS DIAMONTES SUBDIVISION
*** ******************
*** AREA = 14.1907 ACRES
*** AREA = 618,147 SF
*** ******************
COMPUTE NM HYD        ID=1  HYD NO=100 AREA= 0.022173 SQ MI
                      PER A=0  PER B=23  PER C=23  PER D=54
                      TP=-.1333 HR  MASS RAIN=-1

    K =  0.072649HR    TP =  0.133300HR    K/TP RATIO =  0.545000     SHAPE CONSTANT, N =  7.106428
    UNIT PEAK =   47.272    CFS   UNIT VOLUME =   0.9997       B =   526.28      P60 = 1.9000
    AREA =     0.011973 SQ MI    IA =   0.10000 INCHES    INF =   0.04000 INCHES PER HOUR
    RUNOFF COMPUTED BY INITIAL ABSTRACTION/INFILTRATION NUMBER METHOD - DT =  0.010000


    K =  0.118483HR    TP =  0.133300HR    K/TP RATIO =  0.888844     SHAPE CONSTANT, N =  3.990415
    UNIT PEAK =   27.128    CFS   UNIT VOLUME =   0.9995       B =   354.53      P60 = 1.9000
    AREA =     0.010200 SQ MI    IA =   0.42500 INCHES    INF =   1.04000 INCHES PER HOUR
    RUNOFF COMPUTED BY INITIAL ABSTRACTION/INFILTRATION NUMBER METHOD - DT =  0.010000

PRINT HYD             ID=1 CODE=1

                                   PARTIAL HYDROGRAPH   100.00

    RUNOFF VOLUME =     1.52432 INCHES     =       1.8026 ACRE-FEET
    PEAK DISCHARGE RATE =      54.34 CFS  AT   1.530 HOURS   BASIN AREA =  0.0222 SQ. MI.


*s********************
*s* ROUTE THRU SE POND
*s*********************************************************************
*S* OUTFALL CIRCUMFERENCE = 11 FT.
*S*********************************************************************
ROUTE RESERVOIR       ID=12  HYD=POND.12   INFLOW=1   CODE=100
                      OUTFLOW(CFS)   STORAGE(ACFT)     ELEV(FT)
                      0.00          0.0000          103.00
                      0.01          0.21713         104.35
                      17.29         0.33680         105.00
                      69.94         0.55580         106.00

  *  *  *  *  *  *  *  *  *  *  *  *  *  *  *  *  *

    TIME       INFLOW     ELEV       VOLUME     OUTFLOW
    (HRS)      (CFS)      (FEET)     (AC-FT)    (CFS)

     0.00        0.00    103.00       0.000       0.00
     0.24        0.00    103.00       0.000       0.00
     0.48        0.00    103.00       0.000       0.00
     0.72        0.00    103.00       0.000       0.00
```

| | | | | |
|---|---|---|---|---|
| 0.96 | 0.54 | 103.01 | 0.001 | 0.00 |
| 1.20 | 5.00 | 103.33 | 0.054 | 0.00 |
| 1.44 | 34.60 | 104.76 | 0.292 | 10.85 |
| 1.68 | 30.65 | 105.41 | 0.426 | 38.74 |
| 1.92 | 9.67 | 104.86 | 0.311 | 13.55 |
| 2.16 | 3.72 | 104.56 | 0.255 | 5.53 |
| 2.40 | 1.83 | 104.44 | 0.234 | 2.43 |
| 2.64 | 0.70 | 104.39 | 0.224 | 1.02 |
| 2.88 | 0.35 | 104.37 | 0.220 | 0.47 |
| 3.12 | 0.18 | 104.36 | 0.219 | 0.23 |
| 3.36 | 0.11 | 104.35 | 0.218 | 0.13 |
| 3.60 | 0.08 | 104.35 | 0.218 | 0.09 |
| 3.84 | 0.07 | 104.35 | 0.218 | 0.07 |
| 4.08 | 0.07 | 104.35 | 0.218 | 0.07 |
| 4.32 | 0.08 | 104.35 | 0.218 | 0.07 |
| 4.56 | 0.09 | 104.35 | 0.218 | 0.08 |
| 4.80 | 0.10 | 104.35 | 0.218 | 0.10 |
| 5.04 | 0.11 | 104.35 | 0.218 | 0.11 |
| 5.28 | 0.13 | 104.35 | 0.218 | 0.12 |
| 5.52 | 0.14 | 104.35 | 0.218 | 0.14 |
| 5.76 | 0.16 | 104.36 | 0.218 | 0.15 |
| 6.00 | 0.18 | 104.36 | 0.218 | 0.17 |
| 6.24 | 0.04 | 104.35 | 0.218 | 0.09 |
| 6.48 | 0.01 | 104.35 | 0.217 | 0.02 |
| 6.72 | 0.00 | 104.35 | 0.217 | 0.01 |
| 6.96 | 0.00 | 104.35 | 0.217 | 0.01 |
| 7.20 | 0.00 | 104.35 | 0.217 | 0.01 |
| 7.44 | 0.00 | 104.35 | 0.217 | 0.01 |
| 7.68 | 0.00 | 104.35 | 0.216 | 0.01 |
| 7.92 | 0.00 | 104.34 | 0.216 | 0.01 |
| 8.16 | 0.00 | 104.34 | 0.216 | 0.01 |
| 8.40 | 0.00 | 104.34 | 0.216 | 0.01 |
| 8.64 | 0.00 | 104.34 | 0.216 | 0.01 |
| 8.88 | 0.00 | 104.34 | 0.215 | 0.01 |
| 9.12 | 0.00 | 104.34 | 0.215 | 0.01 |
| 9.36 | 0.00 | 104.34 | 0.215 | 0.01 |
| 9.60 | 0.00 | 104.34 | 0.215 | 0.01 |
| 9.84 | 0.00 | 104.33 | 0.215 | 0.01 |
| 10.08 | 0.00 | 104.33 | 0.214 | 0.01 |
| 10.32 | 0.00 | 104.33 | 0.214 | 0.01 |
| 10.56 | 0.00 | 104.33 | 0.214 | 0.01 |
| 10.80 | 0.00 | 104.33 | 0.214 | 0.01 |
| 11.04 | 0.00 | 104.33 | 0.214 | 0.01 |
| 11.28 | 0.00 | 104.33 | 0.213 | 0.01 |
| 11.52 | 0.00 | 104.33 | 0.213 | 0.01 |
| 11.76 | 0.00 | 104.32 | 0.213 | 0.01 |
| 12.00 | 0.00 | 104.32 | 0.213 | 0.01 |
| 12.24 | 0.00 | 104.32 | 0.213 | 0.01 |
| 12.48 | 0.00 | 104.32 | 0.212 | 0.01 |
| 12.72 | 0.00 | 104.32 | 0.212 | 0.01 |
| 12.96 | 0.00 | 104.32 | 0.212 | 0.01 |
| 13.20 | 0.00 | 104.32 | 0.212 | 0.01 |

| TIME (HRS) | INFLOW (CFS) | ELEV (FEET) | VOLUME (AC-FT) | OUTFLOW (CFS) |
|---|---|---|---|---|

| | | | | |
|---|---|---|---|---|
| 13.44 | 0.00 | 104.32 | 0.212 | 0.01 |
| 13.68 | 0.00 | 104.31 | 0.211 | 0.01 |
| 13.92 | 0.00 | 104.31 | 0.211 | 0.01 |
| 14.16 | 0.00 | 104.31 | 0.211 | 0.01 |
| 14.40 | 0.00 | 104.31 | 0.211 | 0.01 |
| 14.64 | 0.00 | 104.31 | 0.211 | 0.01 |
| 14.88 | 0.00 | 104.31 | 0.210 | 0.01 |
| 15.12 | 0.00 | 104.31 | 0.210 | 0.01 |
| 15.36 | 0.00 | 104.31 | 0.210 | 0.01 |
| 15.60 | 0.00 | 104.31 | 0.210 | 0.01 |
| 15.84 | 0.00 | 104.30 | 0.210 | 0.01 |
| 16.08 | 0.00 | 104.30 | 0.210 | 0.01 |
| 16.32 | 0.00 | 104.30 | 0.209 | 0.01 |
| 16.56 | 0.00 | 104.30 | 0.209 | 0.01 |
| 16.80 | 0.00 | 104.30 | 0.209 | 0.01 |
| 17.04 | 0.00 | 104.30 | 0.209 | 0.01 |
| 17.28 | 0.00 | 104.30 | 0.209 | 0.01 |
| 17.52 | 0.00 | 104.30 | 0.208 | 0.01 |
| 17.76 | 0.00 | 104.29 | 0.208 | 0.01 |
| 18.00 | 0.00 | 104.29 | 0.208 | 0.01 |
| 18.24 | 0.00 | 104.29 | 0.208 | 0.01 |
| 18.48 | 0.00 | 104.29 | 0.208 | 0.01 |
| 18.72 | 0.00 | 104.29 | 0.207 | 0.01 |
| 18.96 | 0.00 | 104.29 | 0.207 | 0.01 |
| 19.20 | 0.00 | 104.29 | 0.207 | 0.01 |
| 19.44 | 0.00 | 104.29 | 0.207 | 0.01 |
| 19.68 | 0.00 | 104.28 | 0.207 | 0.01 |
| 19.92 | 0.00 | 104.28 | 0.206 | 0.01 |
| 20.16 | 0.00 | 104.28 | 0.206 | 0.01 |
| 20.40 | 0.00 | 104.28 | 0.206 | 0.01 |
| 20.64 | 0.00 | 104.28 | 0.206 | 0.01 |
| 20.88 | 0.00 | 104.28 | 0.206 | 0.01 |
| 21.12 | 0.00 | 104.28 | 0.206 | 0.01 |
| 21.36 | 0.00 | 104.28 | 0.205 | 0.01 |
| 21.60 | 0.00 | 104.28 | 0.205 | 0.01 |
| 21.84 | 0.00 | 104.27 | 0.205 | 0.01 |
| 22.08 | 0.00 | 104.27 | 0.205 | 0.01 |
| 22.32 | 0.00 | 104.27 | 0.205 | 0.01 |
| 22.56 | 0.00 | 104.27 | 0.204 | 0.01 |
| 22.80 | 0.00 | 104.27 | 0.204 | 0.01 |
| 23.04 | 0.00 | 104.27 | 0.204 | 0.01 |
| 23.28 | 0.00 | 104.27 | 0.204 | 0.01 |
| 23.52 | 0.00 | 104.27 | 0.204 | 0.01 |
| 23.76 | 0.00 | 104.27 | 0.203 | 0.01 |
| 24.00 | 0.00 | 104.26 | 0.203 | 0.01 |
| 24.24 | 0.00 | 104.26 | 0.203 | 0.01 |
| 24.48 | 0.00 | 104.26 | 0.203 | 0.01 |
| 24.72 | 0.00 | 104.26 | 0.203 | 0.01 |
| 24.96 | 0.00 | 104.26 | 0.203 | 0.01 |
| 25.20 | 0.00 | 104.26 | 0.202 | 0.01 |
| 25.44 | 0.00 | 104.26 | 0.202 | 0.01 |
| 25.68 | 0.00 | 104.26 | 0.202 | 0.01 |
| 25.92 | 0.00 | 104.25 | 0.202 | 0.01 |
| 26.16 | 0.00 | 104.25 | 0.202 | 0.01 |
| 26.40 | 0.00 | 104.25 | 0.201 | 0.01 |
| 26.64 | 0.00 | 104.25 | 0.201 | 0.01 |

| TIME (HRS) | INFLOW (CFS) | ELEV (FEET) | VOLUME (AC-FT) | OUTFLOW (CFS) |
|---|---|---|---|---|
| 26.88 | 0.00 | 104.25 | 0.201 | 0.01 |
| 27.12 | 0.00 | 104.25 | 0.201 | 0.01 |
| 27.36 | 0.00 | 104.25 | 0.201 | 0.01 |
| 27.60 | 0.00 | 104.25 | 0.201 | 0.01 |
| 27.84 | 0.00 | 104.25 | 0.200 | 0.01 |
| 28.08 | 0.00 | 104.24 | 0.200 | 0.01 |
| 28.32 | 0.00 | 104.24 | 0.200 | 0.01 |
| 28.56 | 0.00 | 104.24 | 0.200 | 0.01 |
| 28.80 | 0.00 | 104.24 | 0.200 | 0.01 |
| 29.04 | 0.00 | 104.24 | 0.199 | 0.01 |
| 29.28 | 0.00 | 104.24 | 0.199 | 0.01 |
| 29.52 | 0.00 | 104.24 | 0.199 | 0.01 |
| 29.76 | 0.00 | 104.24 | 0.199 | 0.01 |
| 30.00 | 0.00 | 104.24 | 0.199 | 0.01 |
| 30.24 | 0.00 | 104.23 | 0.199 | 0.01 |
| 30.48 | 0.00 | 104.23 | 0.198 | 0.01 |
| 30.72 | 0.00 | 104.23 | 0.198 | 0.01 |
| 30.96 | 0.00 | 104.23 | 0.198 | 0.01 |
| 31.20 | 0.00 | 104.23 | 0.198 | 0.01 |
| 31.44 | 0.00 | 104.23 | 0.198 | 0.01 |
| 31.68 | 0.00 | 104.23 | 0.197 | 0.01 |
| 31.92 | 0.00 | 104.23 | 0.197 | 0.01 |
| 32.16 | 0.00 | 104.23 | 0.197 | 0.01 |
| 32.40 | 0.00 | 104.22 | 0.197 | 0.01 |
| 32.64 | 0.00 | 104.22 | 0.197 | 0.01 |
| 32.88 | 0.00 | 104.22 | 0.197 | 0.01 |
| 33.12 | 0.00 | 104.22 | 0.196 | 0.01 |
| 33.36 | 0.00 | 104.22 | 0.196 | 0.01 |
| 33.60 | 0.00 | 104.22 | 0.196 | 0.01 |
| 33.84 | 0.00 | 104.22 | 0.196 | 0.01 |
| 34.08 | 0.00 | 104.22 | 0.196 | 0.01 |
| 34.32 | 0.00 | 104.22 | 0.195 | 0.01 |
| 34.56 | 0.00 | 104.21 | 0.195 | 0.01 |
| 34.80 | 0.00 | 104.21 | 0.195 | 0.01 |
| 35.04 | 0.00 | 104.21 | 0.195 | 0.01 |
| 35.28 | 0.00 | 104.21 | 0.195 | 0.01 |
| 35.52 | 0.00 | 104.21 | 0.195 | 0.01 |
| 35.76 | 0.00 | 104.21 | 0.194 | 0.01 |
| 36.00 | 0.00 | 104.21 | 0.194 | 0.01 |
| 36.24 | 0.00 | 104.21 | 0.194 | 0.01 |
| 36.48 | 0.00 | 104.21 | 0.194 | 0.01 |
| 36.72 | 0.00 | 104.20 | 0.194 | 0.01 |
| 36.96 | 0.00 | 104.20 | 0.194 | 0.01 |
| 37.20 | 0.00 | 104.20 | 0.193 | 0.01 |
| 37.44 | 0.00 | 104.20 | 0.193 | 0.01 |
| 37.68 | 0.00 | 104.20 | 0.193 | 0.01 |
| 37.92 | 0.00 | 104.20 | 0.193 | 0.01 |
| 38.16 | 0.00 | 104.20 | 0.193 | 0.01 |
| 38.40 | 0.00 | 104.20 | 0.192 | 0.01 |
| 38.64 | 0.00 | 104.20 | 0.192 | 0.01 |
| 38.88 | 0.00 | 104.19 | 0.192 | 0.01 |
| 39.12 | 0.00 | 104.19 | 0.192 | 0.01 |

```
    39.36        0.00     104.19       0.192       0.01
    39.60        0.00     104.19       0.192       0.01
    39.84        0.00     104.19       0.191       0.01
 PEAK DISCHARGE =        48.743 CFS - PEAK OCCURS AT HOUR    1.58
 MAXIMUM WATER SURFACE ELEVATION =       105.597
 MAXIMUM STORAGE =         0.4676 AC-FT       INCREMENTAL TIME=    0.010000HRS

PRINT HYD            ID=12 CODE=1

                                        HYDROGRAPH FROM AREA POND.12


    RUNOFF VOLUME =      1.36254 INCHES      =        1.6113 ACRE-FEET
    PEAK DISCHARGE RATE =       48.74 CFS  AT   1.580 HOURS   BASIN AREA =  0.0222 SQ. MI.

FINISH
    NORMAL PROGRAM FINISH          END TIME (HR:MIN:SEC) = 16:31:59
```

```
AHYMO PROGRAM (AHYMO-S4)                    - Version: S4.01a - Rel: 01a
     RUN DATE (MON/DAY/YR) = 06/05/2015
     START TIME (HR:MIN:SEC) = 09:34:03     USER NO.= M-GoodwinNMSiteA90075759
     INPUT FILE = C:\Program Files (x86)\AHYMO-S4\LASDIA_1.DAT

*S*************************************************************
*S
*S                    Los DIAMONTES
*S                    100 YEAR 6 HOUR STORM EVENT
*S
*S                    FILE: LASDIA_1.DAT
*S                    LAST REVISED: 6-5-15
*S                    NOAA ATLAS 2, VOL IV ZONE N 9
START                 TIME=0.0 HR PUNCH CODE=0 PRINT LINES=-6
LOCATION              ALBUQUERQUE
     City of Albuquerque soil infiltration values (LAND FACTORS) used for computations.
     Land Treatment     Initial Abstr.(in)    Unif. Infilt.(in/hour)
          A             0.65                  1.67
          B             0.50                  1.25
          C             0.35                  0.83
          D             0.10                  0.04

RAINFALL              TYPE=1 RAIN QUARTER=0.0
                      RAIN ONE=1.90 IN RAIN SIX=2.23 IN
                      RAIN DAY=2.70 IN DT=0.01 HRS

6-HOUR RAINFALL DIST. - BASED ON NOAA ATLAS 14 FOR CONVECTIVE AREAS (NM & AZ) - D1
DT =    0.010000 HOURS        END TIME =     6.000000 HOURS
  0.0000  0.0004  0.0009  0.0013  0.0018  0.0022  0.0026
  0.0031  0.0035  0.0040  0.0045  0.0050  0.0055  0.0059
  0.0064  0.0069  0.0074  0.0079  0.0085  0.0090  0.0096
  0.0101  0.0107  0.0112  0.0118  0.0123  0.0129  0.0136
  0.0142  0.0148  0.0154  0.0160  0.0167  0.0173  0.0184
  0.0197  0.0211  0.0224  0.0237  0.0251  0.0264  0.0277
  0.0291  0.0306  0.0321  0.0336  0.0351  0.0367  0.0382
  0.0397  0.0412  0.0428  0.0445  0.0461  0.0477  0.0494
  0.0510  0.0527  0.0543  0.0560  0.0577  0.0595  0.0612
  0.0629  0.0647  0.0664  0.0681  0.0699  0.0717  0.0735
  0.0753  0.0771  0.0790  0.0808  0.0826  0.0844  0.0864
  0.0885  0.0905  0.0926  0.0946  0.0966  0.0987  0.1007
  0.1029  0.1052  0.1076  0.1099  0.1122  0.1145  0.1168
  0.1191  0.1225  0.1280  0.1335  0.1390  0.1445  0.1500
  0.1555  0.1610  0.1665  0.1738  0.1812  0.1886  0.1959
  0.2033  0.2107  0.2180  0.2254  0.2347  0.2450  0.2553
  0.2656  0.2759  0.2862  0.2965  0.3068  0.3189  0.3343
  0.3498  0.3653  0.3807  0.3962  0.4117  0.4271  0.4426
  0.4693  0.4960  0.5227  0.5494  0.5761  0.6029  0.6296
  0.6563  0.7126  0.7837  0.8549  0.9260  0.9972  1.0683
  1.1395  1.2106  1.2712  1.3106  1.3501  1.3895  1.4289
```

| | | | | | | |
|---|---|---|---|---|---|---|
| 1.4684 | 1.5078 | 1.5472 | 1.5867 | 1.6065 | 1.6263 | 1.6461 |
| 1.6659 | 1.6858 | 1.7056 | 1.7254 | 1.7452 | 1.7601 | 1.7726 |
| 1.7851 | 1.7976 | 1.8101 | 1.8225 | 1.8350 | 1.8475 | 1.8587 |
| 1.8674 | 1.8760 | 1.8847 | 1.8933 | 1.9020 | 1.9106 | 1.9193 |
| 1.9279 | 1.9343 | 1.9406 | 1.9469 | 1.9533 | 1.9596 | 1.9659 |
| 1.9723 | 1.9786 | 1.9839 | 1.9887 | 1.9935 | 1.9983 | 2.0031 |
| 2.0079 | 2.0127 | 2.0175 | 2.0214 | 2.0236 | 2.0257 | 2.0279 |
| 2.0301 | 2.0322 | 2.0344 | 2.0366 | 2.0387 | 2.0407 | 2.0426 |
| 2.0445 | 2.0464 | 2.0483 | 2.0503 | 2.0522 | 2.0541 | 2.0558 |
| 2.0574 | 2.0589 | 2.0605 | 2.0621 | 2.0637 | 2.0652 | 2.0668 |
| 2.0683 | 2.0698 | 2.0712 | 2.0726 | 2.0741 | 2.0755 | 2.0770 |
| 2.0784 | 2.0799 | 2.0812 | 2.0826 | 2.0840 | 2.0854 | 2.0868 |
| 2.0882 | 2.0896 | 2.0910 | 2.0919 | 2.0925 | 2.0932 | 2.0939 |
| 2.0946 | 2.0952 | 2.0959 | 2.0966 | 2.0972 | 2.0979 | 2.0985 |
| 2.0992 | 2.0998 | 2.1005 | 2.1011 | 2.1018 | 2.1024 | 2.1030 |
| 2.1036 | 2.1042 | 2.1048 | 2.1054 | 2.1060 | 2.1066 | 2.1072 |
| 2.1078 | 2.1084 | 2.1090 | 2.1096 | 2.1102 | 2.1107 | 2.1113 |
| 2.1119 | 2.1125 | 2.1131 | 2.1136 | 2.1142 | 2.1147 | 2.1153 |
| 2.1159 | 2.1164 | 2.1170 | 2.1175 | 2.1181 | 2.1186 | 2.1191 |
| 2.1197 | 2.1202 | 2.1207 | 2.1213 | 2.1218 | 2.1223 | 2.1228 |
| 2.1233 | 2.1238 | 2.1244 | 2.1249 | 2.1254 | 2.1259 | 2.1264 |
| 2.1269 | 2.1274 | 2.1279 | 2.1284 | 2.1289 | 2.1294 | 2.1299 |
| 2.1304 | 2.1309 | 2.1313 | 2.1318 | 2.1323 | 2.1328 | 2.1332 |
| 2.1337 | 2.1342 | 2.1346 | 2.1351 | 2.1356 | 2.1360 | 2.1365 |
| 2.1370 | 2.1374 | 2.1379 | 2.1383 | 2.1388 | 2.1392 | 2.1397 |
| 2.1401 | 2.1406 | 2.1410 | 2.1415 | 2.1419 | 2.1424 | 2.1428 |
| 2.1432 | 2.1436 | 2.1441 | 2.1445 | 2.1449 | 2.1454 | 2.1458 |
| 2.1462 | 2.1466 | 2.1470 | 2.1475 | 2.1479 | 2.1483 | 2.1487 |
| 2.1491 | 2.1495 | 2.1500 | 2.1504 | 2.1508 | 2.1512 | 2.1516 |
| 2.1520 | 2.1524 | 2.1528 | 2.1532 | 2.1536 | 2.1540 | 2.1544 |
| 2.1548 | 2.1552 | 2.1556 | 2.1560 | 2.1564 | 2.1568 | 2.1572 |
| 2.1576 | 2.1580 | 2.1584 | 2.1588 | 2.1591 | 2.1595 | 2.1599 |
| 2.1603 | 2.1607 | 2.1611 | 2.1614 | 2.1618 | 2.1622 | 2.1626 |
| 2.1630 | 2.1633 | 2.1637 | 2.1641 | 2.1645 | 2.1648 | 2.1652 |
| 2.1656 | 2.1660 | 2.1663 | 2.1667 | 2.1671 | 2.1674 | 2.1678 |
| 2.1682 | 2.1685 | 2.1689 | 2.1693 | 2.1696 | 2.1700 | 2.1703 |
| 2.1707 | 2.1711 | 2.1714 | 2.1718 | 2.1721 | 2.1725 | 2.1728 |
| 2.1732 | 2.1736 | 2.1739 | 2.1743 | 2.1746 | 2.1750 | 2.1753 |
| 2.1757 | 2.1760 | 2.1763 | 2.1767 | 2.1770 | 2.1774 | 2.1777 |
| 2.1781 | 2.1784 | 2.1788 | 2.1791 | 2.1794 | 2.1798 | 2.1801 |
| 2.1805 | 2.1808 | 2.1811 | 2.1815 | 2.1818 | 2.1821 | 2.1825 |
| 2.1828 | 2.1831 | 2.1835 | 2.1838 | 2.1841 | 2.1844 | 2.1848 |
| 2.1851 | 2.1854 | 2.1858 | 2.1861 | 2.1864 | 2.1867 | 2.1871 |
| 2.1874 | 2.1877 | 2.1880 | 2.1883 | 2.1887 | 2.1890 | 2.1893 |
| 2.1896 | 2.1899 | 2.1903 | 2.1906 | 2.1909 | 2.1912 | 2.1915 |
| 2.1918 | 2.1921 | 2.1925 | 2.1928 | 2.1931 | 2.1934 | 2.1937 |
| 2.1940 | 2.1943 | 2.1946 | 2.1949 | 2.1952 | 2.1955 | 2.1959 |
| 2.1962 | 2.1965 | 2.1968 | 2.1971 | 2.1974 | 2.1977 | 2.1980 |
| 2.1983 | 2.1986 | 2.1989 | 2.1992 | 2.1995 | 2.1998 | 2.2001 |
| 2.2004 | 2.2007 | 2.2010 | 2.2013 | 2.2015 | 2.2018 | 2.2021 |
| 2.2024 | 2.2027 | 2.2030 | 2.2033 | 2.2036 | 2.2039 | 2.2042 |

```
2.2045  2.2047  2.2050  2.2053  2.2056  2.2059  2.2062
2.2065  2.2068  2.2070  2.2073  2.2076  2.2079  2.2082
2.2085  2.2087  2.2090  2.2093  2.2096  2.2099  2.2101
2.2104  2.2107  2.2110  2.2112  2.2115  2.2118  2.2121
2.2123  2.2126  2.2129  2.2132  2.2134  2.2137  2.2140
2.2143  2.2145  2.2148  2.2151  2.2153  2.2156  2.2159
2.2161  2.2164  2.2167  2.2170  2.2172  2.2175  2.2177
2.2180  2.2183  2.2185  2.2188  2.2191  2.2193  2.2196
2.2199  2.2201  2.2204  2.2206  2.2209  2.2212  2.2214
2.2217  2.2219  2.2222  2.2225  2.2227  2.2230  2.2232
2.2235  2.2237  2.2240  2.2242  2.2245  2.2248  2.2250
2.2253  2.2255  2.2258  2.2260  2.2263  2.2265  2.2268
2.2270  2.2273  2.2275  2.2278  2.2280  2.2283  2.2285
2.2288  2.2290  2.2293  2.2295  2.2298  2.2300

*S*************************************************************
*** *******************
*S  LOS DIAMONTES Tract A (UNDEVELOPED)
*** *******************
*** AREA = 5.6729 ACRES
*** AREA = 247,111 SF
*** *******************
COMPUTE NM HYD       ID=1  HYD NO=100 AREA= 0.008864 SQ MI
                     PER A=100  PER B=0  PER C=0  PER D=0
                     TP=-.1333 HR  MASS RAIN=-1

     K =  0.162928HR    TP =  0.133300HR    K/TP RATIO =  1.222262     SHAPE CONSTANT, N =  2.911823
     UNIT PEAK =   18.257    CFS   UNIT VOLUME =   0.9992       B =   274.56      P60 = 1.9000
     AREA =     0.008864 SQ MI    IA =   0.65000 INCHES    INF =   1.67000 INCHES PER HOUR
     RUNOFF COMPUTED BY INITIAL ABSTRACTION/INFILTRATION NUMBER METHOD - DT =  0.010000

PRINT HYD            ID=1 CODE=1

                                  PARTIAL HYDROGRAPH   100.00


    RUNOFF VOLUME =     0.67376 INCHES     =       0.3185 ACRE-FEET
    PEAK DISCHARGE RATE =      10.60 CFS  AT   1.540 HOURS   BASIN AREA =  0.0089 SQ. MI.


FINISH

    NORMAL PROGRAM FINISH          END TIME (HR:MIN:SEC) = 09:34:03
```

# Appendix B

Summary of Street Capacity Calculations

Street Capacity Exhibit / Sub basin Boundaries

HEC-2 Printouts

# Los Diamantes Subdivision

| Summary of Street Capacity Calculations | | | | | | | | | |
|---|---|---|---|---|---|---|---|---|---|
| LOCATION | WIDTH | CROWN | STD or MTB | SLOPE % | Q cfs | DEPTH ft. | EG (ft) | INLET Q cfs | TYPE INLET |
| SORRAL WAY | 26 | Y | MTB | 1.66 | 11.92 | 0.36 | 0.50 | n/a | |
| DEL TIMBRE LANE | 26 | Y | MTB | 2.47 | 11.88 | 0.34 | 0.52 | n/a | |
| | | | | | | | | | |
| DEL TIMBRE LANE | 28 | Y | STD | 4.00 | 26.85 | 0.39 | 0.85 | | |
| SORRAL WAY | 28 | Y | STD | 4.00 | 25.73 | 0.39 | 0.83 | | |
| | | | | | | | | | |
| DEL TIMBRE LANE | 28 | Y | STD | 1.00 | 26.85 | 0.49 | 0.68 | 26.85 | Sump Inlet |
| SORRAL WAY | 28 | Y | STD | 1.00 | 25.73 | 0.48 | 0.67 | 25.73 | Sump Inlet |
| | | | | | | | | | |
| | | | | | | | | | |

(DLH 6-5-15)

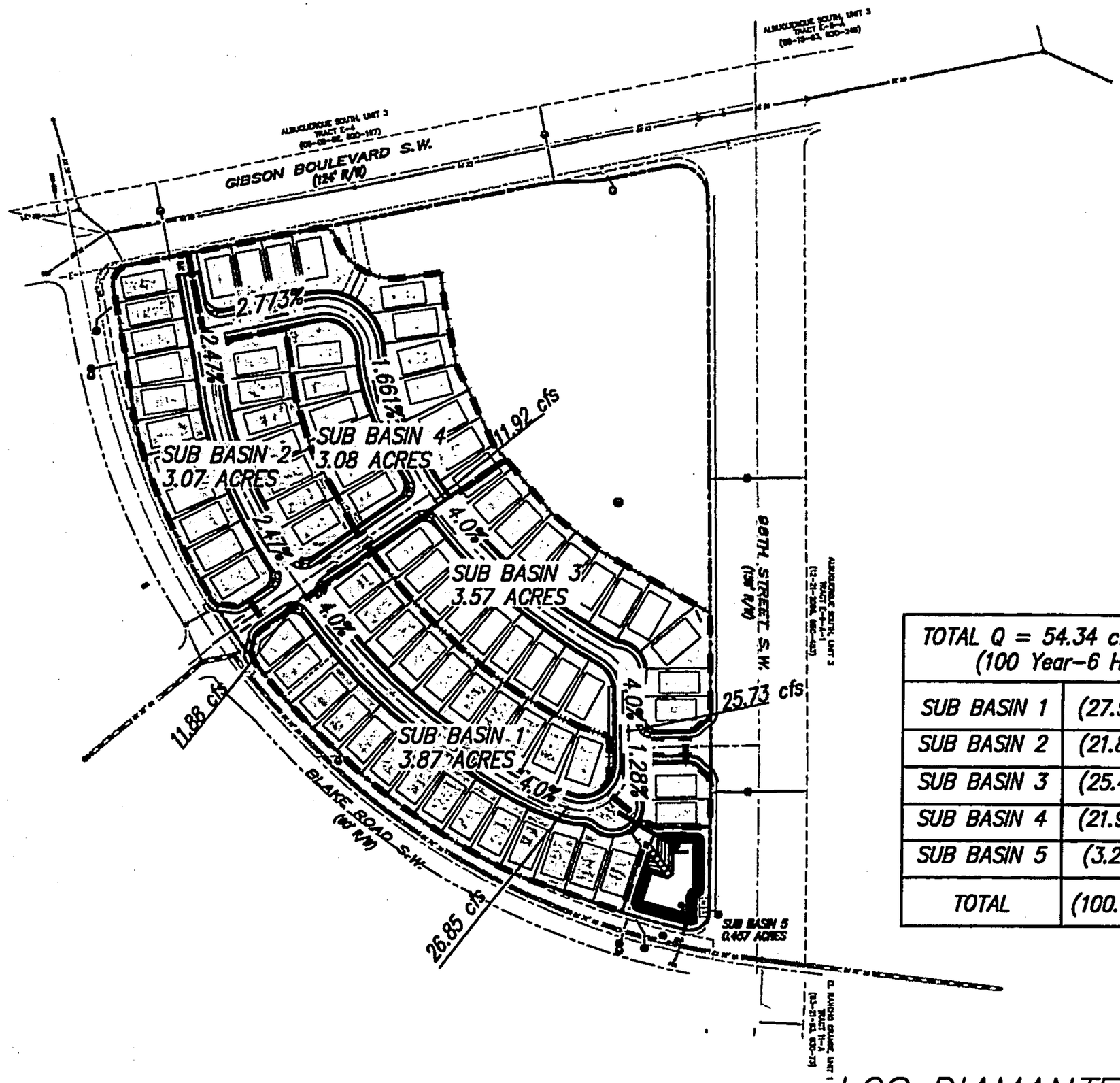


| TOTAL Q = 54.34 cfs (from AHYMO results) (100 Year–6 Hour storm event) | | |
|---|---|---|
| SUB BASIN 1 | (27.55%) | 14.97 cfs |
| SUB BASIN 2 | (21.86%) | 11.88 cfs |
| SUB BASIN 3 | (25.41%) | 13.81 cfs |
| SUB BASIN 4 | (21.93%) | 11.92 cfs |
| SUB BASIN 5 | (3.25%) | 1.76 cfs |
| TOTAL | (100.00%) | 54.34 cfs |

# LOS DIAMANTES SUBDIVISION STREET CAPACITY EXHIBIT

(Mark Goodwin & Associates, DLH 6–5–15)

```
1*******************************************                                    ****************************************
 *  HEC-2 WATER SURFACE PROFILES            *                                    *  U.S. ARMY CORPS OF ENGINEERS        *
 *                                          *                                    *  HYDROLOGIC ENGINEERING CENTER       *
 *  Version   4.6.2;  May 1991              *                                    *  609 SECOND STREET, SUITE D          *
 *                                          *                                    *  DAVIS, CALIFORNIA 95616-4687        *
 *  RUN DATE    04JUN15    TIME   09:52:05  *                                    *          (916) 756-1104              *
 *******************************************                                    ****************************************

                                          X     X  XXXXXXX   XXXXX              XXXXX
                                          X     X  X        X     X            X     X
                                          X     X  X        X                        X
                                          XXXXXXX  XXXX     X         XXXXX    XXXXX
                                          X     X  X        X                X
                                          X     X  X        X     X          X
THIS RUN EXECUTED 04JUN15    09:52:05
 ************************************
  HEC-2 WATER SURFACE PROFILES
  Version   4.6.2;  May 1991
 ************************************

 T1          LOS DIAMANTES - STREET CAPACITY CALCULATIONS
 T2          47'ROW 26'F-F MTB CURB AND GUTTER WITH CROWN
 T3          6-5-15

 J1  ICHECK    INQ       NINV      IDIR      STRT      METRIC    HVINS     Q         WSEL      FQ

       0         2         0         1    .01661         0         0         0         0         0

 J3  VARIABLE CODES FOR SUMMARY PRINTOUT

      38        43         1         2        26         4        68         3

 NC     .017      .017      .017        .1        .3
 QT        2     11.92     11.88
 X1        1         9         0        47         0         0         0         0         0         0
 GR      .53         0       .33      9.87         0     11.47      .125      12.5      .345      23.5
 GR     .125      34.5         0     35.53       .33     37.13       .53        47

    SECNO     DEPTH     CWSEL     CRIWS     WSELK     EG        HV        HL        OLOSS     L-BANK ELEV
    Q         QLOB      QCH       QROB      ALOB      ACH       AROB      VOL       TWA       R-BANK ELEV
    TIME      VLOB      VCH       VROB      XNL       XNCH      XNR       WTN       ELMIN     SSTA
    SLOPE     XLOBL     XLCH      XLOBR     ITRIAL    IDC       ICONT     CORAR     TOPWID    ENDST

 *PROF 1

 CCHV=     .100 CEHV=     .300
 *SECNO 1.000
 2096 WSEL NOT GIVEN, AVG OF MAX, MIN USED
      1.000      .36       .36       .40       .00       .50       .14       .00       .00       .53
       11.9       .0      11.9        .0        .0       4.0        .0        .0        .0       .53
        .00      .00      2.96       .00      .000      .017      .000      .000       .00      8.39
    .016866       0.        0.        0.         0        14         7       .00     30.22     38.61

 T1
```

```
T2
T3 26' FF

J1  ICHECK    INQ       NINV      IDIR      STRT      METRIC    HVINS     Q         WSEL      FQ

      0         3         0         1      .0247

J2  NPROF     IPLOT     PRFVS     XSECV     XSECH     FN        ALLDC     IBW       CHNIM     ITRACE

     2         0        -1         0         0         0         0         0         0         0

    SECNO     DEPTH     CWSEL     CRIWS     WSELK     EG        HV        HL        OLOSS     L-BANK ELEV
    Q         QLOB      QCH       QROB      ALOB      ACH       AROB      VOL       TWA       R-BANK ELEV
    TIME      VLOB      VCH       VROB      XNL       XNCH      XNR       WTN       ELMIN     SSTA
    SLOPE     XLOBL     XLCH      XLOBR     ITRIAL    IDC       ICONT     CORAR     TOPWID    ENDST

*PROF 2

CCHV=     .100 CEHV=     .300
*SECNO 1.000
2096 WSEL NOT GIVEN, AVG OF MAX, MIN USED

3265 DIVIDED FLOW

     1.000       .34       .34       .40       .00       .52       .18       .00       .00       .53
      11.9        .0     11.9        .0        .0      3.5        .0        .0        .0       .53
       .00       .00      3.44       .00      .000      .017      .000      .000       .00      9.37
   .025116        0.        0.        0.         0        14         7       .00     27.77     37.63

THIS RUN EXECUTED 04JUN15    09:52:05
 ************************************
  HEC-2 WATER SURFACE PROFILES
  Version   4.6.2;  May 1991
 ************************************

 NOTE- ASTERISK (*) AT LEFT OF CROSS-SECTION NUMBER INDICATES MESSAGE IN SUMMARY OF ERRORS LIST

     6-5-15

 SUMMARY PRINTOUT


      SECNO       Q       CWSEL     CRIWS      VCH     TOPWID     FRCH       EG

      1.000     11.92       .36       .40      2.96     30.22      1.43       .50
      1.000     11.88       .34       .40      3.44     27.77      1.74       .52
  SUMMARY OF ERRORS AND SPECIAL NOTES
```

```
1*******************************************                                    ****************************************
 *  HEC-2 WATER SURFACE PROFILES            *                                    *  U.S. ARMY CORPS OF ENGINEERS        *
 *                                          *                                    *  HYDROLOGIC ENGINEERING CENTER       *
 *  Version   4.6.2;  May 1991              *                                    *  609 SECOND STREET, SUITE D          *
 *                                          *                                    *  DAVIS, CALIFORNIA 95616-4687        *
 *  RUN DATE    04JUN15    TIME   09:52:34  *                                    *          (916) 756-1104              *
 *******************************************                                    ****************************************

                                          X     X  XXXXXXX   XXXXX              XXXXX
                                          X     X  X        X     X            X     X
                                          X     X  X        X                        X
                                          XXXXXXX  XXXX     X          XXXXX   XXXXX
                                          X     X  X        X                  X
                                          X     X  X        X     X            X
THIS RUN EXECUTED 04JUN15    09:52:34
 *************************************
  HEC-2 WATER SURFACE PROFILES
  Version   4.6.2;  May 1991
 *************************************

 T1          LOS DIAMANTES - STREET CAPACITY CALCULATIONS
 T2          49'ROW 28'F-F STD CURB AND GUTTER WITH CROWN
 T3

 J1  ICHECK    INQ       NINV      IDIR      STRT      METRIC    HVINS     Q         WSEL      FQ
       0        2         0         1      .040         0         0         0         0         0

 J3  VARIABLE CODES FOR SUMMARY PRINTOUT

      38        43         1         2        26         4        68         3

 NC     .017      .017      .017       .1        .3
 QT        2     26.85     25.73
 X1        1         9         0       49         0         0         0         0         0         0
 GR      .87         0       .67    10.33         0      10.5      .125      12.5      .365      24.5
 GR     .125      36.5         0     38.5       .67     38.67       .87        49

     SECNO     DEPTH     CWSEL     CRIWS     WSELK     EG        HV        HL        OLOSS     L-BANK ELEV
     Q         QLOB      QCH       QROB      ALOB      ACH       AROB      VOL       TWA       R-BANK ELEV
     TIME      VLOB      VCH       VROB      XNL       XNCH      XNR       WTN       ELMIN     SSTA
     SLOPE     XLOBL     XLCH      XLOBR     ITRIAL    IDC       ICONT     CORAR     TOPWID    ENDST

 *PROF 1

 CCHV=     .100 CEHV=     .300
 *SECNO 1.000
 2096 WSEL NOT GIVEN, AVG OF MAX, MIN USED
      1.000      .39       .39       .52       .00       .85       .45       .00       .00       .87
       26.9       .0      26.8        .0        .0       5.0        .0        .0        .0       .87
```

```
      .00       .00      5.40       .00      .000      .017      .000      .000       .00     10.40
   .039821        0.        0.        0.         0        11         5       .00     28.20     38.60

T1
T2
T3 28' FF

J1  ICHECK    INQ       NINV      IDIR      STRT      METRIC    HVINS     Q         WSEL      FQ

     0         3         0         1       .040

J2  NPROF     IPLOT     PRFVS     XSECV     XSECH     FN        ALLDC     IBW       CHNIM     ITRACE

    2         0        -1         0         0         0         0         0         0         0

    SECNO     DEPTH     CWSEL     CRIWS     WSELK     EG        HV        HL        OLOSS     L-BANK ELEV
    Q         QLOB      QCH       QROB      ALOB      ACH       AROB      VOL       TWA       R-BANK ELEV
    TIME      VLOB      VCH       VROB      XNL       XNCH      XNR       WTN       ELMIN     SSTA
    SLOPE     XLOBL     XLCH      XLOBR     ITRIAL    IDC       ICONT     CORAR     TOPWID    ENDST

*PROF 2

CCHV=     .100 CEHV=     .300
*SECNO 1.000
2096 WSEL NOT GIVEN, AVG OF MAX, MIN USED
    1.000       .39       .39       .51       .00       .83       .44       .00       .00       .87
     25.7        .0      25.7        .0        .0       4.8        .0        .0        .0       .87
      .00       .00      5.31       .00      .000      .017      .000      .000       .00     10.40
   .039762        0.        0.        0.         0        11         5       .00     28.20     38.60

THIS RUN EXECUTED 04JUN15    09:52:34
 ************************************
  HEC-2 WATER SURFACE PROFILES
  Version   4.6.2;  May 1991
 ************************************

 NOTE- ASTERISK (*) AT LEFT OF CROSS-SECTION NUMBER INDICATES MESSAGE IN SUMMARY OF ERRORS LIST

 SUMMARY PRINTOUT

      SECNO       Q       CWSEL     CRIWS      VCH     TOPWID     FRCH       EG

      1.000     26.85       .39       .52      5.40     28.20      2.27       .85
      1.000     25.73       .39       .51      5.31     28.20      2.26       .83

  SUMMARY OF ERRORS AND SPECIAL NOTES
```

```
1*********************************************
 *  HEC-2 WATER SURFACE PROFILES             *
 *                                           *
 *  Version   4.6.2;  May 1991               *
 *                                           *
 *  RUN DATE    04JUN15    TIME   09:53:20   *
 *********************************************
```

```
****************************************
*  U.S. ARMY CORPS OF ENGINEERS        *
*  HYDROLOGIC ENGINEERING CENTER       *
*  609 SECOND STREET, SUITE D          *
*  DAVIS, CALIFORNIA 95616-4687        *
*          (916) 756-1104              *
****************************************
```

```
X     X  XXXXXXX   XXXXX              XXXXX
X     X  X        X     X            X     X
X     X  X        X                        X
XXXXXXX  XXXX     X          XXXXX    XXXXX
X     X  X        X                  X
X     X  X        X     X            X
X     X  XXXXXXX   XXXXX             XXXXXXX
```

THIS RUN EXECUTED 04JUN15  09:53:20

```
*************************************
 HEC-2 WATER SURFACE PROFILES
 Version   4.6.2;  May 1991
*************************************
```

```
T1          LOS DIAMANTES - STREET CAPACITY CALCULATIONS
T2          49'ROW 28'F-F STD CURB AND GUTTER WITH CROWN
T3

J1  ICHECK    INQ       NINV      IDIR      STRT      METRIC    HVINS     Q         WSEL      FQ

       0         2         0         1      .010         0         0         0         0         0

J3  VARIABLE CODES FOR SUMMARY PRINTOUT

     38        43         1         2        26         4        68         3

NC     .017      .017      .017       .1       .3
QT        2     26.85     25.73
X1        1         9         0        49        0         0         0         0         0         0
GR      .87         0       .67     10.33        0      10.5      .125      12.5      .365      24.5
GR     .125      36.5         0      38.5      .67     38.67       .87        49

    SECNO     DEPTH     CWSEL     CRIWS     WSELK     EG        HV        HL        OLOSS     L-BANK ELEV
    Q         QLOB      QCH       QROB      ALOB      ACH       AROB      VOL       TWA       R-BANK ELEV
    TIME      VLOB      VCH       VROB      XNL       XNCH      XNR       WTN       ELMIN     SSTA
    SLOPE     XLOBL     XLCH      XLOBR     ITRIAL    IDC       ICONT     CORAR     TOPWID    ENDST

*PROF 1

CCHV=     .100 CEHV=     .300
*SECNO 1.000
2096 WSEL NOT GIVEN, AVG OF MAX, MIN USED
```

```
     1.000       .49       .49       .52       .00       .68       .19       .00       .00       .87
      26.9        .0      26.8        .0        .0       7.6        .0        .0        .0       .87
       .00       .00      3.54       .00      .000      .017      .000      .000       .00     10.38
   .009814        0.        0.        0.         0        11         5       .00     28.25     38.62

T1
T2
T3 28' FF

J1  ICHECK    INQ       NINV      IDIR      STRT      METRIC    HVINS     Q         WSEL      FQ

      0         3         0         1       .010

J2  NPROF     IPLOT     PRFVS     XSECV     XSECH     FN        ALLDC     IBW       CHNIM     ITRACE

     2         0        -1         0         0         0         0         0         0         0

    SECNO     DEPTH     CWSEL     CRIWS     WSELK     EG        HV        HL        OLOSS     L-BANK ELEV
    Q         QLOB      QCH       QROB      ALOB      ACH       AROB      VOL       TWA       R-BANK ELEV
    TIME      VLOB      VCH       VROB      XNL       XNCH      XNR       WTN       ELMIN     SSTA
    SLOPE     XLOBL     XLCH      XLOBR     ITRIAL    IDC       ICONT     CORAR     TOPWID    ENDST

*PROF 2

CCHV=      .100 CEHV=      .300
*SECNO 1.000
2096 WSEL NOT GIVEN, AVG OF MAX, MIN USED
     1.000       .48       .48       .51       .00       .67       .19       .00       .00       .87
      25.7        .0      25.7        .0        .0       7.4        .0        .0        .0       .87
       .00       .00      3.48       .00      .000      .017      .000      .000       .00     10.38
   .009853        0.        0.        0.         0        11         5       .00     28.24     38.62
 THIS RUN EXECUTED 04JUN15    09:53:20
*************************************
 HEC-2 WATER SURFACE PROFILES
 Version   4.6.2;  May 1991
*************************************

 NOTE- ASTERISK (*) AT LEFT OF CROSS-SECTION NUMBER INDICATES MESSAGE IN SUMMARY OF ERRORS LIST

SUMMARY PRINTOUT

      SECNO       Q       CWSEL     CRIWS      VCH     TOPWID     FRCH       EG

      1.000     26.85       .49       .52      3.54     28.25      1.20       .68
      1.000     25.73       .48       .51      3.48     28.24      1.20       .67

 SUMMARY OF ERRORS AND SPECIAL NOTES
```

# Appendix C

Pond Outfall Design Detail

Gold Dust Way Inlet Design Detail

Standard Grate Detail for Inlet

dmg
D. Mark Goodwin & Associates, P.A.
Consulting Engineers
P.O. BOX 90606, ALBUQUERQUE, NM 87199
(505) 828-2200 FAX 797-9539

PROJECT Los Diamantes
SUBJECT INLET TO POND
BY DLH DATE 6-24-15
CHECKED ____ DATE ____
SHEET ____ OF ____

INLET GOOD DUST WAY CULDESAC TO POND

GRATE INLET DESIGN $Q = 54.34$ cfs

$54.34 \text{ cfs} = 3(L)(.5)^{3/2} = \quad L = 51.23$

USE $L = 24' \times 2 = 48'$ (BOTH SIDES)

$54.34 \text{ cfs} = 3(48)(H)^{3/2} \quad H = 0.52'$

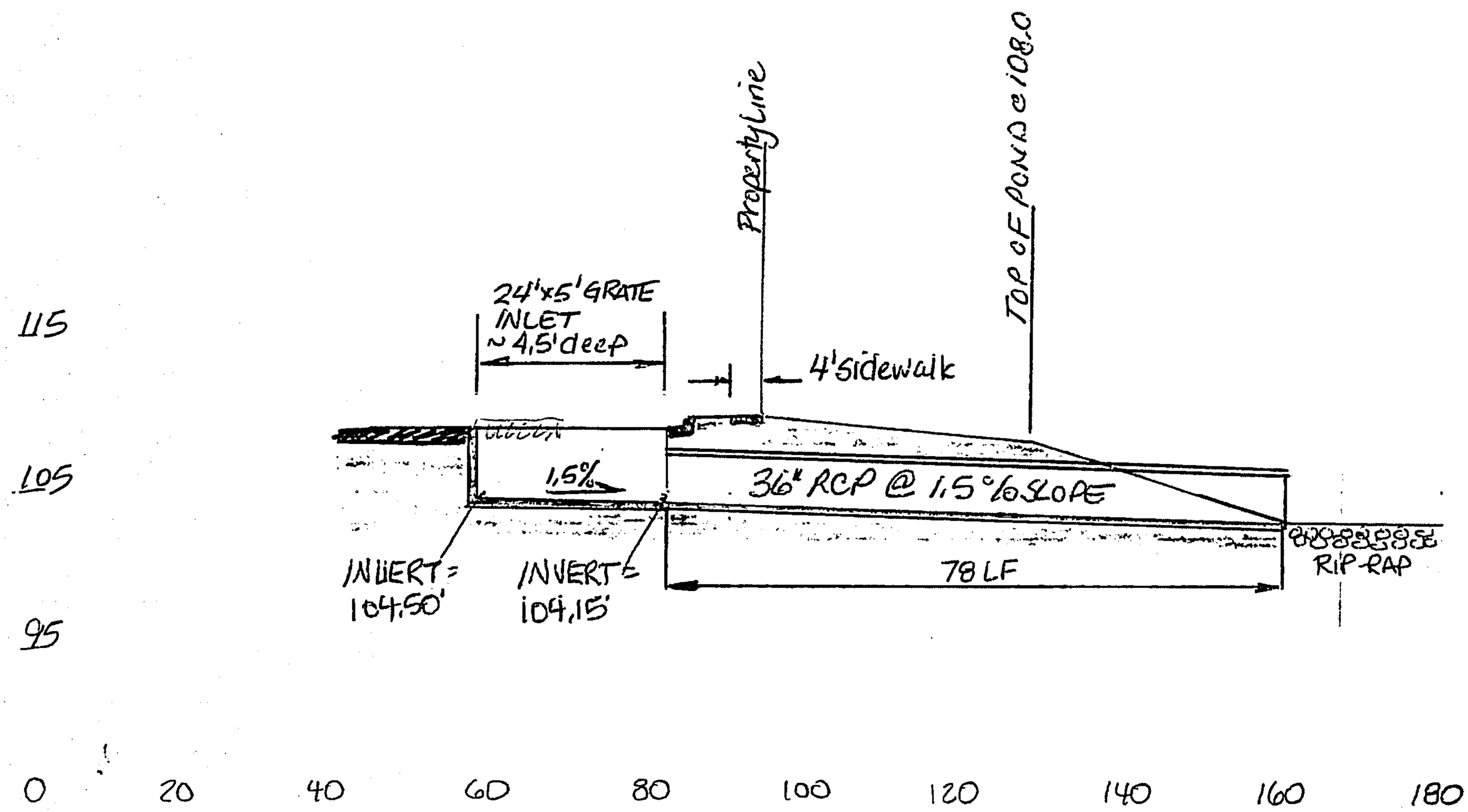

D. Mark Goodwin & Associates, P.A.
Consulting Engineers
P.O. BOX 90606, ALBUQUERQUE, NM 87199
(505) 828-2200 FAX 797-9539

PROJECT Los Diamantes
SUBJECT Outfall to Blake Rd SD
BY DLH DATE 6-4-15
CHECKED ____ DATE ____
SHEET ____ OF ____

OUTFALL TO BLAKE ROAD STORM DRAIN 30" STUB

USE A 3.5' DIA. WEIR FOR OUTFALL ON A STD 4' DIA MANHOLE

$L = 2\pi R = 2\pi(1.75) = 11.0$

CALCULATE H: $50 = 3(11)(H)^{3/2}$ H = 1.32' calculated.

AHYMO calculated H = 1.25'

104.35 + 1.25 = 105.6 (AHYMO results)
104.35 + 1.32 = 105.67 (Weir equ. calcs) } BOTH WORK

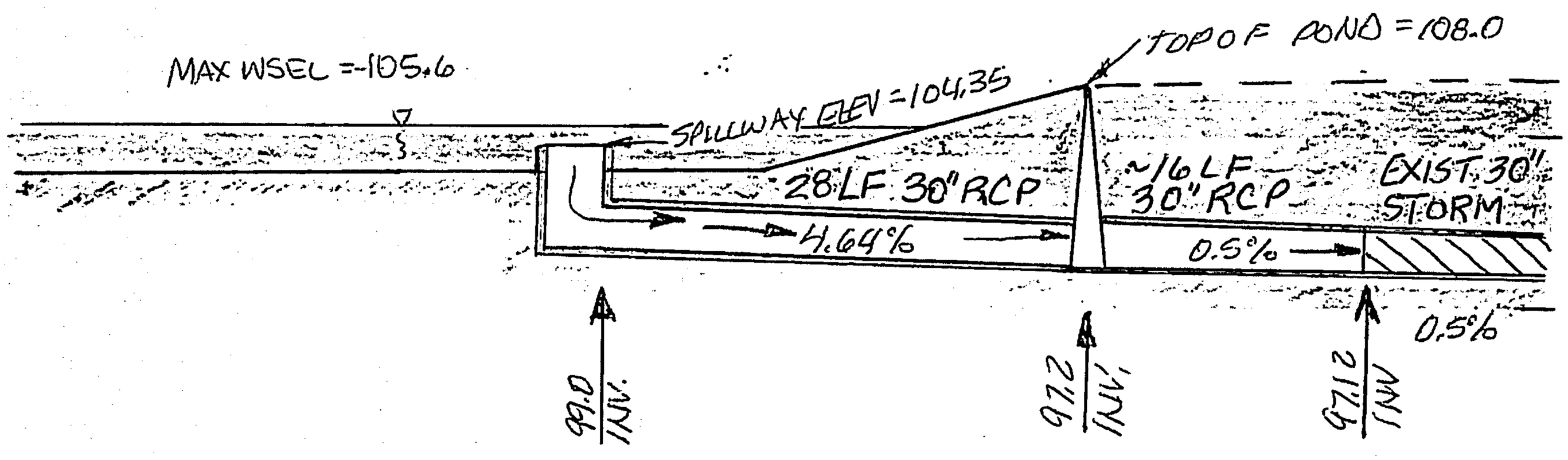

D. Mark Goodwin & Associates, P.A.
Consulting Engineers
P.O. BOX 90606, ALBUQUERQUE, NM 87199
(505) 828-2200 FAX 797-9539

PROJECT Los Diamantes Subdivision
SUBJECT Hydrology Review Comments
BY _____ DATE _____
CHECKED _____ DATE _____
SHEET 1 OF 2

Comment # 8a + 8b on 8/12/15 Letter

Will flows from Del Timbre Lane flow over curb/drivepad before being collected by the inlet? even with 50% clogging factor on grate. Depths must be less than lowest pad elevation.

Top of Grate = 109.00
Top of Curb @ lowest point in culdesac = 109.67 (standard curb)

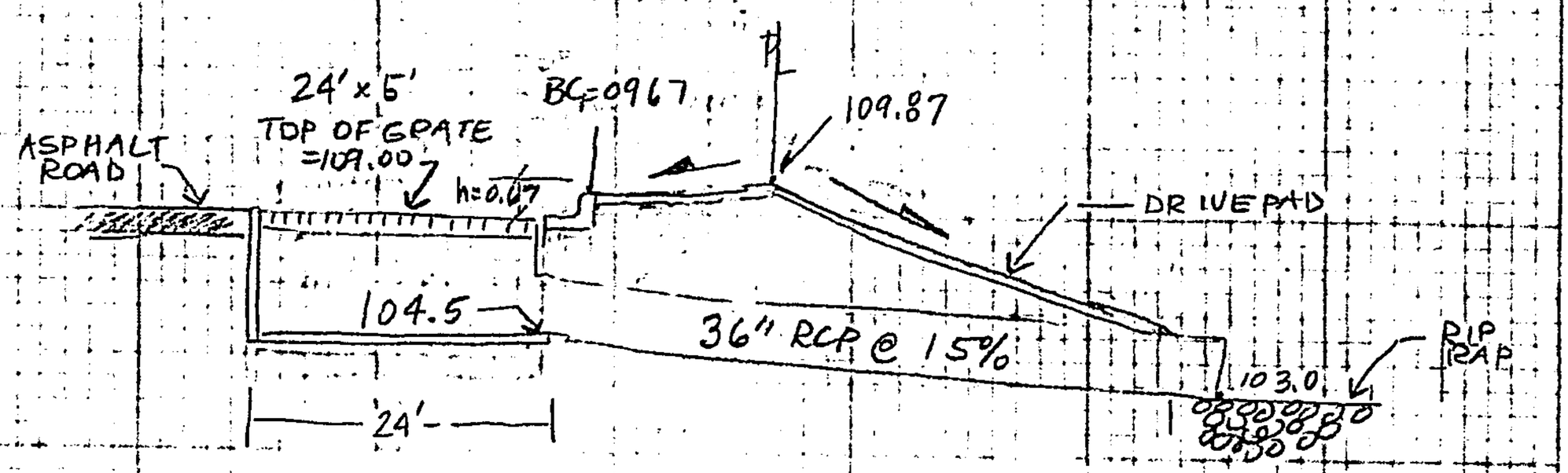


8a.) Using WIER EQUATION, calculate depth of flow over grate:

$$Q = C_w P h^{3/2}$$
$$54.35\,cfs = 3(24 \times 2)(h)^{3/2}$$
$$0.377 = h^{3/2}$$
$$0.52' = h$$
$$0.52' < 0.67'$$

∴ Flows stay in the street and do not flow through emergency overflow before being collected by the inlet.

8b) Assuming Grate is clogged by 50%:

$$Q = C_w P h^{3/2}$$
$$54.35 = 3(24) h^{3/2}$$
$$0.75 = h^{3/2}$$
$$0.82' = h$$
$$0.82 < 0.87$$

∴ Flows stay within the ROW ($P_L$)
Since $P_L$ is the highest point, the flows do not flow through the emergency overflow before being colleted by the inlet.

Lowest Pad elevation = 110.90
depth of water @ 50% clogging = 109.82

∴ Flows DO NOT encroach into private lot

D. Mark Goodwin & Associates, P.A.
Consulting Engineers
P.O. BOX 90606, ALBUQUERQUE, NM 87199
(505) 828-2200 FAX 797-9539

PROJECT Los Diamantes Subdivision
SUBJECT Hydrology Review Comments
BY _____ DATE _____
CHECKED _____ DATE _____
SHEET 2 OF 2

Comment 8a-8b on 8/12/15 Letter

ORIFACE EQUATION assuming 50% CLOGGING!

$Q = C_o A_g \sqrt{2gd}$

$Q = 54.35$

$A_g = 60\% A_{grate} = (24' \times 5')(0.6)$
$= 72 SF$

$C_o = 0.67$

$Q = C_o (.5 A_g)\sqrt{2gd}$

$54.35 = 0.67 (0.5 \cdot 72 SF)\sqrt{64.4}\sqrt{d}$

$0.28 = \sqrt{d}$

$0.08' = d$

$0.08' < 0.67$ ∴ even based on orifice equation, depth of flow is less than curb height so flow stays in street.

## Harmon Rita T.

**From:** Harmon Rita T.
**Sent:** Wednesday, August 12, 2015 2:53 PM
**To:** Diane Hoelzer (Diane@goodwinengineers.com)
**Subject:** Los Diamontes Subdivision
**Attachments:** N09D013_PP_SPSD_Cmmt4.pdf

Diane,

Please find attached a copy of the Hydrology Letter for the above referenced project.

Also, referring to Comment 9: HUD financing for 1st time homebuyers requires that there be a minimum of 1% drainage around the house. You should discuss this with the developer, and be sure he is aware of this requirement. – This explains why so many homebuilders are upset with us approving less than 1%.

Sincerely,

***Rita Harmon, P.E.***
*Senior Engineer*
Planning Department
Development & Review Services Division
600 2nd St. NW, Suite 201
Albuquerque, NM 87102
t 505-924-3695
f 505-924-3864

# CITY OF ALBUQUERQUE

PLANNING DEPARTMENT – Development Review Services

Richard J. Berry, Mayor

% D = 7.66 Ac.
Detention/free = 3.42 cfs/Ac

August 12, 2015

Diane Hoelzer, P.E.
**Mark Goodwin & Associates, P.A.**
P.O. Box 90606
Albuquerque, NM 87199

RE: **Los Diamantes Subdivision**
**Drainage Report, and Grading and Drainage Plan**
**Engineer's Stamp Date 8-4-2015 (File: N09D013)**

Dear Ms. Hoelzer:

Based upon the information provided in your submittal received 8-4-15, the above referenced submittals cannot be approved for Preliminary Plat and Site Plan for Subdivision action by the DRB until the following comments are addressed:

1. ✓ On the Preliminary plat: After discussing it with Jack Cloud, it would be better to use cross-hatching over the pond easement (#9) rather than put on a separate tract.
2. Remove keyed note 5, existing blanket easement to be entirely vacated.
3. Revise Keyed Note D to state "Extend existing 30"SD…to allow a discharge of Q100 = 48.7 cfs" (take out ***free***, and use analysis discharge amount)
4. Since a total of 78 cfs allowed, Tract A can discharge 29.3 cfs. Change note on plan and ensure 24" SD still works.
5. The 24" Storm pipe in 98th St. did not show on the Grading and Drainage plan. This SD should be built with this development (not future) otherwise the infrastructure list cannot be closed out. The City Engineer should be contacted if you are in disagreement.
6. Temporary Pond on Tract A: Per DPM 22-5.I, retention ponds must be designed for the 100 yr-10 day storm. Side slopes greater than 2:1 must be stabilized somehow and shown on the plan.
7. Informational comment: All Ponds are to be designed, detailed, and certified via the grading plan and not thru Work Order as had previous been practiced.
8. Since the pond will be constructed off the grading plan provide an enlarged plan of the pond.
   a. Detail the emergency overflow from Del Timbre Lane to the pond. Show that flows will not flow thru emergency overflow before being collected by the inlet. Is it hardscaped? Is there a drive pad? Or standard Curb?
   b. No calculations were included showing that the WSEL of the cattle guard/grate with a 50% clogging factor would not encroach into private lots.
   c. Provide construction details of the cattle guard grate inlet as this is not a Work Order item. Revise keyed note A as such.
   d. Show details for the manhole/wier cover. This will be certified on the grading plan and not on the Work Order, since the pond is Private.
   e. The emergency spillway for the pond (El. 108.0) appears to be lower than the sidewalk.

PO Box 1293
Albuquerque
New Mexico 87103
www.cabq.gov

9. Slopes on lot layout plan should be 1%. Homebuilders have complained that unless there is a 1 % slope, they have to regrade due to administrative issues. I am in the process of determining exactly what those issues are, and will inform you of any forthcoming information.
10. All retaining walls and slopes must be shown on the plan. Double retaining walls or a slope must be shown between lots 4-6 and 7-10. It should not be left up to the developer to determine where to put retaining walls, and where to slope – that should always be on the grading plan.

The following summary is included in order to maintain a record of how the allowable discharge was determined:

The Conclusions from the meeting 3-11-15, and noted in the 6-1-15 comment letter are maintained. Curtis Cherne concurs with those comments and they are reiterated below.

- Per the meeting notes dated 3-11-15, the allowable discharge into the 30" stub at SDMH 16 (CPN 736782) is the difference between the upstream and downstream Q, or 505cfs - 472cfs = 33 cfs. This value matches that shown on Exhibit 4, Master SD Basin Map, for basin DB16.
- Per the same meeting notes, the Q at 98th St. is noted as 569cfs. The difference between the upstream and downstream Q at MH 17 is 569cfs – 505cfs = 64cfs. Exhibit 4 shows that DB20 (the roadway) discharges 19cfs, so 45 cfs is the allowable from DB9 (Exhibit 4).
- Per meeting notes, a storm drain in 98th was required.
- During the meeting we agreed that the street flows in Blake could be ignored due to the timing of the hydrograph.

Based on the above notes, the drainage report, and response letter:

- The total allowable developed discharge from this site, including Tract A is 45cfs (MH17) + 33cfs (MH16) = **78 cfs.**
- If this subdivision discharges 48.7cfs, then Tract A is allowed to discharge 29.3cfs.
- 33cfs was intended to discharge to the existing stub at MH 16 and the remaining to MH17 in 98th St.
- This plan proposes to discharge approximately 50 cfs at MH 16, more than the intended 33 cfs into the 30" stub. This is acceptable as noted in #2 of the response letter dated June 2, 2015 and accepted by Hydrology.

If you have any questions, you can contact me at 924-3695.

Sincerely,

Rita Harmon, P.E.
Senior Engineer, Hydrology
Planning Department

Orig: Drainage filec.pdf
Addressee via Email

# DRAINAGE AND TRANSPORTATION INFORMATION SHEET
(Rev. 12/05)

PROJECT TITLE: Los Diamantes Subdivision ZONE MAP/DRG. FILE: **N09 / D013**
DRB#: 1010332
LEGAL DESCRIPTION: Tract 34D-1-A, Lands of Salazar Family Trust, Salazar Quatro Trust, JSJ Investment Company, Falba Hannett and Lands of Curb Inc
CITY ADDRESS: Gibson and 98 th Street

ENGINEERING FIRM: MARK GOODWIN & ASSOCIATES, PA
ADDRESS: PO Box 90606
CITY, STATE: Albuquerque, NM
CONTACT: Diane Hoelzer, PE N09D013
PHONE: 828-2200
ZIP CODE: 87199

OWNER: 98th Street LLC
ADDRESS: Box 27560
CITY, STATE: Albuquerque, NM
CONTACT: Rhett Waterman
PHONE: 248-1688
ZIP CODE: 87125

ARCHITECT: N/A
ADDRESS:
CITY, STATE:
CONTACT:
PHONE:
ZIP CODE:

SURVEYOR: Aldrich Land Surveying
ADDRESS:
CITY, STATE:
CONTACT: Tim Aldrich
PHONE: 328-3988
ZIP CODE:

CONTRACTOR: N/A
ADDRESS:
CITY, STATE:
CONTACT:
PHONE:
ZIP CODE:

TYPE OF SUBMITTAL:
X DRAINAGE REPORT(revised 8-4-15)
_____ DRAINAGE PLAN 1st SUBMITTAL
_____ DRAINAGE PLAN RESUBMITTAL
_____ CONCEPTUAL G & D PLAN
X GRADING PLAN **(dated 8-4-15)**
_____ EROSION CONTROL PLAN
_____ ENGINEER'S CERT (HYDROLOGY)
_____ CLOMR/LOMR
_____ TRAFFIC CIRCULATION LAYOUT
_____ ENGINEER/ARCHITECT CERT (TCL)
_____ ENGINEER/ARCHITECT (DRB SITE PLAN)
_____ OTHER

CHECK TYPE OF APPROVAL SOUGHT:
_____ SIA/FINANCIAL GUARANTEE RELEASE
X PRELIMINARY PLAT APPROVAL
_____ S. DEV. PLAN FOR SUB'D APPROVAL
_____ S. DEV. FOR BLDG. PERMIT APPROVAL
_____ SECTOR PLAN APPROVAL
_____ FINAL PLAT APPROVAL
_____ FOUNDATION PERMIT APPROVAL
_____ BUILDING PERMIT APPROVAL
_____ CERTIFICATE OF OCCUPANCY (PERM)
_____ CERTIFICATE OF OCCUPANCY (TEMP)
X GRADING PERMIT APPROVAL
_____ PAVING PERMIT APPROVAL
_____ WORK ORDER APPROVAL
_____ OTHER (SPECIFY)

WAS A PRE-DESIGN CONFERENCE ATTENDED:
_____ YES
_____ NO
_____ COPY PROVIDED

RECEIVED
AUG 04 2015
LAND DEVELOPMENT SECTION

SUBMITTED BY: Diane Hoelzer, PE DATE: August 4, 2015

Requests for approvals of Site Development Plans and/or Subdivision Plats shall be accompanied by a drainage submittal. The particular nature, location and scope to the proposed development define the degree of drainage detail. One or more of the following levels of submittal may be required based on the following:

1. **Conceptual Grading and Drainage Plan**: Required for approval of Site Development Plans greater than five (5) acres and Sector Plans.

2. **Drainage Plans**: Required for building permits, grading permits, paving permits and site plans less than five (5) acres.

3. **Drainage Report**: Required for subdivision containing more than ten (10) lots or constituting five (5) acres or more.

## Harmon Rita T.

**From:** Diane Hoelzer <Diane@goodwinengineers.com>
**Sent:** Monday, June 22, 2015 4:01 PM
**To:** Harmon Rita T.
**Subject:** RE: Los Diamantes - preliminary comment letter

**Importance:** High

Rita,

In response to your June 11 comment "email" letter:

1. A 24" storm drain pipe is shown on the grading plan now with the intent of conveying the allowable 100 year discharge of 28 cfs from Tract A.
2. Tract A will not discharge directly into 98th street. Runoff from Tract A will be intercepted by a detention pond to be located at the southeast corner of the Tract, and will be designed and detailed when the Site Plan is prepared at some future time.
3. I don't understand why the cattle guard grate is being required to be extended all the way across the road. It has been designed to capture the 100 year storm event as presently designed. It is also more desirable to try and keep it out of the two way traffic driving lanes. An emergency overflow spill way can be designed at the maintenance road driveway entrance to handle any possible overflow. Also, I don't understand why and where you want the additional inlets. With the current design, inlets are not necessary and if used somewhere upstream would further reduce the required length of the cattle guard but increase construction costs unnecessarily and cause complications with AMCWUA "non-interference" and separation between their infrastructure and the COA drainage facilities located within private streets. I am unclear why you are changing a design that hydraulically functions adequately.
4. Clarification of this comment is required. What lots TC/FL are you referring to ?
5. The maximum retaining wall height without a variance is 8.0 feet. Is there a new ordinance with regards to this? I understand that the maximum retaining wall/garden wall combination cannot be greater than 8.0 feet. This grading plan is only showing retaining walls. There is no indication on this grading plan about garden wall construction. The Site Plan addresses this issue. What is the purpose of showing a different hatch for 2.0 foot retaining walls? Is this a new hydrology requirement in the DPM?

Response to additional statements:

It should be noted that the Sun Gate Estates Exhibit 4 indicated a total calculated discharge from this project site of 50 cfs+33 Cfs = 83 cfs, AND that the hydraulic grade line in the construction plans indicates the water surface is well below the top of pipe which would indicate that it is quite possible the pipe could handle more than the flow that is currently indicated on the construction plans.

I am requesting further discussion and clarification on # 3, 4 and 5 above before I can respond adequately with appropriate changes to the plan.

*Diane Hoelzer, PE*
**MARK GOODWIN & ASSOCIATES, PA**
*diane@goodwinengineers.com*
**(505) 828-2200**

**From:** Harmon Rita T. [mailto:rharmon@cabq.gov]
**Sent:** Thursday, June 11, 2015 11:30 AM
**To:** Diane Hoelzer
**Subject:** Los Diamantes - preliminary comment letter

Diane,
I have started to review your report and revised plan and have some initial comments. Due to other priorities, I will not be able to finish this review till the end of next week. In the meantime, I will be giving you my initial comments so as not to hold you up.

Dear Ms. Hoelzer:

Based upon the information provided in your submittal received 6-5-15, the above referenced plan cannot be approved for Preliminary Plat and Grading Permit until the following comments are addressed:

1. Since Tract A is being created from this platting/subdivision action, infrastructure required to convey flows from developed Tract A to MH17 in 98th St./Blake must be included in the infrastructure list and financially guaranteed at this time. Include in the report calculations for this infrastructure and show on the drainage plan. It is common practice to provide an outfall for a Tract, even though Conceptual plans have not been developed. Design for a minimum of 28 cfs, as this is the allowed discharge from this site as noted in the final paragraph of this letter.
2. If Tract A is not intended to discharge into 98th St., then street capacity and flows from 98th St. roadway do not need to be analyzed.
3. The cattle guard inlet in Gold dust way Cul-de-sac will be acceptable if it matches that shown in the COA standards by extending it across the street and having inlets at both ends. Show that in the event of clogging, there is an emergency overflow. Show that in the event of clogging, any ponding will not extend into nearby lots. Is it possible to use to use standard inlets in a sump condition on the opposite side of the cul-de-sac?
4. The TC/FL elevations along the Curb and Gutter are not readable. Please verify the elevations shown close to Tract B. Either there is a 4' difference, or the text is unreadable.
5. Retaining wall heights cannot be over 4'. Double walls will need to be added in some places. If Garden walls are used to retain close to 2', show those walls with a new hatch pattern on the plan.

The following summary is included in order to maintain a record of how the allowable discharge was determined:

The Conclusions from the meeting 3-11-15, and noted in the 6-1-15 comment letter are maintained. Curtis Cherne concurs with those comments and they are reiterated below.

- Per the meeting notes dated 3-11-15, the allowable discharge into the 30" stub at SDMH 16 (CPN 736782) is the difference between the upstream and downstream Q, or 505cfs - 472cfs = 33 cfs. This value matches that shown on Exhibit 4, Master SD Basin Map, for basin DB16.
- Per the same meeting notes, the Q at 98th St. is noted as 569cfs. The difference between the upstream and downstream Q at MH 17 is 569cfs – 505cfs = 64cfs. Exhibit 4 shows that DB20 (the roadway) discharges 19cfs, so 45 cfs is the allowable from DB9 (Exhibit 4).
- Per meeting notes, a storm drain in 98th was required.

- During the meeting we agreed that the street flows in Blake could be ignored due to the timing of the hydrograph.

Based on the above notes, the drainage report, and response letter:

- The total allowable developed discharge from this site, including Tract A is 45cfs (MH17) + 33cfs (MH16) = **78 cfs**.
- If this subdivision discharges 50 cfs, then Tract A is allowed 28 cfs.
- 33cfs was intended to discharge to the existing stub at MH 16 and the remaining to MH17 in 98th St.
- This plan proposes to discharge 50 cfs at MH 16, more than the intended 33 cfs into the 30" stub. This is acceptable as noted in #2 of the response letter dated June 2, 2015 and accepted by Hydrology.

***Rita Harmon, P.E.***
*Senior Engineer*
Planning Department
Development & Review Services Division
600 2nd St. NW, Suite 201
Albuquerque, NM 87102
t 505-924-3695
f 505-924-3864

# CITY OF ALBUQUERQUE

PLANNING DEPARTMENT – Development Review Services

Richard J. Berry, Mayor

July 9, 2015

Diane Hoelzer, P.E.
**Mark Goodwin & Associates, P.A.**
P.O. Box 90606
Albuquerque, NM 87199

RE: **Los Diamantes Subdivision**
**Drainage Report, and Grading and Drainage Plan**
**Engineer's Stamp Date 6-5-2015 (File: N09D013)**

Dear Ms. Hoelzer:

Based upon the information provided in your submittal received 6-5-15, the above referenced plan cannot be approved for Preliminary Plat and Grading Permit until the following comments are addressed:

1. Since Tract A is being created from this platting/subdivision action, infrastructure required to convey flows from developed Tract A to MH17 in 98th St. /Blake must be included in the infrastructure list and financially guaranteed at this time. Per your email dated 6/22/15 a 24" pipe will be shown. Locate the pipe such that it has minimum impact to the existing road. Include in the report all the calculations for this SD (include a preliminary Plan and Profile of the SD showing HGL) and show the SD on the drainage plan. Design for a minimum of 28cfs, as this is the allowed discharge from this site as noted in the final paragraph of this letter.
2. Tract A historically discharged to the NW corner of 98th St and Blake, and is now proposed to drain to a temporary pond. Per DPM 22-5.I, this pond must be sized as a full retention pond with an emergency overflow leading to 98th St. Calculations and pond details need to be included in with this project. Show pond volume and max WSEL. Alternatively, the pond may discharge to the 24" storm drain noted above.
3. According to the City engineer the cattle guard inlet shown is acceptable if a structural detail is provided, and included in the Work Order plan set. Remove city standard details from the report since grated inlet is custom designed.
4. Regarding the Cattle Guard Inlet: Per DPM 22 –D.3(4), Catch basins in sump condition need to be designed for account for system clogging. The DPM lists 2 emergency backup options, but a 3rd backup option is that the Cattle Guard can capture 2x the 100-yr event. Per your email you state that the maintenance road can be used as a spillway into the pond. This is acceptable, but show that the Max WSEL does not rise above any adjacent structure pad elevations. (1st backup option in the DPM) or show that the maintenance road/channel will convey overflows given a 50% clogging factor
5. The TC/FL elevations along the Curb and Gutter are barely readable – please darken the font. Looking at the elevations shown close to Tract B on Gibson Blvd, the TC is 48.17, FL is 44.5, top of sidewalk is 47.82. Obviously there are errors. Additionally, the passage way into the subdivision is from 47.82 to 46.00 and approximately 34' long, which gives you a slope of 5.35%. Is this ADA acceptable?

PO Box 1293
Albuquerque
New Mexico 87103
www.cabq.gov

6. Combination Garden/Retaining wall heights cannot be over 8'. A safe garden wall height (above the grade on the high side) is 4', which leaves a maximum retained height of 4' (per Jack Cloud). Walls between some lots retain about 6'. Double walls will need to be added in some places. Some engineers show tiered garden walls that are retaining a little less than 2' (since that is the max. allowed) to demonstrate how they are making up the difference. It is the engineer's choice as to what retaining strategy to use, and it appears you prefer to use double retaining walls.
7. On the plan under pond specifications provide max WSEL.

The following summary is included in order to maintain a record of how the allowable discharge was determined:

The Conclusions from the meeting 3-11-15, and noted in the 6-1-15 comment letter are maintained. Curtis Cherne concurs with those comments and they are reiterated below.

- Per the meeting notes dated 3-11-15, the allowable discharge into the 30" stub at SDMH 16 (CPN 736782) is the difference between the upstream and downstream Q, or 505cfs - 472cfs = 33 cfs. This value matches that shown on Exhibit 4, Master SD Basin Map, for basin DB16.
- Per the same meeting notes, the Q at 98th St. is noted as 569cfs. The difference between the upstream and downstream Q at MH 17 is 569cfs – 505cfs = 64cfs. Exhibit 4 shows that DB20 (the roadway) discharges 19cfs, so 45 cfs is the allowable from DB9 (Exhibit 4).
- Per meeting notes, a storm drain in 98th was required.
- During the meeting we agreed that the street flows in Blake could be ignored due to the timing of the hydrograph.

Based on the above notes, the drainage report, and response letter:

- The total allowable developed discharge from this site, including Tract A is 45cfs (MH17) + 33cfs (MH16) = **78 cfs**.
- If this subdivision discharges 51.6cfs, then Tract A is allowed to discharge 26.4cfs.
- 33cfs was intended to discharge to the existing stub at MH 16 and the remaining to MH17 in 98th St.
- This plan proposes to discharge 50 cfs at MH 16, more than the intended 33 cfs into the 30" stub. This is acceptable as noted in #2 of the response letter dated June 2, 2015 and accepted by Hydrology.

If you have any questions, you can contact me at 924-3695 or Rudy Rael at 924-3977.

Sincerely,

Rita Harmon, P.E.
Senior Engineer, Hydrology
Planning Department

RR/RH
Orig: Drainage filec.pdf
Addressee via Email

# DRAINAGE AND TRANSPORTATION INFORMATION SHEET
(Rev. 12/05)

PROJECT TITLE: Los Diamantes Subdivision ZONE MAP/DRG. FILE: **N09 / D013**
DRB#: 1010332
LEGAL DESCRIPTION: Tract 34D-1-A, Lands of Salazar Family Trust, Salazar Quatro Trust, JSJ Investment Company, Falba Hannett and Lands of Curb Inc
CITY ADDRESS: Gibson and 98 th Street

ENGINEERING FIRM: MARK GOODWIN & ASSOCIATES, PA
ADDRESS: PO Box 90606
CITY, STATE: Albuquerque, NM
CONTACT: Diane Hoelzer, PE
PHONE: 828-2200
ZIP CODE: 87199

OWNER: 98th Street LLC
ADDRESS: Box 27560
CITY, STATE: Albuquerque, NM
CONTACT: Rhett Waterman
PHONE: 248-1688
ZIP CODE: 87125

ARCHITECT: N/A
ADDRESS:
CITY, STATE:
CONTACT:
PHONE:
ZIP CODE:

SURVEYOR: Aldrich Land Surveying
ADDRESS:
CITY, STATE:
CONTACT: Tim Aldrich
PHONE: 328-3988
ZIP CODE:

CONTRACTOR: N/A
ADDRESS:
CITY, STATE:
CONTACT:
PHONE:
ZIP CODE:

TYPE OF SUBMITTAL:
X DRAINAGE REPORT(revised 6-5-15)
___ DRAINAGE PLAN 1st SUBMITTAL
___ DRAINAGE PLAN RESUBMITTAL
___ CONCEPTUAL G & D PLAN
X GRADING PLAN **(dated 6-5-15)**
___ EROSION CONTROL PLAN
___ ENGINEER'S CERT (HYDROLOGY)
___ CLOMR/LOMR
___ TRAFFIC CIRCULATION LAYOUT
___ ENGINEER/ARCHITECT CERT (TCL)
___ ENGINEER/ARCHITECT (DRB SITE PLAN)
___ OTHER

CHECK TYPE OF APPROVAL SOUGHT:
___ SIA/FINANCIAL GUARANTEE RELEASE
X PRELIMINARY PLAT APPROVAL
___ S. DEV. PLAN FOR SUB'D APPROVAL
___ S. DEV. FOR BLDG. PERMIT APPROVAL
___ SECTOR PLAN APPROVAL
___ FINAL PLAT APPROVAL
___ FOUNDATION PERMIT APPROVAL
___ BUILDING PERMIT APPROVAL
___ CERTIFICATE OF OCCUPANCY (PERM)
___ CERTIFICATE OF OCCUPANCY (TEMP)
X GRADING PERMIT APPROVAL
___ PAVING PERMIT APPROVAL
___ WORK ORDER APPROVAL
___ OTHER (SPECIFY)

RECEIVED
JUN 05 2015
LAND DEVELOPMENT SECTION

Ao verified cd w/submittal

WAS A PRE-DESIGN CONFERENCE ATTENDED:
___ YES
___ NO
___ COPY PROVIDED

DNA

SUBMITTED BY: Diane Hoelzer, PE DATE: June 5, 2015

Requests for approvals of Site Development Plans and/or Subdivision Plats shall be accompanied by a drainage submittal. The particular nature, location and scope to the proposed development define the degree of drainage detail. One or more of the following levels of submittal may be required based on the following:

1. **Conceptual Grading and Drainage Plan**: Required for approval of Site Development Plans greater than five (5) acres and Sector Plans.

2. **Drainage Plans**: Required for building permits, grading permits, paving permits and site plans less than five (5) acres.

3. **Drainage Report**: Required for subdivision containing more than ten (10) lots or constituting five (5) acres or more.

# CITY OF ALBUQUERQUE

PLANNING DEPARTMENT – Development Review Services

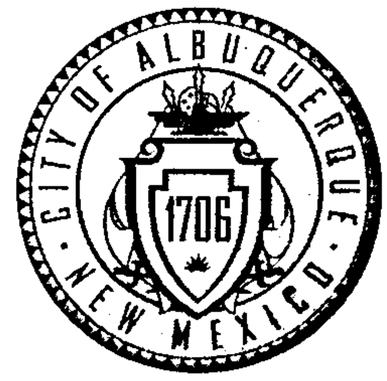


Richard J. Berry, Mayor

June 1, 2015

Diane Hoelzer, P.E.
**Mark Goodwin & Associates, P.A.**
P.O. Box 90606
Albuquerque, NM 87199

RE: **Los Diamantes Subdivision**
**Drainage Report, and Grading and Drainage Plan**
**Engineer's Stamp Date 3-24-2015 (File: N09D013)**

Dear Ms. Hoelzer:

Based upon the information provided in your submittal received 3-27-15, the above referenced plan cannot be approved for Preliminary Plat and Grading Permit until the following comments are addressed:

Conclusions from the meeting 3-11-15 were as follows:

- Per the meeting notes dated 3-11-15, the allowable discharge into the 30" stub at SDMH 16 (CPN 736782) is the difference between the upstream and downstream Q, or 505cfs - 472cfs = 33 cfs. This value matches that shown on Exhibit 4, Master SD Basin Map, for basin DB16.
- Per the same meeting notes, the Q at 98th St. is noted as 569cfs. The difference between the upstream and downstream Q at MH 17 is 569cfs – 505cfs = 64cfs. Exhibit 4 shows that DB20 (the roadway) discharges 19cfs, so 45 cfs is the allowable from DB9 (Exhibit 4).
- Per meeting notes, a storm drain in 98th was required.
- During the meeting we agreed that the street flows in Blake could be ignored due to the timing of the hydrograph.

Based on the above notes, revise the report to reflect the following:

- The total allowable developed discharge from this site, including Tract A is 45cfs (MH17) + 33cfs (MH16) = **78 cfs**.
- Based on a proration of area, Tract A is allowed 78cfs*(5.67 Ac/19.86 Ac) = **23 cfs.** Areas were taken from the preliminary plat.
- The allowable discharge for this subdivision is 78cfs -23cfs = **55cfs**. Per Exhibit 4, if 33cfs was intended to the existing stub, then the remaining 22cfs was intended to discharge to a storm drain in 98th St.

Comments:

1. Provide a plan to collect flows from developed Tract A and 98th St. roadway. CPN 736782 shows a stub at MH 17 that was intended to collect flows from DB9 and DB20. It is noted that there are inlets on 98th street near Blake at present.

PO Box 1293
Albuquerque
New Mexico 87103
www.cabq.gov

2. It is acceptable to discharge more than the intended 33 cfs into the 30" stub. How is the discharge part of the rating curb calculated in AHYMO? Also show that the 72" SD between MH 16 and 17 has capacity.
3. The grated inlet in Gold dust way Cul-de-sac is not a COA standard. Provide standard inlets.
4. Show Pond Volume on the Plan. also needed for temp pond.
5. If Tract A is intended to discharge into 98th St. in the undeveloped condition, a desilting pond should be shown on the grading plan. Contours show that the SE corner of Tract A is at same elevation as T.O. Curb but view from google earth shows it to be lower than T.O. Curb in that area. Please confirm survey is accurate.

If you have any questions, you can contact me at 924-3695.

Sincerely,

Rita Harmon, P.E.
Senior Engineer, Planning Dept.
Development Review Services

Orig: Drainage file
c.pdf Addressee via Email

# DRAINAGE AND TRANSPORTATION INFORMATION SHEET
(Rev. 12/05)

PROJECT TITLE: Los Diamantes Subdivision ZONE MAP/DRG. FILE: **N09 / D013**
DRB#: 1010332
LEGAL DESCRIPTION: Tract 34D-1-A, Lands of Salazar Family Trust, Salazar Quatro Trust, JSJ Investment Company, Falba Hannett and Lands of Curb Inc
CITY ADDRESS: Gibson and 98 th Street

ENGINEERING FIRM: MARK GOODWIN & ASSOCIATES, PA
ADDRESS: PO Box 90606
CITY, STATE: Albuquerque, NM
CONTACT: Diane Hoelzer, PE
PHONE: 828-2200
ZIP CODE: 87199

OWNER: 98th Street LLC
ADDRESS: Box 27560
CITY, STATE: Albuquerque, NM
CONTACT: Rhett Waterman
PHONE: 248-1688
ZIP CODE: 87125

ARCHITECT: N/A
ADDRESS:
CITY, STATE:
CONTACT:
PHONE:
ZIP CODE:

SURVEYOR: Aldrich Land Surveying
ADDRESS:
CITY, STATE:
CONTACT: Tim Aldrich
PHONE: 328-3988
ZIP CODE:

CONTRACTOR: N/A
ADDRESS:
CITY, STATE:
CONTACT:
PHONE:
ZIP CODE:

TYPE OF SUBMITTAL:
X DRAINAGE REPORT
___ DRAINAGE PLAN 1st SUBMITTAL
___ DRAINAGE PLAN RESUBMITTAL
___ CONCEPTUAL G & D PLAN
X GRADING PLAN **(dated 3-24-15)**
___ EROSION CONTROL PLAN
___ ENGINEER'S CERT (HYDROLOGY)
___ CLOMR/LOMR
___ TRAFFIC CIRCULATION LAYOUT
___ ENGINEER/ARCHITECT CERT (TCL)
___ ENGINEER/ARCHITECT (DRB SITE PLAN)
___ OTHER

CHECK TYPE OF APPROVAL SOUGHT:
___ SIA/FINANCIAL GUARANTEE RELEASE
X PRELIMINARY PLAT APPROVAL
___ S. DEV. PLAN FOR SUB'D APPROVAL
___ S. DEV. FOR BLDG. PERMIT APPROVAL
___ SECTOR PLAN APPROVAL
___ FINAL PLAT APPROVAL
___ FOUNDATION PERMIT APPROVAL
___ BUILDING PERMIT APPROVAL
___ CERTIFICATE OF OCCUPANCY (PERM)
___ CERTIFICATE OF OCCUPANCY (TEMP)
X GRADING PERMIT APPROVAL
___ PAVING PERMIT APPROVAL
___ WORK ORDER APPROVAL
___ OTHER (SPECIFY)

RECEIVED
MAR 27 2015
LAND DEVELOPMENT SECTION

WAS A PRE-DESIGN CONFERENCE ATTENDED:
___ YES
___ NO
___ COPY PROVIDED

$960.00

SUBMITTED BY: Diane Hoelzer, PE DATE: March 24, 2015

Requests for approvals of Site Development Plans and/or Subdivision Plats shall be accompanied by a drainage submittal. The particular nature, location and scope to the proposed development define the degree of drainage detail. One or more of the following levels of submittal may be required based on the following:

1. **Conceptual Grading and Drainage Plan**: Required for approval of Site Development Plans greater than five (5) acres and Sector Plans.

2. **Drainage Plans**: Required for building permits, grading permits, paving permits and site plans less than five (5) acres.

3. **Drainage Report**: Required for subdivision containing more than ten (10) lots or constituting five (5) acres or more.

# CITY OF ALBUQUERQUE

PLANNING DEPARTMENT – Development Review Services

Richard J. Berry, Mayor

February 3, 2015

Diane Hoelzer, P.E.
**Mark Goodwin & Associates, P.A.**
P.O. Box 90606
Albuquerque, NM 87199

RE: **Los Diamantes Subdivision**
**Drainage Report, and Grading and Drainage Plan**
**Engineer's Stamp Date 1-13-2015 (File: N09D013)**

Dear Ms. Hoelzer:

Based upon the information provided in your submittal received 1-14-15, the above referenced plan cannot be approved for Preliminary Plat and Grading Permit until the following comments are addressed:

1. Provide Bench Mark information using NAVD 1988 Datum. Are the elevations shown in the new or old datum?
2. Aerial views show a pond in the NW corner and a channel further south that are not reflected by the existing contours. Are the contours from a historic LIDAR? Google map views show that this site is lower than 98th Street and Blake, but this is not reflected in the contours and flow line elevations. Do you have a current survey? Show Flowline elevations of Gibson, Blake and 98th St.
3. Tract A presently drains through the proposed development. How is Tract A proposed to drain in the interim and future conditions. Since there is no storm drain in 98th street, will Tract A also be discharging to the detention pond?
4. What is the meaning of the hatched line within the pond? It is not on the legend, but appears to be some sort of wall.
5. The outfall structure is 8.5' in diameter that discharges to a 30" SD. For safety reasons, it is preferred to provide a stand pipe/riser, with the top open for emergency overflow.
6. Show Volume and emergency overflow for the detention pond.
7. As-built Shows 30" stub out Inv.= 5097.17, rather than 5099.12 as shown on the Grading plan.
8. How will flows discharge into the pond?
9. Provide Basin Boundary map showing peak flow rate from each basin.
10. Provide Street capacity calculations. On Basin map show the max. peak flows for both the mountable curb sections and the standard curb sections.
11. The referenced Amole-Hubbell report was never approved by the City. It's primary purpose was to evaluate AMAFCA's facilities, but not the storm drain systems. While it provides guidance, further investigation is required to verify the allowed discharge into the 72" Storm Drain in Blake Road.

PO Box 1293
Albuquerque
New Mexico 87103
www.cabq.gov

12. Along that same note, what basins was the 72" Storm Drain in Blake road designed to support? Did it follow the Amole-Hubbell? Have there been any changes to the flow rate or design assumptions since its original design? Provide excerpts from this report to verify its present capacity.

If you have any questions, you can contact me at 924-3695.

Sincerely,

Rita Harmon, P.E.
Senior Engineer, Planning Dept.
Development Review Services

Orig: Drainage file
c.pdf Addressee via Email

**DRAINAGE AND TRANSPORTATION INFORMATION SHEET**
**(Rev. 12/05)**

N09D013

PROJECT TITLE: Los Diamantes Subdivision ZONE MAP/DRG. FILE: N 9 / D
DRB#: _____
LEGAL DESCRIPTION: Tract 34D-1-A, Lands of Salazar Family Trust, Salazar Quatro Trust, JSJ Investment Company, Falba Hannett and Lands of Curb Inc
CITY ADDRESS: Gibson and 98 th Street

ENGINEERING FIRM: MARK GOODWIN & ASSOCIATES, PA
ADDRESS: PO Box 90606
CITY, STATE: Albuquerque, NM
CONTACT: Diane Hoelzer, PE
PHONE: 828-2200
ZIP CODE: 87199

OWNER: 98th Street LLC
ADDRESS: Box 27560
CITY, STATE: Albuquerque, NM
CONTACT: Rhett Waterman
PHONE: 248-1688
ZIP CODE: 87125

ARCHITECT: N/A
ADDRESS:
CITY, STATE:
CONTACT:
PHONE:
ZIP CODE:

SURVEYOR: N/A
ADDRESS:
CITY, STATE:
CONTACT:
PHONE:
ZIP CODE:

CONTRACTOR: N/A
ADDRESS:
CITY, STATE:
CONTACT:
PHONE:
ZIP CODE:

TYPE OF SUBMITTAL:
X DRAINAGE REPORT
_____ DRAINAGE PLAN 1st SUBMITTAL
_____ DRAINAGE PLAN RESUBMITTAL
_____ CONCEPTUAL G & D PLAN
X GRADING PLAN **(dated 1-13-15)**
_____ EROSION CONTROL PLAN
_____ ENGINEER'S CERT (HYDROLOGY)
_____ CLOMR/LOMR
_____ TRAFFIC CIRCULATION LAYOUT
_____ ENGINEER/ARCHITECT CERT (TCL)
_____ ENGINEER/ARCHITECT (DRB SITE PLAN)
_____ OTHER

CHECK TYPE OF APPROVAL SOUGHT:
_____ SIA/FINANCIAL GUARANTEE RELEASE
X PRELIMINARY PLAT APPROVAL
_____ S. DEV. PLAN FOR SUB'D APPROVAL
_____ S. DEV. FOR BLDG. PERMIT APPROVAL
_____ SECTOR PLAN APPROVAL
_____ FINAL PLAT APPROVAL
_____ FOUNDATION PERMIT APPROVAL
_____ BUILDING PERMIT APPROVAL
_____ CERTIFICATE OF OCCUPANCY (PERM)
_____ CERTIFICATE OF OCCUPANCY (TEMP)
X GRADING PERMIT APPROVAL
_____ PAVING PERMIT APPROVAL
_____ WORK ORDER APPROVAL
_____ OTHER (SPECIFY)

RECEIVED
JAN 14 2015
LAND DEVELOPMENT SECTION

WAS A PRE-DESIGN CONFERENCE ATTENDED:
_____ YES
_____ NO
_____ COPY PROVIDED

SUBMITTED BY: Diane Hoelzer, PE DATE: January 13, 2015

Requests for approvals of Site Development Plans and/or Subdivision Plats shall be accompanied by a drainage submittal. The particular nature, location and scope to the proposed development define the degree of drainage detail. One or more of the following levels of submittal may be required based on the following:

1. **Conceptual Grading and Drainage Plan**: Required for approval of Site Development Plans greater than five (5) acres and Sector Plans.

2. **Drainage Plans**: Required for building permits, grading permits, paving permits and site plans less than five (5) acres.

3. **Drainage Report**: Required for subdivision containing more than ten (10) lots or constituting five (5) acres or more.

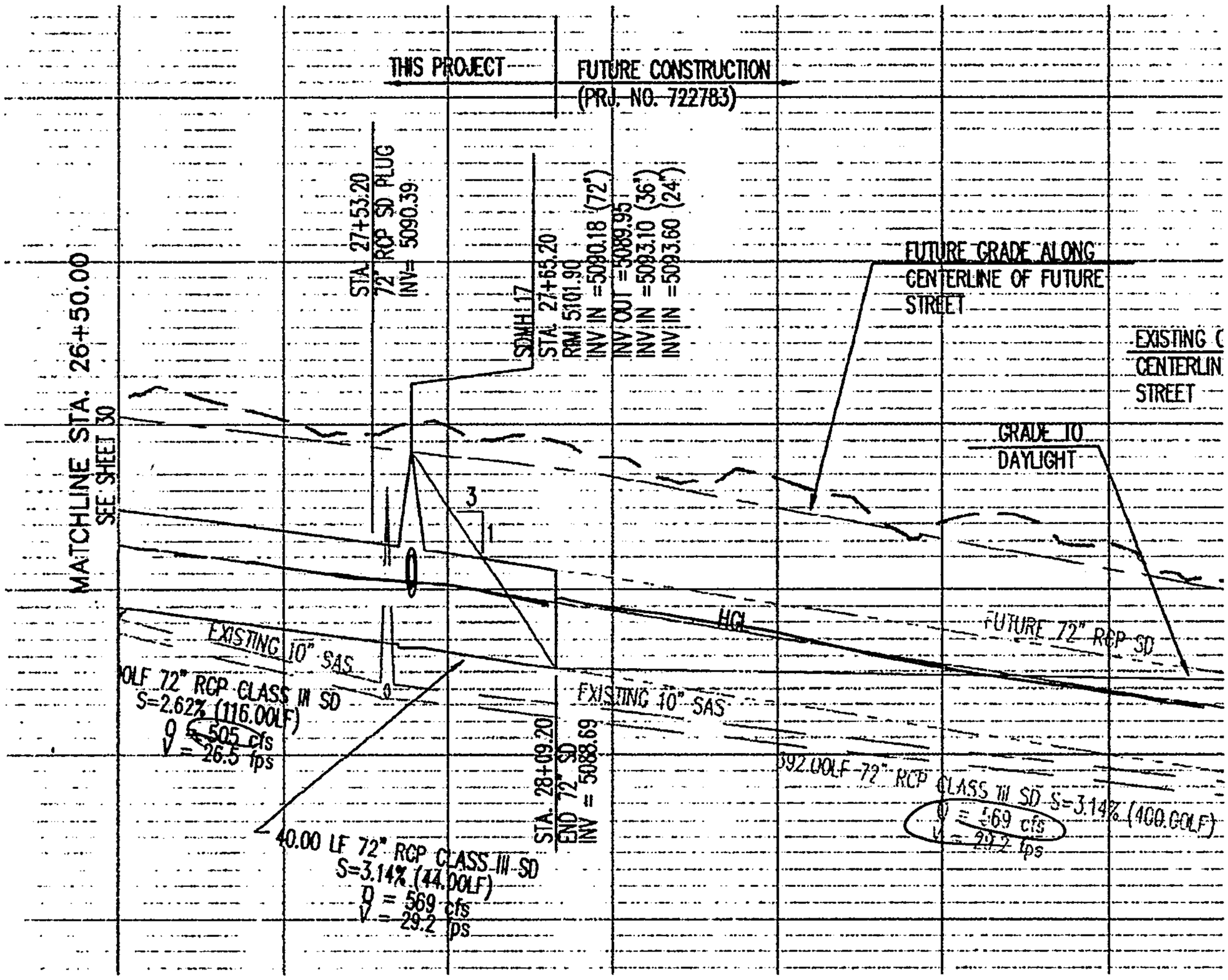


3-11-15

Based on N09/D007 and as-builts from Sun Gate Estates ph 1 736782 we determined the downstream capacity to

(472) to "505" at stub
before stub at pond (before stub e pond)
569 at 90th St

569
-505
564
- 19 street
45

Curb line or pipe storm drain on 90th is required

Curt Eckes / Denise Hedge 3-11-15

# CITY OF ALBUQUERQUE

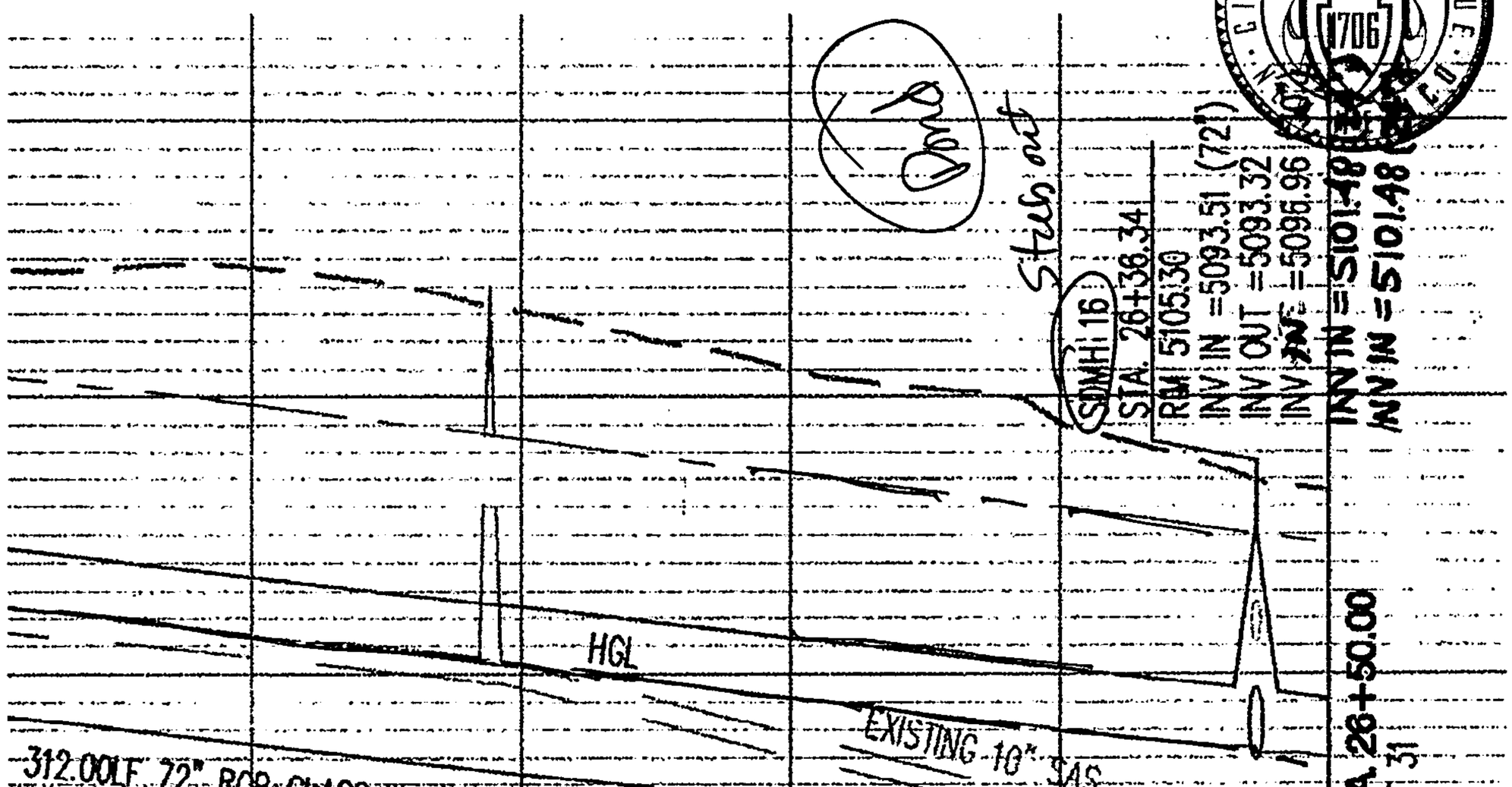



PO Box 1293

Albuquerque

New Mexico 87103

www.cabq.gov


505 cfs
- 472
33 cfs

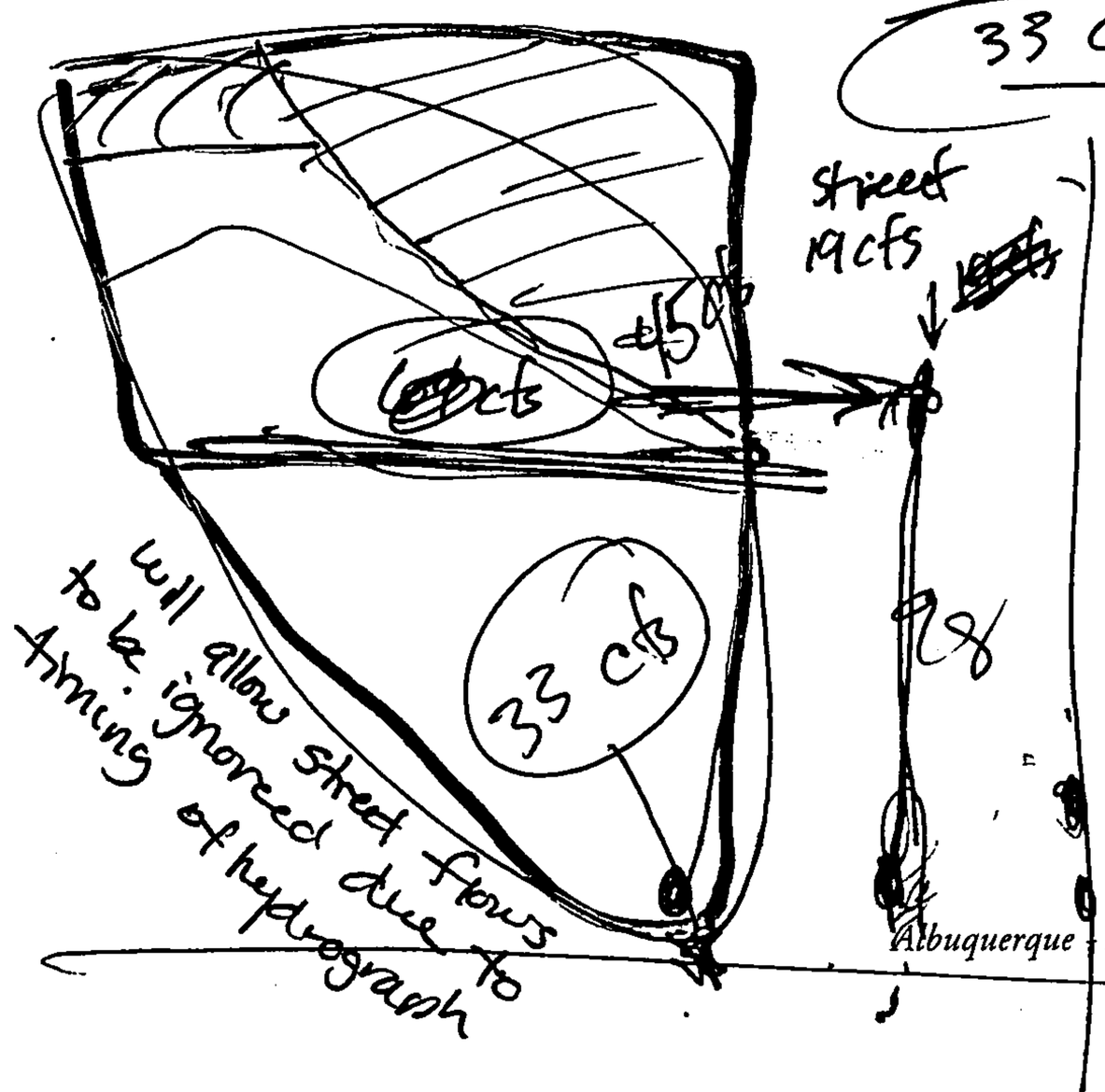


Los Diamantes

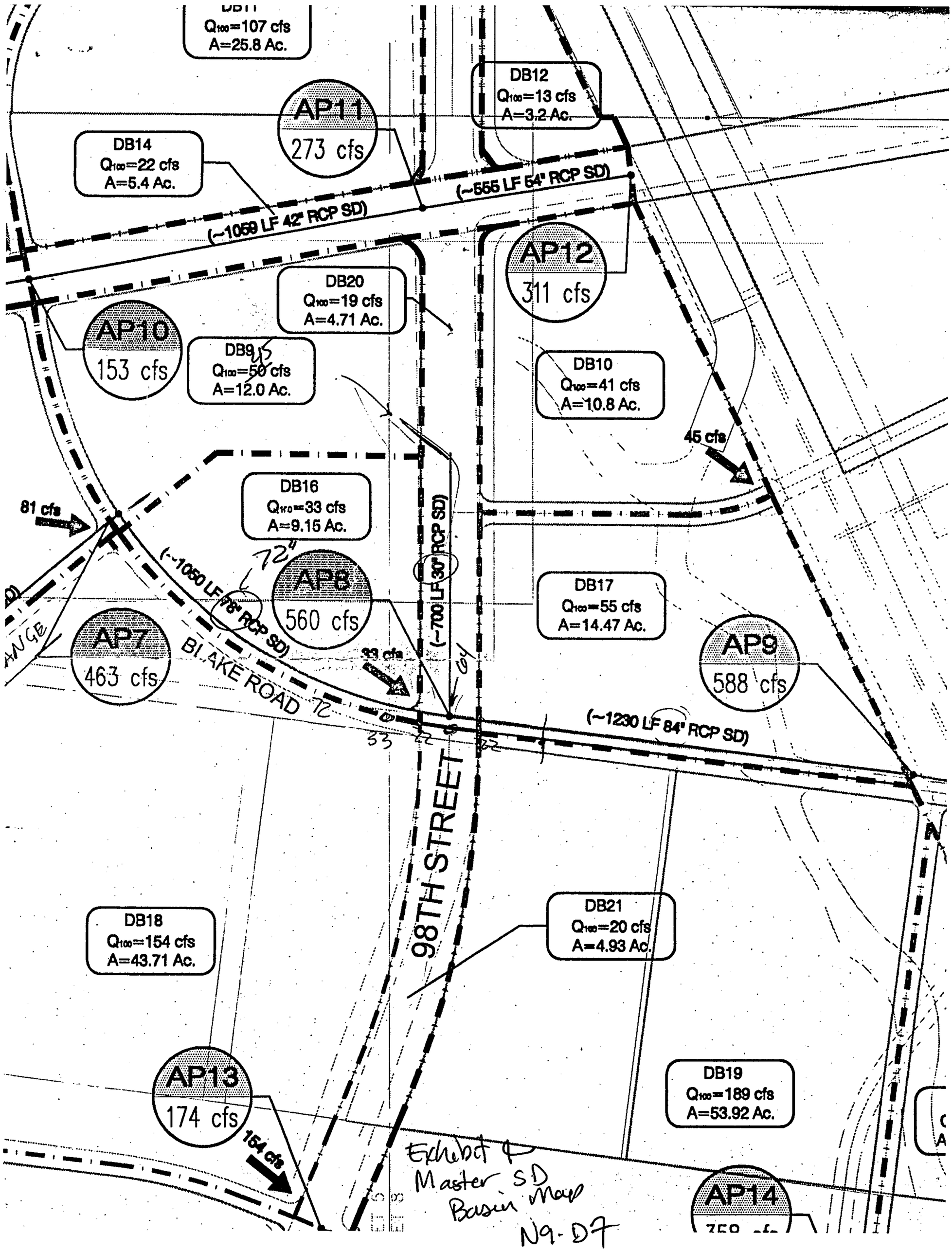


Exhibit 4
Master SD
Basin Map
N9-D7

Per COA CPN # 736782 Sheets 31 & 32

- stub out @ MH 16 is a 30" dia SD.
- Before MH 16 Q = 472 cfs (sht 30)
- after MH 16 Q = 505 cfs (sht 31)

$\Delta Q$ = 33 cfs which matches the discharge for DB16 on Exhibit 1 (The Master SD Basin Map)(N9 D007)

- after/downstream fr. MH 17 (@ intersection of Blake & 98th)
  Q = 569 cfs
  ∴ Allowable Q from future SD in 98th st. = 569 cfs − 505 cfs
  = 64 cfs.
- Per the Master SD Basin Map, 19 cfs comes from 98th st, and 50 cfs fr. DB9
  = 50 + 19 cfs = 69 cfs > 64 cfs allowd.

- Maintaining the 19 cfs for the road, the allowable discharge from DB9 is 64 cfs − 19 = 45 cfs.

- Per Master SD Basin Map

~~DB9 = 12 Ac~~ Qallow = 45 cfs

~~DB16 = 9.15 Ac~~ Qall = 33 cfs

~~21.15 Ac~~ 78 cfs

∴ ~~allow/Ac = 78 cfs/21.15 Ac = 3.69 cfs/Ac~~

Per Los Diamantes

Total Area = 25.16 Ac

less ROW - 5.30 Ac

19.86 Ac

TRACT A = 5.67 Ac.

Allowable discharge for Tract A:

$= (5.67/19.86)\ 78$ cfs

$= 23$ cfs

Allowable for Los Diamantes

$= 78 - 23 =$ 55 cfs

CPN 722786 - Silvertree

- Road way - 98th.

74