ALBUQUERQUE DIVERSION CHANNELS PROJECT

ALBUQUERQUE, NEW MEXICO & VICINITY

PLANS FOR CONSTRUCTION OF

SOUTH DIVERSION CHANNEL-PHASE II

INDEX OF DRAWING 5 4 3 1 2

PLATE	FILE NO.	TITLE
0	RGR-AL-0-0.4	INDEX
1	RGR-AL-0-1.1	GENERAL PLAN
2	RGR-AL-0-2	PLAN AND PROFILE VIII
3	RGR-AL-0-3.2	PLAN AND PROFILE IX
4	RGR-AL-0-4.4	PLAN AND PROFILE X
5	RGR-AL-0-5.2	PLAN AND PROFILE XI
6	RGR-AL-0-6.1	TYPICAL CHANNEL SECTIONS (RIPRAP)
7	RGR-AL-0-7	INLET STRUCTURES GRADING AND DETAILS
8	RGR-AL-0-8.1	DROP STRUCTURE STA.312 + 00 PLAN AND SECTIONS
9	RGR-AL-0-9.1	MISCELLANEOUS DETAILS
10	RGR-AL-0-10.2	INLET STA. 289 + 00
11	RGR-AL-0-11	INLET STA. 298 + 60
12	RGR-AL-0-12	INLET STA. 308 + 35
13	RGR-AL-0-13	INLET STA. 324 + 75
14	RGR-AL-0-14	INLET STA. 324 + 75
15	RGR-AL-0-15	INLET STA. 336 + 15
16	RGR-AL-0-16.2	INLET STA. 344 + 49.69
17	RGR-AL-0-17	INLET STA. 344 + 49.69
18	RGR-AL-0-18	INLET STA. 360 + 00
19	RGR-AL-0-19	INLET STA. 393 + 00
20	RGR-AL-0-20	DROP STRUCTURE STA. 312 + 00
21	RGR-AL-0-21.1	DROP STRUCTURE STA. 312 + 00
22	RGR-AL-0-22	DROP STRUCTURE STA. 312 + 00
23	RGR-AL-0-23	DROP STRUCTURE STA. 312 + 00
23A	RGR-AL-0-23A.1	STORM SEWER JUNCTION BOX STA. 330+20.24

REFERENCE NO.

1	RGR-AL-0-24	TITLE SHEET
2	RGR-AL-0-25	GENERAL PLAN
3	RGR-AL-0-26	PLAN AND PROFILE STA. 253 + 00 TO STA. 288 + 00
4	RGR-AL-0-27	PLAN AND PROFILE STA. 288 + 00 TO STA. 321 + 00
5	RGR-AL-0-28	PLAN AND PROFILE STA. 321 + 00 TO STA. 358 + 00
6	RGR-AL-0-29	PLAN AND PROFILE STA. 358 + 00 TO STA. 396 + 00
7	RGR-AL-0-30	SECTIONS AND DETAILS

U.S. ARMY ENGINEER DISTRICT, ALBUQUERQUE
CORPS OF ENGINEERS
ALBUQUERQUE, NEW MEXICO

SYMBOL	DESCRIPTIONS	DATE	APPROVAL
5	REVISED PLS. 3,4,5,6 & 10 AS CONSTRUCTED	APR 73	AT
1	REVISED PL 4	10 JAN 72	tbm
3	REVISED PLATES 3, 4 & 5	6 JAN 72	tbm
2	REVISED PLATES 5 AND 16.1	8 JUN 71	CBA
4	REVISED PLATES 1, 4, 8, 9, 10, 16, 21 & 23A	20 MAY 71	CBA

REVISIONS

SIGNATURES AFFIXED BELOW INDICATE OFFICIAL RECOMMENDATION AND APPROVAL OF ALL DRAWINGS IN THIS SET AS INDEXED ON THIS SHEET.

RECOMMENDED: Edwards R. Henry, CHIEF, DESIGN BRANCH

APPROVAL RECOMMENDED: Robert A. Hatchwell, CHIEF, ENGINEERING DIVISION

APPROVED: R. L. West APR 28 1971

CONTRACT NO. DACW47-71-C-0023 DRAWINGS OF WORK AS CONSTRUCTED FILE NUMBER: RGR-AL-0-0.5

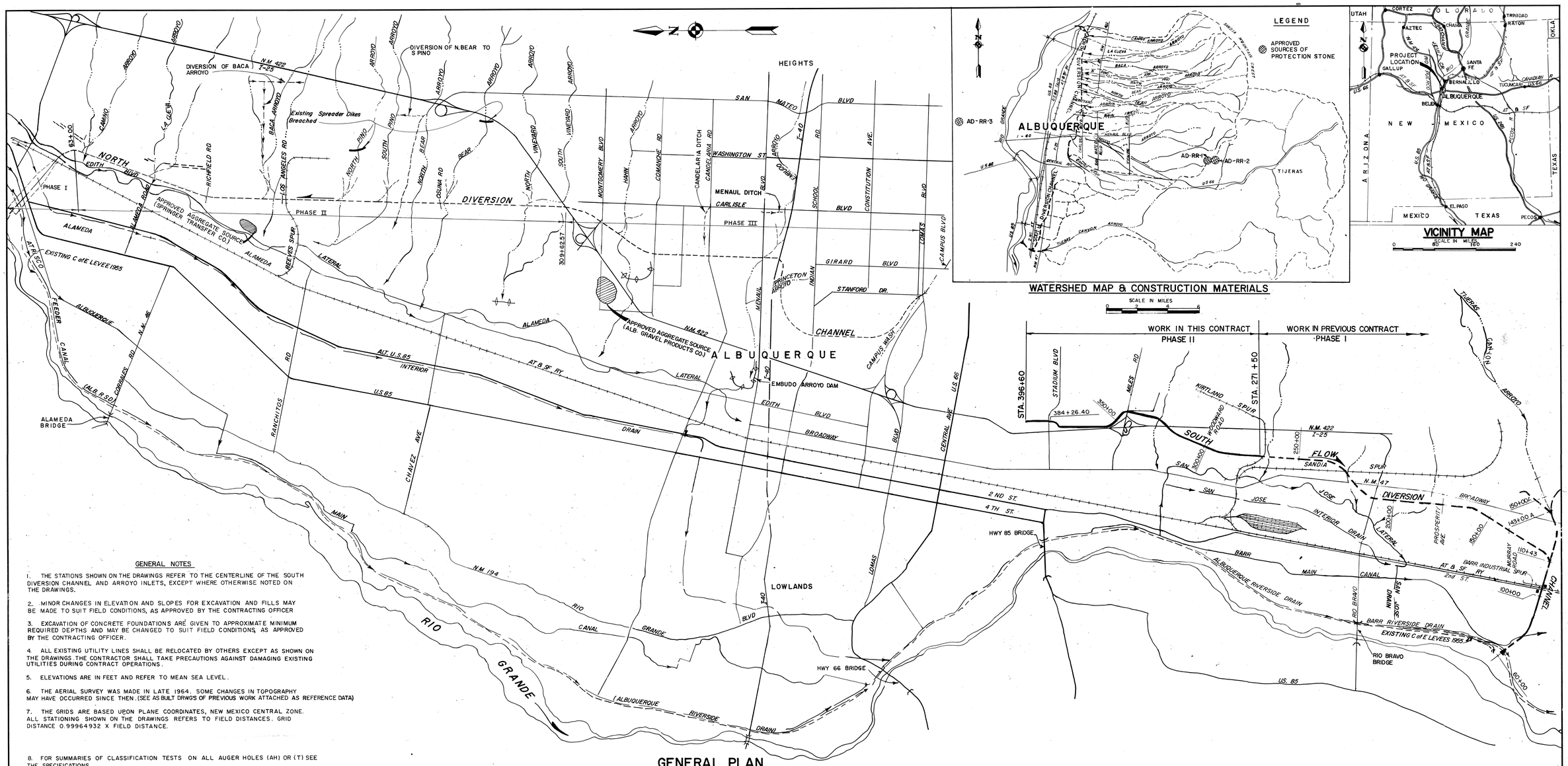

GENERAL PLAN

SCALE: 1" = 2000'

GRAPHIC SCALE

1" = 2000' 0 2000' 4000' 6000'

WATERSHED MAP & CONSTRUCTION MATERIALS

SCALE IN MILES 0 2 4 6

VICINITY MAP

SCALE IN MILES 0 80 160 240

GENERAL NOTES

1. THE STATIONS SHOWN ON THE DRAWINGS REFER TO THE CENTERLINE OF THE SOUTH DIVERSION CHANNEL AND ARROYO INLETS, EXCEPT WHERE OTHERWISE NOTED ON THE DRAWINGS.

2. MINOR CHANGES IN ELEVATION AND SLOPES FOR EXCAVATION AND FILLS MAY BE MADE TO SUIT FIELD CONDITIONS, AS APPROVED BY THE CONTRACTING OFFICER

3. EXCAVATION OF CONCRETE FOUNDATIONS ARE GIVEN TO APPROXIMATE MINIMUM REQUIRED DEPTHS AND MAY BE CHANGED TO SUIT FIELD CONDITIONS, AS APPROVED BY THE CONTRACTING OFFICER.

4. ALL EXISTING UTILITY LINES SHALL BE RELOCATED BY OTHERS EXCEPT AS SHOWN ON THE DRAWINGS. THE CONTRACTOR SHALL TAKE PRECAUTIONS AGAINST DAMAGING EXISTING UTILITIES DURING CONTRACT OPERATIONS.

5. ELEVATIONS ARE IN FEET AND REFER TO MEAN SEA LEVEL.

6. THE AERIAL SURVEY WAS MADE IN LATE 1964. SOME CHANGES IN TOPOGRAPHY MAY HAVE OCCURRED SINCE THEN. (SEE AS BUILT DRWGS OF PREVIOUS WORK ATTACHED AS REFERENCE DATA)

7. THE GRIDS ARE BASED UPON PLANE COORDINATES, NEW MEXICO CENTRAL ZONE. ALL STATIONING SHOWN ON THE DRAWINGS REFERS TO FIELD DISTANCES. GRID DISTANCE 0.99964932 X FIELD DISTANCE.

8. FOR SUMMARIES OF CLASSIFICATION TESTS ON ALL AUGER HOLES (AH) OR (T) SEE THE SPECIFICATIONS.

9. EXISTING FENCES WITHIN THE RIGHT-OF-WAY LIMITS SHALL BE REMOVED AND NOT REPLACED. THIS DOES NOT APPLY TO HIGHWAY FENCE WHICH WILL BE REMOVED AND REPLACED BY OTHERS.

10. FOR AS-BUILT OF EXISTING CONSTRUCTION, SEE REFERENCE DRAWINGS NUMBERS 1 THRU 7.

△1

12. SEE PLATE 10 FOR GENERAL STRUCTURAL NOTES THAT ARE APPLICABLE TO ALL CONCRETE AND REINFORCEMENT FOR THE PROJECT.

13. 3 — SECTION IDENTIFICATION NUMBER.
4 5 — NUMBER OF PLATE ON WHICH SECTION IS DRAWN. NUMBER OF PLATE ON WHICH SECTION IS LOCATED.

SYMBOL	DESCRIPTIONS	DATE	APPROVAL
△1	DELETED NOTE 11	4 MAY 71	W.M.J.

REVISIONS

U. S. ARMY ENGINEER DISTRICT, ALBUQUERQUE
CORPS OF ENGINEERS
ALBUQUERQUE, NEW MEXICO

DESIGNED BY: C.B.A.
DRAWN BY: ARS - DAG
CHECKED BY: W.M.J.

RIO GRANDE WATERSHED — RIO GRANDE, NEW MEXICO
ALBUQUERQUE DIVERSION CHANNELS
ALBUQUERQUE, NEW MEXICO

SOUTH DIVERSION CHANNEL
PHASE II (271+50 to 396+60)
GENERAL PLAN

SUBMITTED BY: James M. Goodwin, PROJECT ENGINEER
DATE: APR 23 1971

DACW47-71-B-0011
FILE NUMBER RGR-AL-0-1.1
PLATE 1

NOTE: ALL OPERATIONS PERFORMED IN ACCOMPLISHING THIS WORK SHALL BE DONE IN ACCORDANCE WITH THE APPLICABLE PROVISIONS OF THE CORPS OF ENGINEERS MANUAL "GENERAL SAFETY REQUIREMENTS" AND THE CONTRACT SPECIFICATIONS.

DRAWING OF WORK AS CONSTRUCTED

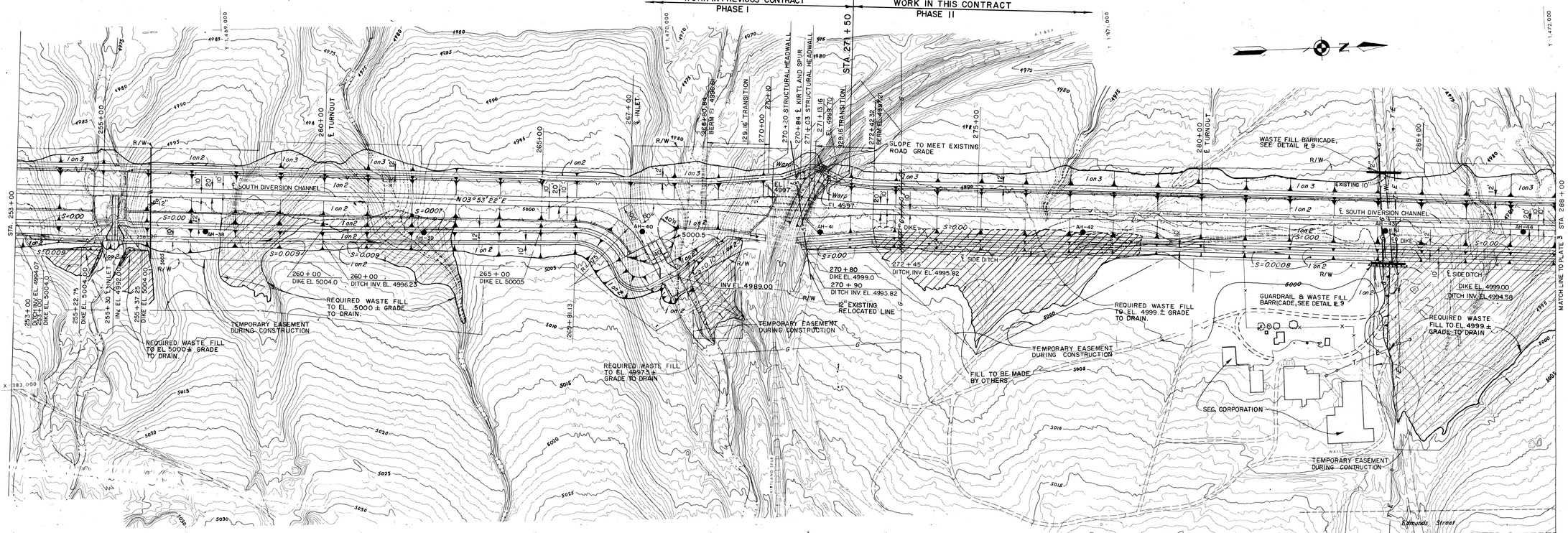

PLAN

SCALE 1" = 100'

NOTES:

1. FOR INLET DETAILS, SEE PLATE 7.
2. FOR TURNOUTS AND RAMP DETAILS, SEE PLATE 9.

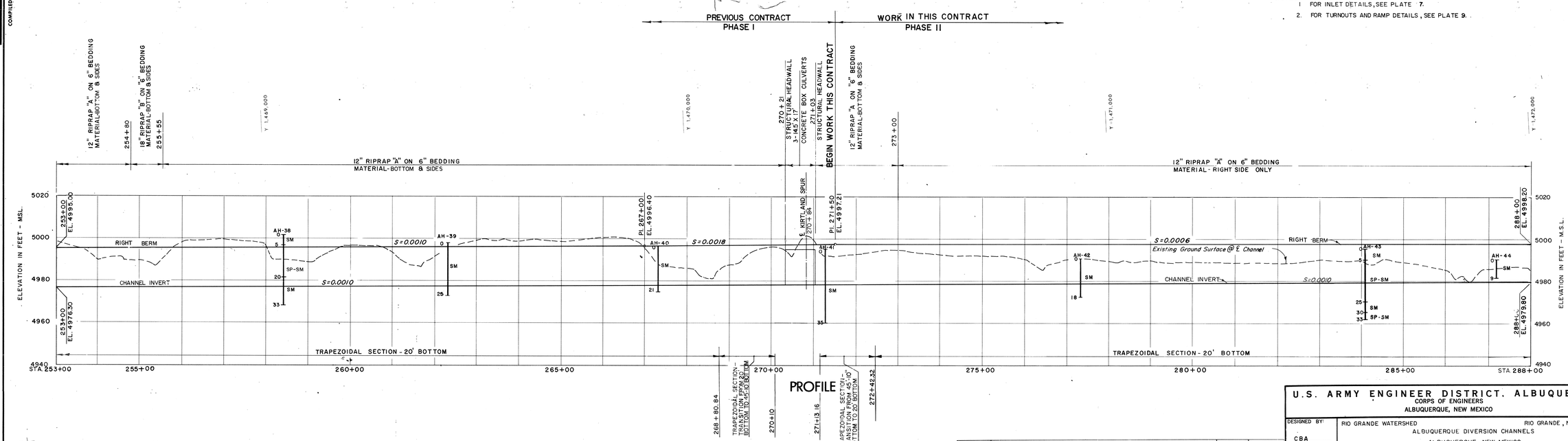

PROFILE

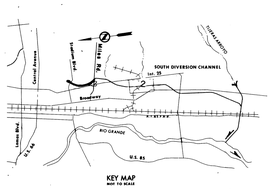

UTILITY LEGEND

	EXISTING	NEW	TO BE RELOCATED	TO BE ABANDONED
GAS LINE	—G—	—G—	—G—G—	#G#####G#
WATER LINE	—W—	—W—	—W—W—	#W#####W#
TELEPHONE	—T—	—T—	—T—T—	#T#####T#
ELECTRICAL	—E—	—E—	—E—E—	#E#####E#
SANITATION SEWER	—S—	—S—	—S—S—	#S#####S#
STORM SEWER	—SS—	—SS—	—SS—SS—	#SS#####SS#
PETROLEOM LINE	—P—	—P—	—P—P—	#P#####P#

GRAPHIC SCALE

1" = 100' 0 100' 200' 300'

NOTE: ALL OPERATIONS PERFORMED IN ACCOMPLISHING THIS WORK SHALL BE DONE IN ACCORDANCE WITH THE APPLICABLE PROVISIONS OF THE CORPS OF ENGINEERS MANUAL "GENERAL SAFETY REQUIREMENTS" AND THE CONTRACT SPECIFICATIONS.

SYMBOL	DESCRIPTIONS	DATE	APPROVAL

REVISIONS

U.S. ARMY ENGINEER DISTRICT, ALBUQUERQUE
CORPS OF ENGINEERS
ALBUQUERQUE, NEW MEXICO

DESIGNED BY: CBA
DRAWN BY: B.C.S. - D.A.G.
CHECKED BY: WMJ
SUBMITTED BY: PROJECT ENGINEER
DATE: APR 26 1971

RIO GRANDE WATERSHED — RIO GRANDE, NEW MEXICO
ALBUQUERQUE DIVERSION CHANNELS
ALBUQUERQUE, NEW MEXICO
SOUTH DIVERSION CHANNEL
PHASE II
PLAN & PROFILE VIII
STA. 271+50 to 288+00

DACW47-71-B-0011
FILE NUMBER RGR-AL-0-2
PLATE 2

Limbough Engineering and Aerial Surveys, Inc.

COMPILED BY PHOTOGRAMMETRIC METHODS

DRAWING OF WORK AS CONSTRUCTED

POSITION EDGE OF PRINT ON THIS LINE

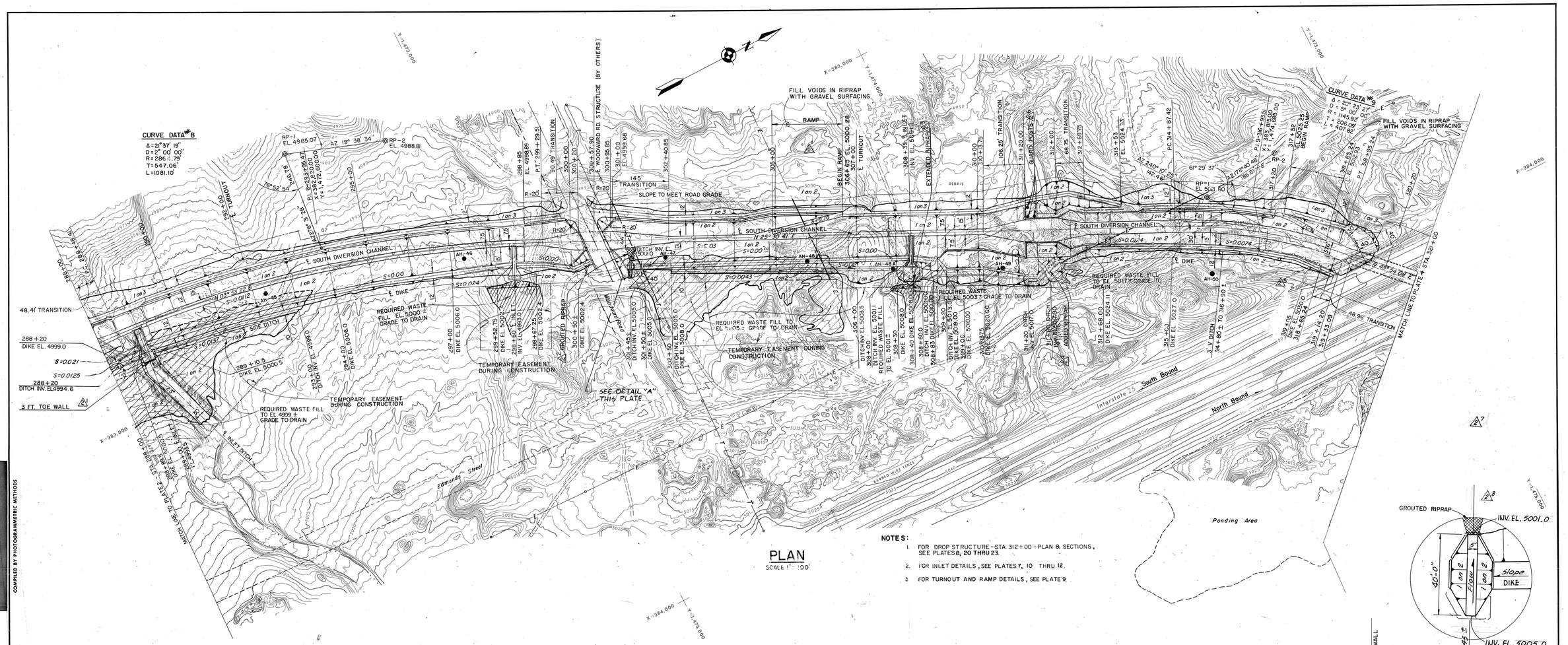

PLAN

SCALE 1" = 100'

NOTES:

1. FOR DROP STRUCTURE - STA. 312+00 - PLAN & SECTIONS, SEE PLATES 8, 20 THRU 23.
2. FOR INLET DETAILS, SEE PLATES 7, 10 THRU 12.
3. FOR TURNOUT AND RAMP DETAILS, SEE PLATE 9.

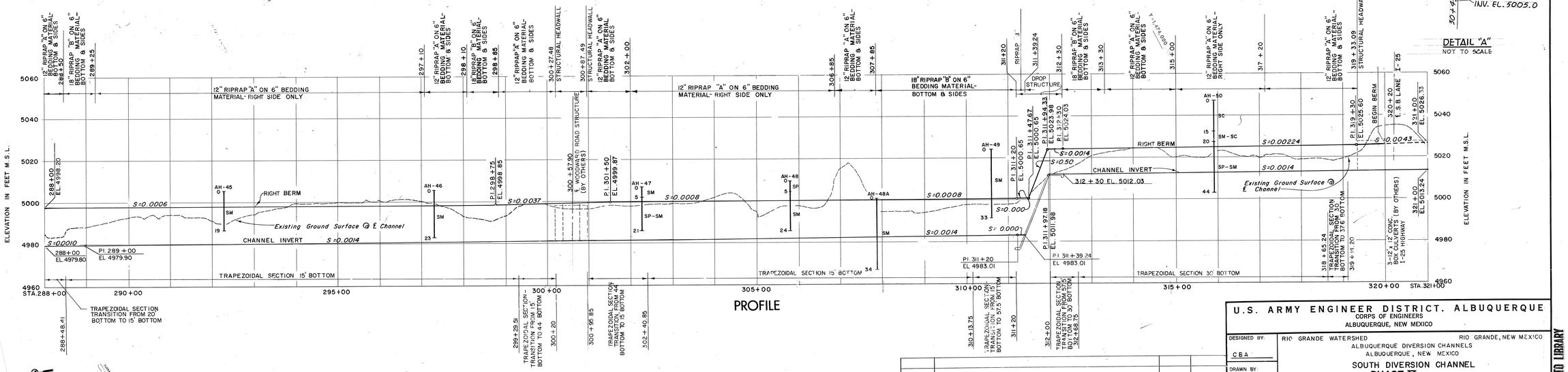

PROFILE

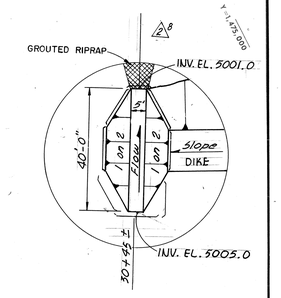

DETAIL "A"
NOT TO SCALE

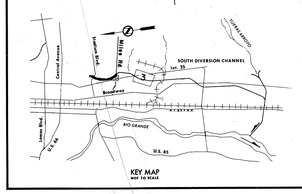

GRAPHIC SCALE
1" = 100' 0 100 200 300

NOTE: ALL OPERATIONS PERFORMED IN ACCOMPLISHING THIS WORK SHALL BE DONE IN ACCORDANCE WITH THE APPLICABLE PROVISIONS OF THE CORPS OF ENGINEERS MANUAL "GENERAL SAFETY REQUIREMENTS" AND THE CONTRACT SPECIFICATIONS.

SYMBOL	DESCRIPTIONS	DATE	APPROVAL
8	REVISED DRAWING AS CONSTRUCTED	16 APR 73	AT
	ADDED RAMP TO PLAN	1/15/72	CBA

REVISIONS

U.S. ARMY ENGINEER DISTRICT, ALBUQUERQUE
CORPS OF ENGINEERS
ALBUQUERQUE, NEW MEXICO

DESIGNED BY: CBA
DRAWN BY: B.G.S.-D.A.G.
CHECKED BY: W.J.M.

RIO GRANDE WATERSHED — RIO GRANDE, NEW MEXICO
ALBUQUERQUE DIVERSION CHANNELS
ALBUQUERQUE, NEW MEXICO

SOUTH DIVERSION CHANNEL
PHASE II
PLAN & PROFILE IX
STA. 288+00 TO STA. 321+00

SUBMITTED BY: Gene M. Goldsmith
PROJECT ENGINEER
DATE: APR 26 1971

FILE NUMBER: DACW47-71 B-0011
RGR-AL-O-3.2

PLATE 3

DRAWING OF WORK AS CONSTRUCTED

FILE COPY - RETURN TO LIBRARY

POSITION EDGE OF PRINT ON THIS LINE

Limbaugh Engineering and Aerial Surveys, Inc.
3705 Carlisle Blvd NE Albuquerque New Mexico

COMPILED BY PHOTOGRAMMETRIC METHODS

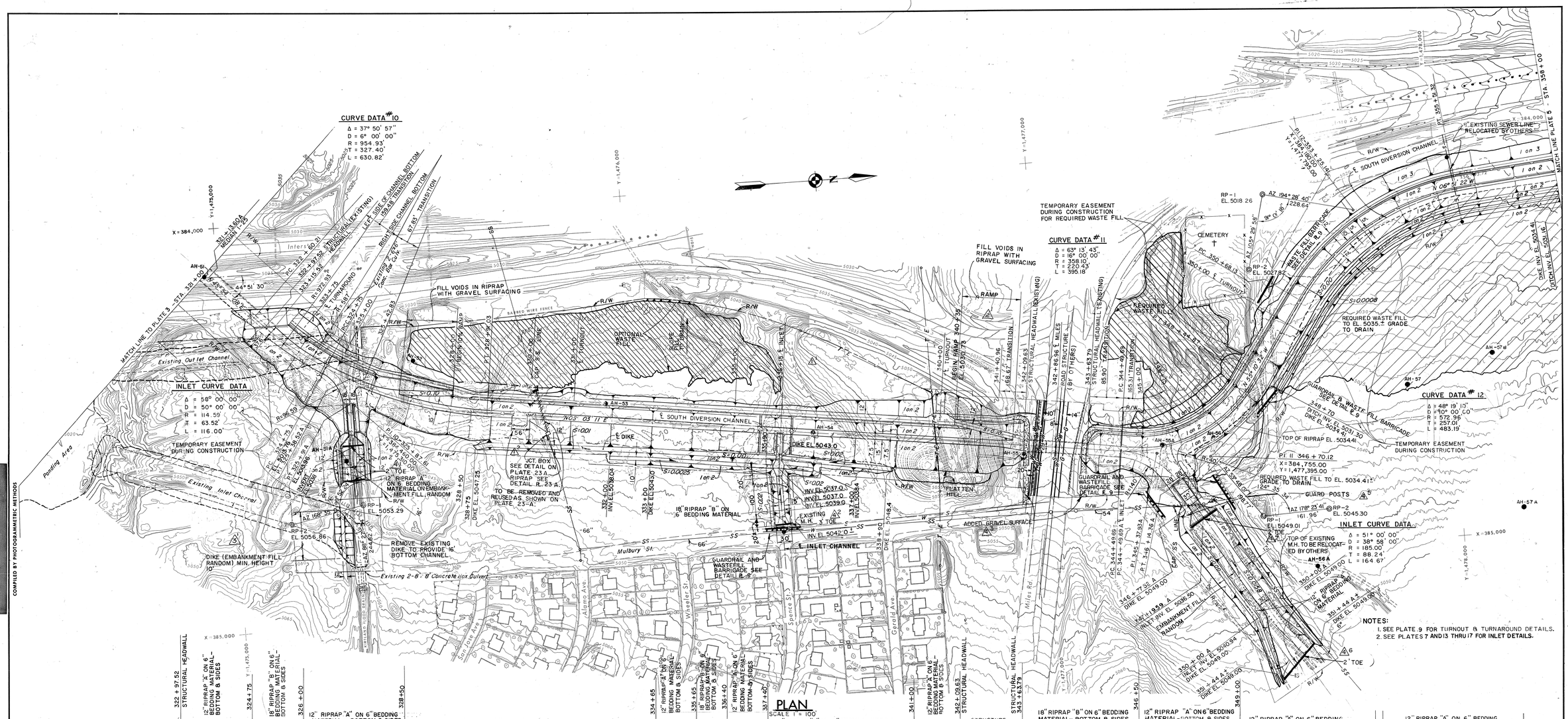

NOTES:
1. SEE PLATE 9 FOR TURNOUT & TURNAROUND DETAILS.
2. SEE PLATES 7 AND 13 THRU 17 FOR INLET DETAILS.

GRAPHIC SCALE
1" = 100'
0 50' 100' 200' 300'

NOTE ALL OPERATIONS PERFORMED IN ACCOMPLISHING THIS WORK SHALL BE DONE IN ACCORDANCE WITH THE APPLICABLE PROVISIONS OF THE CORPS OF ENGINEERS MANUAL "GENERAL SAFETY REQUIREMENTS" AND THE CONTRACT SPECIFICATIONS.

SYMBOL	DESCRIPTIONS	DATE	APPROVAL
16	REVISED DRAWING AS CONSTRUCTED	16 APR 73	AJT
15	ADDED & REMOVE EXISTING DIKE	1/10/72	[illegible]
14	ADDED RAMP TO PLAN	1/5/71	[illegible]
13	CHANGED R/W ALIGNMENT	14 MAY 71	W M J

REVISIONS

U.S. ARMY ENGINEER DISTRICT, ALBUQUERQUE
CORPS OF ENGINEERS
ALBUQUERQUE, NEW MEXICO

DESIGNED BY: C.B.A.
DRAWN BY: B.G.S.-D.A.G.
CHECKED BY: W.M.J.
SUBMITTED BY: [signature] PROJECT ENGINEER
DATE: APR 26 1971

RIO GRANDE WATERSHED — RIO GRANDE, NEW MEXICO
ALBUQUERQUE DIVERSION CHANNELS
ALBUQUERQUE, NEW MEXICO
SOUTH DIVERSION CHANNEL
PHASE II
PLAN & PROFILE X
STA. 321 + 00 TO STA. 358+00

DACW47 71-B-0011
FILE NUMBER RGR-AL-0-4.4
PLATE 4

DRAWING OF WORK AS CONSTRUCTED

FILE COPY - RETURN TO LIBRARY

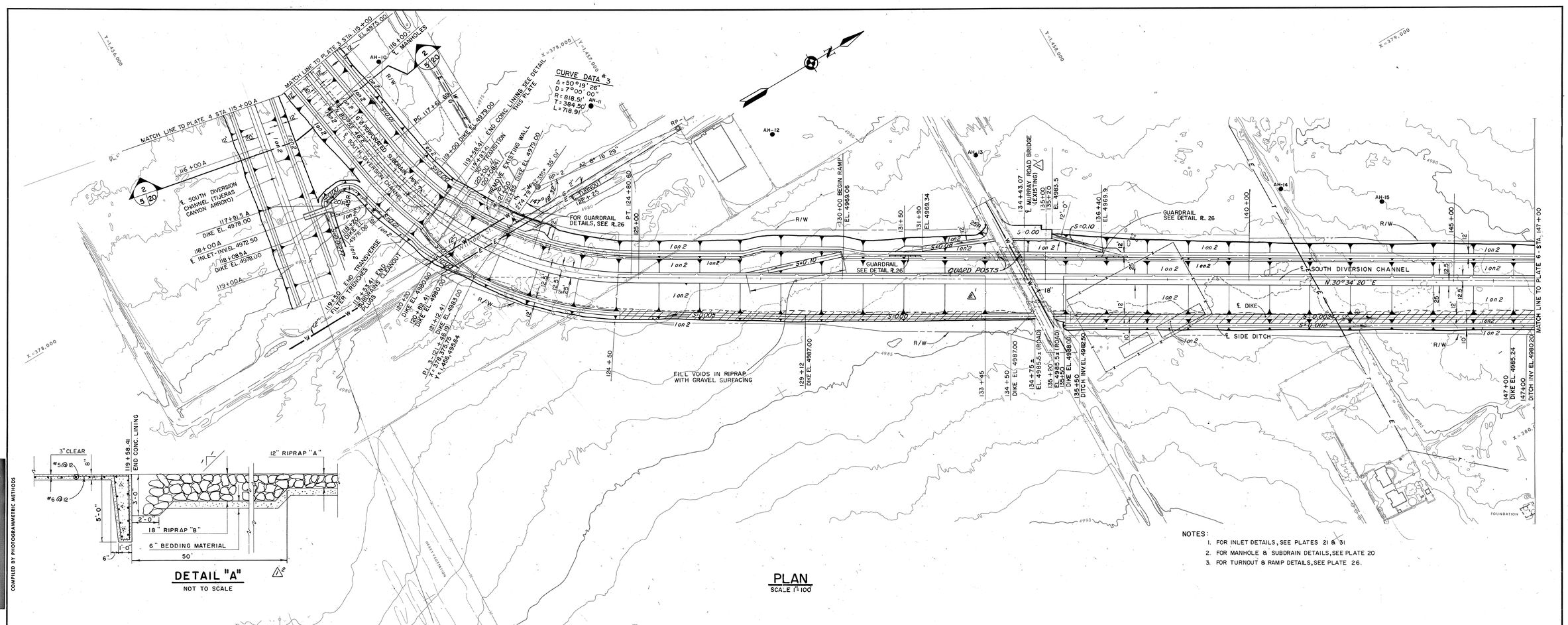

NOTES:

1. FOR INLET DETAILS, SEE PLATES 21 & 31
2. FOR MANHOLE & SUBDRAIN DETAILS, SEE PLATE 20
3. FOR TURNOUT & RAMP DETAILS, SEE PLATE 26.

GRAPHIC SCALE

1" = 100' 0 100' 200' 300'

NOTE: ALL OPERATIONS PERFORMED IN ACCOMPLISHING THIS WORK SHALL BE DONE IN ACCORDANCE WITH THE APPLICABLE PROVISIONS OF THE CORPS OF ENGINEERS MANUAL "GENERAL SAFETY REQUIREMENTS" AND THE CONTRACT SPECIFICATIONS.

SYMBOL	DESCRIPTIONS	DATE	APPROVAL
2	REVISED AS-BUILT	FEB 79	AJT
1	ADDED THE WORD EXISTING, REMOVED (BY OTHERS). ADDED REBAR AND MOVED LEADER LINE DETAIL "A"	21 JAN. 70	WMJ

REVISIONS

U.S. ARMY ENGINEER DISTRICT, ALBUQUERQUE
CORPS OF ENGINEERS
ALBUQUERQUE, NEW MEXICO

DESIGNED BY: D.E.B
DRAWN BY: BGS - DAG
CHECKED BY: CPD

RIO GRANDE WATERSHED — RIO GRANDE, NEW MEXICO
ALBUQUERQUE DIVERSION CHANNELS
ALBUQUERQUE, NEW MEXICO
SOUTH DIVERSION CHANNEL

PLAN & PROFILE IV

STA. 115+00 TO STA. 147+00

SUBMITTED BY: PROJECT ENGINEER
DATE: DEC. 1969

DACW 47-70-B-0004
FILE NUMBER RGR-AL-M-5.2
PLATE 5

DRAWING OF WORK AS-BUILT

Limbaugh Engineering and Aerial Surveys, Inc.
3925 Carlisle Blvd NE, Albuquerque, New Mexico
COMPILED BY PHOTOGRAMMETRIC METHODS

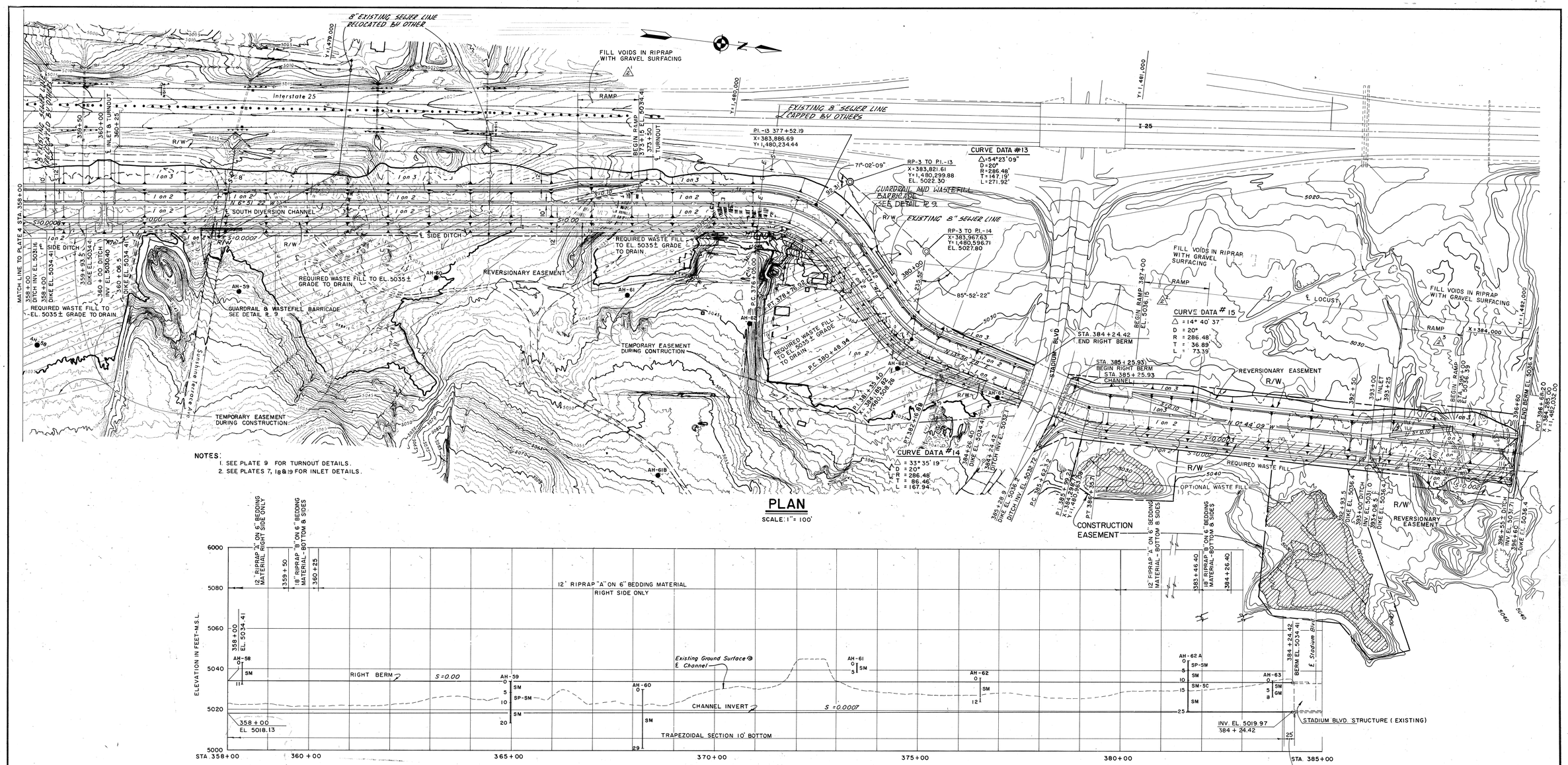

NOTES:
1. SEE PLATE 9 FOR TURNOUT DETAILS.
2. SEE PLATES 7, 18 & 19 FOR INLET DETAILS.

PLAN

SCALE: 1" = 100'

PROFILE

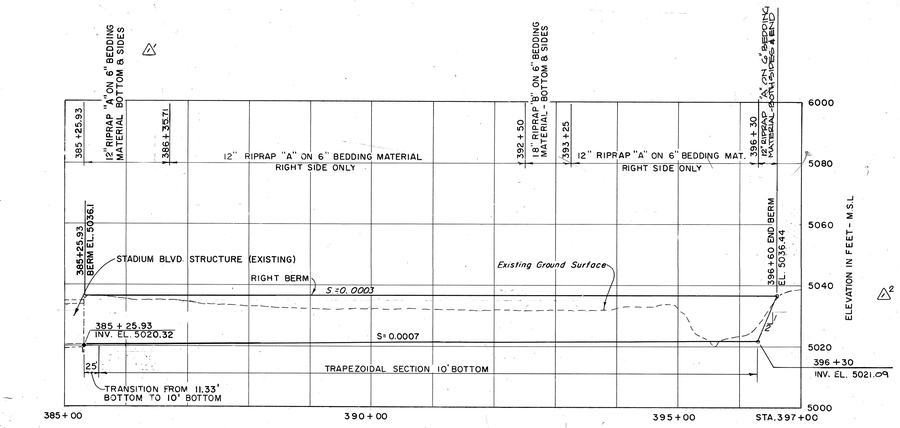

PROFILE

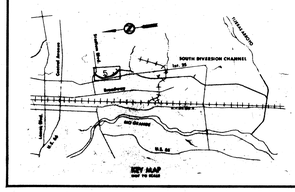

GRAPHIC SCALE
1" = 100' 0 100' 200' 300'

NOTE: ALL OPERATIONS PERFORMED IN ACCOMPLISHING THIS WORK SHALL BE DONE IN ACCORDANCE WITH THE APPLICABLE PROVISIONS OF THE CORPS OF ENGINEERS MANUAL "GENERAL SAFETY REQUIREMENTS" AND THE CONTRACT SPECIFICATIONS.

SYMBOL	DESCRIPTIONS	DATE	APPROVAL
△1	REVISED AS CONSTRUCTED	16 APR 73	PAT
△2	ADDED RAMPS TO PLAN	1/5/72	[illegible]
△3	REVISED IN ACCORDANCE WITH SPEC AMEND. NO. 6	8 JUN 71	CBA

REVISIONS

U S ARMY ENGINEER DISTRICT, ALBUQUERQUE
CORPS OF ENGINEERS
ALBUQUERQUE, NEW MEXICO

DESIGNED BY: CBA
DRAWN BY: R.E.I.
CHECKED BY: WMJ

RIO GRANDE WATERSHED — RIO GRANDE, NEW MEXICO
ALBUQUERQUE DIVERSION CHANNELS
ALBUQUERQUE, NEW MEXICO

SOUTH DIVERSION CHANNEL
PHASE II
PLAN & PROFILE XI
STA. 358+00 TO STA. 396+60

SUBMITTED BY: James D. Grodman
PROJECT ENGINEER
DATE: APR 26 1971

DACW47-71-B-0011
FILE NUMBER RGR-AL-0-5.3

PLATE 5

DRAWING OF WORK AS CONSTRUCTED

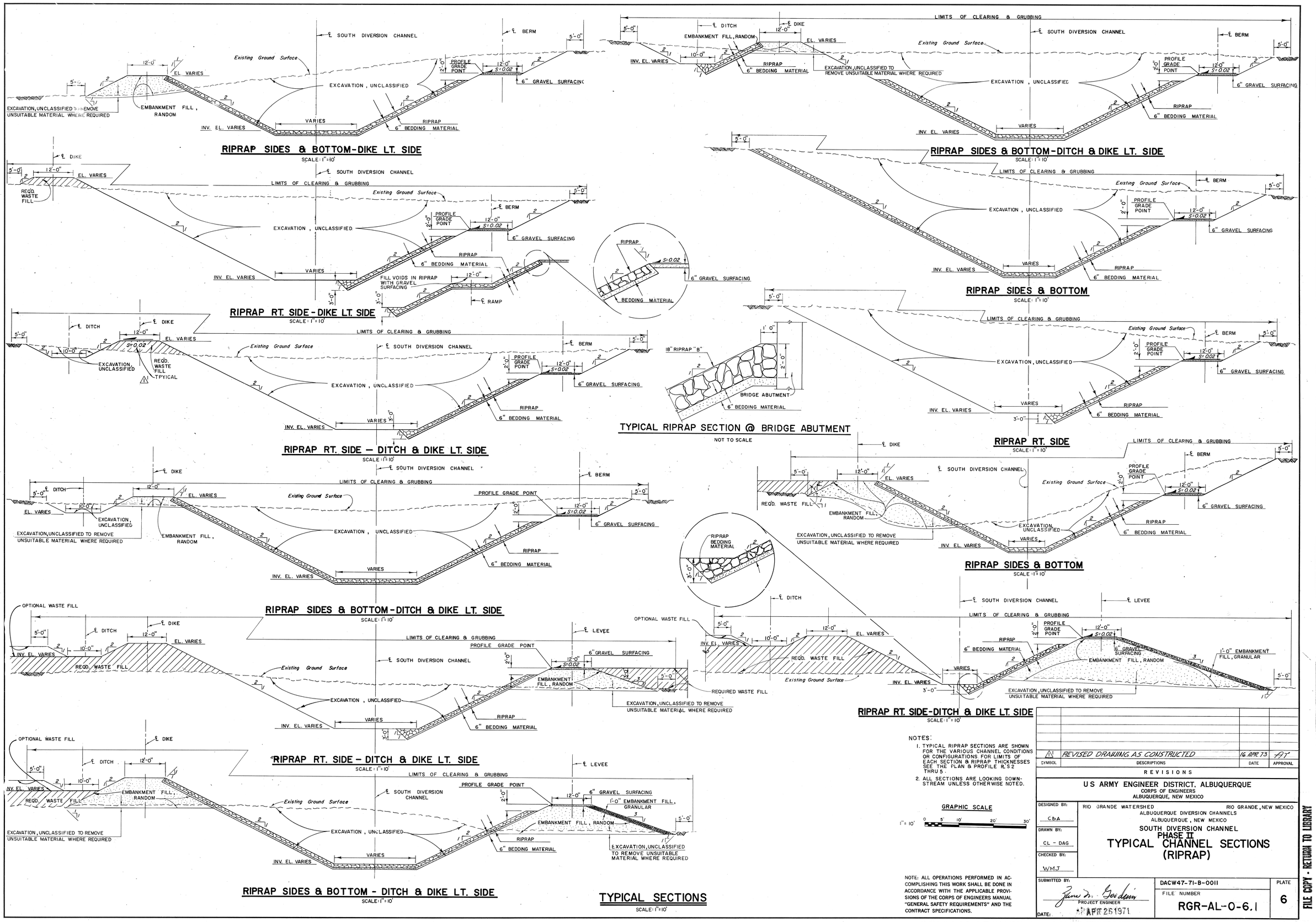

NOTES:

1. TYPICAL RIPRAP SECTIONS ARE SHOWN FOR THE VARIOUS CHANNEL CONDITIONS OR CONFIGURATIONS FOR LIMITS OF EACH SECTION & RIPRAP THICKNESSES SEE THE PLAN & PROFILE R.S 2 THRU 5.
2. ALL SECTIONS ARE LOOKING DOWN-STREAM UNLESS OTHERWISE NOTED.

GRAPHIC SCALE

1" = 10' 0 5' 10' 20' 30'

NOTE: ALL OPERATIONS PERFORMED IN ACCOMPLISHING THIS WORK SHALL BE DONE IN ACCORDANCE WITH THE APPLICABLE PROVISIONS OF THE CORPS OF ENGINEERS MANUAL "GENERAL SAFETY REQUIREMENTS" AND THE CONTRACT SPECIFICATIONS.

SYMBOL	DESCRIPTIONS	DATE	APPROVAL
1	REVISED DRAWING AS CONSTRUCTED	16 APR 73	AT

REVISIONS

US ARMY ENGINEER DISTRICT, ALBUQUERQUE
CORPS OF ENGINEERS
ALBUQUERQUE, NEW MEXICO

RIO GRANDE WATERSHED — RIO GRANDE, NEW MEXICO
ALBUQUERQUE DIVERSION CHANNELS
ALBUQUERQUE, NEW MEXICO

SOUTH DIVERSION CHANNEL
PHASE II

TYPICAL CHANNEL SECTIONS (RIPRAP)

DESIGNED BY: CBA
DRAWN BY: CL - DAG
CHECKED BY: WMJ
SUBMITTED BY: James D. Goodwin, PROJECT ENGINEER
DATE: APR 26 1971

DACW47-71-B-0011
FILE NUMBER RGR-AL-0-6.1
PLATE 6

DRAWING OF WORK AS CONSTRUCTED

FILE COPY - RETURN TO LIBRARY

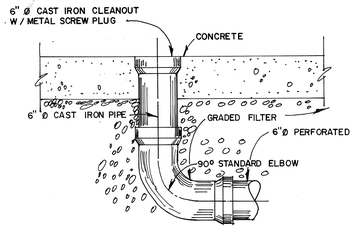

SIDE VIEW DETAIL

NOT TO SCALE

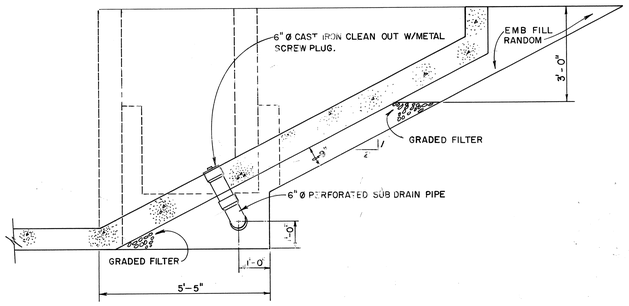

TYPICAL END VIEW FOR FLARED INLET

NOT TO SCALE

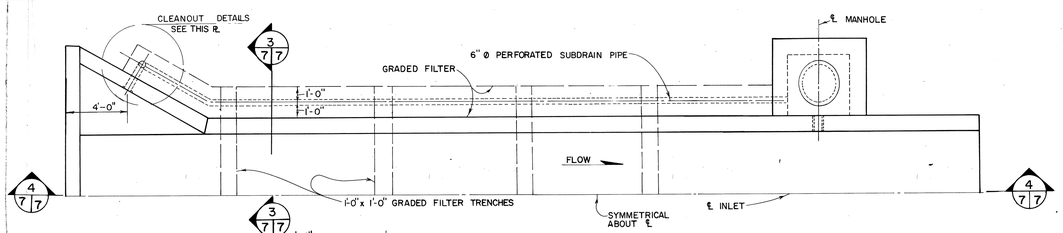

INLET STRUCTURES IN ROCK LINED CHANNEL

TYPICAL DRAIN PLAN

SCALE: 1" = 4'-0"

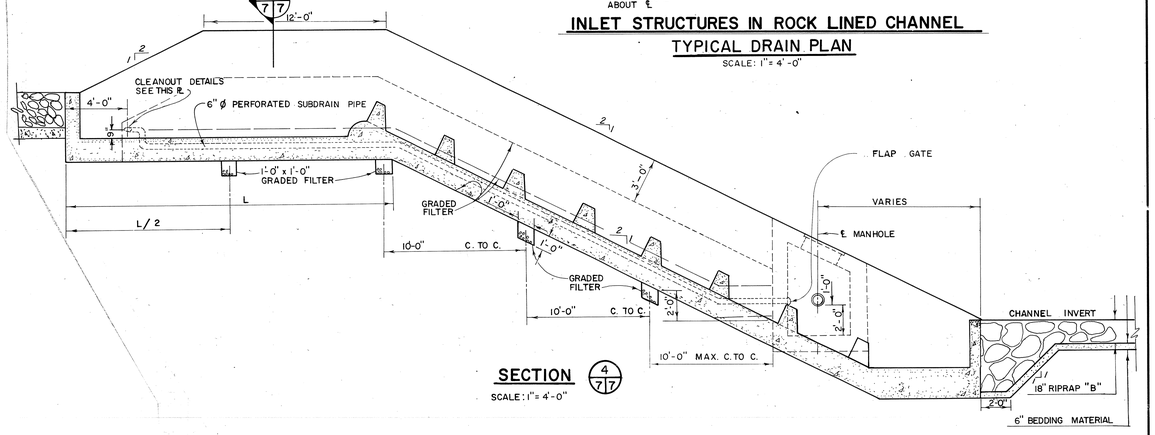

SECTION 4/7/7

SCALE: 1" = 4'-0"

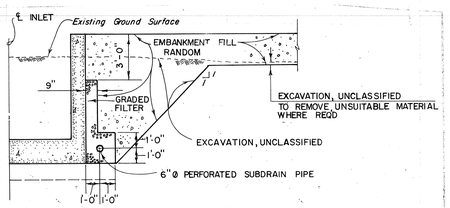

SECTION 3/7/7

SCALE: 1" = 4'-0"

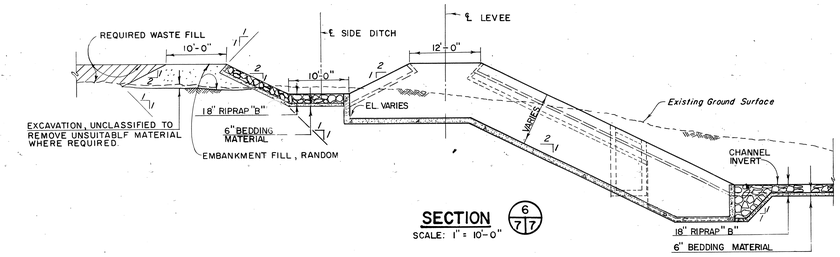

SECTION 6/7/7

SCALE: 1" = 10'-0"

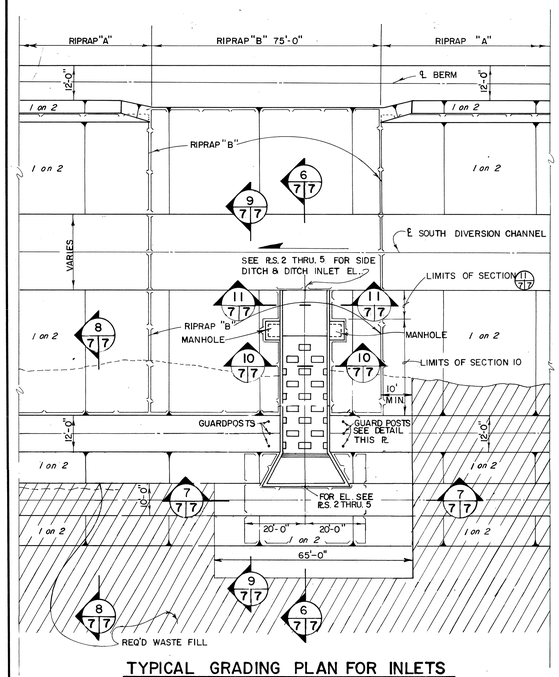

TYPICAL GRADING PLAN FOR INLETS

SCALE: 1" = 20'-0"

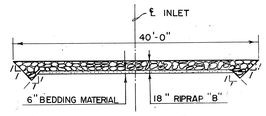

SECTION 7/7/7

SCALE: 1" = 10'-0"

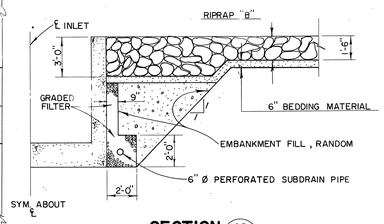

SECTION 10/7/7

SCALE: 1" = 4'-0"

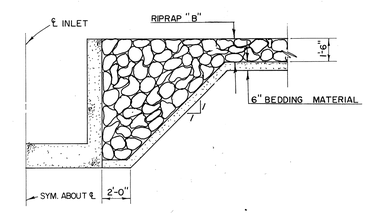

SECTION 11/7/7

SCALE: 1" = 4'-0"

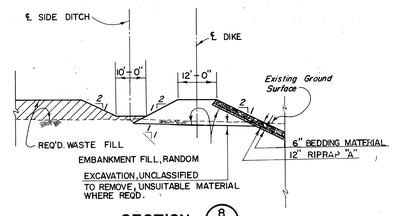

SECTION 8/7/7

SCALE: 1" = 20'-0"

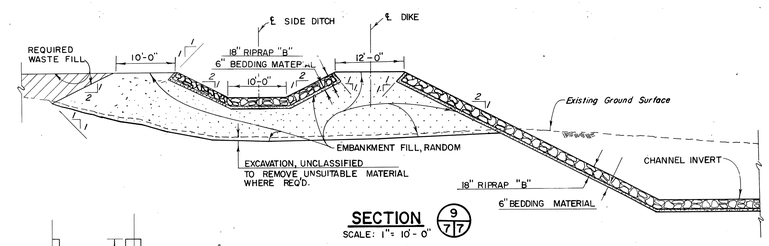

SECTION 9/7/7

SCALE: 1" = 10'-0"

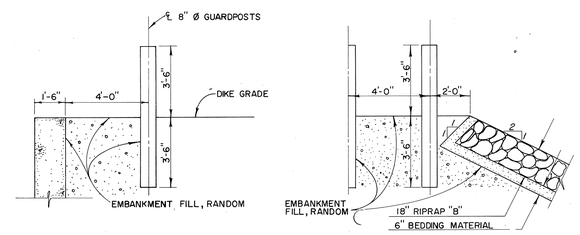

TYPICAL GUARDPOST DETAIL

SCALE: 1" = 3'-0"

GRAPHIC SCALES

1" = 4'-0" 0 1' 2' 3' 4' 8' 12'
1" = 10' 0 5' 10' 20' 30'
1" = 20' 0 10' 20' 40' 60'
1" = 3'-0" 0 1' 2' 3' 6' 9'

NOTE: ALL OPERATIONS PERFORMED IN ACCOMPLISHING THIS WORK SHALL BE DONE IN ACCORDANCE WITH THE APPLICABLE PROVISIONS OF THE CORPS OF ENGINEERS MANUAL "GENERAL SAFETY REQUIREMENTS" AND THE CONTRACT SPECIFICATIONS.

SYMBOL	DESCRIPTIONS	DATE	APPROVAL

REVISIONS

US ARMY ENGINEER DISTRICT, ALBUQUERQUE
CORPS OF ENGINEERS
ALBUQUERQUE, NEW MEXICO

RIO GRANDE WATERSHED — RIO GRANDE, NEW MEXICO
ALBUQUERQUE DIVERSION CHANNELS
ALBUQUERQUE, NEW MEXICO
SOUTH DIVERSION CHANNEL
PHASE II

INLET STRUCTURES GRADING AND DETAILS

DESIGNED BY: C.B.A.
DRAWN BY: L.R.H., D.A.G.
CHECKED BY: W.M.J.
SUBMITTED BY: PROJECT ENGINEER
DATE: APR 26 1971
DACW47-71-B-0011
FILE NUMBER RGR-AL-0-7
PLATE 7

DRAWING OF WORK AS CONSTRUCTED

FILE COPY - RETURN TO LIBRARY

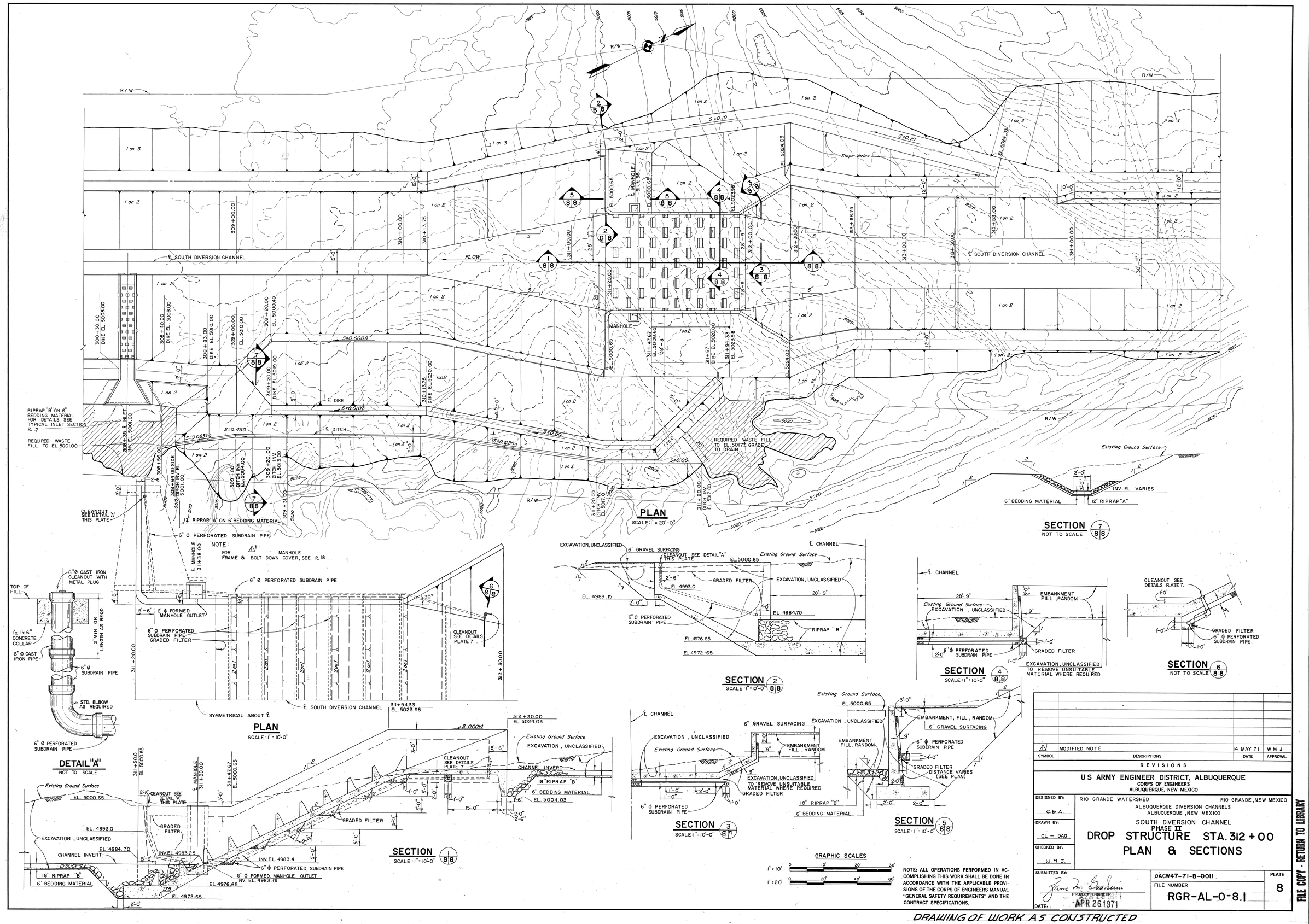

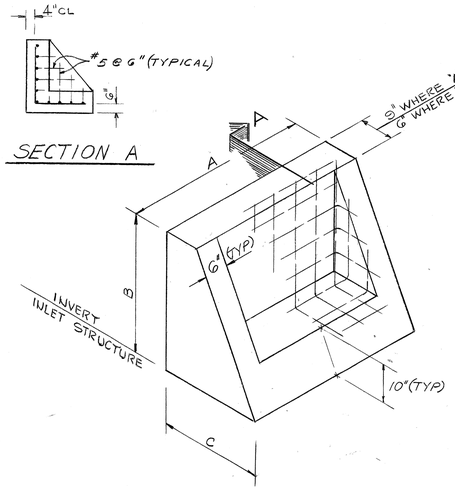

TYPICAL SHAPE
OPTIONAL BAFFLE BLOCK
INLET STRUCTURES
NO SCALE

NOTES:
1. SEE INLET STRUCTURES FOR DIMENSIONS A, B, & C.
2. ALL ANCHOR BOLTS $\frac{3}{4}$" ϕ REDHED SELF DRILLING (OR EQUAL)
3. BAFFLE REINF #5@6 EW.

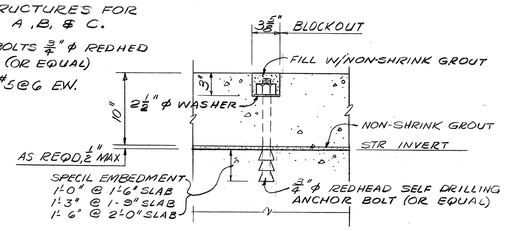

ANCHOR BLOCKOUT DETAIL

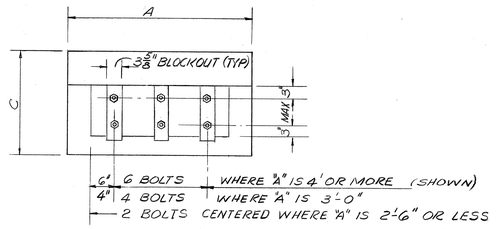

PLAN - BAFFLE BLOCK

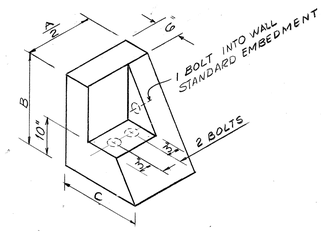

A = 3'-0"

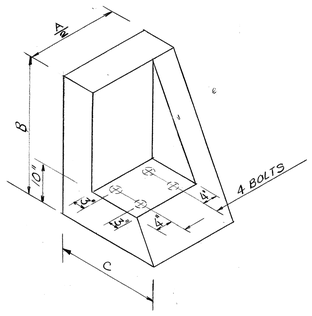

A = 4'-0" OR OVER

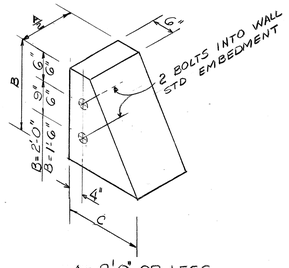

A = 2'-0" OR LESS

TYPICAL SHAPES
OPTIONAL BAFFLE BLOCKS AGAINST WALL
NO SCALE

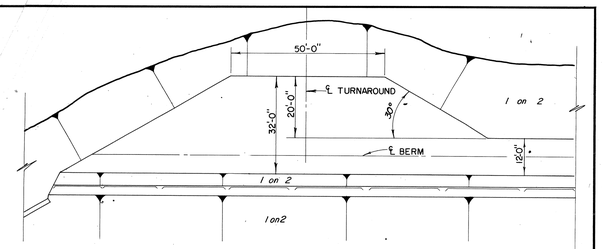

TURNAROUND
SCALE: 1" = 20'-0"

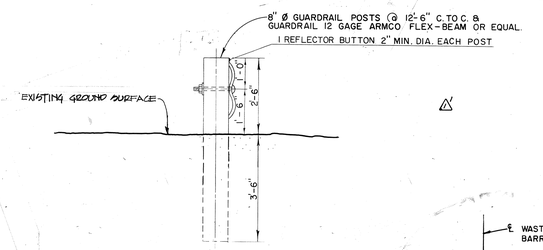

GUARDRAIL DETAIL
SCALE: 1" = 2'-0"

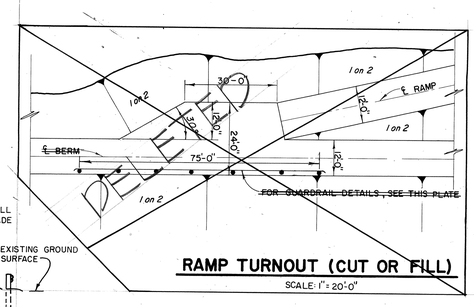

RAMP TURNOUT (CUT OR FILL)
SCALE: 1" = 20'-0"

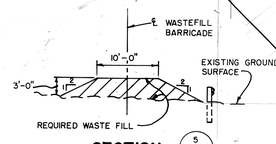

SECTION

NOTE:
GUARDRAILS & WASTEFILL BARRICADES TO BE BUILT PRIOR TO EXCAVATION IN THE IMMEDIATE AREA.

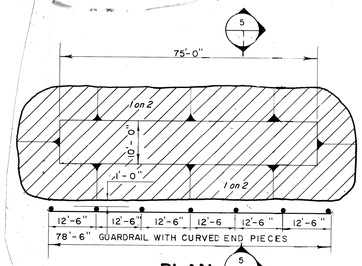

PLAN
GUARDRAIL & WASTEFILL BARRICADE
NOT TO SCALE

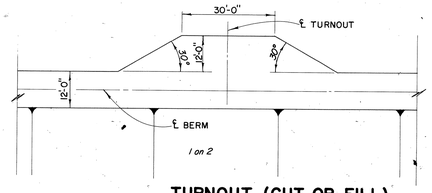

TURNOUT (CUT OR FILL)
SCALE: 1" = 20'-0"

TYPICAL TURNOUT, RAMP & TURNAROUND DETAILS
FOR LOCATION SEE PLATES 2 THRU 5

GRAPHIC SCALES
1" = 10' 0 10' 20' 30'
1" = 20' 0 20' 40' 60'
1" = 2' 0 1' 2' 4' 6'

NOTE: ALL OPERATIONS PERFORMED IN ACCOMPLISHING THIS WORK SHALL BE DONE IN ACCORDANCE WITH THE APPLICABLE PROVISIONS OF THE CORPS OF ENGINEERS MANUAL "GENERAL SAFETY REQUIREMENTS" AND THE CONTRACT SPECIFICATIONS.

SYMBOL	DESCRIPTIONS	DATE	APPROVAL
2	DELETED RAMP TURNOUT & REVISED GUARDRAIL DETAIL	14 MAY 71	W.M.J.

REVISIONS

US ARMY ENGINEER DISTRICT, ALBUQUERQUE
CORPS OF ENGINEERS
ALBUQUERQUE, NEW MEXICO

DESIGNED BY: C.B.A.
DRAWN BY: BGS - DAG
CHECKED BY: W.M.J.

RIO GRANDE WATERSHED — RIO GRANDE, NEW MEXICO
ALBUQUERQUE DIVERSION CHANNELS
ALBUQUERQUE, NEW MEXICO
SOUTH DIVERSION CHANNEL
PHASE II

MISCELLANEOUS DETAILS

SUBMITTED BY: Jane M. Gribin
PROJECT ENGINEER
DATE: APR 26 1971

FILE NUMBER: DACW-47-71-B-0011
RGR-AL-0-9.1

PLATE 9

DRAWING OF WORK AS CONSTRUCTED

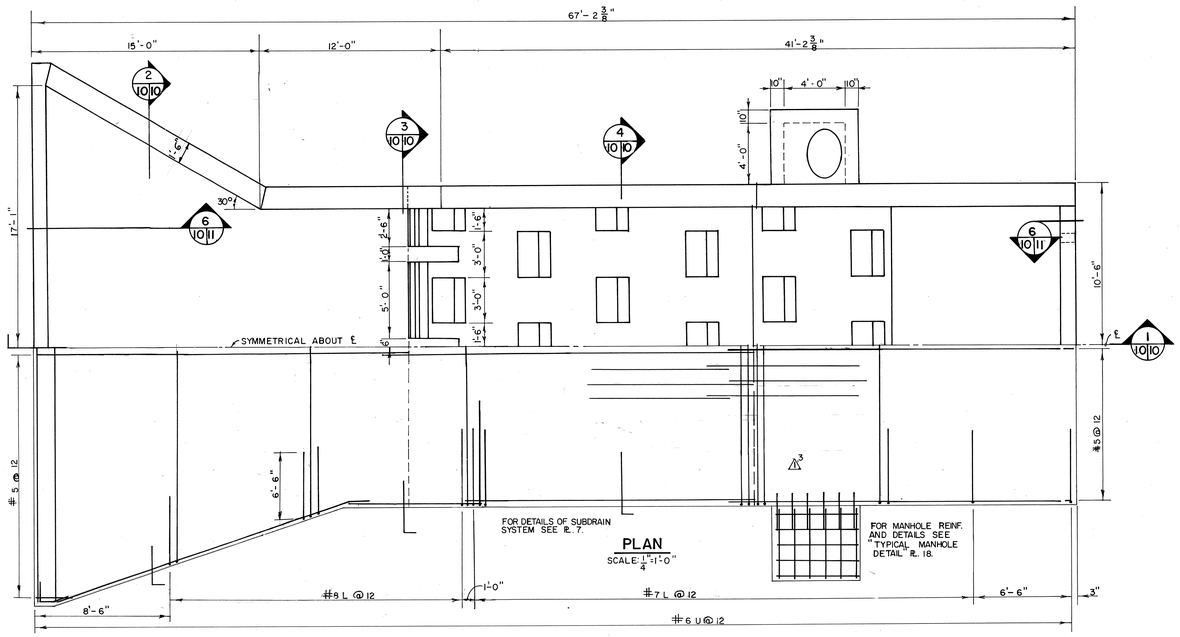

PLAN
SCALE: 1/4" = 1'-0"

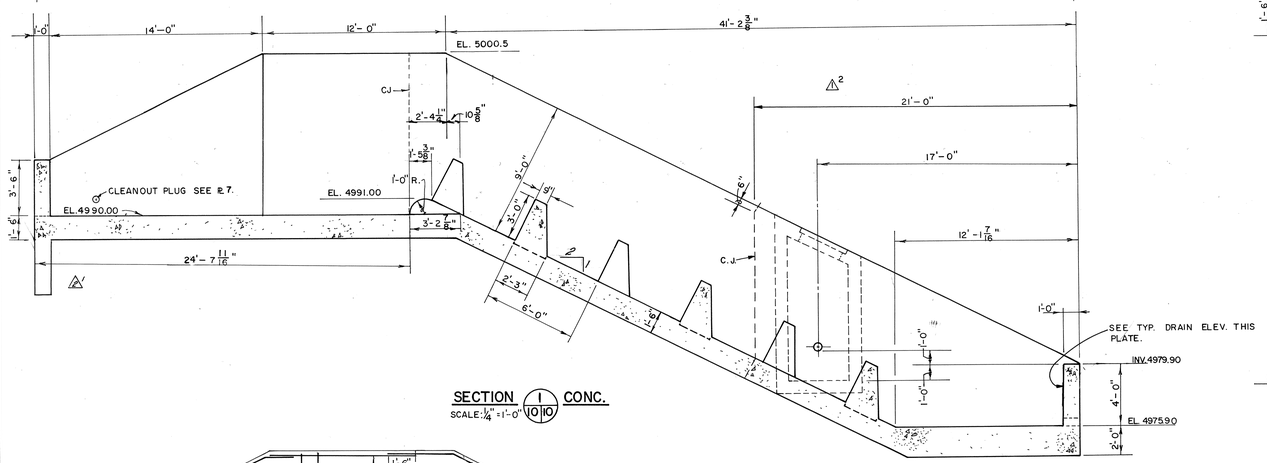

SECTION 1/10|10 CONC.
SCALE: 1/4" = 1'-0"

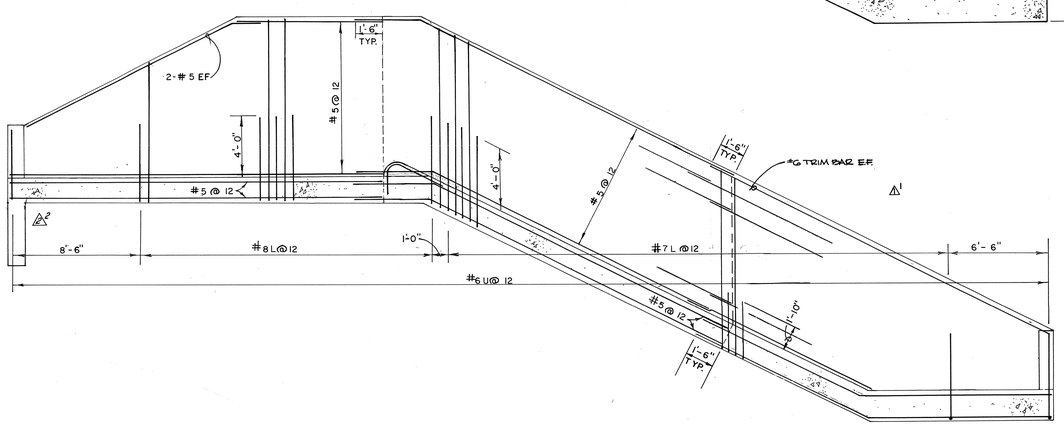

SECTION 1/10|10 REINF.
SCALE: 1/4" = 1'-0"

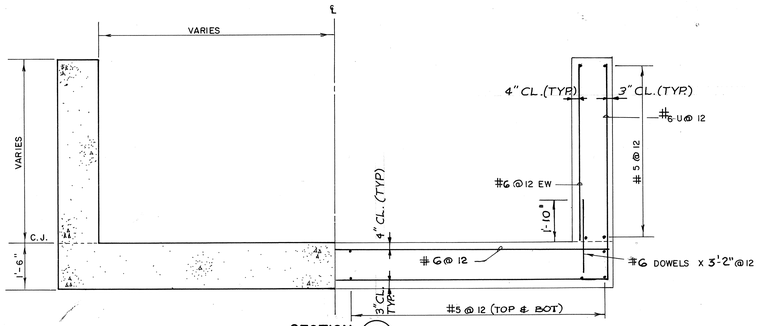

SECTION 2/10|10
SCALE: 3/8" = 1'-0"

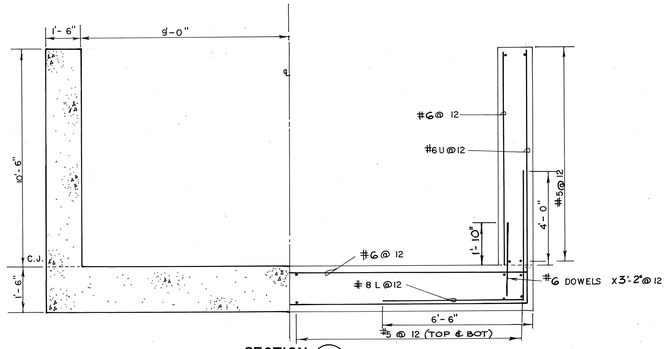

SECTION 3/10|10
SCALE: 3/8" = 1'-0"

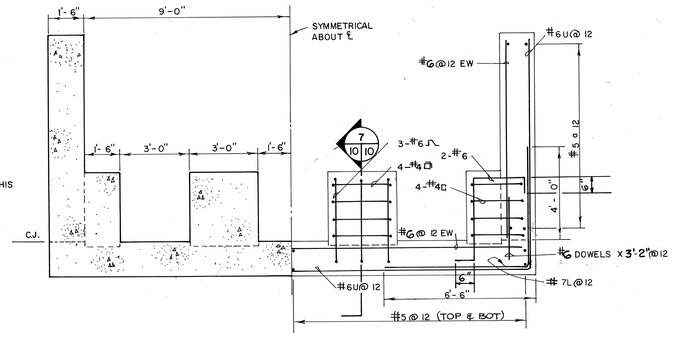

SECTION 4/10|10
SCALE: 3/8" = 1'-0"

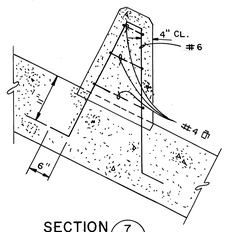

SECTION 7/10|10
SCALE: 3/4" = 1'-0"

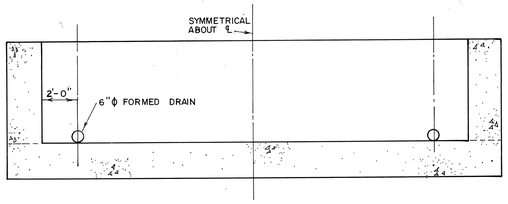

TYPICAL DRAIN ELEVATION
NO SCALE

GENERAL STRUCTURAL NOTES

1. ALL EXPOSED FORMED CONCRETE SURFACES WILL HAVE CLASS "B" FINISH UNLESS NOTED OTHERWISE
2. CLASS "B" FINISH WILL EXTEND 1'-0" BELOW FINISH GRADE OR TOP OF BACKFILL BELOW THIS LEVEL. CLASS "D" FINISH WILL BE USED.
3. A WOOD FLOAT FINISH WILL BE REQUIRED FOR ALL UNFORMED SURFACES.
4. ANY CHANGE IN CONSTRUCTION JOINTS FROM THAT INDICATED ON THE DRAWINGS MUST BE APPROVED BY THE CONTRACTING OFFICER.
5. EXPOSED EDGES OF CONCRETE BLOCKS WILL BE CHAMFERED 1 1/2". EDGES OF TOP OF CONCRETE WALLS WILL BE CHAMFERED 1 1/2". VERTICAL WALL CONTRACTION JOINTS WILL BE CHAMFERED 1/2" AND EXPOSED HORIZONTAL WALL CONSTRUCTION JOINTS WILL BE CHAMFERED 1/2".
6. TRANSVERSE JOINTS IN THE INVERT SLAB WILL BE REQUIRED AT THE END OF EACH CONTINUOUS POURING OPERATION, AS APPROVED BY THE CONTRACTING OFFICER, AND WILL BE FORMED CONSTRUCTION JOINTS WITH THE REINFORCEMENT CONTINUOUS THROUGH THE JOINT AS SHOWN ON THE DRAWINGS.
7. DIMENSION LINES SHOWN ON THE DRAWINGS WILL BE PAYMENT LINES FOR CONCRETE.
8. LAPS FOR REINFORCEMENT NOT INDICATED ON THE DRAWINGS SHALL BE IN ACCORDANCE WITH THE MANUAL OF STANDARD PRACTICE FOR DETAILING REINFORCED CONCRETE STRUCTURES (ACI 315-65).
9. BENT BARS SHALL CONFORM TO STANDARD HOOK DETAILS NOTED ON TABLE 2-1 OF ACI 315-65 UNLESS OTHERWISE NOTED.
10. SEE PLATE 9 FOR BAFFLE BLOCK OPTION.

GRAPHIC SCALES
1/4" = 1'-0"
3/8" = 1'-0"

NOTE: ALL OPERATIONS PERFORMED IN ACCOMPLISHING THIS WORK SHALL BE DONE IN ACCORDANCE WITH THE APPLICABLE PROVISIONS OF THE CORPS OF ENGINEERS MANUAL "GENERAL SAFETY REQUIREMENTS" AND THE CONTRACT SPECIFICATIONS.

SYMBOL	DESCRIPTIONS	DATE	APPROVAL
2	REVISED AS CONSTRUCTED	APR 73	AT
3	ADDED CONSTRUCTION JOINT	4 MAY 71	W.M.J.

REVISIONS

US ARMY ENGINEER DISTRICT, ALBUQUERQUE
CORPS OF ENGINEERS
ALBUQUERQUE, NEW MEXICO

DESIGNED BY: CJL
DRAWN BY: LRH, DAG
CHECKED BY: WHB

RIO GRANDE WATERSHED — RIO GRANDE, NEW MEXICO
ALBUQUERQUE DIVERSION CHANNELS
ALBUQUERQUE, NEW MEXICO
SOUTH DIVERSION CHANNEL
PHASE II
INLET STA. 289 + 00

SUBMITTED BY: John H. McCombs
CHIEF, STRUCTURAL SECTION
DATE: APR 26 1971

DACW 47-71-B-0011
FILE NUMBER
RGR-AL-0-10.2

PLATE 10

DRAWING OF WORK AS CONSTRUCTED

FILE COPY - RETURN TO LIBRARY

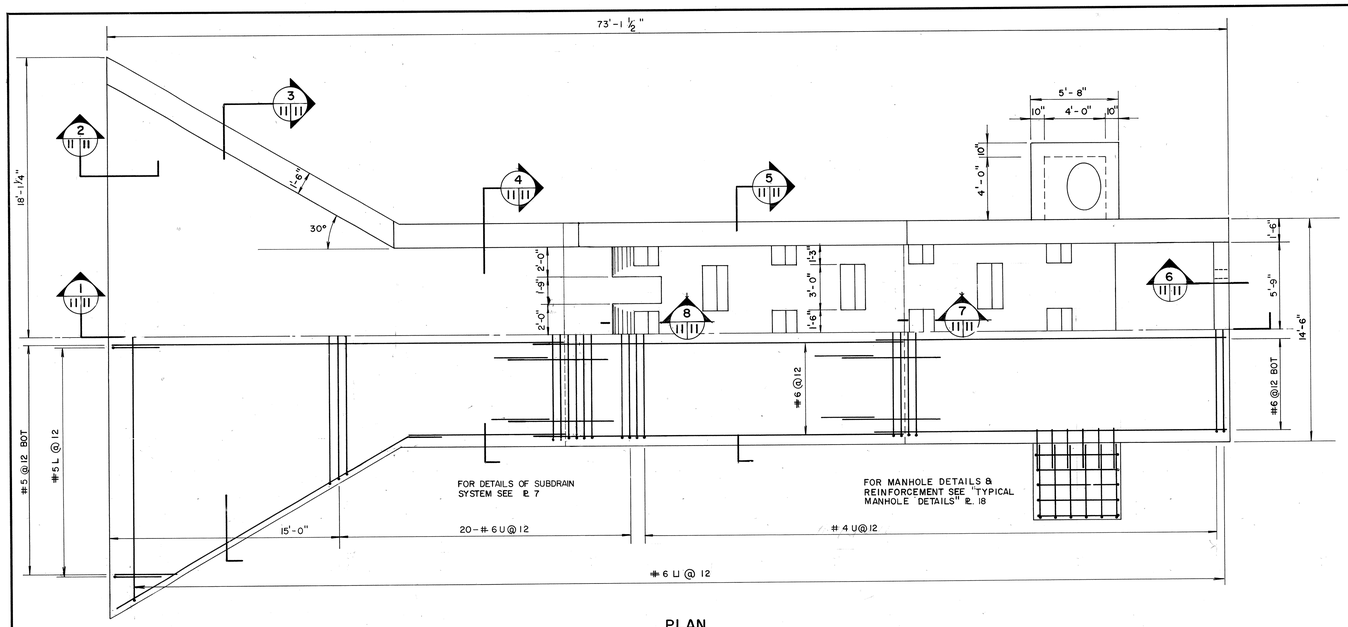

PLAN
SCALE: 1/4" = 1'-0"

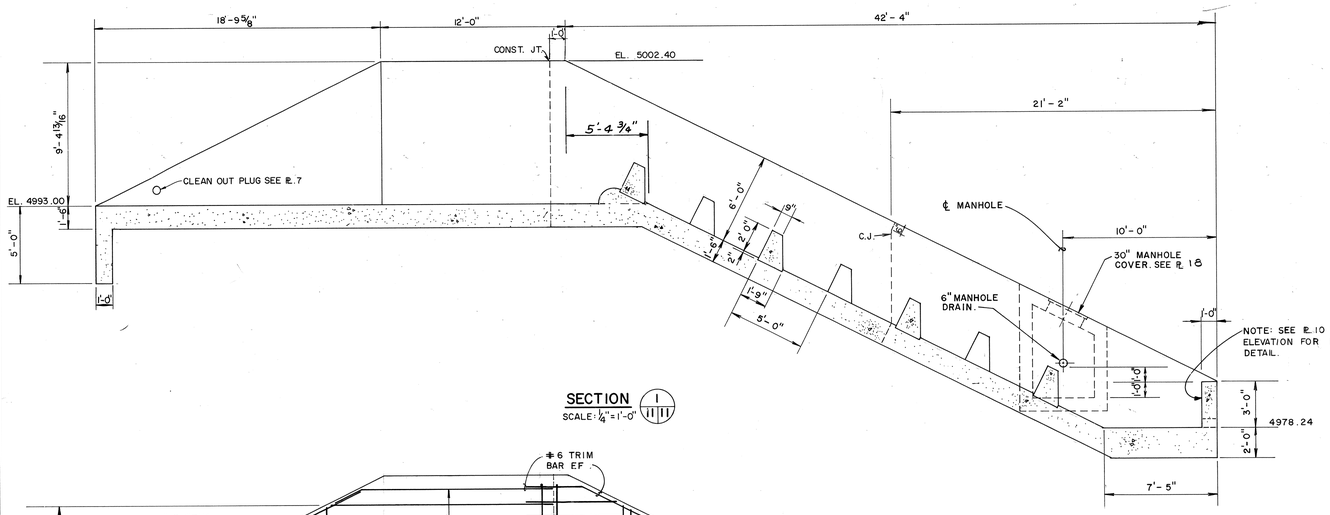

SECTION 1
SCALE: 1/4" = 1'-0"

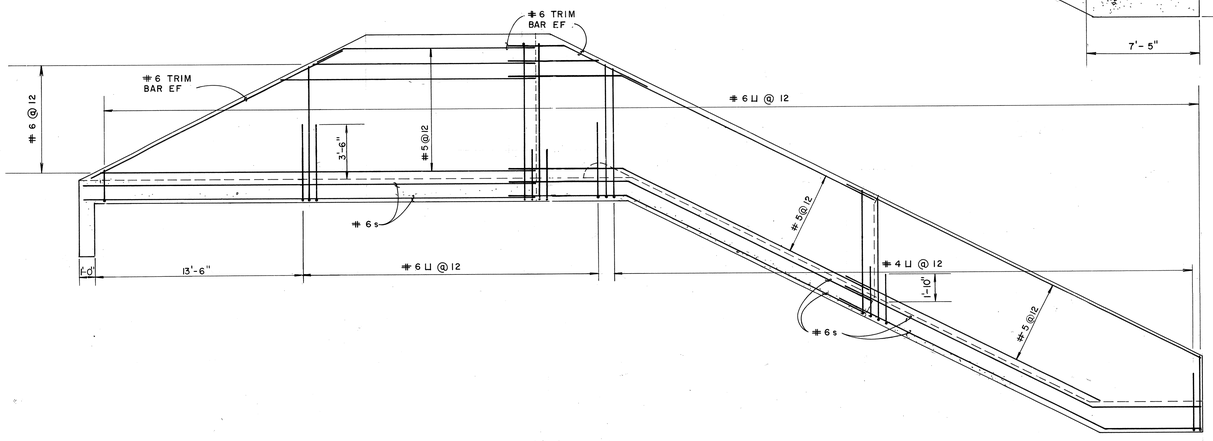

EXTERIOR ELEVATION REINFORCEMENT
SCALE: 1/4" = 1'-0"

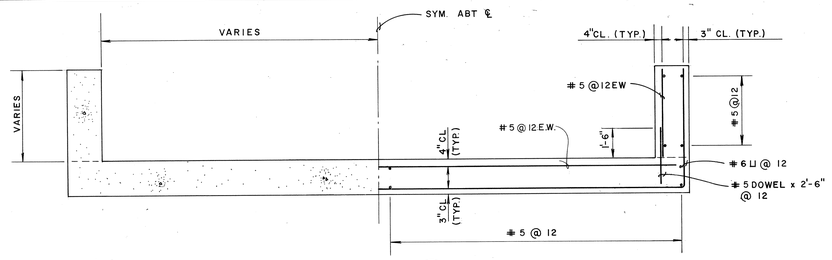

SECTION 3
SCALE: 3/8" = 1'-0"

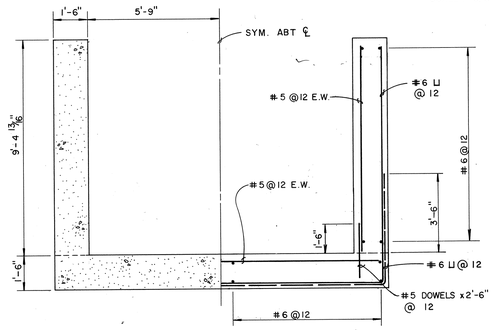

SECTION 4
SCALE: 3/8" = 1'-0"

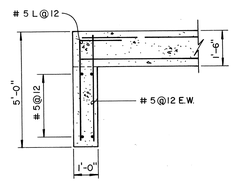

SECTION 2
SCALE: 3/8" = 1'-0"

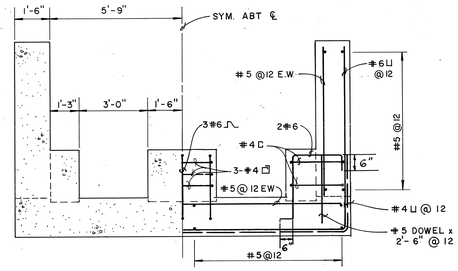

SECTION 5
SCALE: 3/8" = 1'-0"

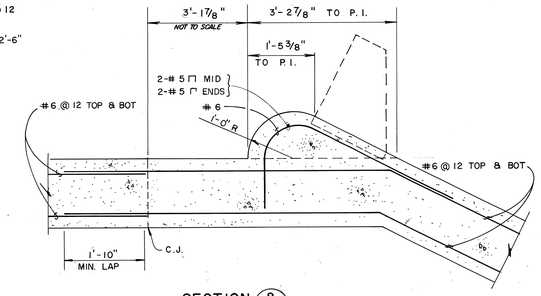

SECTION 8
SCALE: 3/4" = 1'-0"

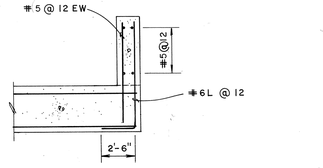

SECTION 6
SCALE: 3/8" = 1'-0"

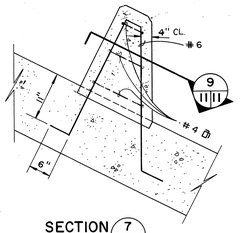

SECTION 7
SCALE: 3/4" = 1'-0"

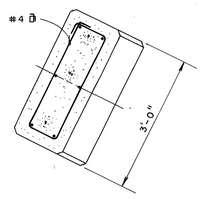

SECTION 9
SCALE: 3/4" = 1'-0"

SEE GENERAL STRUCTURAL NOTES R. 10.

GRAPHIC SCALES
1/4" = 1'-0"
3/8" = 1'-0"
3/4" = 1'-0"

NOTE: ALL OPERATIONS PERFORMED IN ACCOMPLISHING THIS WORK SHALL BE DONE IN ACCORDANCE WITH THE APPLICABLE PROVISIONS OF THE CORPS OF ENGINEERS MANUAL "GENERAL SAFETY REQUIREMENTS" AND THE CONTRACT SPECIFICATIONS.

SYMBOL	DESCRIPTIONS	DATE	APPROVAL

REVISIONS

US ARMY ENGINEER DISTRICT, ALBUQUERQUE
CORPS OF ENGINEERS
ALBUQUERQUE, NEW MEXICO

DESIGNED BY: JBR
DRAWN BY: L/T, M.H., P.M.
CHECKED BY: WHB
SUBMITTED BY: CHIEF, STRUCTURAL SECTION
DATE: APR 26 1971

RIO GRANDE WATERSHED — RIO GRANDE, NEW MEXICO
ALBUQUERQUE DIVERSION CHANNELS
ALBUQUERQUE, NEW MEXICO
SOUTH DIVERSION CHANNEL
PHASE II

INLET STA. 298 + 60

DACW 47-71-B-0011
FILE NUMBER RGR-AL-O-11
PLATE 11

DRAWING OF WORK AS CONSTRUCTED

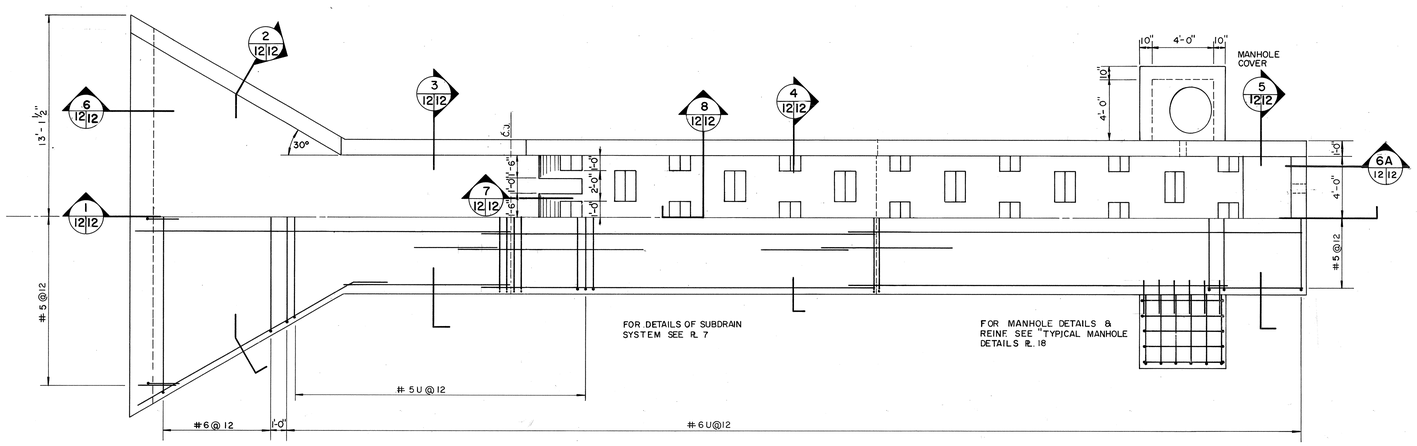

PLAN
SCALE: 1/4"=1'-0"

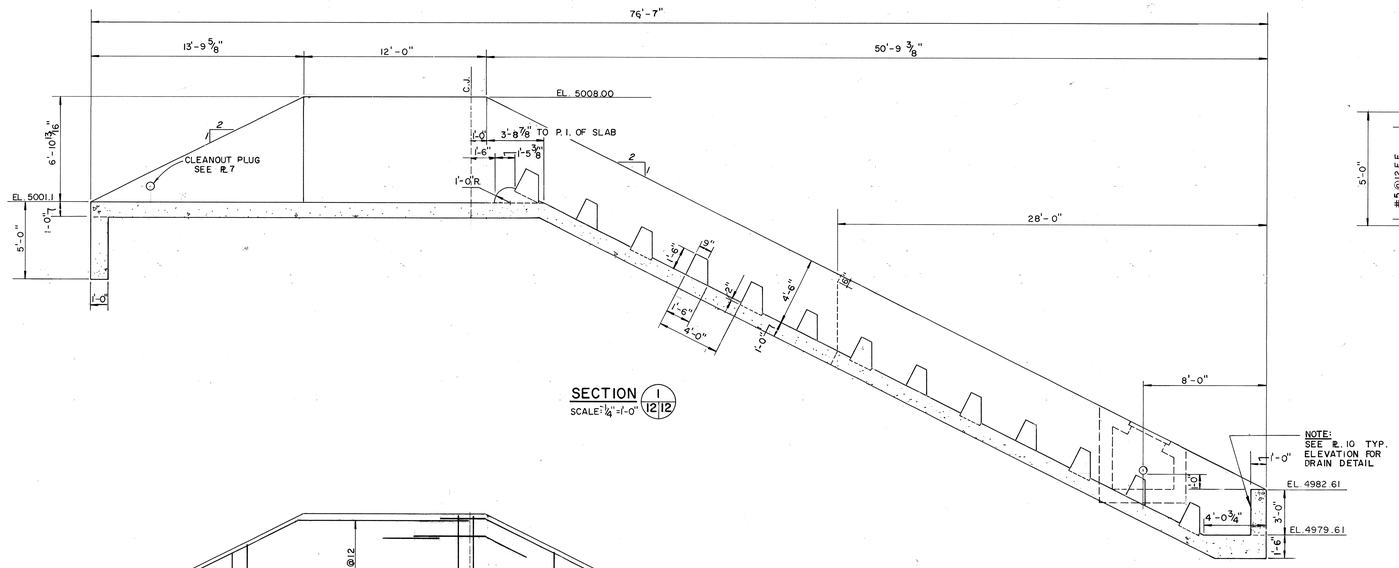

SECTION 1/12|12
SCALE: 1/4"=1'-0"

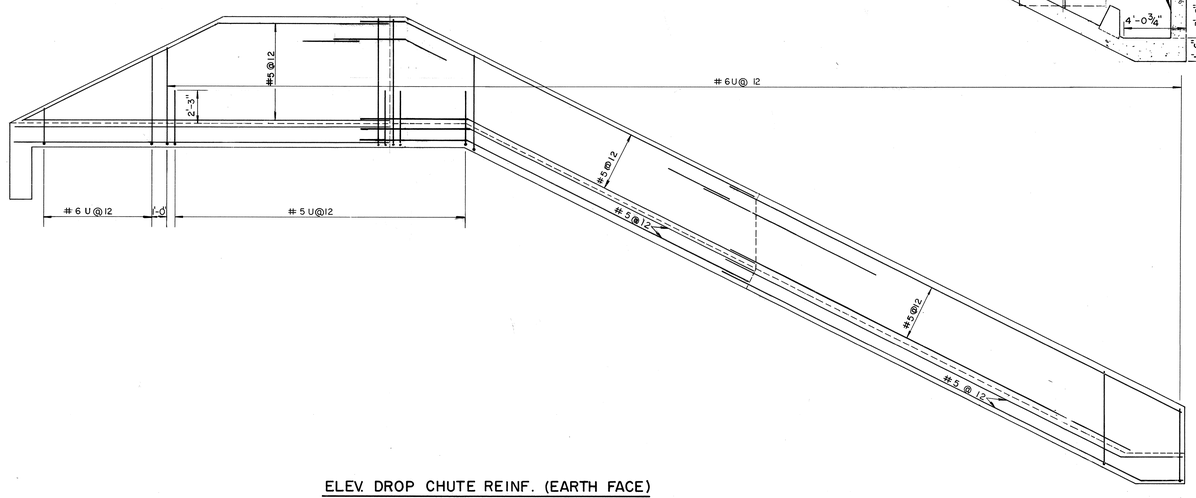

ELEV. DROP CHUTE REINF. (EARTH FACE)
SCALE: 1/4"=1'-0"

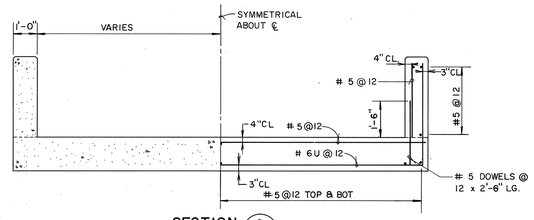

SECTION 2/12|12
SCALE: 3/8"=1'-0"

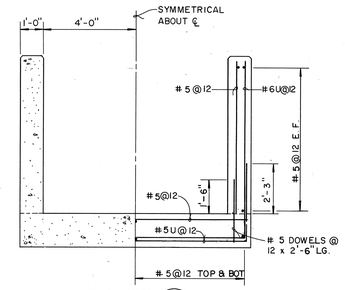

SECTION 3/12|12
SCALE: 3/8"=1'-0"

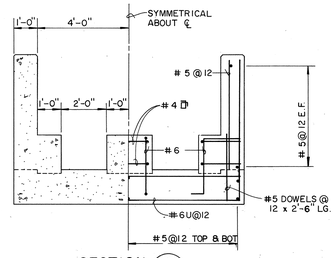

SECTION 4/12|12
SCALE: 3/8"=1'-0"

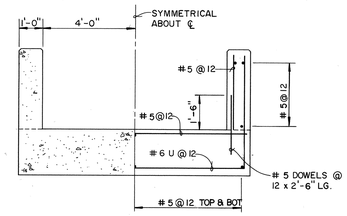

SECTION 5/12|12
SCALE: 3/8"=1'-0"

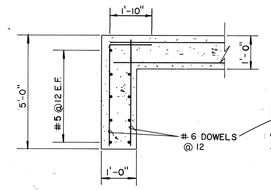

SECTION 6/12|12
SCALE: 3/8"=1'-0"

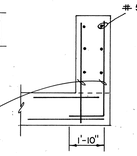

SECTION 6A/12|12
SCALE: 3/8"=1'-0"

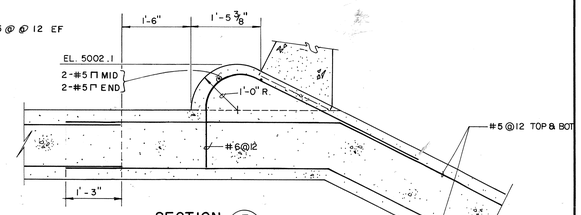

SECTION 7/12|12
SCALE: 3/4"=1'-0"

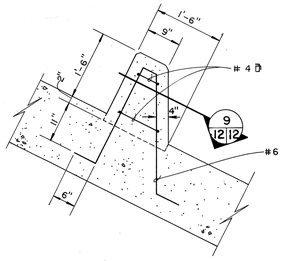

SECTION 8/12|12
SCALE: 3/4"=1'-0"

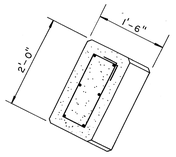

SECTION 9/12|12
SCALE: 3/4"=1'-0"

NOTE:
SEE GENERAL STRUCTURAL NOTES PLATE 10.

GRAPHIC SCALES

1/4"=1'-0" 0 1' 2' 4' 8' 12'
3/8"=1'-0" 0 1' 2' 4' 6' 8'
3/4"=1'-0" 0 1' 2' 3' 4'

NOTE: ALL OPERATIONS PERFORMED IN ACCOMPLISHING THIS WORK SHALL BE DONE IN ACCORDANCE WITH THE APPLICABLE PROVISIONS OF THE CORPS OF ENGINEERS MANUAL "GENERAL SAFETY REQUIREMENTS" AND THE CONTRACT SPECIFICATIONS.

SYMBOL	DESCRIPTIONS	DATE	APPROVAL

REVISIONS

US ARMY ENGINEER DISTRICT, ALBUQUERQUE
CORPS OF ENGINEERS
ALBUQUERQUE, NEW MEXICO

DESIGNED BY: JBR
DRAWN BY: M.H.
CHECKED BY: WHB

RIO GRANDE WATERSHED — RIO GRANDE, NEW MEXICO
ALBUQUERQUE DIVERSION CHANNELS
ALBUQUERQUE, NEW MEXICO
SOUTH DIVERSION CHANNEL
PHASE II

INLET STA. 308+35

SUBMITTED BY: John H. McCausland
CHIEF, STRUCTURAL SECTION
DATE: APR 26 1971

DACW 47-71-B 0011
FILE NUMBER
RGR-AL-0-12

PLATE 12

DRAWING OF WORK AS CONSTRUCTED

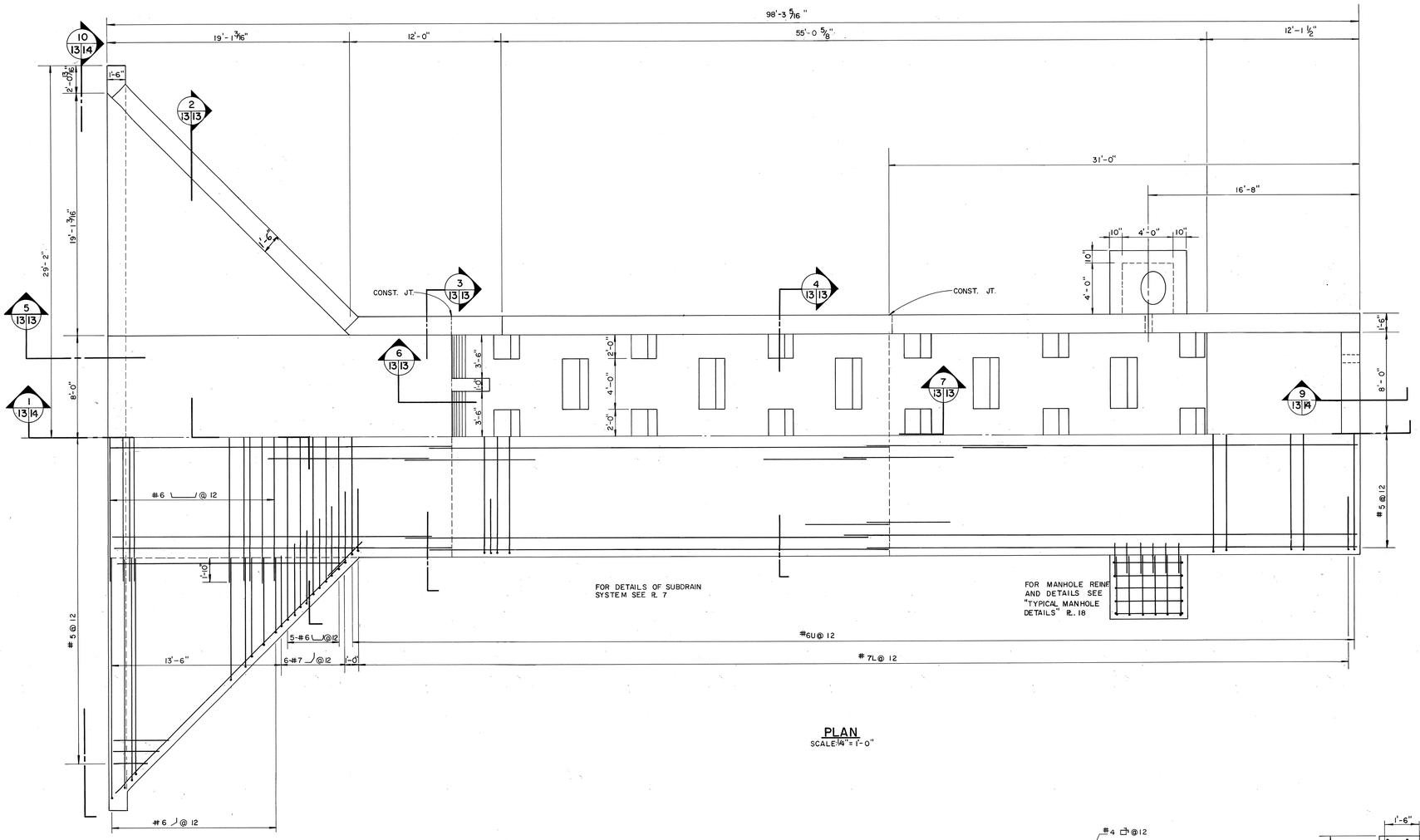

PLAN
SCALE: 1/4" = 1'-0"

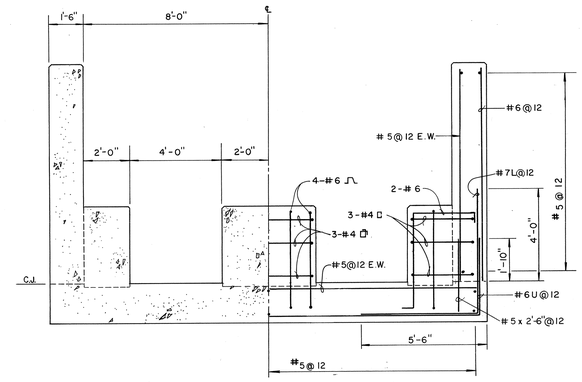

SECTION 4 (13|13)
SCALE: 3/8" = 1'-0"

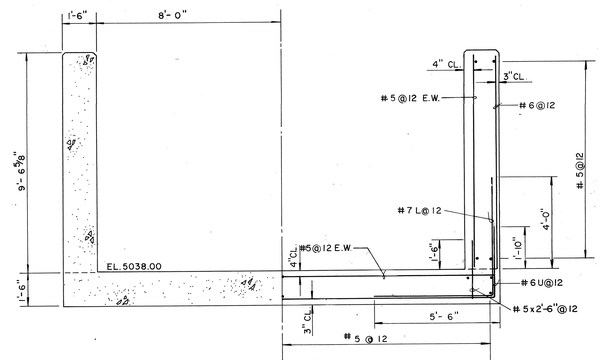

SECTION 3 (13|13)
SCALE: 3/8" = 1'-0"

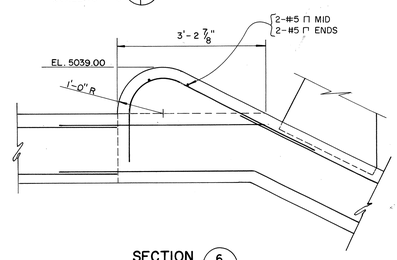

SECTION 6 (13|13)
SCALE: 3/4" = 1'-0"

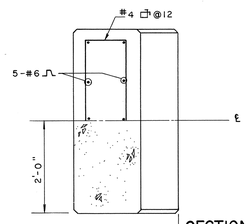

SECTION 8 (13|13)
SCALE: 3/4" = 1'-0"

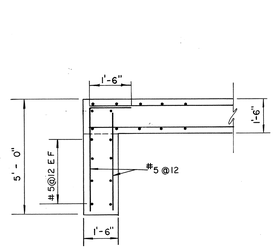

SECTION 5 (13|13)
SCALE: 3/8" = 1'-0"

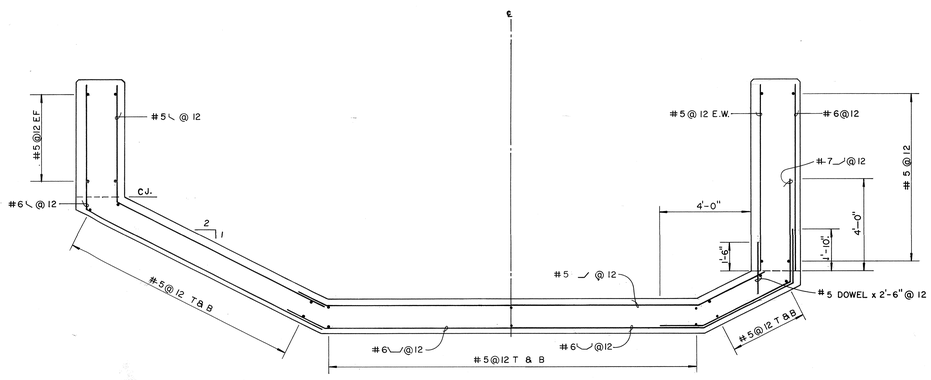

SECTION 2 (13|13)
SCALE: 3/8" = 1'-0"

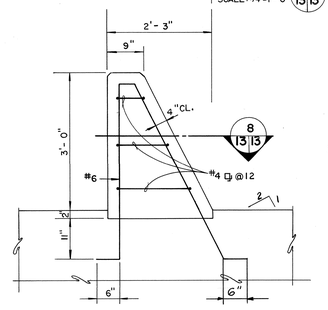

SECTION 7 (13|13)
SCALE: 3/4" = 1'-0"

SEE GENERAL STRUCTUAL NOTES PL. 10

GRAPHIC SCALES

1/4" = 1'-0" 0 2' 4' 8' 12'
3/8" = 1'-0" 0 1' 2' 4' 6' 8'
3/4" = 1'-0" 0 6" 1' 2' 3' 4'

NOTE: ALL OPERATIONS PERFORMED IN ACCOMPLISHING THIS WORK SHALL BE DONE IN ACCORDANCE WITH THE APPLICABLE PROVISIONS OF THE CORPS OF ENGINEERS MANUAL "GENERAL SAFETY REQUIREMENTS" AND THE CONTRACT SPECIFICATIONS.

SYMBOL	DESCRIPTIONS	DATE	APPROVAL

REVISIONS

US ARMY ENGINEER DISTRICT, ALBUQUERQUE
CORPS OF ENGINEERS
ALBUQUERQUE, NEW MEXICO

DESIGNED BY: CJL
DRAWN BY: M.H.
CHECKED BY: WHB

RIO GRANDE WATERSHED — RIO GRANDE, NEW MEXICO
ALBUQUERQUE DIVERSION CHANNELS
ALBUQUERQUE, NEW MEXICO
SOUTH DIVERSION CHANNEL
PHASE II

INLET STA. 324+75

SUBMITTED BY: John H McCausland
CHIEF, STRUCTURAL SECTION
DATE: APR 26 1971

FILE NUMBER: DACW 47-71-B-0011

PLATE: 13

RGR-AL-0-13

DRAWING OF WORK AS CONSTRUCTED

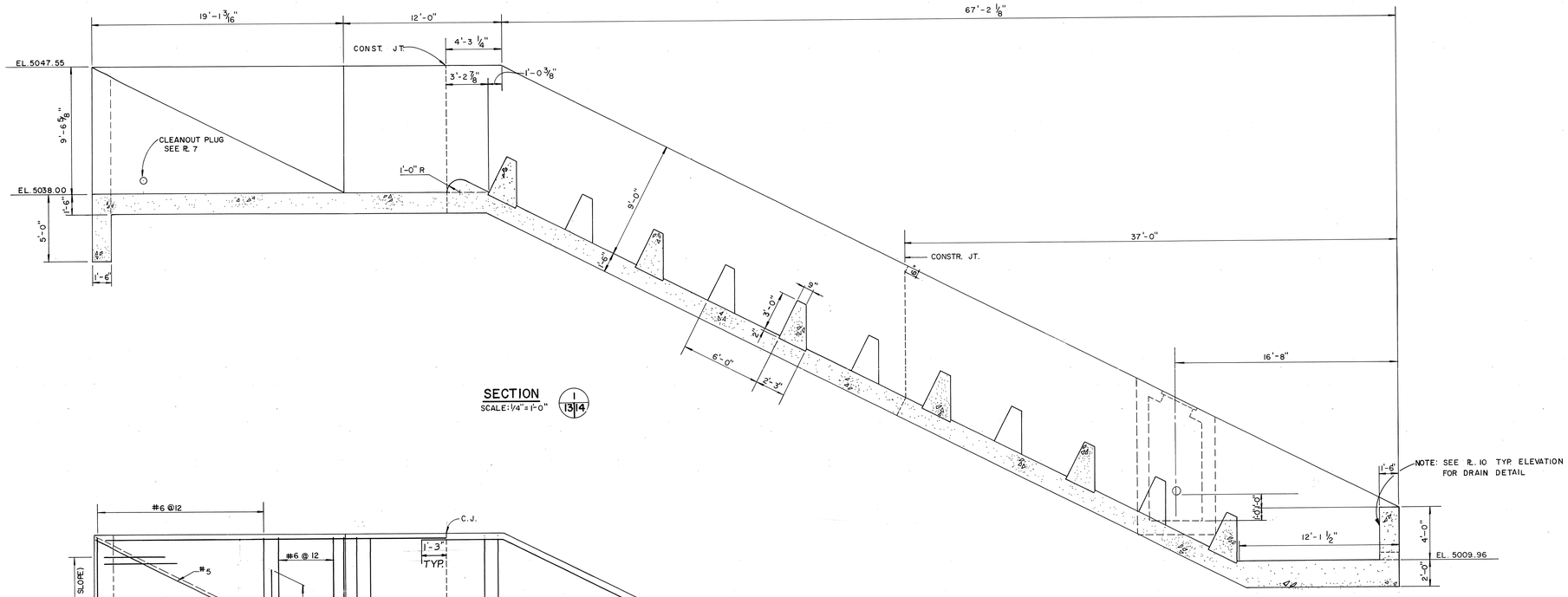

SECTION (1/13|14)
SCALE: 1/4" = 1'-0"

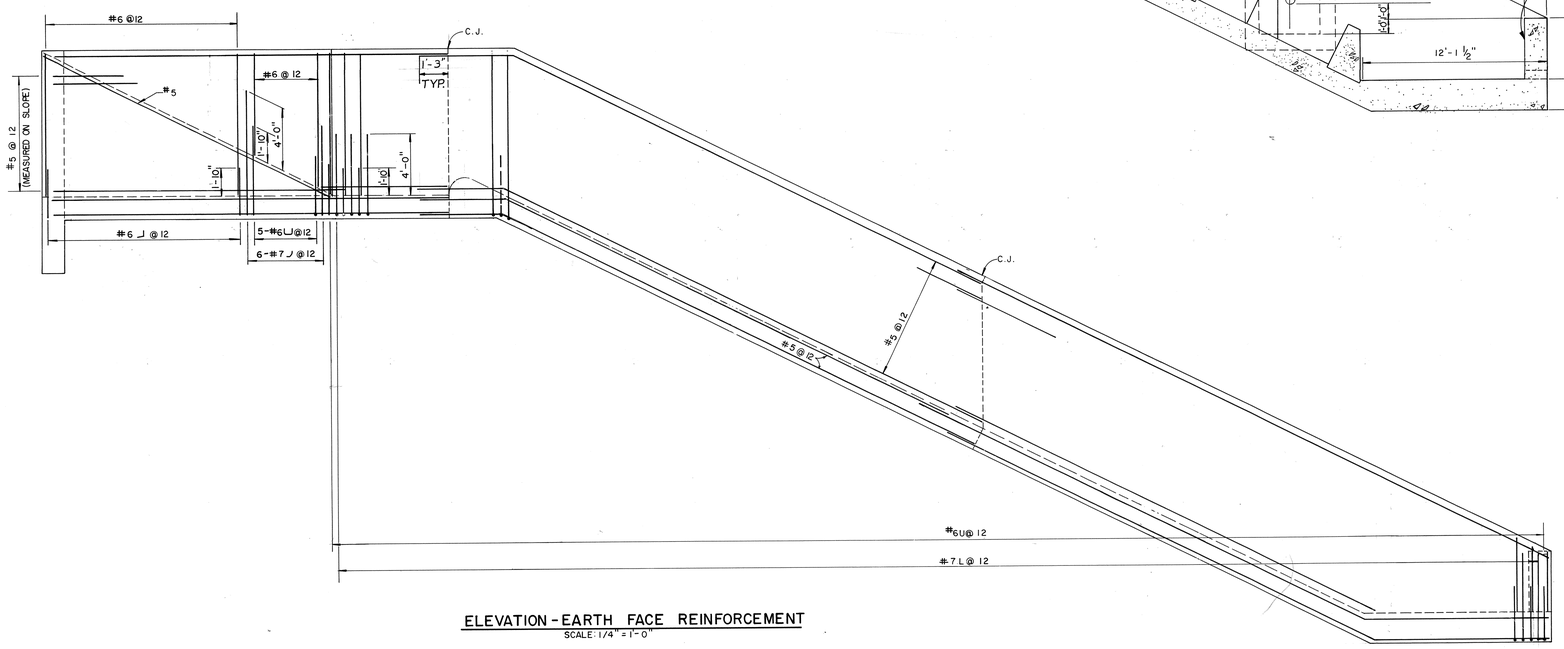

ELEVATION - EARTH FACE REINFORCEMENT
SCALE: 1/4" = 1'-0"

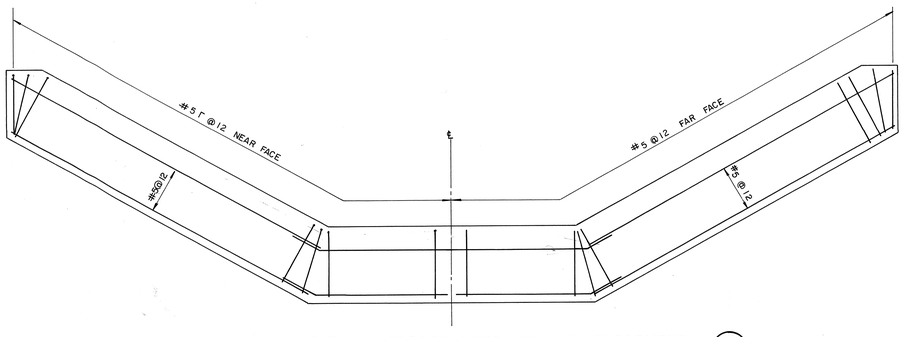

FRONT ELEV. - APPROCH WING TOE REINFORCEMENT (10/13|14)
SCALE: 1/4" = 1'-0"

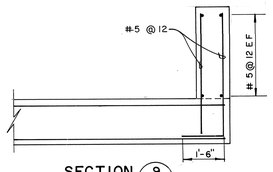

SECTION (9/13|14)
SCALE: 3/8" = 1'-0"

GRAPHIC SCALES
1/4" = 1'-0" 0 2' 4' 8' 12'
3/8" = 1'-0" 0 1' 2' 4' 6' 8'

NOTE: ALL OPERATIONS PERFORMED IN ACCOMPLISHING THIS WORK SHALL BE DONE IN ACCORDANCE WITH THE APPLICABLE PROVISIONS OF THE CORPS OF ENGINEERS MANUAL "GENERAL SAFETY REQUIREMENTS" AND THE CONTRACT SPECIFICATIONS.

SYMBOL	DESCRIPTIONS	DATE	APPROVAL

REVISIONS

US ARMY ENGINEER DISTRICT, ALBUQUERQUE
CORPS OF ENGINEERS
ALBUQUERQUE, NEW MEXICO

RIO GRANDE WATERSHED — RIO GRANDE, NEW MEXICO
ALBUQUERQUE DIVERSION CHANNELS
ALBUQUERQUE, NEW MEXICO
SOUTH DIVERSION CHANNEL
PHASE II
INLET STA.324+75

DESIGNED BY: CJL
DRAWN BY: MJH
CHECKED BY: WHB
SUBMITTED BY: CHIEF, STRUCTURAL SECTION
DATE: APR 26 1971

DACW 47-71-B-0011
FILE NUMBER RGR-AL-0-14
PLATE 14

DRAWING OF WORK AS CONSTRUCTED

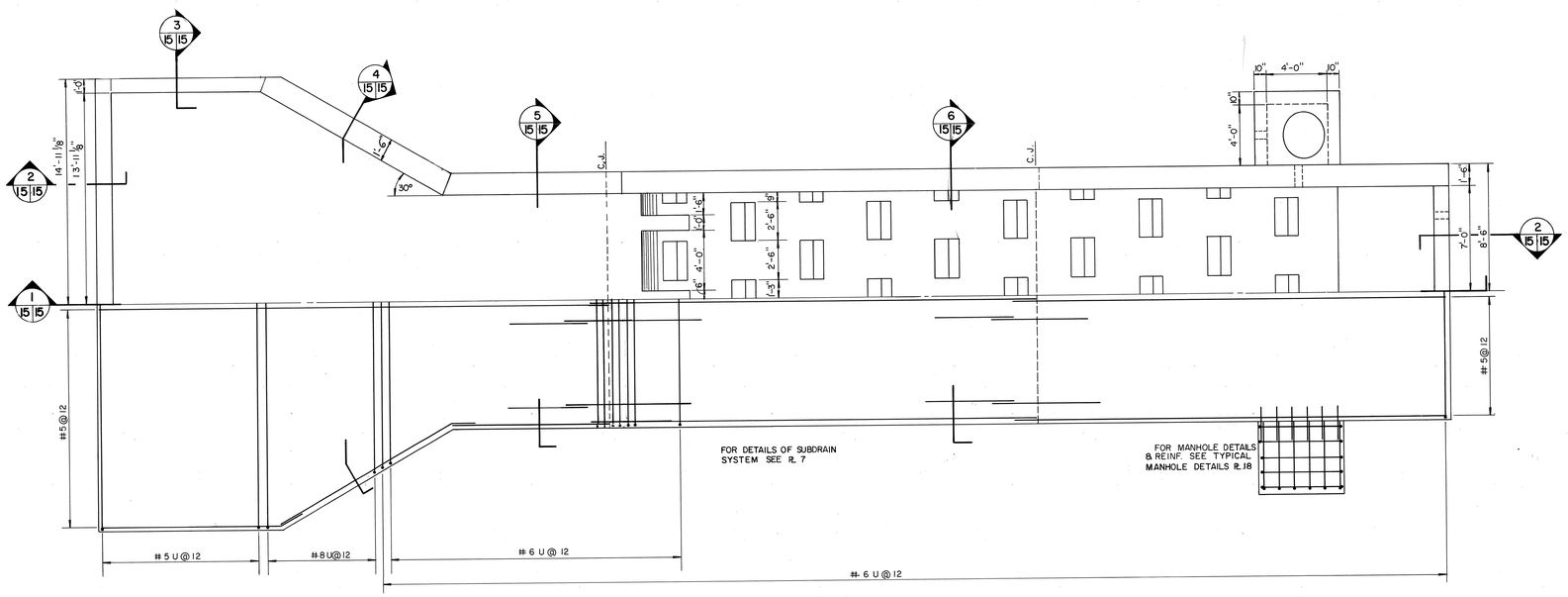

PLAN
SCALE: 1/4" = 1'-0"

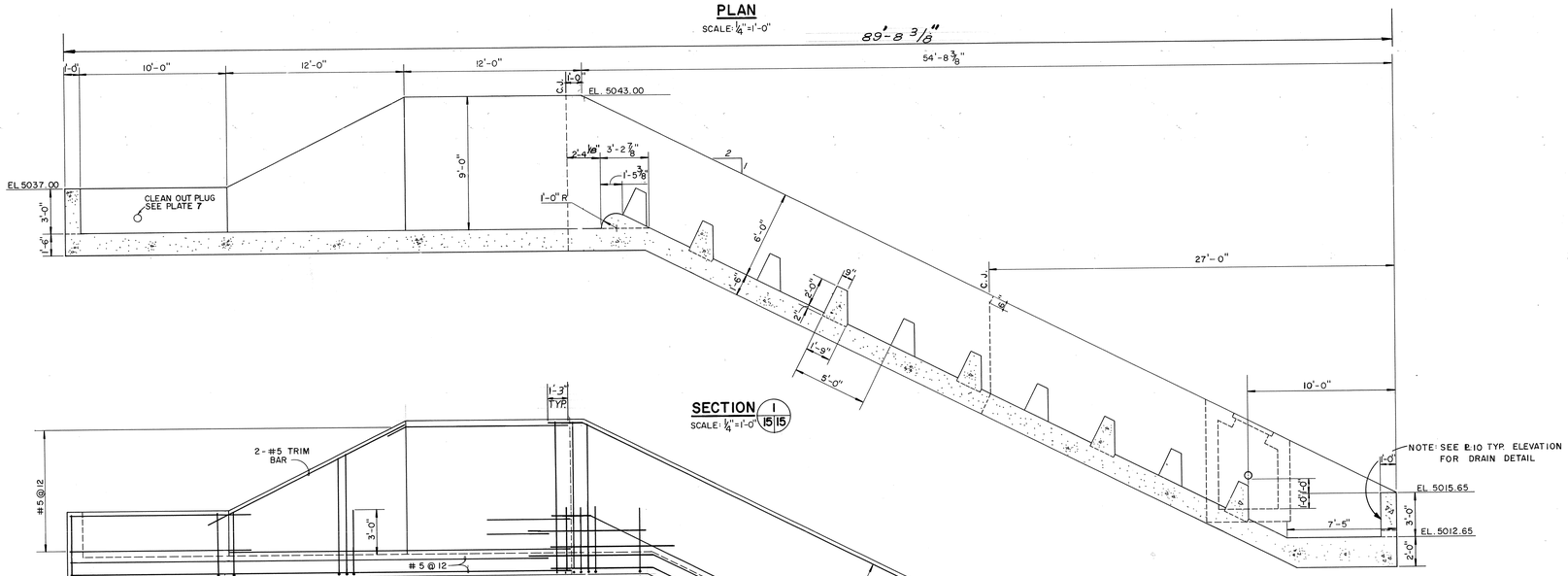

SECTION 1
SCALE: 1/4" = 1'-0" (15/15)

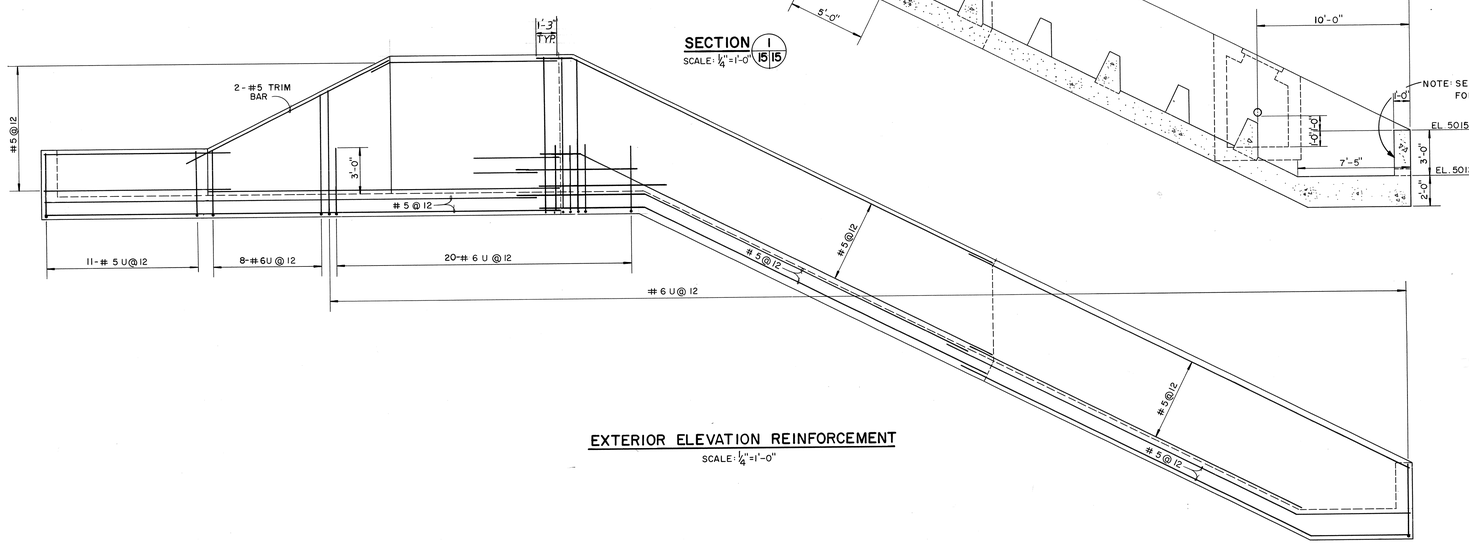

EXTERIOR ELEVATION REINFORCEMENT
SCALE: 1/4" = 1'-0"

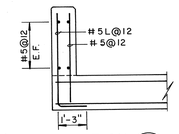

SECTION 2
SCALE: 3/8" = 1'-0" (15/15)

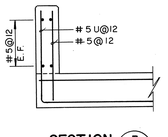

SECTION 3
SCALE: 3/8" = 1'-0" (15/15)

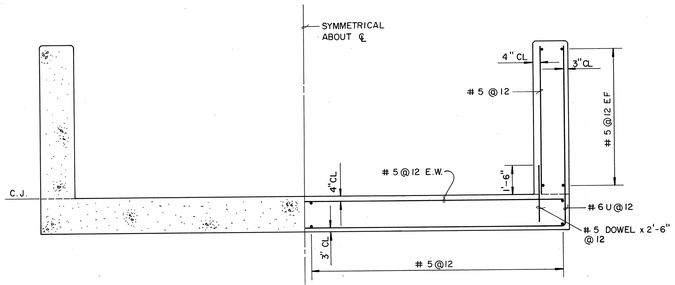

SECTION 4
SCALE: 3/8" = 1'-0" (15/15)

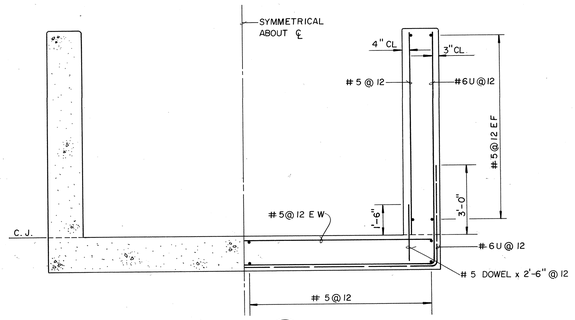

SECTION 5
SCALE: 3/8" = 1'-0" (15/15)

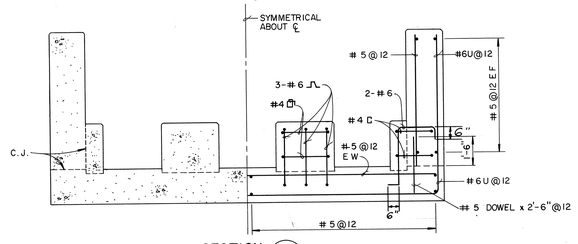

SECTION 6
SCALE: 3/8" = 1'-0" (15/15)

SEE GENERAL STRUCTURAL NOTES PL. 10

GRAPHIC SCALES

1/4" = 1'-0" 0 1' 2' 4' 8' 12'

3/8" = 1'-0" 0 1' 2' 4' 6' 8'

NOTE: ALL OPERATIONS PERFORMED IN ACCOMPLISHING THIS WORK SHALL BE DONE IN ACCORDANCE WITH THE APPLICABLE PROVISIONS OF THE CORPS OF ENGINEERS MANUAL "GENERAL SAFETY REQUIREMENTS" AND THE CONTRACT SPECIFICATIONS.

SYMBOL	DESCRIPTIONS	DATE	APPROVAL

REVISIONS

US ARMY ENGINEER DISTRICT, ALBUQUERQUE
CORPS OF ENGINEERS
ALBUQUERQUE, NEW MEXICO

RIO GRANDE WATERSHED — RIO GRANDE, NEW MEXICO

ALBUQUERQUE DIVERSION CHANNEL
ALBUQUERQUE, NEW MEXICO

SOUTH DIVERSION CHANNEL
PHASE II

INLET STA. 336 + 15

DESIGNED BY: CJL
DRAWN BY: RM MJL
CHECKED BY: WHB
SUBMITTED BY: John H. McCleveland, CHIEF, STRUCTURAL SECTION
DATE: APR 26 1971

DACW 47-71-B-0011
FILE NUMBER RGR-AL-0-15
PLATE 15

DRAWING OF WORK AS CONSTRUCTED

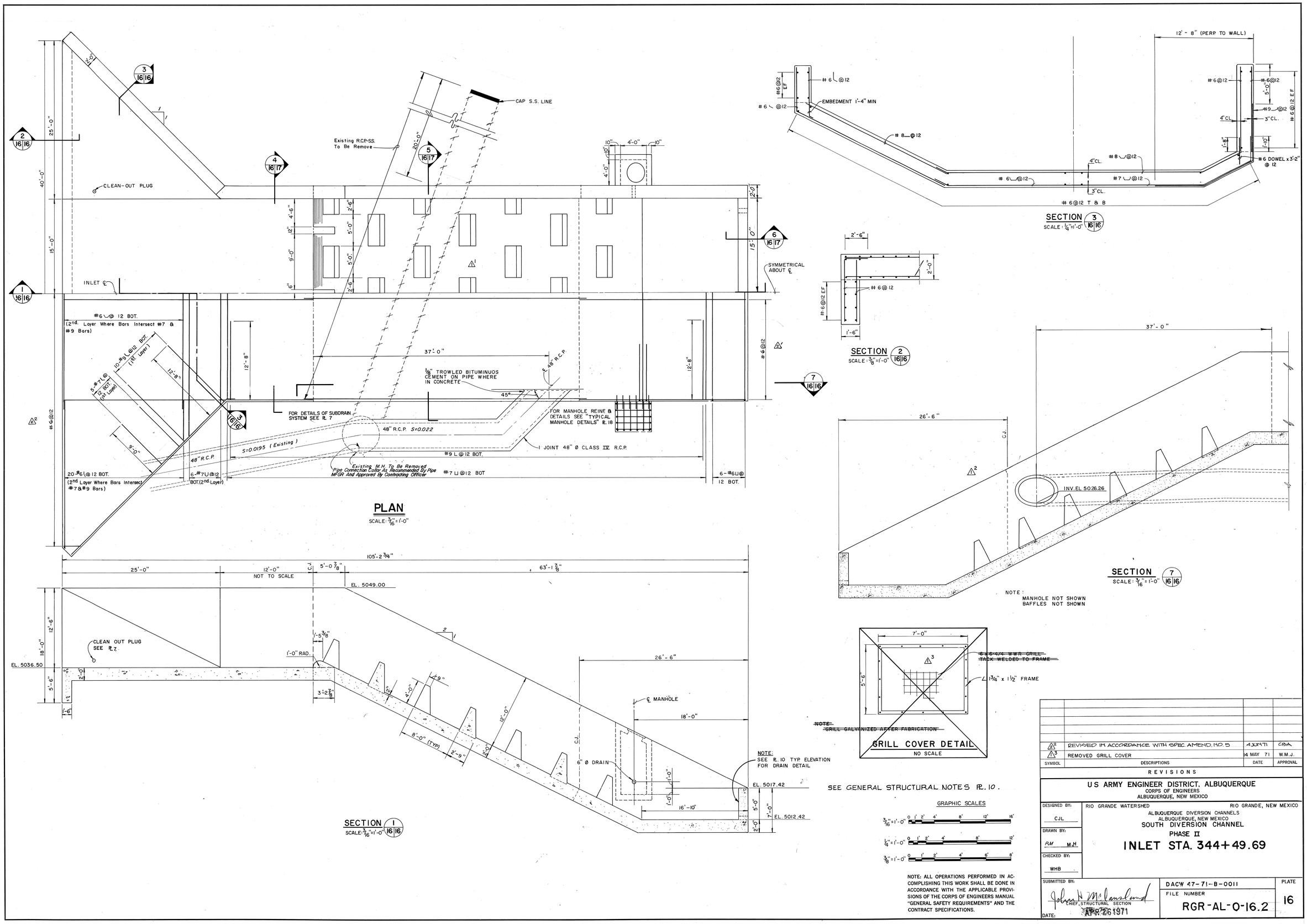
PLAN
SCALE: 3/16" = 1'-0"
CAP S.S. LINE
Existing R.C.P.-SS. To Be Remove
CLEAN-OUT PLUG
INLET ℄
SYMMETRICAL ABOUT ℄
FOR DETAILS OF SUBDRAIN SYSTEM SEE R. 7
FOR MANHOLE REINF. & DETAILS SEE "TYPICAL MANHOLE DETAILS" R. 18
1/8" TROWLED BITUMINUOS CEMENT ON PIPE WHERE IN CONCRETE
48" R.C.P. S=0.022
S=0.0195 (Existing)
1 JOINT 48" Ø CLASS IV R.C.P.
Existing M.H. To Be Removed Pipe Connection Collar As Recommended By Pipe MFGR And Approved By Contracting Officer
#9 L @ 12 BOT.
#7 U @ 12 BOT
#6 @ 12 BOT. (2nd. Layer Where Bars Intersect #7 & #9 Bars)
20-#6 @ 12 BOT. (2nd Layer Where Bars Intersect #7 & #9 Bars)
6-#7 U @ 12 BOT. (2nd Layer)
6-#6 U @ 12 BOT.
SECTION 1
SCALE: 3/16" = 1'-0"
105'-2 3/4"
25'-0"
12'-0" NOT TO SCALE
5'-0 7/8"
63'-1 7/8"
EL. 5049.00
EL. 5036.50
CLEAN OUT PLUG SEE R. 7
1'-0" RAD.
26'-6"
℄ MANHOLE
18'-0"
6" Ø DRAIN
NOTE: SEE R. 10 TYP ELEVATION FOR DRAIN DETAIL
EL. 5017.42
EL. 5012.42
16'-10"
8'-0" (TYP)
C.J.
SECTION 3
SCALE: 1/4" = 1'-0"
12'-8" (PERP TO WALL)
EMBEDMENT 1'-4" MIN
#6 DOWEL x 3'-2" @ 12
#6 @ 12 T & B
SECTION 2
SCALE: 3/8" = 1'-0"
SECTION 7
SCALE: 3/16" = 1'-0"
26'-6"
37'-0"
INV. EL 5026.26
NOTE: MANHOLE NOT SHOWN BAFFLES NOT SHOWN
GRILL COVER DETAIL
NO SCALE
7'-0"
5'-6"
1 3/4" x 1 1/2" FRAME
~~6-1/4" WWR GRILL TACK WELDED TO FRAME~~
~~NOTE: GRILL GALVANIZED AFTER FABRICATION~~
SEE GENERAL STRUCTURAL NOTES R. 10.
GRAPHIC SCALES
3/16" = 1'-0"
1/4" = 1'-0"
3/8" = 1'-0"
NOTE: ALL OPERATIONS PERFORMED IN ACCOMPLISHING THIS WORK SHALL BE DONE IN ACCORDANCE WITH THE APPLICABLE PROVISIONS OF THE CORPS OF ENGINEERS MANUAL "GENERAL SAFETY REQUIREMENTS" AND THE CONTRACT SPECIFICATIONS.
REVISED IN ACCORDANCE WITH SPEC. AMEND. NO 5 — 4 JUN 71 — CDA
REMOVED GRILL COVER — 4 MAY 71 — W.M.J.
SYMBOL — DESCRIPTIONS — DATE — APPROVAL
REVISIONS
US ARMY ENGINEER DISTRICT, ALBUQUERQUE
CORPS OF ENGINEERS
ALBUQUERQUE, NEW MEXICO
DESIGNED BY: CJL
DRAWN BY: RM M.H.
CHECKED BY: WHB
SUBMITTED BY: CHIEF, STRUCTURAL SECTION
DATE: APR 26 1971
RIO GRANDE WATERSHED — RIO GRANDE, NEW MEXICO
ALBUQUERQUE DIVERSION CHANNELS
ALBUQUERQUE, NEW MEXICO
SOUTH DIVERSION CHANNEL
PHASE II
INLET STA. 344+49.69
DACW 47-71-B-0011
FILE NUMBER RGR-AL-0-16.2
PLATE 16
DRAWING OF WORK AS CONSTRUCTED
FILE COPY - RETURN TO LIBRARY

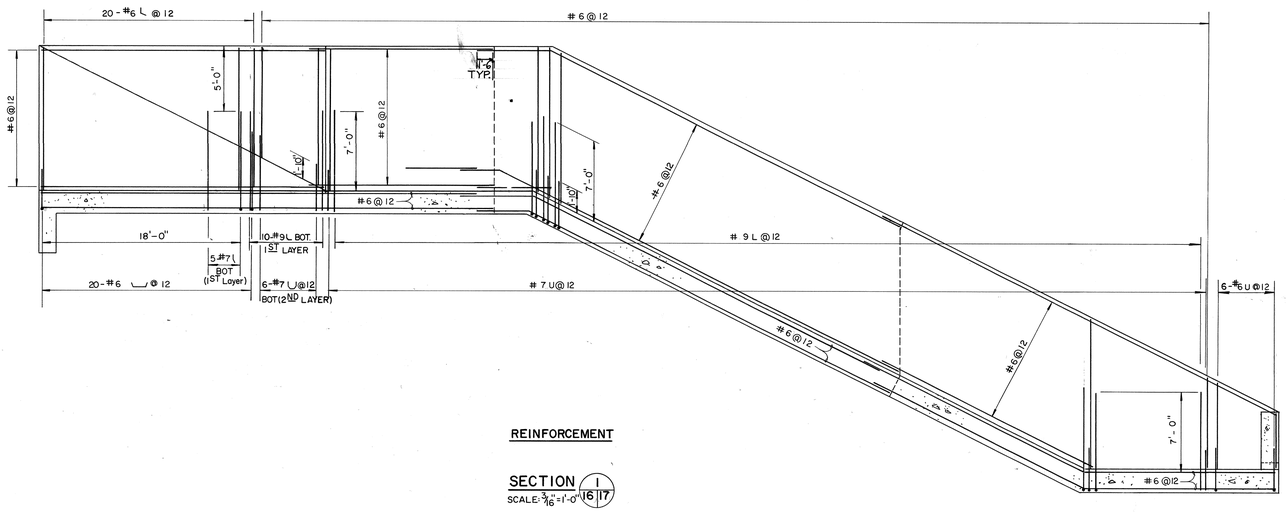

REINFORCEMENT

SECTION 1 (16|17)
SCALE: 3/16" = 1'-0"

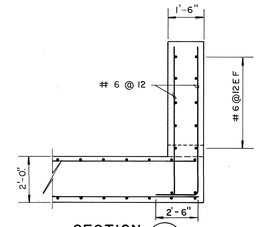

SECTION 6 (16|17)
SCALE: 3/8" = 1'-0"

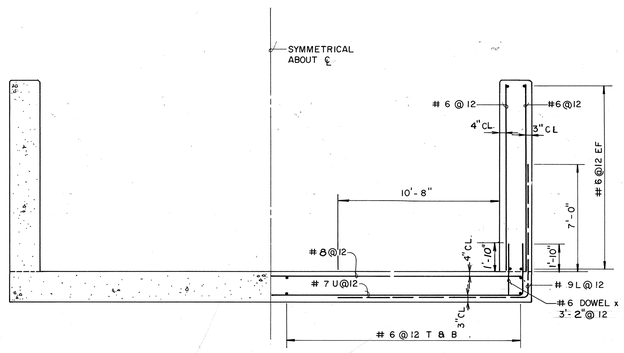

SECTION 4 (16|17)
SCALE: 1/4" = 1'-0"

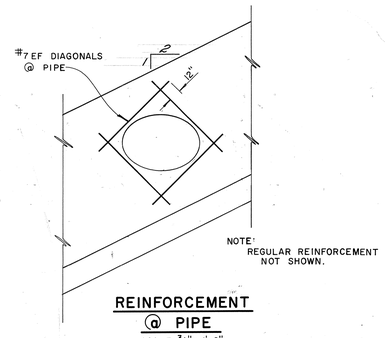

REINFORCEMENT @ PIPE
SCALE: 3/16" = 1'-0"

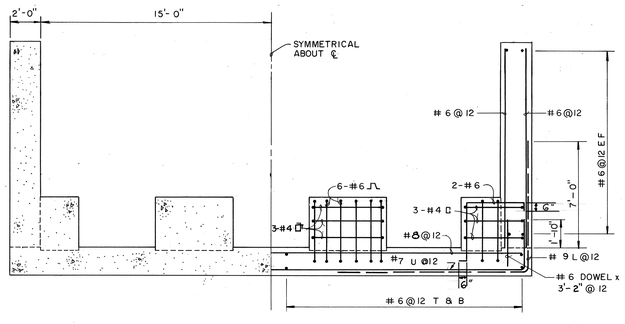

SECTION 5 (16|17)
SCALE: 1/4" = 1'-0"

GRAPHIC SCALES

3/16" = 1'-0" 0 1' 2' 4' 8' 12' 16'
1/4" = 1'-0" 0 1' 2' 4' 8' 12'
3/8" = 1'-0" 0 1' 2' 4' 6' 8'

NOTE: ALL OPERATIONS PERFORMED IN ACCOMPLISHING THIS WORK SHALL BE DONE IN ACCORDANCE WITH THE APPLICABLE PROVISIONS OF THE CORPS OF ENGINEERS MANUAL "GENERAL SAFETY REQUIREMENTS" AND THE CONTRACT SPECIFICATIONS.

SYMBOL	DESCRIPTIONS	DATE	APPROVAL

REVISIONS

US ARMY ENGINEER DISTRICT, ALBUQUERQUE
CORPS OF ENGINEERS
ALBUQUERQUE, NEW MEXICO

DESIGNED BY: JBR
DRAWN BY: RM MJH
CHECKED BY: WHB

RIO GRANDE WATERSHED — RIO GRANDE, NEW MEXICO
ALBUQUERQUE DIVERSION CHANNELS
ALBUQUERQUE, NEW MEXICO
SOUTH DIVERSION CHANNEL
PHASE II

INLET STA. 344+49.69

SUBMITTED BY: John W. McCausland
CHIEF, STRUCTURAL SECTION
DATE: APR 26 1971

DACW 47-71-B-0011
FILE NUMBER RGR-AL-0-17

PLATE 17

DRAWING OF WORK AS CONSTRUCTED

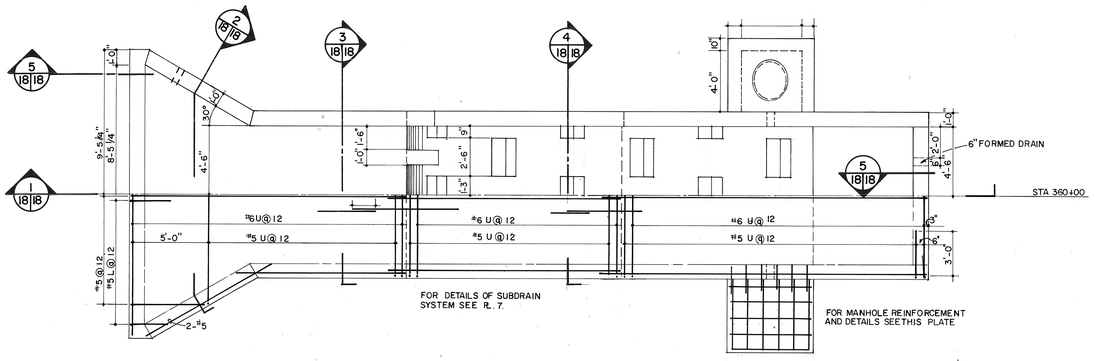

PLAN
1/4"=1'-0"

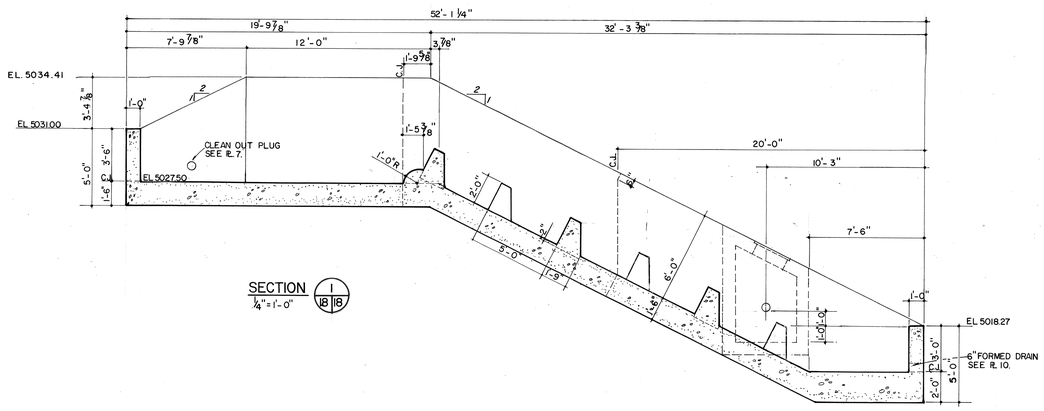

SECTION 1/18|18
1/4"=1'-0"

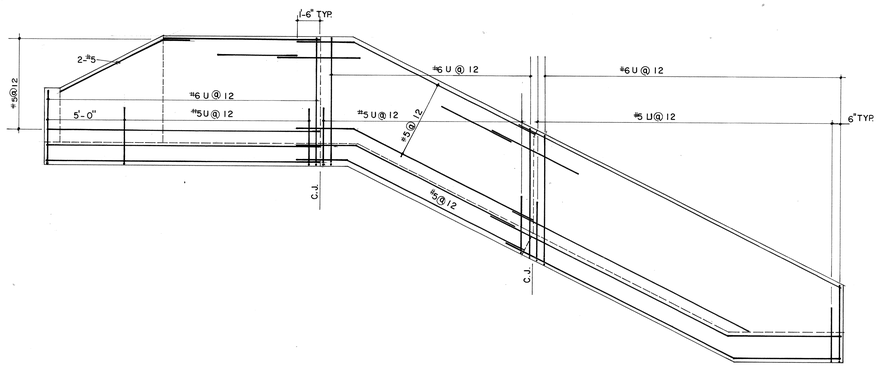

ELEVATION FAR FACE REINFORCEMENT
1/4"=1'-0"

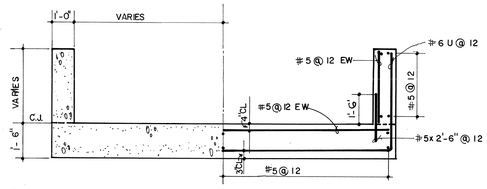

SECTION 2/18|18
3/8"=1'-0"

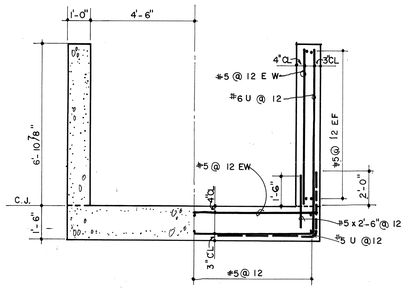

SECTION 3/18|18
3/8"=1'-0"

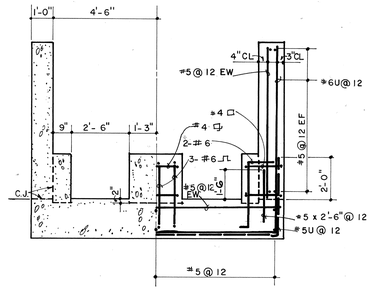

SECTION 4/18|18
3/8"=1'-0"

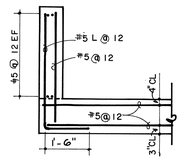

SECTION 5/18|18
3/8"=1'-0"

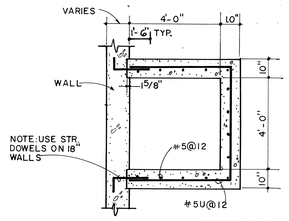

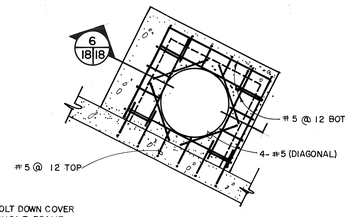

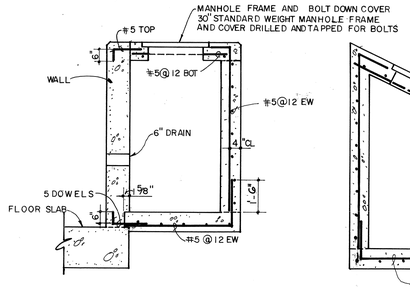

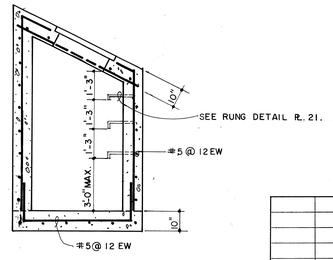

SECTION 6/18|18

TYPICAL MANHOLE DETAILS
3/8"=1'-0"

SEE GENERAL STRUCTURAL NOTES PL. 10

GRAPHIC SCALES
1/4"=1'-0"
3/8"=1'-0"

NOTE: ALL OPERATIONS PERFORMED IN ACCOMPLISHING THIS WORK SHALL BE DONE IN ACCORDANCE WITH THE APPLICABLE PROVISIONS OF THE CORPS OF ENGINEERS MANUAL "GENERAL SAFETY REQUIREMENTS" AND THE CONTRACT SPECIFICATIONS.

SYMBOL	DESCRIPTIONS	DATE	APPROVAL

REVISIONS

US ARMY ENGINEER DISTRICT, ALBUQUERQUE
CORPS OF ENGINEERS
ALBUQUERQUE, NEW MEXICO

RIO GRANDE WATERSHED — RIO GRANDE, NEW MEXICO

ALBUQUERQUE DIVERSION CHANNELS
ALBUQUERQUE, NEW MEXICO
SOUTH DIVERSION CHANNEL
PHASE II

INLET STATION 360+00

DESIGNED BY: WHB
DRAWN BY: SMK
CHECKED BY: JBR
SUBMITTED BY: John H. McCausland
DATE: APR 1973

DACW 47-71-B-0011
FILE NUMBER RGR-AL-0-18
PLATE 18

DRAWING OF WORK AS CONSTRUCTED

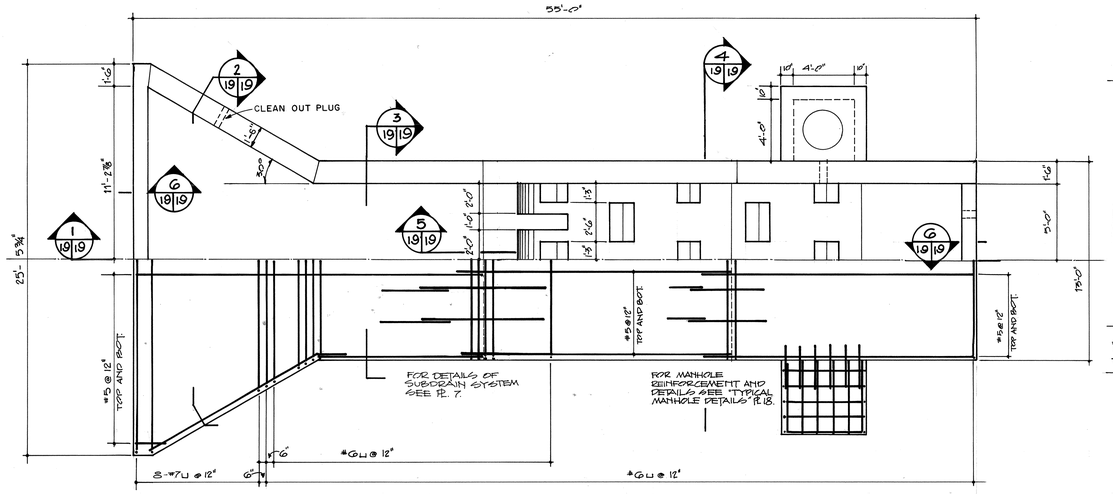

NOTE:
BOTTOM SLAB REINFORCEMENT SHOWN.

PLAN 1/4" = 1'-0"

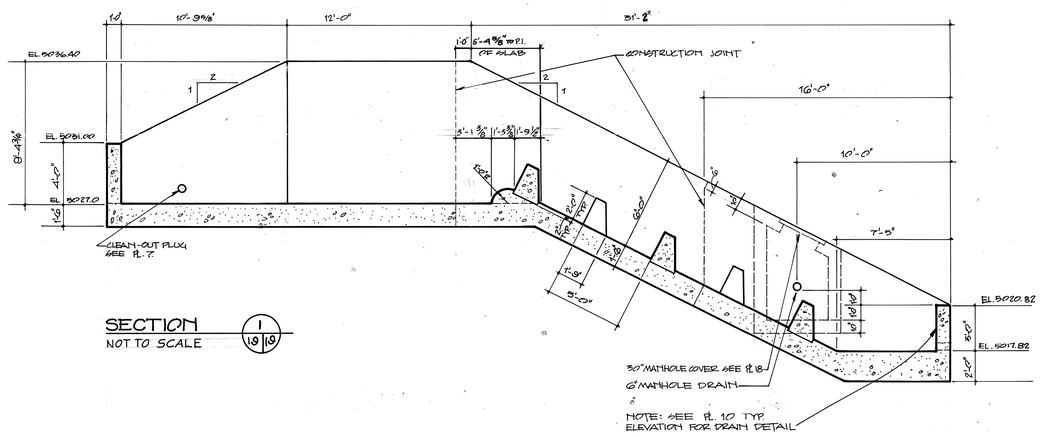

SECTION 1/19|19 NOT TO SCALE

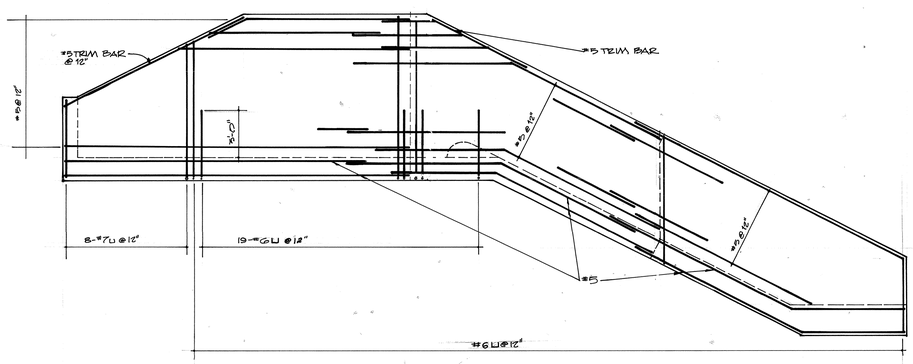

EXTERIOR ELEVATION REINFORCEMENT 1/4" = 1'-0"

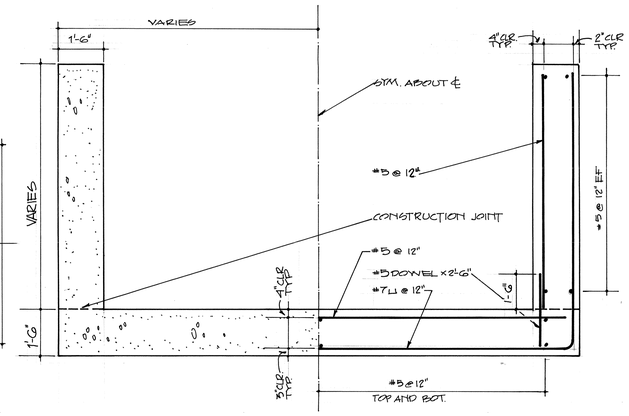

SECTION 2/19|19 1/2" = 1'-0"

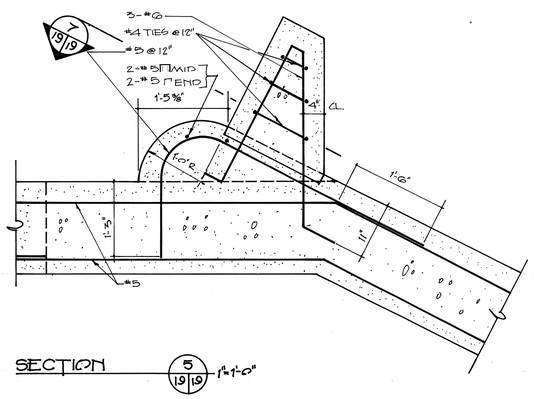

SECTION 5/19|19 1" = 1'-0"

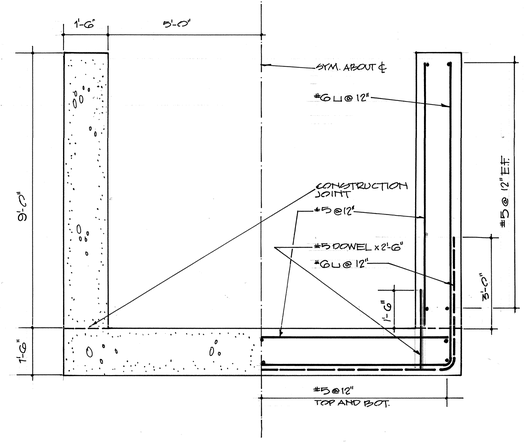

SECTION 3/19|19 1/2" = 1'-0"

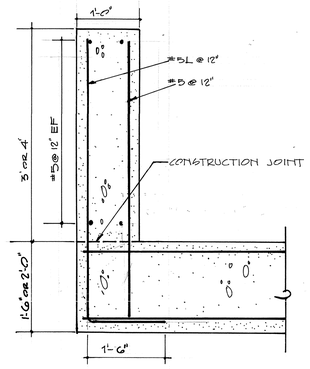

SECTION 6/19|19 1" = 1'-0"

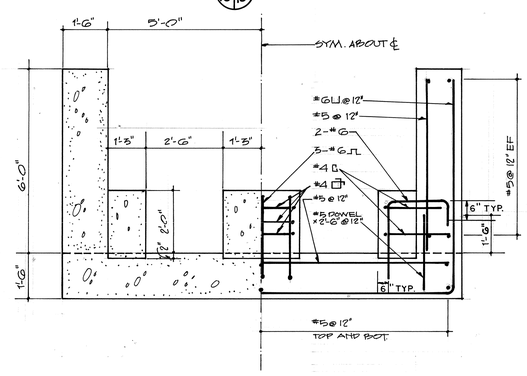

SECTION 4/19|19 1/2" = 1'-0"

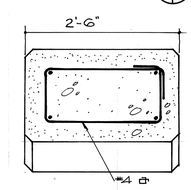

SECTION 7/19|19 1" = 1'-0"

SEE GENERAL STRUCTURAL NOTES PL. 10.

GRAPHIC SCALES

1/4" = 1'-0" 0 2' 4' 8' 12'
1/2" = 1'-0" 0 2' 4' 6'
1" = 1'-0" 0 1' 2' 3'

NOTE: ALL OPERATIONS PERFORMED IN ACCOMPLISHING THIS WORK SHALL BE DONE IN ACCORDANCE WITH THE APPLICABLE PROVISIONS OF THE CORPS OF ENGINEERS MANUAL "GENERAL SAFETY REQUIREMENTS" AND THE CONTRACT SPECIFICATIONS.

SYMBOL	DESCRIPTIONS	DATE	APPROVAL

REVISIONS

US ARMY ENGINEER DISTRICT, ALBUQUERQUE
CORPS OF ENGINEERS
ALBUQUERQUE, NEW MEXICO

RIO GRANDE WATERSHED — RIO GRANDE, NEW MEXICO

ALBUQUERQUE DIVERSION CHANNEL
ALBUQUERQUE, NEW MEXICO

SOUTH DIVERSION CHANNEL
PHASE II
INLET STATION 393+00

DESIGNED BY: WHB
DRAWN BY: SMK
CHECKED BY: J.B.R.
SUBMITTED BY: John H. M. Crawford
DATE: APR 26 1971

DACW 47-71-B-0011
FILE NUMBER RGR-AL-0-19
PLATE 19

DRAWING OF WORK AS CONSTRUCTED

FILE COPY - RETURN TO LIBRARY

NOTE:
1st LAYER IS LAYER OF STEEL CLOSEST TO OUTSIDE SURFACE.
2nd LAYER IS ABOVE OR INSIDE 1st LAYER. SEE SECTIONS ON R. 23.

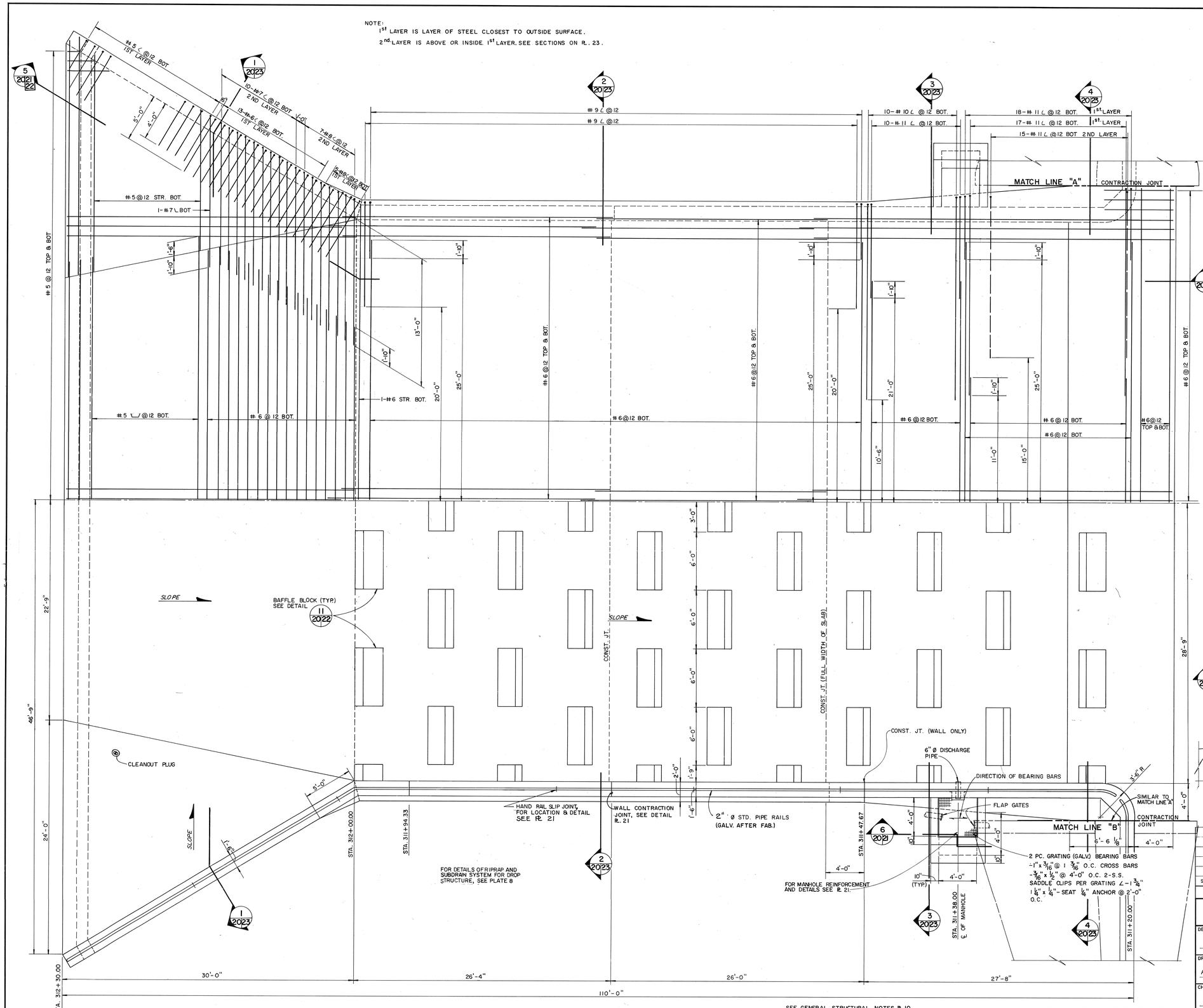

CHUTE INLET-PLAN

SCALE: 1/4"=1'-0"

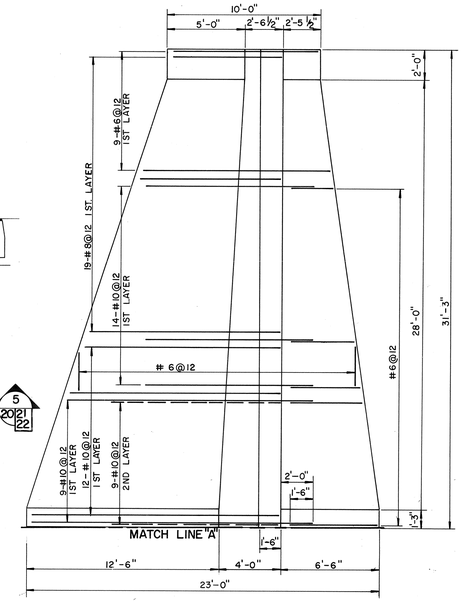

TOP REINFORCEMENT

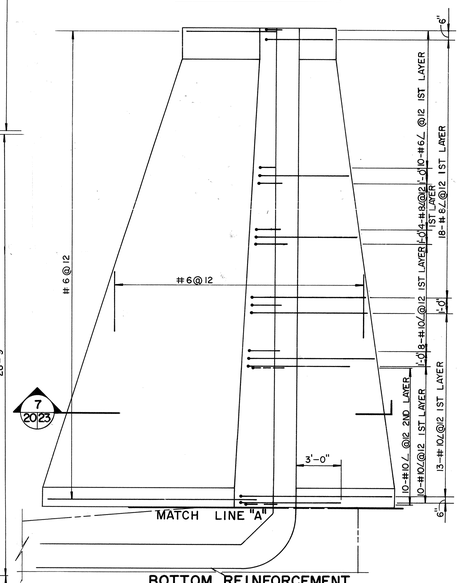

BOTTOM REINFORCEMENT

PARTIAL PLAN-WINGWALL

SCALE: 1/4"=1'-0"

SYMBOL	DESCRIPTIONS	DATE	APPROVAL

REVISIONS

US ARMY ENGINEER DISTRICT, ALBUQUERQUE
CORPS OF ENGINEERS
ALBUQUERQUE, NEW MEXICO

DESIGNED BY: JBR
DRAWN BY: PM MJH
CHECKED BY: WHB

RIO GRANDE WATERSHED — RIO GRANDE, NEW MEXICO
ALBUQUERQUE DIVERSION CHANNELS
ALBUQUERQUE, NEW MEXICO
SOUTH DIVERSION CHANNEL
PHASE II

DROP STRUCTURE STA. 312 + 00

SUBMITTED BY: John W. McCausland, CHIEF, STRUCTURAL SECTION
DATE: APR 1 1968

DACW 47-71-B-0011
FILE NUMBER RGR-AL-0-20
PLATE 20

GRAPHIC SCALE 1/4"=1'-0" 0 1' 2' 4' 8' 12'

NOTE: ALL OPERATIONS PERFORMED IN ACCOMPLISHING THIS WORK SHALL BE DONE IN ACCORDANCE WITH THE APPLICABLE PROVISIONS OF THE CORPS OF ENGINEERS MANUAL "GENERAL SAFETY REQUIREMENTS" AND THE CONTRACT SPECIFICATIONS.

DRAWING OF WORK AS CONSTRUCTED

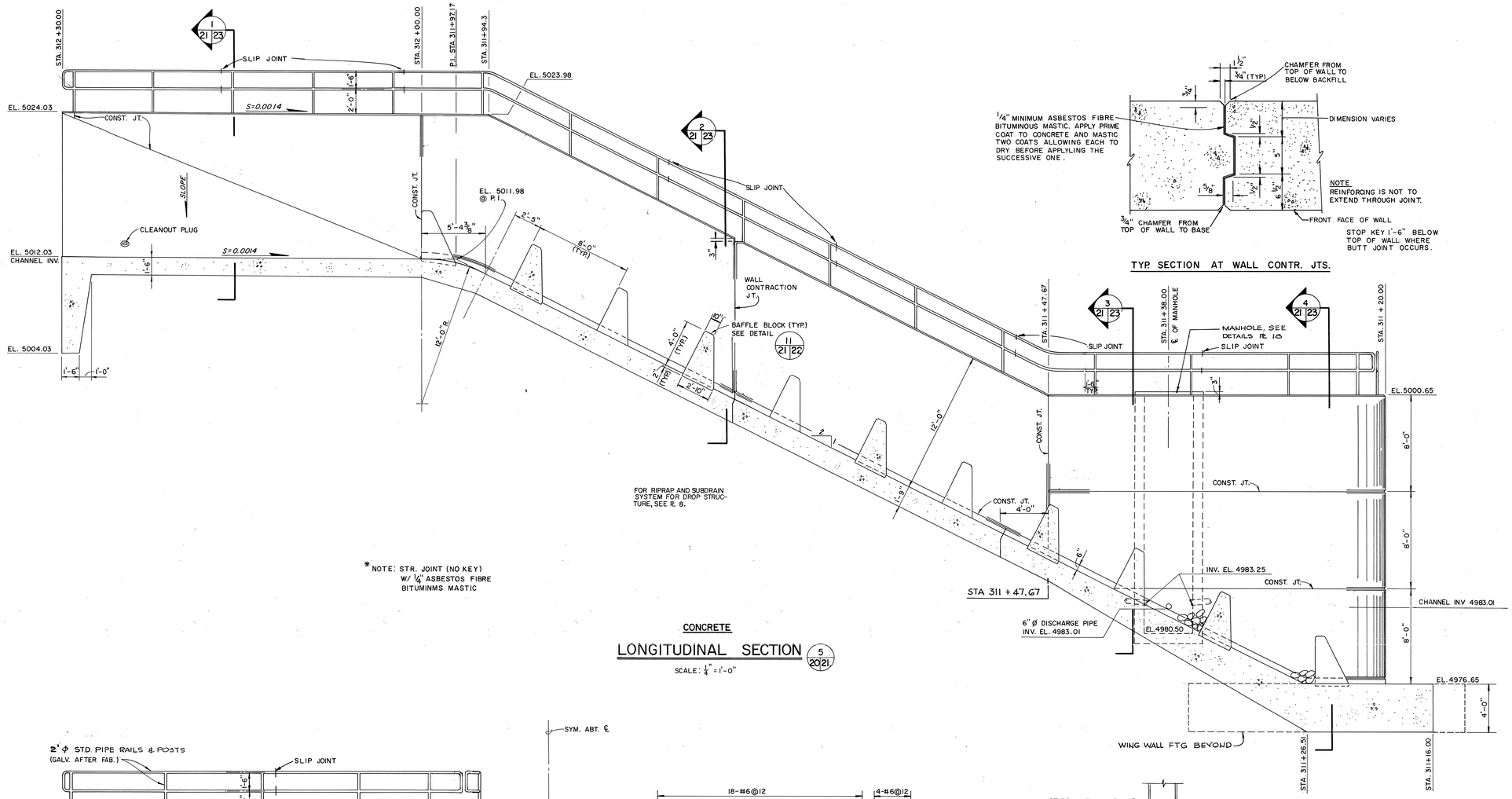

* NOTE: STR. JOINT (NO KEY) W/ 1/4" ASBESTOS FIBRE BITUMINMS MASTIC

CONCRETE

LONGITUDINAL SECTION (5/21)

SCALE: 1/4" = 1'-0"

TYP. SECTION AT WALL CONTR. JTS.

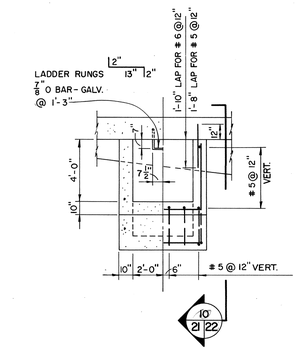

PLAN

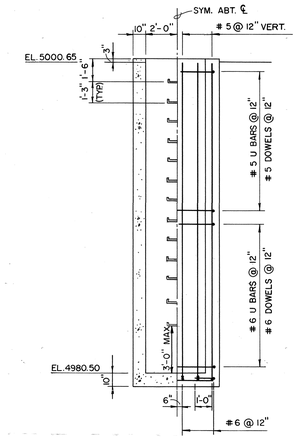

ELEVATION

SECTION (6/20 21)

SCALE: 1/4" = 1'-0"

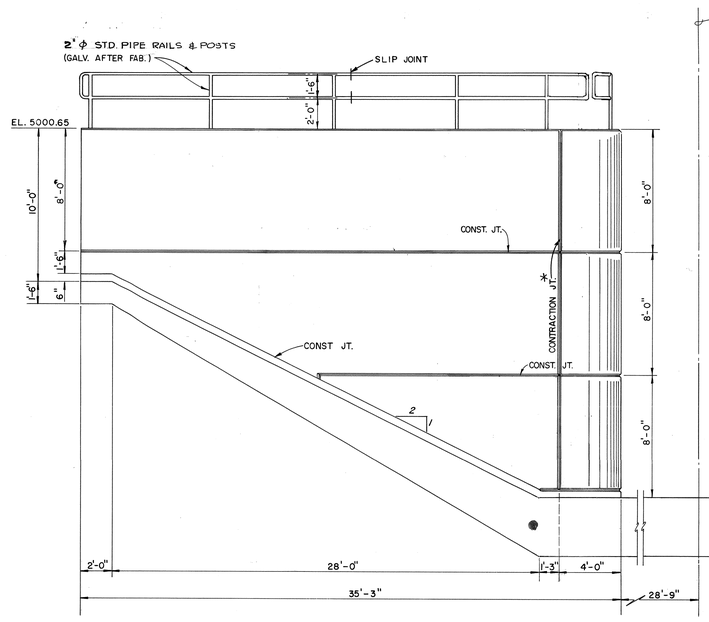

ELEVATION OF WINGWALLS

SCALE: 1/4" = 1'-0"

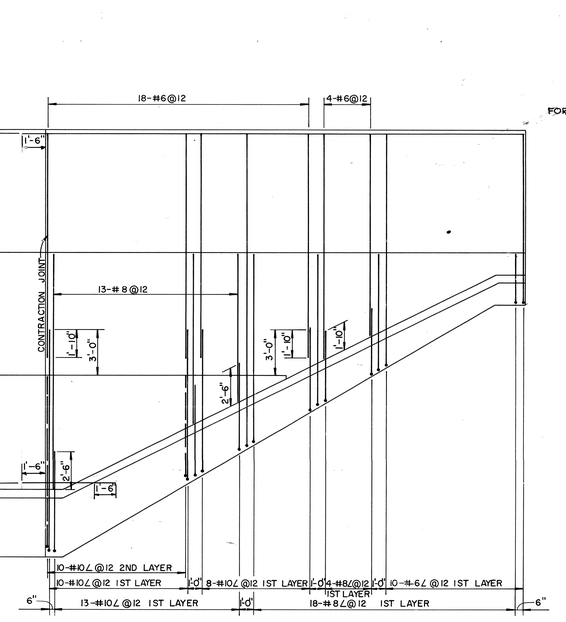

REINFORCEMENT EARTH FACE

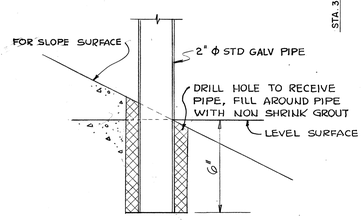

HAND RAIL POST ANCHOR DETAIL

NOT TO SCALE

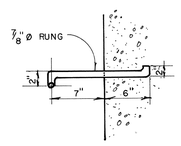

RUNG DETAIL

SCALE: 1 1/2" = 1'-0"

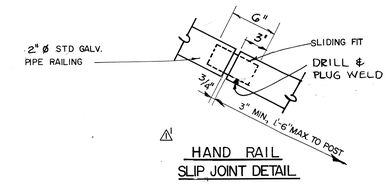

HAND RAIL SLIP JOINT DETAIL

NOT TO SCALE

SYMBOL	DESCRIPTIONS	DATE	APPROVAL
1	CHANGED GUARD RAIL TERMINOLOGY TO HAND RAIL	14 MAY 71	WMJ

REVISIONS

US ARMY ENGINEER DISTRICT, ALBUQUERQUE
CORPS OF ENGINEERS
ALBUQUERQUE, NEW MEXICO

RIO GRANDE WATERSHED — RIO GRANDE, NEW MEXICO
ALBUQUERQUE DIVERSION CHANNELS
ALBUQUERQUE, NEW MEXICO
SOUTH DIVERSION CHANNEL
PHASE II

DROP STRUCTURE STA. 312 + 00

DESIGNED BY: JBR
DRAWN BY: JAF
CHECKED BY: WHR
SUBMITTED BY: John H. McCausland, CHIEF, STRUCTURAL SECTION
DATE: APR 26 1971

DACW 47-71-B-0011
FILE NUMBER RGR-AL-0-21.1
PLATE 21

GRAPHIC SCALE 1/4" = 1'-0" (0, 2', 4', 8', 12')

NOTE: ALL OPERATIONS PERFORMED IN ACCOMPLISHING THIS WORK SHALL BE DONE IN ACCORDANCE WITH THE APPLICABLE PROVISIONS OF THE CORPS OF ENGINEERS MANUAL "GENERAL SAFETY REQUIREMENTS" AND THE CONTRACT SPECIFICATIONS.

DRAWING OF WORK AS CONSTRUCTED

FILE COPY - RETURN TO LIBRARY

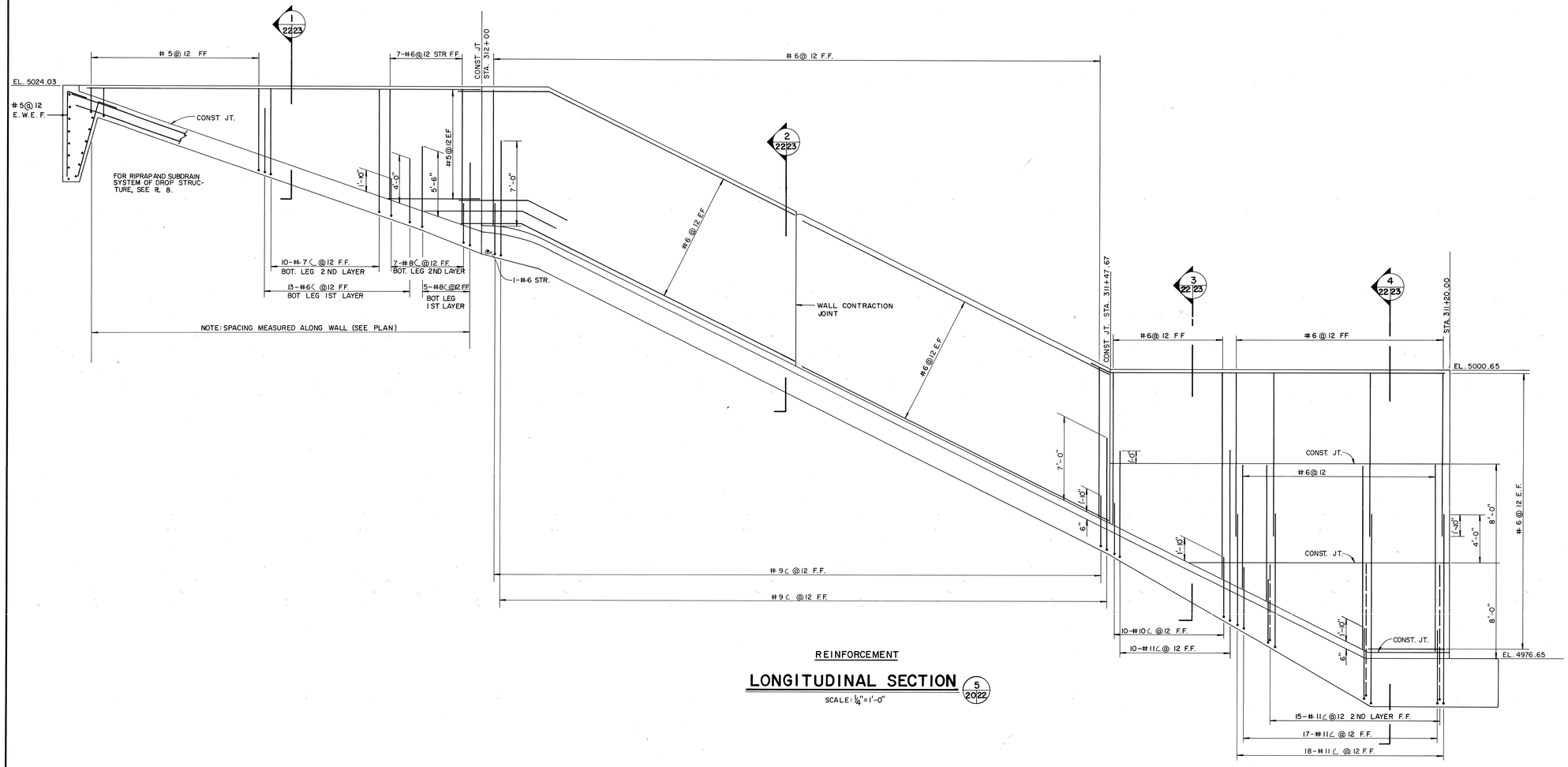

REINFORCEMENT

LONGITUDINAL SECTION (5 / 20 22)

SCALE: 1/4" = 1'-0"

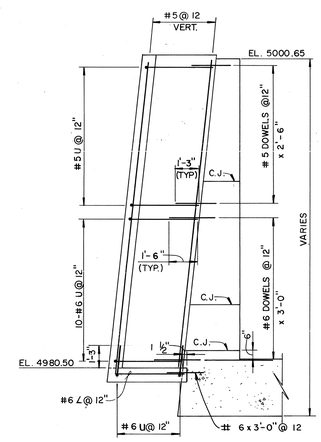

SECTION (10 / 21 22)

SCALE: 1/4" = 1'-0"

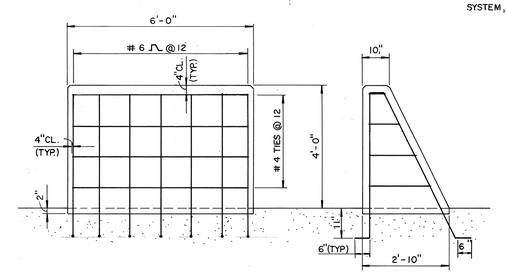

BAFFLE BLOCK DETAIL (11 / 20 21 22)

SCALE: 1/2" = 1'-0"

GRAPHIC SCALES

1/4" = 1'-0" 0 1' 2' 4' 8' 12'

1/2" = 1'-0" 0 1' 2' 4' 6'

NOTE: ALL OPERATIONS PERFORMED IN ACCOMPLISHING THIS WORK SHALL BE DONE IN ACCORDANCE WITH THE APPLICABLE PROVISIONS OF THE CORPS OF ENGINEERS MANUAL "GENERAL SAFETY REQUIREMENTS" AND THE CONTRACT SPECIFICATIONS.

SYMBOL	DESCRIPTIONS	DATE	APPROVAL

REVISIONS

US ARMY ENGINEER DISTRICT, ALBUQUERQUE
CORPS OF ENGINEERS
ALBUQUERQUE, NEW MEXICO

DESIGNED BY: JBR
DRAWN BY: PJM
CHECKED BY: W.H.B.

RIO GRANDE WATERSHED — RIO GRANDE, NEW MEXICO
ALBUQUERQUE DIVERSION CHANNELS
ALBUQUERQUE, NEW MEXICO
SOUTH DIVERSION CHANNEL
PHASE II

DROP STRUCTURE STA. 312 + 00

SUBMITTED BY: John H. McCausland
CHIEF, STRUCTURAL SECTION
DATE: APR 26 1971

DACW 47-71-B-0011
FILE NUMBER
RGR-AL-0-22

PLATE 22

DRAWING OF WORK AS CONSTRUCTED

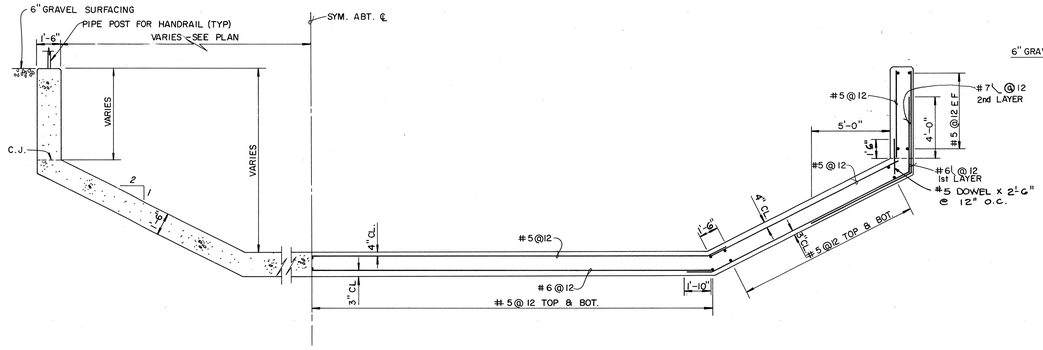

SECTION 1 (20 21 22 23)
SCALE: 1/4" = 1'-0"

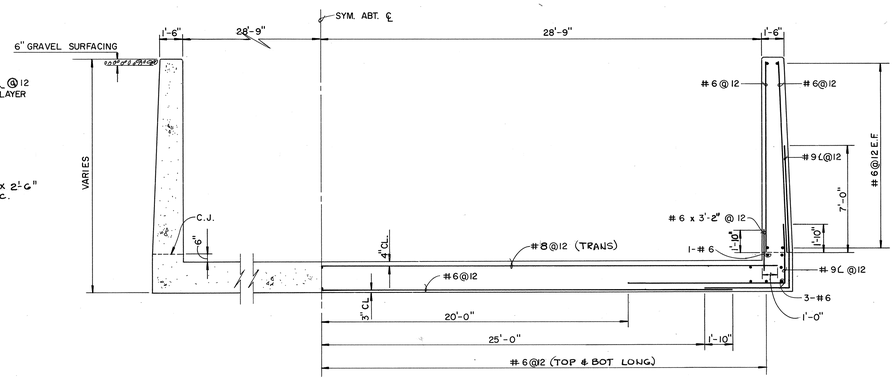

SECTION 2 (20 21 22 23)
SCALE: 1/4" = 1'-0"

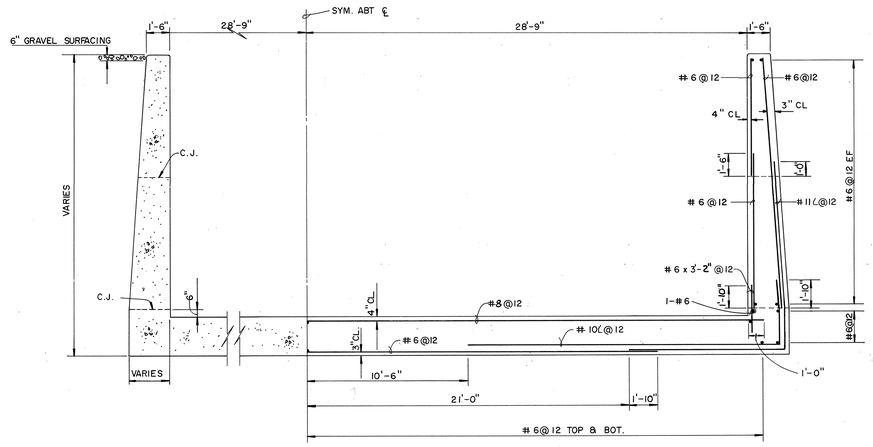

SECTION 3 (20 21 22 23)
SCALE: 1/4" = 1'-0"

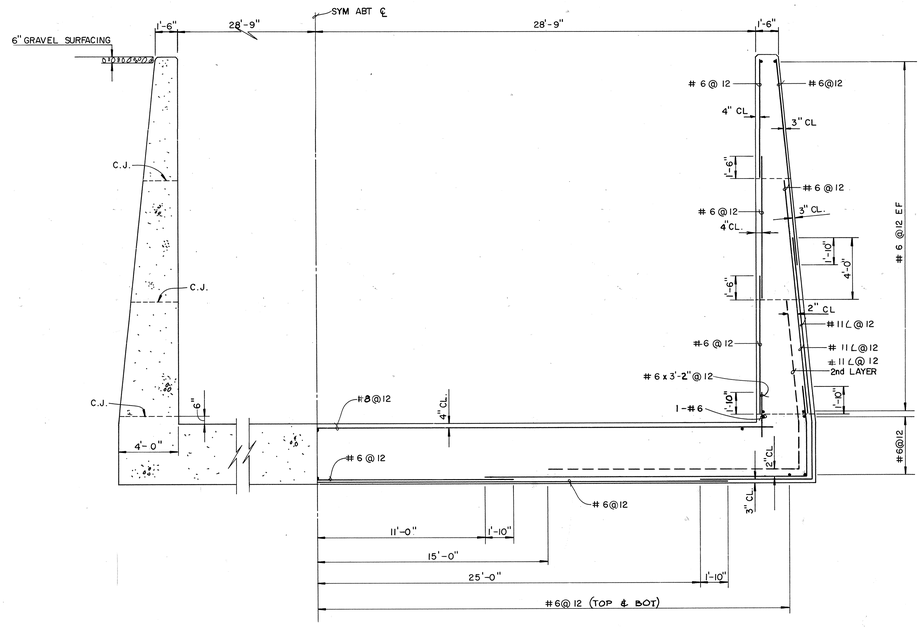

SECTION 4 (20 21 22 23)
SCALE: 1/4" = 1'-0"

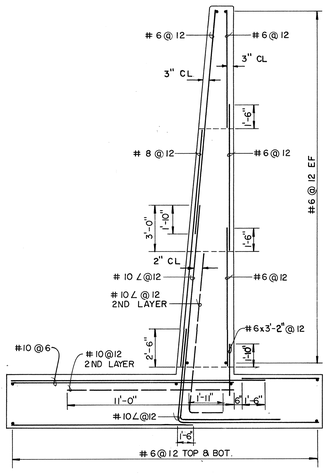

SECTION 7 (20 23)
SCALE: 1/4" = 1'-0"

GRAPHIC SCALE
1/4" = 1'-0" 0 1' 2' 4' 8' 12'

NOTE: ALL OPERATIONS PERFORMED IN ACCOMPLISHING THIS WORK SHALL BE DONE IN ACCORDANCE WITH THE APPLICABLE PROVISIONS OF THE CORPS OF ENGINEERS MANUAL "GENERAL SAFETY REQUIREMENTS" AND THE CONTRACT SPECIFICATIONS.

SYMBOL	DESCRIPTIONS	DATE	APPROVAL

REVISIONS

US ARMY ENGINEER DISTRICT, ALBUQUERQUE
CORPS OF ENGINEERS
ALBUQUERQUE, NEW MEXICO

RIO GRANDE WATERSHED — RIO GRANDE, NEW MEXICO
ALBUQUERQUE DIVERSION CHANNELS
ALBUQUERQUE, NEW MEXICO
SOUTH DIVERSION CHANNEL
PHASE II

DROP STRUCTURE STA. 312 + 00

DESIGNED BY: CJL
DRAWN BY: FM MJH
CHECKED BY: WHB
SUBMITTED BY: CHIEF, STRUCTURAL SECTION
DATE: APR 26 1971

DACW 47-71-B-0011
FILE NUMBER
RGR-AL-0-23

PLATE 23

DRAWING OF WORK AS CONSTRUCTED

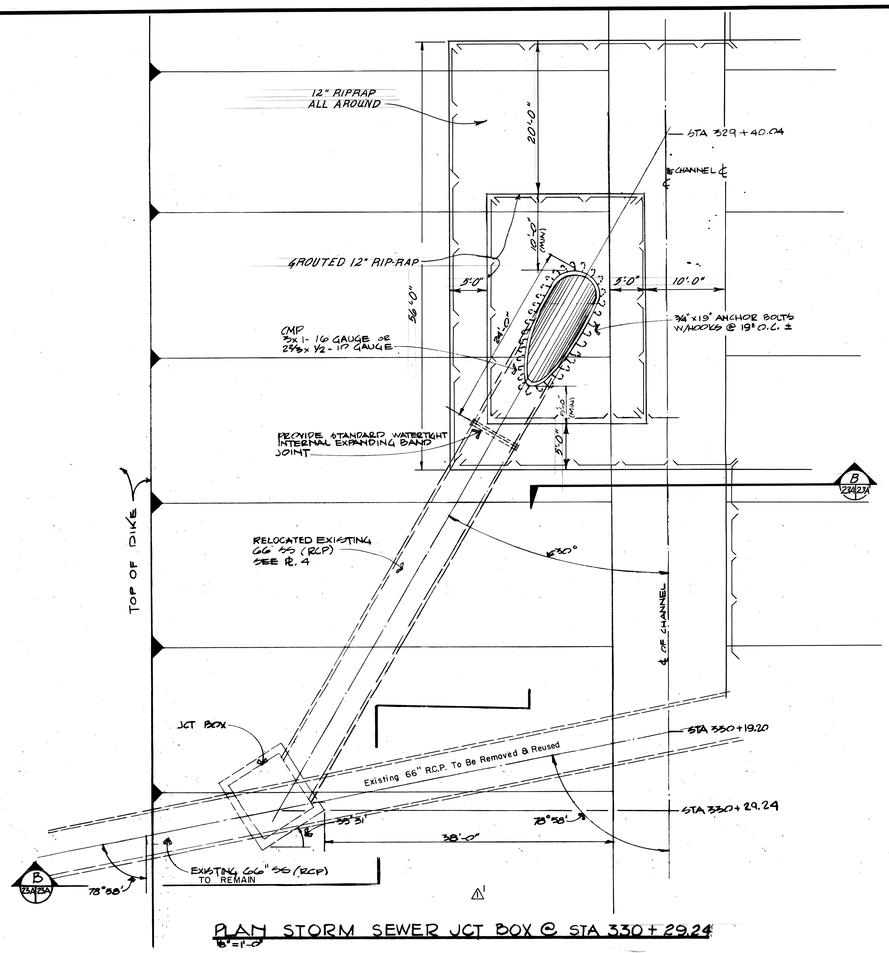

PLAN STORM SEWER JCT BOX @ STA 330+29.24
1/8"=1'-0"

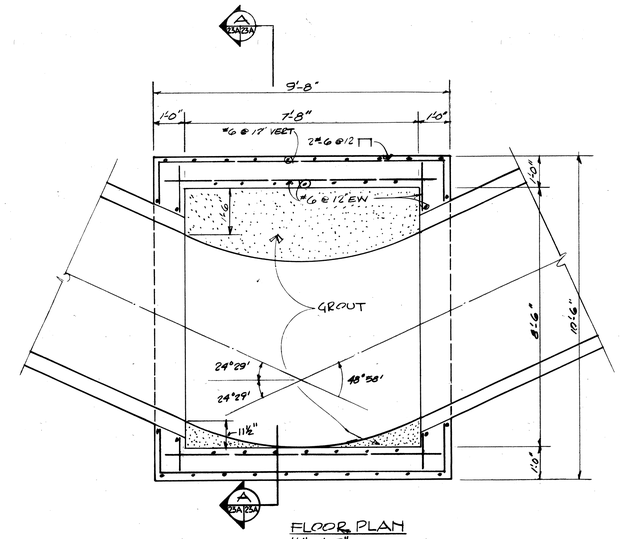

FLOOR PLAN
1/2"=1'-0"

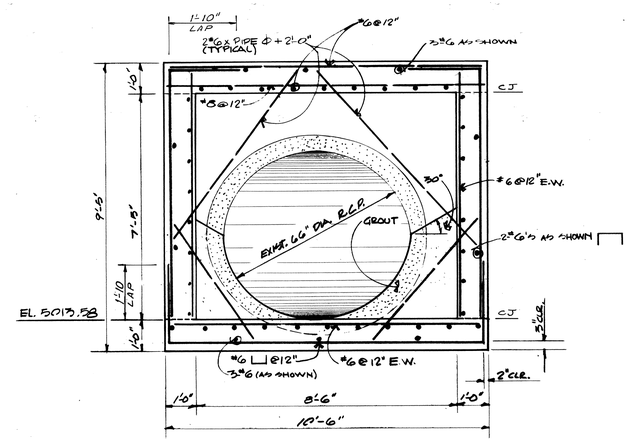

SECTION "A"-A
1/2"=1'-0"

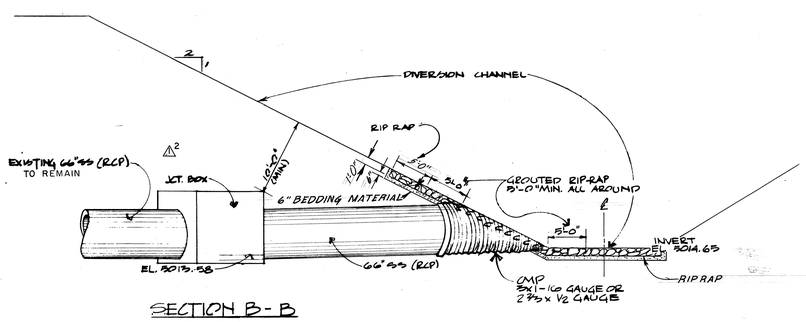

SECTION B-B
NOT TO SCALE

NOTE: ALL OPERATIONS PERFORMED IN ACCOMPLISHING THIS WORK SHALL BE DONE IN ACCORDANCE WITH THE APPLICABLE PROVISIONS OF THE CORPS OF ENGINEERS MANUAL "GENERAL SAFETY REQUIREMENTS" AND THE CONTRACT SPECIFICATIONS.

SYMBOL	DESCRIPTION	DATE	APPROVAL
2	REVISED DETAIL	14 MAY 71	W.M.J.

REVISIONS

U. S. ARMY ENGINEER DISTRICT, ALBUQUERQUE
CORPS OF ENGINEERS
ALBUQUERQUE, NEW MEXICO

RIO GRANDE WATERSHED — RIO GRANDE, NEW MEXICO
ALBUQUERQUE DIVERSION CHANNELS
ALBUQUERQUE, NEW MEXICO
SOUTH DIVERSION CHANNEL
PHASE II

STORM SEWER JUNCTION BOX STA. 330 + 29.24

DESIGNED BY: CEA & EO
DRAWN BY: SK
CHECKED BY: J.M.S.
SUBMITTED BY: Gene D. Goodwin, PROJECT ENGINEER
DATE: APR 26 1971

DACW 47-71-B-0011
FILE NUMBER RGR-AL-0-23A.1
PLATE 23A

VALUE ENGINEERING PROPOSALS MEAN HIGHER PROFITS

DRAWING OF WORK AS CONSTRUCTED